CITY OF MIDLAND, TEXAS
AGENDA FOR CITY COUNCIL MEETING
September 24, 2024 - 10:00 AM
300 North Loraine
Midland, Texas
Council Chamber - City Hall

A quorum of the City Council intends to be physically present at the aforementioned location.

The City Council may discuss, consider, and take action on any item listed on this agenda.

OPENING ITEMS

1. Invocation – Pastor Matt Koehler, Greenwood Baptist Church

2. Pledge of Allegiance

PRESENTATIONS

3. Presentation of special events, organizations, individuals, periods of time, or reports, including, but not limited to:

   3a. Presentation of Proclamation for “Bryce Hoppel Day”.

   3b. Presentation of Proclamation for “Hunger Action Month”.

   3c. Presentation of Proclamation for “Midland Community Healthcare Services Day”.

CONSENT AGENDA

4. MOTION APPROVING THE FOLLOWING MINUTES:

   4a. SPECIAL SESSION OF SEPTEMBER 5, 2024

   4b. REGULAR SESSION OF SEPTEMBER 10, 2024

   4c. REGULAR SESSION OF SEPTEMBER 17, 2024

5. 104-2024 – MOTION APPROPRIATING THE SUM OF $247,931.68 FROM THE HOTEL MOTEL UNAPPROPRIATED FUND BALANCE FOR THE DOWNTOWN CHRISTMAS CELEBRATION OF LIGHTS **(DISTRICT 3) (FINANCE) (QUALITY OF LIFE AND PLACE)**

6. 2024-148 – RESOLUTION AMENDING THE AUTHORIZED REPRESENTATIVES OF THE CITY OF MIDLAND, TEXAS, REGARDING INVESTMENTS OF PUBLIC FUNDS; ADDING VIVIAN IRWIN, FINANCE ADMINISTRATION AND TREASURY MANAGER, AND CRYSTAL GARCIA, COMPTROLLER, AS AUTHORIZED REPRESENTATIVES OF THE CITY OF MIDLAND ON THE TEXAS LOCAL GOVERNMENT INVESTMENT POOL, TEXPOOL/TEXPOOL PRIME; AND CHRISTY WEAKLAND, VIVIAN IRWIN, AND CRYSTAL GARCIA SHALL BE AUTHORIZED REPRESENTATIVES OF THE CITY OF MIDLAND **(DISTRICT: NONE) (FINANCE) (PROVIDE SOUND GOVERNANCE & FISCAL MANAGEMENT)**

7. 105-2024 – MOTION AUTHORIZING THE EXECUTION OF CHANGE ORDER NUMBER 3 WITH REECE ALBERT, INC. REGARDING THE STATE HIGHWAY 158 AND SINCLAIR AVENUE INTERSECTION IMPROVEMENT PROJECT FOR THE ENGINEERING SERVICES DEPARTMENT; SAID CHANGE ORDER TO BE IN THE AMOUNT OF $898,248.46 AND TO PROVIDE FOR MODIFICATIONS REQUIRED TO ALIGN WITH TXDOT PAVEMENT DESIGN STANDARDS, IMPLEMENTATION OF TRAFFIC CONTROL MEASURES, AND MATERIAL OVERRUNS; AND TRANSFERRING THE SUM OF $11,416.53 FROM THE GENERAL FUND 2024 OPERATING BUDGET TO THE SINCLAIR AVENUE DRAINAGE PROJECT (900473-005) **(DISTRICT 4) (GENERAL SERVICES) (STRENGTHEN AND SUSTAIN OUR INFRASTRUCTURE)**

8. 2024-149 – RESOLUTION AUTHORIZING THE EXECUTION OF A FOURTH AMENDMENT TO THAT CERTAIN MASTER SERVICES AND PURCHASING AGREEMENT WITH AXON ENTERPRISES, INC., DATED SEPTEMBER 29, 2021, AS AMENDED, FOR BODY-WORN CAMERA SYSTEMS AND RELATED SERVICES FOR THE POLICE DEPARTMENT; AND AUTHORIZING PAYMENT FOR THE WORK AND SERVICES RENDERED PURSUANT TO SAID FOURTH AMENDMENT **(DISTRICT: NONE) (GENERAL SERVICES) (SET THE STANDARD FOR A SAFE AND SECURE CITY)**

9. 2024-150 – RESOLUTION AWARDING A CONTRACT FOR THE PURCHASE AND INSTALLATION OF FOUR (4) IN-GROUND VEHICLE LIFTS AND ONE (1) PLATFORM VEHICLE LIFT TO DAVID COWAN EQUIPMENT FOR A COST OF $169,790.00; AND APPROVING $16,979.00 FOR CONTINGENCIES **(DISTRICT 2) (GENERAL SERVICES) (PROVIDE SOUND GOVERNANCE & FISCAL MANAGEMENT)**

10. 2024-151 – RESOLUTION AUTHORIZING THE SOLE-SOURCE PURCHASE OF A ONE-YEAR MAINTENANCE AND LICENSE RENEWAL FOR THE UTILITY BILLING MANAGEMENT SYSTEM FROM SMARTWORKS, A DIVISION OF N. HARRIS COMPUTER CORPORATION FOR A TOTAL COST OF $108,855.52 **(DISTRICT: NONE) (GENERAL SERVICES) (PROVIDE SOUND GOVERNANCE & FISCAL MANAGEMENT)**

11. 2024-152 – RESOLUTION AUTHORIZING THE PURCHASE OF AN ESTIMATED ANNUAL SUPPLY OF CHEMICALS NEEDED FOR THE TREATMENT OF DRINKING WATER FOR FISCAL YEAR 2025 FROM MULTIPLE BIDDERS, FOR A TOTAL COST OF

$3,591,792.80 **(DISTRICT: ALL) (GENERAL SERVICES) (QUALITY OF LIFE AND PLACE)**

12. 2024-153 – RESOLUTION AWARDING A CONTRACT FOR THE PURCHASE AND INSTALLATION OF AN HVAC SYSTEM AT THE MARTIN LUTHER KING JR. COMMUNITY CENTER TO FIRST SERVICE AIR CONDITIONING, INC., FOR A COST OF $106,022.00; AND APPROVING $10,602.00 FOR CONTINGENCIES **(DISTRICT 2) (GENERAL SERVICES) (STRENGTHEN AND SUSTAIN OUR INFRASTRUCTURE)**

13. 2024-154 – RESOLUTION APPROVING A CONTRACT WITH DECOR IQ, LLC, THROUGH BUYBOARD, FOR SERVICES RELATED TO THE INSTALLATION OF EVENT LIGHTING AND DECORATIVE DISPLAYS IN DOWNTOWN MIDLAND FOR A TOTAL COST OF $1,622,706.03 **(DISTRICT 2) (GENERAL SERVICES) (STRENGTHEN AND SUSTAIN OUR INFRASTRUCTURE)**

14. 2024-155 – RESOLUTION AUTHORIZING THE EXECUTION OF A CONTRACT WITH JONES BROS. DIRT & PAVING CONTRACTORS, INC., IN THE AMOUNT OF $2,272,588.85 FOR THE RECONSTRUCT RUNWAY 16R BLAST PAD, REMOVE RUNWAY 34L CONCRETE BLAST PAD, AND ADD ASPHALT SHOULDERS TO RUNWAY 10 BLAST PAD PROJECT AT THE MIDLAND INTERNATIONAL AIR & SPACE PORT; AND APPROPRIATING AND TRANSFERRING FUNDS FOR SAID PROJECT **(DISTRICT 4) (AIRPORTS) (TRANSPARENT & CONSISTENT COMMUNICATION)**

15. 106-2024 – MOTION AUTHORIZING THE APPROPRIATION AND TRANSFER OF FUNDING IN THE AMOUNT OF $50,000.00 FROM THE AIRPORT PFC FUND BALANCE TO THE PASSENGER FACILITY CHARGE APPLICATION & AMENDMENT PROJECT (900346); SAID FUNDS SHALL BE UTILIZED TO PROVIDE FOR CERTAIN AUDITING AND ADMINISTRATIVE COSTS ASSOCIATED WITH SAID PROJECT **(DISTRICT 4) (AIRPORTS) (TRANSPARENT & CONSISTENT COMMUNICATION)**

16. 2024-156 – RESOLUTION APPROVING AN ECONOMIC DEVELOPMENT AGREEMENT BETWEEN THE MIDLAND DEVELOPMENT CORPORATION AND STARFIGHTERS SPACE TEXAS, LLC, AS AUTHORIZED BY CHAPTER 501 OF THE TEXAS LOCAL GOVERNMENT CODE **(DISTRICT 4) (CITY MANAGER) (STRONG ECONOMY WITH MORE QUALITY JOBS)**

17. 107-2024 – MOTION APPROVING A CONTRACTOR AGREEMENT BETWEEN THE MIDLAND DEVELOPMENT CORPORATION AND KBR, INC., IN THE AMOUNT OF $15,000.00 FOR SERVICES RELATED TO COMMERCIAL SPACEPORT DEVELOPMENT **(DISTRICT: NONE) (CITY MANAGER) (STRONG ECONOMY WITH MORE QUALITY JOBS)**

18. 108-2024 – MOTION APPROVING A PURCHASE AND SALE AGREEMENT BETWEEN THE MIDLAND DEVELOPMENT CORPORATION AND HENDERCO, LLC, FOR THE MIDLAND DEVELOPMENT CORPORATION'S PURCHASE OF CERTAIN REAL

PROPERTY DESCRIBED AS A 6.484-ACRE TRACT OUT OF BLOCK 1, LOT 2, PARKWAY SOUTH ADDITION, SECTION 3, CITY OF MIDLAND, MIDLAND COUNTY, TEXAS **(DISTRICT 2) (CITY MANAGER) (STRONG ECONOMY WITH MORE QUALITY JOBS)**

19. 109-2024 – MOTION APPROVING, WITH STAFF'S RECOMMENDED CONDITIONS, A PRELIMINARY PLAT OF MOCKINGBIRD RIDGE, BEING A PLAT OF A 302.39-ACRE TRACT OF LAND OUT OF SECTION 18, BLOCK 38, T-1-S, T&P RR CO. SURVEY, CITY AND COUNTY OF MIDLAND, TEXAS (GENERALLY LOCATED SOUTHEAST OF THE INTERSECTION OF FAIRGROUNDS ROAD AND ARAPAHOE ROAD) **(DISTRICT 1) (DEVELOPMENT SERVICES) (QUALITY OF LIFE AND PLACE)**

20. 110-2024 – MOTION AUTHORIZING THE EXECUTION OF AN INTERLOCAL AGREEMENT WITH MIDLAND COUNTY UNDER WHICH THE CITY WILL RECEIVE FUNDS IN THE AMOUNT OF $588,900.00 FOR THE CONSTRUCTION OF A TRAFFIC SIGNAL AT THE INTERSECTION OF STATE HIGHWAY 158 AND SINCLAIR AVENUE IN EXCHANGE FOR ANNEXING AN AREA THAT INCLUDES THE INTERSECTION OF COUNTY ROAD 120 AND ANTELOPE TRAIL AND MAINTAINING THE TRAFFIC SIGNAL AT THAT INTERSECTION **(DISTRICT 4) (ENGINEERING SERVICES) (STRENGTHEN AND SUSTAIN OUR INFRASTRUCTURE)**

21. 2024-157 – RESOLUTION ACCEPTING A FISCAL YEAR 2024 GRANT AWARD FROM THE SOUTHWEST BORDER HIGH INTENSITY DRUG TRAFFICKING AREAS PROGRAM IN THE AMOUNT OF $196,094.00 SAID GRANT SHALL BE USED TO ENHANCE AND COORDINATE DRUG CONTROL EFFORTS AMONG FEDERAL, STATE, AND LOCAL LAW ENFORCEMENT AGENCIES; AND APPROPRIATING SAID GRANT FUNDS **(DISTRICT: ALL) (POLICE) (SET THE STANDARD FOR A SAFE AND SECURE CITY)**

SECOND READINGS

22. 10563 – AN ORDINANCE GRANTING A SPECIAL EXCEPTION FOR A 1.51-ACRE TRACT OF LAND OUT OF THE SOUTHEAST QUARTER OF SECTION 7, BLOCK X, H.P. HILLIARD SURVEY, CITY AND COUNTY OF MIDLAND, TEXAS (GENERALLY LOCATED ON THE NORTH SIDE OF MOCKINGBIRD LANE, APPROXIMATELY 800 FEET WEST OF NORTH MIDLAND DRIVE), BY PERMITTING A REDUCED MINIMUM LOT AREA; CONTAINING A CUMULATIVE CLAUSE; CONTAINING A SAVINGS AND SEVERABILITY CLAUSE; PROVIDING FOR A MAXIMUM PENALTY OR FINE OF TWO THOUSAND DOLLARS ($2,000.00); ORDERING RECORDATION BY THE CITY SECRETARY IN THE DEED RECORDS OF MIDLAND COUNTY, TEXAS; AND ORDERING PUBLICATION (FIRST READING HELD SEPTEMBER 10, 2024) **(DISTRICT 4) (DEVELOPMENT SERVICES) (QUALITY OF LIFE AND PLACE)**

23. 10564 – AN ORDINANCE AMENDING THE ZONING DISTRICT MAP OF THE CITY OF MIDLAND TO REZONE A 302.39-ACRE TRACT OF LAND OUT OF SECTION 18, BLOCK 38, T-1-S, T&P RR CO. SURVEY, CITY AND COUNTY OF MIDLAND, TEXAS,

FROM SF-1, SINGLE-FAMILY DWELLING DISTRICT, IN PART, SF-2, SINGLE-FAMILY DWELLING DISTRICT, IN PART, SF-3, SINGLE-FAMILY DWELLING DISTRICT, IN PART, TH, TOWNHOUSE (ATTACHED) DWELLING DISTRICT, IN PART, 2F, TWO-FAMILY DWELLING (DUPLEX) DISTRICT, IN PART, MF-16, MULTIPLE-FAMILY DWELLING DISTRICT, IN PART, AND LR, LOCAL RETAIL DISTRICT, IN PART, TO PD, PLANNED DEVELOPMENT DISTRICT FOR A HOUSING DEVELOPMENT (GENERALLY LOCATED AT THE NORTHEAST CORNER OF THE INTERSECTION OF FAIRGROUNDS ROAD AND FIREWHEEL ROAD); CONTAINING A CUMULATIVE CLAUSE; CONTAINING A SAVINGS AND SEVERABILITY CLAUSE; PROVIDING FOR A MAXIMUM PENALTY OR FINE OF TWO THOUSAND DOLLARS ($2,000.00); AND ORDERING PUBLICATION (FIRST READING HELD SEPTEMBER 10, 2024) **(DISTRICT 1) (DEVELOPMENT SERVICES) (QUALITY OF LIFE AND PLACE)**

24. 10565 – AN ORDINANCE ADOPTING A FEE SCHEDULE; CONTAINING A SAVINGS AND SEVERABILITY CLAUSE; PROVIDING AN APPEAL PROCESS; ESTABLISHING AN EFFECTIVE DATE OF OCTOBER 1, 2024; AND ORDERING PUBLICATION (FIRST READING HELD SEPTEMBER 10, 2024) **(DISTRICT: NONE) (FINANCE) (PROVIDE SOUND GOVERNANCE & FISCAL MANAGEMENT)**

25. 10566 – AN ORDINANCE ALTERING PRIMA FACIE SPEED LIMITS ALONG CERTAIN STREETS IN THE CITY; AUTHORIZING INSTALLATION OF APPROPRIATE SIGNS AND MARKINGS; REPEALING ORDINANCE NO. 10542; CONTAINING A CUMULATIVE CLAUSE; CONTAINING A SAVINGS AND SEVERABILITY CLAUSE; PROVIDING FOR A MAXIMUM PENALTY OR FINE OF TWO HUNDRED DOLLARS ($200.00); AND ORDERING PUBLICATION (FIRST READING HELD SEPTEMBER 10, 2024) **(DISTRICT: NONE) (ENGINEERING SERVICES) (SET THE STANDARD FOR A SAFE AND SECURE CITY)**

PUBLIC HEARINGS

The City Council will hold public hearings on the following items:

26. 10567 – AN ORDINANCE GRANTING A SPECIAL EXCEPTION FOR LOT 2, BLOCK 2, HOLLANDALE HEIGHTS ADDITION, BLOCKS 1 AND 2 REPLAT, CITY AND COUNTY OF MIDLAND, TEXAS (THE “SUBJECT LOT”), BY PERMITTING OFF-STREET PARKING ON LOT 12, BLOCK 1, SUN GARDEN VILLAGE ADDITION, CITY AND COUNTY OF MIDLAND, TEXAS (THE “PARKING LOT”), SAID PARKING LOT BEING MORE THAN 150 FEET AWAY FROM THE BUILDING OR STRUCTURE ON THE SUBJECT LOT (THE SUBJECT LOT BEING GENERALLY LOCATED AT THE NORTHEAST CORNER OF THE INTERSECTION OF NORTH LAMESA ROAD AND EAST DORMARD AVENUE); CONTAINING A CUMULATIVE CLAUSE; CONTAINING A SAVINGS AND SEVERABILITY CLAUSE; PROVIDING FOR A MAXIMUM PENALTY OR FINE OF TWO THOUSAND DOLLARS ($2,000.00); ORDERING RECORDATION BY THE CITY SECRETARY IN THE DEED RECORDS OF MIDLAND COUNTY, TEXAS; AND ORDERING PUBLICATION **(DISTRICT 2) (DEVELOPMENT SERVICES) (QUALITY OF LIFE AND PLACE)**

27. 10568 – AN ORDINANCE EXTENDING THE BOUNDARIES OF THE CITY OF MIDLAND,

TEXAS, BY ADDING THERETO A CERTAIN AREA ADJOINING THE PRESENT CITY LIMITS, BEING A 22.119-ACRE TRACT OF LAND OUT OF SECTION 35, BLOCK 40, T-1-S, T&P RR CO. SURVEY, MIDLAND COUNTY, TEXAS (GENERALLY LOCATED ON THE NORTH SIDE OF STATE HIGHWAY 191, APPROXIMATELY 1,550 FEET WEST OF STATE HIGHWAY 158); ORDERING PUBLICATION; AND ORDERING RECORDATION BY THE CITY SECRETARY **(DISTRICT: NONE) (DEVELOPMENT SERVICES) (QUALITY OF LIFE AND PLACE)**

28. 10569 – AN ORDINANCE ESTABLISHING THE INITIAL ZONING CLASSIFICATION OF THE AREA INDICATED AS BEING A 22.119-ACRE TRACT OF LAND OUT OF SECTION 35, BLOCK 40, T-1-S, T&P RR CO. SURVEY, MIDLAND COUNTY, TEXAS, AS AN RR, REGIONAL RETAIL DISTRICT; SAID TRACT BEING GENERALLY LOCATED ON THE NORTH SIDE OF STATE HIGHWAY 191, APPROXIMATELY 1,550 FEET WEST OF STATE HIGHWAY 158; CONTAINING A CUMULATIVE CLAUSE; CONTAINING A SAVINGS AND SEVERABILITY CLAUSE; PROVIDING FOR A MAXIMUM PENALTY OR FINE OF TWO THOUSAND DOLLARS ($2,000.00); AND ORDERING PUBLICATION **(DISTRICT: NONE) (DEVELOPMENT SERVICES) (QUALITY OF LIFE AND PLACE)**

MISCELLANEOUS

29. MOTION MAKING APPOINTMENTS TO VARIOUS BOARDS AND COMMISSIONS **(DISTRICT: ALL) (CITY SECRETARY'S OFFICE)**

PUBLIC COMMENT

30. Receive public comments where individuals may address the City Council on City related issues and projects not on the present agenda. Any deliberation of or decision by the City Council regarding the item being discussed shall be limited to a motion to place the item on the agenda for a subsequent meeting. (Please limit comments to three minutes or less.)

EXECUTIVE SESSION

31. Pursuant to Texas Government Code § 551.101, the City Council will hold an Executive Session, which is closed to the public, to discuss the following matters as permitted under the following sections of the Texas Government Code:

    a. Section 551.071, Consultation with Attorney

    a.1. Discuss matters in which the duty of the attorney(s) to the governmental body under the Texas Disciplinary Rules of Professional Conduct of the State Bar of Texas clearly conflicts with Chapter 551 of the Texas Government Code.

Respectfully Submitted,

Tommy Gonzalez
City Manager

MEETING ASSISTANCE INFORMATION: The Midland City Hall and Council Chamber are wheelchair accessible. If you need special assistance to participate in this meeting, please contact the City Secretary's Office at (432) 685-7430. Notification 48 hours prior to the meeting will enable the City to make reasonable arrangements to ensure accessibility to this meeting.

CITY OF MIDLAND, TEXAS
MIDLAND CITY COUNCIL
SPECIAL MINUTES
September 5, 2024

The City Council convened in **Special** Session in the Greenwood Radio Tower, Midland, Texas, at 10:00 AM, Thursday, September 5, 2024.

Council Members present:	Eric Davidson, Amy Stretcher Burkes, Robin Poole, Lori Blong
Council Members absent:	Scott Dufford, Jack Ladd, John Norman
Staff members present:	City Governance Officer/City Secretary Marcia Bentley-German, Managing Director/Chief Information Officer Jennifer Frescaz

The meeting was called to order at 10:04 a.m.

SPECIAL SESSION

1. RIBBON CUTTING FOR THE MIDLAND COUNTY PUBLIC SAFETY RADIO UPGRADE PROJECT

   Mayor Blong, Council Member Robin Poole, Council Member Amy Stretcher Burkes and Council Member Eric Davidson attended the ribbon cutting ceremony for the Midland County Public Safety Radio Upgrade Project.

   Commissioner Luis Sanchez welcomed everyone in attendance and introduced Congressman August Pfluger of the 11th District of Texas.

   Remarks were made regarding the partnership with the surrounding Cities, Counties and families that were instrumental in getting this project off the ground. Awards were presented and the Hispanic Chamber of Commerce provided the ribbon cutting and certificate for the event.

All the business at hand having been completed, the meeting adjourned at 10:23 a.m.

PASSED AND APPROVED September 24, 2024.

_____
Lori Blong, Mayor

ATTEST:

_____

DRAFT

Marcia Bentley-German
City Governance Officer/City Secretary

DRAFT

MIDLAND CITY COUNCIL
MINUTES
September 10, 2024

The City Council convened in regular session in the Council Chamber, City Hall, Midland, Texas, at 10:00 a.m., September 10, 2024.

Council Members present:	Eric Davidson, Amy Stretcher Burkes, Robin Poole, Lori Blong, Scott Dufford, Jack Ladd, John Norman
Council Members absent:	None
Staff members present:	City Manager Tommy Gonzalez, City Attorney John Ohnemiller, Deputy City Manager Morris Williams Jr.

The meeting was called to order at 10:00 a.m.

OPENING ITEMS

1. Invocation – Pastor Larry Gilbert, Stonegate Fellowship

2. Pledge of Allegiance

PRESENTATIONS

3. Presentation of special events, organizations, individuals, periods of time, or reports, including, but not limited to:

   3a. Presentation of Proclamation for “The American Legion Day”.

   3b. Presentation of Proclamation for “National Surgical Technologist Week”.

   A presentation for this proclamation was not conducted.

   3c. Presentation from Director of Finance Christy Weakland regarding Budget.

   Budget Manager Alssya Coppens presented information on the budget for 2025 by reviewing the 2025 proposed tax rates, property tax valuation, property tax rates, tax rates-peer cities, tax bills-peer cities and the allocation breakdown of the budget with regard to the strategic goal objectives one through six.

   With the tax rate being discussed today, the City continues to maintain the lowest tax rate they have had in 20 years.

DRAFT

3d. Presentation from Director of Airports Justine Ruff regarding Capital Improvement Project.

City Manager Tommy Gonzalez provided a segue into the five year budget forecast and capital improvement plans for the Airport and Airpark.

Airports Director Justine Ruff provided a brief presentation on capital improvement projects for the Airport and Airpark and how they tie into Strategic Goals one and five. The mission is to provide more space with a new security checkpoint, terminal modernization, passenger screening relocation, long term infrastructure and self-serve fuel at Airpark. The total project cost is estimated to be around $38M.

Mrs. Ruff reported there will be 18 projects in the next five years and that they are competing for grants and leveraging state and federal dollars. Mrs. Ruff reviewed the funding plan next steps, the financing strategy and funding plan accomplishments such as the airport being100% self-sufficient; no subsidy from the general fund. The Airport has reimbursed the General Fund for subsidies received in the past.

CONSENT AGENDA

4. MOTION APPROVING THE FOLLOWING MINUTES:

   4a. REGULAR SESSION OF AUGUST 27, 2024

5. 099-2024 – MOTION ACCEPTING GRANT FUNDS IN THE AMOUNT OF $1,033,500 AWARDED BY THE U.S. DEPARTMENT OF HOMELAND SECURITY 2023 ASSISTANCE TO FIREFIGHTERS GRANT; SAID GRANT FUNDS TO BE USED FOR THE PURCHASE OF A QUINT FIRE TRUCK; AUTHORIZING THE EXECUTION OF ALL DOCUMENTS NECESSARY TO ACCEPT SAID GRANT FUNDS; AND APPROPRIATING THE SUM OF $939,545.45 TO THE GARAGE FUND **(DISTRICT: NONE) (FINANCE) (SET THE STANDARD FOR A SAFE AND SECURE CITY)**

6. 2024-138 – RESOLUTION APPROVING THE PURCHASE OF A SPARTAN 77' REAR MOUNT AERIAL QUINT ON A GLADIATOR CHASSIS FROM METRO FIRE APPARATUS SPECIALISTS, INC., THROUGH SOURCEWELL FOR A TOTAL COST OF $1,841,968.00; AND APPROPRIATING AND TRANSFERRING FUNDS **(DISTRICT: NONE) (GENERAL SERVICES) (SET THE STANDARD FOR A SAFE AND SECURE CITY)**

7. 2024-139 – RESOLUTION AUTHORIZING THE PURCHASE OF AN ESTIMATED ANNUAL SUPPLY OF CHEMICALS FOR THE WATER RECLAMATION FACILITY FOR FISCAL YEAR 2025 FROM MULTIPLE BIDDERS, FOR A TOTAL COST OF $712,735.00 **(DISTRICT: NONE) (GENERAL SERVICES) (PROVIDE SOUND GOVERNANCE & FISCAL MANAGEMENT)**

8. 2024-140 – RESOLUTION AUTHORIZING THE EXECUTION OF AN AGREEMENT WITH LOCKTON-DUNNING SERIES OF LOCKTON COMPANIES, LLC FOR BENEFITS

DRAFT

CONSULTING AND BROKERAGE SERVICES FOR THE ADMINISTRATIVE SERVICES DEPARTMENT THROUGH THE EQUALIS GROUP PURCHASING PROGRAM FOR A TOTAL COST OF $509,434.27; AND AUTHORIZING PAYMENT **(DISTRICT: NONE) (GENERAL SERVICES) (PROVIDE SOUND GOVERNANCE & FISCAL MANAGEMENT)**

9. 2024-141 – RESOLUTION AWARDING A CONTRACT TO RIG SAFE SOLUTIONS INC. FOR ANNUAL GENERATOR MAINTENANCE FOR AN ANNUAL COST NOT TO EXCEED $59,620.00 **(DISTRICT: ALL) (GENERAL SERVICES) (PROVIDE SOUND GOVERNANCE & FISCAL MANAGEMENT)**

10. 2024-142 – RESOLUTION AWARDING A CONTRACT IN THE AMOUNT OF $372,721.46 FOR THE INSTALLATION OF PLAYGROUND EQUIPMENT AT TUMBLEWEED PARK AND THE BILL WILLIAMS SOFTBALL COMPLEX TO 4B RECREATION D/B/A PLAYGROUNDS ETC.; APPROVING $93,180.36 FOR PROJECT RELATED EXPENSES; AND APPROPRIATING FUNDS **(DISTRICT: ALL) (GENERAL SERVICES) (QUALITY OF LIFE AND PLACE)**

12. 2024-144 – RESOLUTION ADOPTING A CAPITAL FUNDING PLAN FOR IMPROVEMENTS AT THE MIDLAND INTERNATIONAL AIR & SPACE PORT **(DISTRICT 4) (AIRPORTS) (TRANSPARENT & CONSISTENT COMMUNICATION)**

13. 2024-145 – RESOLUTION ESTABLISHING THE DATES OF THE REGULAR CITY COUNCIL MEETINGS TO BE HELD DURING THE CALENDAR YEAR 2025 **(DISTRICT: ALL) (CITY SECRETARY'S OFFICE) (TRANSPARENT & CONSISTENT COMMUNICATION)**

14. 100-2024 – MOTION APPROVING, WITH STAFF'S RECOMMENDED CONDITIONS, A PRELIMINARY PLAT OF SHENANDOAH INDUSTRIAL PARK, BEING A PLAT OF A 25.64-ACRE TRACT OF LAND OUT OF SECTION 16, BLOCK 38, T-1-S, T&P CO. RR SURVEY, MIDLAND COUNTY, TEXAS (GENERALLY LOCATED ON THE EAST SIDE OF NORTH COUNTY ROAD 1150, APPROXIMATELY 800 FEET NORTH OF EAST COUNTY ROAD 50) (EXTRATERRITORIAL JURISDICTION) **(DISTRICT: NONE) (DEVELOPMENT SERVICES) (QUALITY OF LIFE AND PLACE)**

15. 101-2024 – MOTION APPROVING, WITH STAFF'S RECOMMENDED CONDITIONS, A PRELIMINARY PLAT OF HIGHWAY 158 ADDITION, SECTION 1, BEING A PLAT OF A 64.05-ACRE TRACT OF LAND OUT OF THE NORTH PART OF THE SOUTH HALF OF SECTION 1, BLOCK 38, T-2-S, T. J. MURPHY SURVEY, THE NORTH PART OF THE SOUTH HALF OF TRACT 1, BLOCK 38, T-2-S, H. M. HORTON SURVEY, AND TRACT 2, BLOCK 38, T-2-S, J. M. ROSE SURVEY, MIDLAND COUNTY, TEXAS (GENERALLY LOCATED ON THE SOUTHWEST CORNER OF THE INTERSECTION OF SOUTH COUNTY ROAD 1140 AND EAST STATE HIGHWAY 158) **(DISTRICT: NONE) (DEVELOPMENT SERVICES) (QUALITY OF LIFE AND PLACE)**

16. 2024-146 – RESOLUTION GRANTING A VARIANCE FOR AN 11.486-ACRE TRACT OF

DRAFT

LAND OUT OF SECTION 1, BLOCK X, H.P. HILLIARD SURVEY, CITY AND COUNTY OF MIDLAND, TEXAS (GENERALLY LOCATED ON THE SOUTH SIDE OF SOLOMON LANE, APPROXIMATELY 2,400 FEET EAST OF NORTH BIG SPRING STREET), BY PERMITTING CONSTRUCTION OF RESIDENCES WHERE NO PORTION OF ANY STRUCTURE IS CLOSER THAN 150 FEET OF AN OIL AND GAS WELL; AND AUTHORIZING ISSUANCE OF BUILDING PERMITS **(DISTRICT 1) (DEVELOPMENT SERVICES) (SET THE STANDARD FOR A SAFE AND SECURE CITY)**

Amy Stretcher Burkes moved to approve Consent Agenda items 4-18, excluding item 11; seconded by Robin Poole.

The motion passed by the following vote:
AYE: Davidson, Stretcher Burkes, Poole, Blong, Dufford, Ladd, Norman
NAY: None
ABSTAIN: None
ABSENT: None

The following item(s) were pulled from consent agenda and considered individually.

11. 2024-143 – RESOLUTION AWARDING A CONTRACT IN THE AMOUNT OF $440,112.80 FOR THE MIDLAND HOGAN PARK GOLF COURSE CLUBHOUSE RENOVATIONS PROJECT TO TOMMY KLEIN CONSTRUCTION, INC.; APPROVING $44,012.20 FOR PROJECT RELATED EXPENSES; AND APPROPRIATING FUNDS

    Item pulled by staff. No action taken.

SECOND READINGS

17. 10559 – AN ORDINANCE AMENDING THE ZONING DISTRICT MAP OF THE CITY OF MIDLAND TO GRANT A SPECIFIC USE DESIGNATION WITHOUT TERM FOR LOT 1, BLOCK 1, YMCA ADDITION, SECTION 1, CITY AND COUNTY OF MIDLAND, TEXAS (GENERALLY LOCATED AT THE SOUTHWEST CORNER OF THE INTERSECTION OF AVALON DRIVE AND MOCKINGBIRD LANE), WHICH IS PRESENTLY ZONED AE, AGRICULTURAL ESTATE DISTRICT, ALLOWING SAID PROPERTY TO BE USED FOR A CHILD-CARE: DAY-CARE CENTER; MAKING SAID DESIGNATION SUBJECT TO CERTAIN CONDITIONS AND RESTRICTIONS CONTAINED HEREIN; CONTAINING A CUMULATIVE CLAUSE; CONTAINING A SAVINGS AND SEVERABILITY CLAUSE; PROVIDING FOR A MAXIMUM PENALTY OR FINE OF TWO THOUSAND DOLLARS ($2,000.00); AND ORDERING PUBLICATION (FIRST READING HELD AUGUST 27, 2024) **(DISTRICT 4) (DEVELOPMENT SERVICES) (QUALITY OF LIFE AND PLACE)**

    Deputy City Secretary Jan Hamilton read the caption of Ordinance No. 10559.

    Scott Dufford moved to approve the second and final reading of Ordinance No. 10559; seconded by John Norman.

    The motion passed by the following vote:
    AYE: Davidson, Stretcher Burkes, Poole, Blong, Dufford, Ladd, Norman

DRAFT

NAY: None
ABSTAIN: None
ABSENT: None

18. 10560 – AN ORDINANCE AMENDING THE ZONING DISTRICT MAP OF THE CITY OF MIDLAND TO REZONE LOT 1A, BLOCK 97, ORIGINAL TOWN ADDITION, SECTION 26, CITY AND COUNTY OF MIDLAND, TEXAS, FROM LI, LIGHT INDUSTRIAL DISTRICT TO O-1, OFFICE DISTRICT (GENERALLY LOCATED AT THE SOUTHWEST CORNER OF THE INTERSECTION OF SOUTH BAIRD STREET AND EAST INDIANA AVENUE); CONTAINING A CUMULATIVE CLAUSE; CONTAINING A SAVINGS AND SEVERABILITY CLAUSE; PROVIDING FOR A MAXIMUM PENALTY OR FINE OF TWO THOUSAND DOLLARS ($2,000.00); AND ORDERING PUBLICATION (FIRST READING HELD AUGUST 27, 2024) **(DISTRICT 2) (DEVELOPMENT SERVICES) (QUALITY OF LIFE AND PLACE)**

Deputy City Secretary Jan Hamilton read the caption of Ordinance No. 10560.

John Norman moved to approve the second and final reading of Ordinance No. 10560; seconded by Robin Poole.

The motion passed by the following vote:
AYE: Davidson, Stretcher Burkes, Poole, Blong, Dufford, Ladd, Norman
NAY: None
ABSTAIN: None
ABSENT: None

PUBLIC HEARINGS

The City Council will hold public hearings on the following items:

19. 10561 – GATHER PUBLIC INPUT ON THE PROPOSED 2024-2025 BUDGET; AND CONSIDER AN ORDINANCE OF THE CITY OF MIDLAND PROVIDING FUNDS FOR THE FISCAL YEAR BEGINNING OCTOBER 1, 2024, AND ENDING SEPTEMBER 30, 2025, BY APPROVING THE BUDGET FOR SAID PERIOD AND APPROPRIATING AND SETTING ASIDE THE NECESSARY FUNDS OUT OF THE GENERAL AND OTHER REVENUES AND UNAPPROPRIATED FUND BALANCE OF THE CITY OF MIDLAND FOR SAID FISCAL YEAR FOR THE MAINTENANCE AND OPERATION OF THE VARIOUS DEPARTMENTS AND FOR VARIOUS ACTIVITIES AND IMPROVEMENTS TO THE CITY; AND ORDERING PUBLICATION **(DISTRICT: ALL) (FINANCE) (PROVIDE SOUND GOVERNANCE & FISCAL MANAGEMENT)**

Deputy City Secretary Jan Hamilton read the caption of Ordinance No. 10561.

Mayor Blong opened the public hearing at 10:36 a.m.

Tyler Thomas, Lubbock, is seeking clarification regarding raises for non-sworn staff/personnel in the proposed budget.

Finance Director Christy Weakland gave a brief explanation of the question for clarification

DRAFT

regarding Cost of Living Adjustment (COLA), and step increases/pay progressions for sworn and non-sworn employees.

Nathan Thompson, 105 N. G. Street, had the same question and was looking for clarification. Mr. Thompson reported Fire Fighters do not get a raise every year and will now get less of a COLA.

Mayor Blong reported there is currently an ongoing comprehensive discussion on the pay for firefighters.

Finance Director Christy Weakland reviewed the calculations that have been done for different fund dollar amounts.

City Manager Tommy Gonzalez reported on the different revenues for the General Fund.

Mayor Blong reported on the differences and importance regarding Enterprise Funds.

Finance Director Christy Weakland reminded Council that if any amount is above the No-New-Revenue Rate (which it is), there has to be a supermajority vote by Council.

Council Member Poole inquired about the order of the budget vote in which Mrs. Weakland and Mr. Gonzalez explained that by law, the budget has to be approved first.

The public hearing closed at 10:51 a.m.

Jack Ladd moved to approve the first of two readings of Ordinance No. 10561; seconded by Scott Dufford.

The motion passed by the following vote:
AYE: Davidson, Stretcher Burkes, Poole, Blong, Dufford, Ladd, Norman
NAY: None
ABSTAIN: None
ABSENT: None

20. 10562 – TAX RATE INCREASE FOR FISCAL YEAR 2024-2025; AN ORDINANCE FIXING THE TAX LEVY FOR THE CITY OF MIDLAND, TEXAS, FOR THE FISCAL YEAR BEGINNING OCTOBER 1, 2024, AND ENDING SEPTEMBER 30, 2025 **(DISTRICT: ALL) (FINANCE) (PROVIDE SOUND GOVERNANCE & FISCAL MANAGEMENT)**

Deputy City Secretary Jan Hamilton read the caption of Ordinance No. 10562.

Mayor Blong opened the public hearing at 10:54 a.m. There being no one present wishing to speak, the public hearing was immediately closed.

Council Member Dufford read the legal motion language for the vote.

Council Member Poole reported the amount is so small, we could go down to the No-New-Revenue Rate.

DRAFT

Scott Dufford moved that the property tax rate be increased by the adoption of a tax rate of 0.348662, which is effectively a 1.34 percent increase in the tax rate of the first of two readings of Ordinance No. 10562; seconded by Jack Ladd.

The motion passed by the following vote:
AYE: Davidson, Stretcher Burkes, Blong, Dufford, Ladd, Norman
NAY: Poole
ABSTAIN: None
ABSENT: None

21. 10563 – AN ORDINANCE GRANTING A SPECIAL EXCEPTION FOR A 1.51-ACRE TRACT OF LAND OUT OF THE SOUTHEAST QUARTER OF SECTION 7, BLOCK X, H.P. HILLIARD SURVEY, CITY AND COUNTY OF MIDLAND, TEXAS (GENERALLY LOCATED ON THE NORTH SIDE OF MOCKINGBIRD LANE, APPROXIMATELY 800 FEET WEST OF NORTH MIDLAND DRIVE), BY PERMITTING A REDUCED MINIMUM LOT AREA; CONTAINING A CUMULATIVE CLAUSE; CONTAINING A SAVINGS AND SEVERABILITY CLAUSE; PROVIDING FOR A MAXIMUM PENALTY OR FINE OF TWO THOUSAND DOLLARS ($2,000.00); ORDERING RECORDATION BY THE CITY SECRETARY IN THE DEED RECORDS OF MIDLAND COUNTY, TEXAS; AND ORDERING PUBLICATION **(DISTRICT 4) (DEVELOPMENT SERVICES) (QUALITY OF LIFE AND PLACE)**

Deputy City Secretary Jan Hamilton read the caption of Ordinance No. 10563.

Planning & Development Officer Elizabeth Triggs reported this is a special exception request to allow for a 1.5 acre lot. No letters of objection have been received and staff recommends approval.

Mayor Blong opened the public hearing at 10:58 a.m. There being no one present wishing to speak, the public hearing was immediately closed.

Jack Ladd moved to approve the first of two readings of Ordinance No.10563; seconded by Eric Davidson.

The motion passed by the following vote:
AYE: Davidson, Stretcher Burkes, Poole, Blong, Dufford, Ladd, Norman
NAY: None
ABSTAIN: None
ABSENT: None

22. 10564 – AN ORDINANCE AMENDING THE ZONING DISTRICT MAP OF THE CITY OF MIDLAND TO REZONE A 302.39-ACRE TRACT OF LAND OUT OF SECTION 18, BLOCK 38, T-1-S, T&P RR CO. SURVEY, CITY AND COUNTY OF MIDLAND, TEXAS, FROM SF-1, SINGLE-FAMILY DWELLING DISTRICT, IN PART, SF-2, SINGLE-FAMILY DWELLING DISTRICT, IN PART, SF-3, SINGLE-FAMILY DWELLING DISTRICT, IN PART, TH, TOWNHOUSE (ATTACHED) DWELLING DISTRICT, IN PART, 2F, TWO-FAMILY DWELLING (DUPLEX) DISTRICT, IN PART, MF-16, MULTIPLE-FAMILY DWELLING DISTRICT, IN PART, AND LR, LOCAL RETAIL DISTRICT, IN PART, TO PD, PLANNED

DRAFT

DEVELOPMENT DISTRICT FOR A HOUSING DEVELOPMENT (GENERALLY LOCATED AT THE NORTHEAST CORNER OF THE INTERSECTION OF FAIRGROUNDS ROAD AND FIREWHEEL ROAD); CONTAINING A CUMULATIVE CLAUSE; CONTAINING A SAVINGS AND SEVERABILITY CLAUSE; PROVIDING FOR A MAXIMUM PENALTY OR FINE OF TWO THOUSAND DOLLARS ($2,000.00); AND ORDERING PUBLICATION **(DISTRICT 1) (DEVELOPMENT SERVICES) (QUALITY OF LIFE AND PLACE)**

Deputy City Secretary Jan Hamilton read the caption of Ordinance No. 10564.

Planning & Development Officer Elizabeth Triggs gave a brief overview of the item noting it is for a zone change from a combination of residential and local retail districts to a planned development district. This development is about 300 acres and will include 1,300 new residential lots in North Midland (Mockingbird Ridge North) to include amenities. The request is in line with the Tall City Comprehensive Plan. There have been no letters of objection and staff recommends approval subject to certain conditions.

Council Member Norman inquired of the project timeline with regard to Fairgrounds Road. City Manager Tommy Gonzalez will get back to Council with a timeline but the developer will be responsible for developing their portion of Fairgrounds.

Council Member Poole inquired about a developer agreement. Mrs. Triggs reported there is a developer agreement for the development of Todd Road that is currently being negotiated. The City will develop a portion and the developer will develop a portion.

Council Member Eric Davidson inquired about phase 1 with regard to building out the roads. Mrs. Triggs reported no building permits may be pulled until the public infrastructure improvements are in place.

Mayor Blong opened the public hearing at 11:18 a.m.

Ronnie Wallace, Lubbock, Land Planner with Betenbough Homes, spoke about encouraging off-street parking. They would like residents to park inside their garage or driveway as carports will be prohibited. They are looking into how this will be enforced.

Council Member Amy Stretcher Burkes thanked Mr. Wallace for utilizing previous feedback such as off-street parking.

Council Member Ladd inquired about clearing the land for amenities such as grass. Mr. Wallace reported that Kimley Horn & Associates have been hired as the landscape architects.

There being no one else wishing to speak, the public hearing was closed at 11:26 a.m.

Jack Ladd moved to approve the first of two readings of Ordinance No. 10564; seconded by Scott Dufford.

The motion passed by the following vote:

DRAFT

AYE: Davidson, Stretcher Burkes, Poole, Blong, Dufford, Ladd, Norman
NAY: None
ABSTAIN: None
ABSENT: None

23. 102-2024 – THE PROPOSED GRANTING OF OIL AND GAS WELL PERMITS TO COG OPERATING, LLC ("OPERATOR") FOR THE DRILLING OF THE FOLLOWING OIL AND GAS WELLS: MCC HZ UNIT #1106BH; MCC HZ UNIT #1106JH; MCC HZ UNIT #1107AH; MCC HZ UNIT #1107LH; MCC HZ UNIT #1107MH; MCC HZ UNIT #1108BH; MCC HZ UNIT #1109JH; MCC HZ UNIT #1109LH; MCC HZ UNIT #1111MH; AND MCC HZ UNIT #1109AH; SAID WELLS BEING GENERALLY LOCATED BETWEEN 1,630 FEET AND 1,810 FEET EAST OF NORTH A STREET EXTENSION AND 5,040 FEET NORTH OF MOCKINGBIRD LANE – PUBLIC HEARING ONLY **(DISTRICT 1) (DEVELOPMENT SERVICES) (SET THE STANDARD FOR A SAFE AND SECURE CITY)**

Mayor Blong opened the public hearing at 11:27 a.m.

Alexander Davis, 600 W. Illinois, is available to speak only if Council has any questions for this item or the next item (number 24). Council had no questions.

There being no one else wishing to speak, the public hearing was closed at 11:28 a.m.

PUBLIC HEARING ONLY – NO ACTION TAKEN

24. 103-2024 – THE PROPOSED GRANTING OF OIL AND GAS WELL PERMITS TO COG OPERATING, LLC ("OPERATOR") FOR THE DRILLING OF THE FOLLOWING OIL AND GAS WELLS: MCC HZ UNIT #1111AH; MCC HZ UNIT #1111BH; MCC HZ UNIT #1111LH; AND MCC HZ UNIT #1112JH; SAID WELLS BEING GENERALLY LOCATED BETWEEN 490 FEET AND 550 FEET EAST OF NORTH A STREET EXTENSION AND 5,005 FEET NORTH OF MOCKINGBIRD LANE – PUBLIC HEARING ONLY **(DISTRICT 1) (DEVELOPMENT SERVICES) (SET THE STANDARD FOR A SAFE AND SECURE CITY)**

Mayor Blong opened the public hearing at 11:29 a.m. There being no one present wishing to speak, the public hearing was immediately closed.

PUBLIC HEARING ONLY – NO ACTION TAKEN

MISCELLANEOUS

25. 10565 – AN ORDINANCE ADOPTING A FEE SCHEDULE; CONTAINING A SAVINGS AND SEVERABILITY CLAUSE; PROVIDING AN APPEAL PROCESS; ESTABLISHING AN EFFECTIVE DATE OF OCTOBER 1, 2024; AND ORDERING PUBLICATION **(DISTRICT: NONE) (FINANCE) (PROVIDE SOUND GOVERNANCE & FISCAL MANAGEMENT)**

Deputy City Secretary Jan Hamilton read the caption of Ordinance No. 10565.

DRAFT

Finance Director Christy Weakland reported this is part of the budget process regarding adjustment in fees.

Scott Dufford moved to approve the first of two readings of Ordinance No. 10565; seconded by Jack Ladd.

The motion passed by the following vote:
AYE: Davidson, Stretcher Burkes, Poole, Blong, Dufford, Ladd, Norman
NAY: None
ABSTAIN: None
ABSENT: None

26. 10566 – AN ORDINANCE ALTERING PRIMA FACIE SPEED LIMITS ALONG CERTAIN STREETS IN THE CITY; AUTHORIZING INSTALLATION OF APPROPRIATE SIGNS AND MARKINGS; REPEALING ORDINANCE NO. 10542; CONTAINING A CUMULATIVE CLAUSE; CONTAINING A SAVINGS AND SEVERABILITY CLAUSE; PROVIDING FOR A MAXIMUM PENALTY OR FINE OF TWO HUNDRED DOLLARS ($200.00); AND ORDERING PUBLICATION **(DISTRICT: NONE) (ENGINEERING SERVICES) (SET THE STANDARD FOR A SAFE AND SECURE CITY)**

Deputy City Secretary Jan Hamilton read the caption of Ordinance No. 10566.

Traffic Engineer Taha Sakrani gave a brief overview of the item noting speed limits on certain residential streets will go from 30 mph to 25 mph.

Eric Davidson moved to approve the first of two readings of Ordinance No. 10566; seconded by Scott Dufford.

The motion passed by the following vote:
AYE: Davidson, Stretcher Burkes, Poole, Blong, Dufford, Ladd, Norman
NAY: None
ABSTAIN: None
ABSENT: None

27. MOTION MAKING APPOINTMENTS TO VARIOUS BOARDS AND COMMISSIONS **(DISTRICT: ALL) (CITY SECRETARY'S OFFICE)**

This item has been deferred until the next City Council meeting on September 24, 2024.

PUBLIC COMMENT

28. Receive public comments where individuals may address the City Council on City related issues and projects not on the present agenda. Any deliberation of or decision by the City Council regarding the item being discussed shall be limited to a motion to place the item on the agenda for a subsequent meeting. (Please limit comments to three minutes or less.)

All the business at hand having been completed, the meeting adjourned at 11:33 a.m.

DRAFT

PASSED AND APPROVED September 24, 2024.

Lori Blong, Mayor

ATTEST:

Marcia Bentley-German
City Governance Officer/City Secretary

DRAFT

MIDLAND CITY COUNCIL
MINUTES
September 17, 2024

The City Council convened in regular session in the Council Chamber, City Hall, Midland, Texas, at 10:00 a.m., September 17, 2024.

Council Members present:	Eric Davidson, Amy Stretcher Burkes, Robin Poole, Lori Blong, Scott Dufford, John Norman
Council Members absent:	Jack Ladd
Staff members present:	City Manager Tommy Gonzalez, City Attorney John Ohnemiller, Deputy City Manager Morris Williams Jr., Assistant City Manager Jose Ortiz

The meeting was called to order at 10:01 a.m.

BUDGET & TAX RATE

1. 10561 – AN ORDINANCE OF THE CITY OF MIDLAND PROVIDING FUNDS FOR THE FISCAL YEAR BEGINNING OCTOBER 1, 2024, AND ENDING SEPTEMBER 30, 2025, BY APPROVING THE BUDGET FOR SAID PERIOD AND APPROPRIATING AND SETTING ASIDE THE NECESSARY FUNDS OUT OF THE GENERAL AND OTHER REVENUES AND UNAPPROPRIATED FUND BALANCE OF THE CITY OF MIDLAND FOR SAID FISCAL YEAR FOR THE MAINTENANCE AND OPERATION OF THE VARIOUS DEPARTMENTS AND FOR VARIOUS ACTIVITIES AND IMPROVEMENTS TO THE CITY; AND ORDERING PUBLICATION (FIRST READING HELD SEPTEMBER 10, 2024) **(DISTRICT: ALL) (FINANCE) (PROVIDE SOUND GOVERNANCE & FISCAL MANAGEMENT)**

   Rachel Guentensberger read the caption of Ordinance No. 10561.

   Finance Director Christy Weakland gave a brief update on the budget and reviewed the proposed rate that was discussed last week. Mrs. Weakland also reviewed the General Fund.

   Council Member Poole inquired about the increases in pay for the Firefighters.

   City Manager Tommy Gonzalez reviewed the different pay increases throughout the City.

   Scott Dufford moved to approve the second and final reading of Ordinance No. 10561; seconded by John Norman.

DRAFT

The motion passed by the following vote:
AYE: Davidson, Stretcher Burkes, Poole, Blong, Dufford, Norman
NAY: None
ABSTAIN: None
ABSENT: Ladd

2. 2024-147 – RESOLUTION RATIFYING THE PROPERTY TAX REVENUE INCREASE REFLECTED IN THE FISCAL YEAR 2024-2025 BUDGET **(DISTRICT: NONE) (FINANCE) (PROVIDE SOUND GOVERNANCE & FISCAL MANAGEMENT)**

Finance Director Christy Weakland reported that if any revenue is raised it would need to be ratified.

City Manager Tommy Gonzalez noted the tax rate is lower this year.

Scott Dufford moved to approve Resolution No. 2024-147; seconded by John Norman.

The motion passed by the following vote:
AYE: Davidson, Stretcher Burkes, Blong, Dufford, Norman
NAY: Poole
ABSTAIN: None
ABSENT: Ladd

3. 10562 – AN ORDINANCE FIXING THE TAX LEVY FOR THE CITY OF MIDLAND, TEXAS, FOR THE FISCAL YEAR BEGINNING OCTOBER 1, 2024, AND ENDING SEPTEMBER 30, 2025 **(DISTRICT: ALL) (FINANCE) (PROVIDE SOUND GOVERNANCE & FISCAL MANAGEMENT)**

Rachel Guentensberger read the caption of Ordinance No. 10562.

Finance Director Christy Weakland reminded Council this vote needs to be a supermajority, meaning it needs 60% of votes for it to pass.

Scott Dufford moved to approve the second and final reading of Ordinance No. 10562; seconded by John Norman.

The motion passed by the following vote:
AYE: Davidson, Stretcher Burkes, Blong, Dufford, Norman
NAY: Poole
ABSTAIN: None
ABSENT: Ladd

All the business at hand having been completed, the meeting adjourned at 10:11 a.m.

PASSED AND APPROVED September 24, 2024.

_____
Lori Blong, Mayor

DRAFT

ATTEST:

_____

Marcia Bentley-German
City Governance Officer/City Secretary

DRAFT

City Council Meeting

Item Number: 5

Meeting Date: September 24, 2024

To: City Council / City Manager

From: Christy Weakland, Director

Subject: MOTION APPROPRIATING THE SUM OF $247,931.68 FROM THE HOTEL MOTEL UNAPPROPRIATED FUND BALANCE FOR THE DOWNTOWN CHRISTMAS CELEBRATION OF LIGHTS (DISTRICT 3) (FINANCE) (QUALITY OF LIFE AND PLACE)

Purpose:

To appropriate funds for downtown Christmas celebration of lights.

Recommended City Council Action:

Approve

Fiscal Impact:

$247,931.68 will be appropriated from the unappropriated fund balance of the Hotel Motel Fund.

Strategic Priority:

(Quality of Life and Place)

Discussion:

The downtown Christmas festival will be an economic boost, bringing the community together for the holidays as well as increasing tourism to Midland.

Morris Williams Jr.

City Manager's Office

Check Request: 2024/24006562

DECOR IQ, LLC
1310 W Laurel
San Antonio, TX 78201-6433
USA
210-667-3603
accounting@decoriq.com

DECOR IQ
Holiday & Event Services

INVOICE

BILL TO
City of Midland
300 N Loraine St
Midland, TX 79701

SHIP TO
City of Midland
300 N Loraine St
Midland, TX 79701

INVOICE	912
DATE	08/16/2024
TERMS	Due on receipt
DUE DATE	09/01/2024

SALES REP
Stacey Jordan

	DESCRIPTION	RATE	DUE	AMOUNT
Lease - Installation/Removal	Garland Under (2) Convention Center Signs Install/Strike/Storage of (6) Decorated Garland (Color TBD)	2,780.33	50.00 % of 2,780.33	1,390.17
Lease - Installation/Removal	Garland Along Roof of Convention Center Install/Strike/Storage of (150) Decorated Garland (Color TBD	69,508.13	50.00 % of 69,508.13	34,754.07
Lease - Installation/Removal	Garland for (3) Awnings Install/Strike/Storage of (86) Decorated Garland (Color TBD)	39,851.33	50.00 % of 39,851.33	19,925.67
Lease - Installation/Removal	Garland for Lamp Posts (40 Total) Install/Strike/Storage of (80) Decorated Garland (Color TBD)	31,665.60	50.00 % of 31,665.60	15,832.80
Lease - Installation/Removal	Walk Through Packages at Either Side of Stage Area Install/Strike/Storage of (2) Gift Package Entry Gate (includes bases)	22,666.69	50.00 % of 22,666.69	11,333.35
Lease - Installation/Removal	Walk Through Ornament Between Splash Pad and Convention Center Entrance Install/Strike/Storage of (1) 16' Walk Through Ornament (No Seating)	18,049.78	50.00 % of 18,049.78	9,024.89
Lease - Installation/Removal	Entrance of Park Install/Strike/Storage of (2) Custom Arch with Soldiers and	48,909.97	50.00 % of 48,909.97	24,454.99

REMITTANCE ADDRESS:
14241 Commerce Dr
Garden Grove, CA 92843

	Event Signage Above (Must Allow Truck Under for Events)			
Lease - Installation/Removal	Feature Tree in Green Area (1) New Drum Base for 50' Tree (No Entry)	29,183.54	50.00 % of 29,183.54	14,591.77
Lease - Installation/Removal	Feature Tree in Green Area Labor to Install (1) Customer Owned 50' Tree	15,444.00	50.00 % of 15,444.00	7,722.00
Lease - Installation/Removal	Feature Tree in Green Area Updated Ornamentation to Match Garland	23,016.83	50.00 % of 23,016.83	11,508.42
Lease - Installation/Removal	Interactive Area Install/Strike/Storage of (1) Tic Tac Toe Board	27,547.92	50.00 % of 27,547.92	13,773.96
Lease - Installation/Removal	Photo Op Area Install/Strike/Storage of (1) Train Photo Op	33,122.87	50.00 % of 33,122.87	16,561.44
Lease - Installation/Removal	Photo Op Area Install/Strike/Storage of (1) Ornament Photo Op with Midland Logo Backdrop	8,099.54	50.00 % of 8,099.54	4,049.77
Lease - Installation/Removal	Photo Op Area Install/Strike/Storage of (1) Happy Holidays Photo Frame	5,843.49	50.00 % of 5,843.49	2,921.75
Lease - Installation/Removal	Photo Op Area Install/Strike/Storage of (1) 30' Gift Package Tree	50,681.84	50.00 % of 50,681.84	25,340.92
Lease - Installation/Removal	Photo Op Area Install/Strike/Storage of (2) 3D Snowflake (base included)	16,507.29	50.00 % of 16,507.29	8,253.65
Lease - Installation/Removal	Photo Op Area Install/Strike/Storage of (1) 3D Package (base included)	2,750.61	50.00 % of 2,750.61	1,375.31
Lease - Installation/Removal	Monument Signs Install/Strike/Storage of (4) Angel's on Monument Sign	24,654.08	50.00 % of 24,654.08	12,327.04
Lease - Installation/Removal	Tree Lighting of Focal Trees in (2) Park Install/Strike/Storage of (65) StarBurst Installed in Canopy of Tree	25,579.42	50.00 % of 25,579.42	12,789.71

50% Deposit
Pricing is a LEASE per year for (3) Years 2024-2026
Year 1 $495,863.26
Year 2 $495,863.26
Year 3 $495,863.26
Thank you for your business with Decor IQ; we truly appreciate your support and look forward to serving you again!

SUBTOTAL	247,931.68
TAX	0.00
TOTAL	247,931.68
BALANCE DUE	**$247,931.68**

REMITTANCE ADDRESS:
14241 Commerce Dr
Garden Grove, CA 92843
Page 2 of 3

Pay invoice

REMITTANCE ADDRESS:
14241 Commerce Dr
Garden Grove, CA 92843

City Council Meeting

Item Number: 6

Meeting Date: September 24, 2024

To: City Council / City Manager

From: Christy Weakland, Director

Subject: RESOLUTION AMENDING THE AUTHORIZED REPRESENTATIVES OF THE CITY OF MIDLAND, TEXAS, REGARDING INVESTMENTS OF PUBLIC FUNDS; ADDING VIVIAN IRWIN, FINANCE ADMINISTRATION AND TREASURY MANAGER, AND CRYSTAL GARCIA, COMPTROLLER, AS AUTHORIZED REPRESENTATIVES OF THE CITY OF MIDLAND ON THE TEXAS LOCAL GOVERNMENT INVESTMENT POOL, TEXPOOL/TEXPOOL PRIME; AND CHRISTY WEAKLAND, VIVIAN IRWIN, AND CRYSTAL GARCIA SHALL BE AUTHORIZED REPRESENTATIVES OF THE CITY OF MIDLAND (DISTRICT: NONE) (FINANCE) (PROVIDE SOUND GOVERNANCE & FISCAL MANAGEMENT)

Purpose:

Adding authorized representatives to the Texpool/Texpool Prime government investment pools to act as custodian of investments purchased.

Recommended City Council Action:

Approve

Fiscal Impact:

None.

Strategic Priority:

(Provide Sound Governance & Fiscal Management)

Discussion:

With the retirement of the city Treasurer, additional staff needs to be added to update processes and ensure proper internal controls over investments.

Morris Williams Jr.

City Manager's Office

RESOLUTION NO. _____

RESOLUTION AMENDING THE AUTHORIZED REPRESENTATIVES OF THE CITY OF MIDLAND, TEXAS, REGARDING INVESTMENTS OF PUBLIC FUNDS; ADDING VIVIAN IRWIN, FINANCE ADMINISTRATION AND TREASURY MANAGER, AND CRYSTAL GARCIA, COMPTROLLER, AS AUTHORIZED REPRESENTATIVES OF THE CITY OF MIDLAND ON THE TEXAS LOCAL GOVERNMENT INVESTMENT POOL, TEXPOOL/TEXPOOL PRIME; AND CHRISTY WEAKLAND, VIVIAN IRWIN, AND CRYSTAL GARCIA SHALL BE AUTHORIZED REPRESENTATIVES OF THE CITY OF MIDLAND

WHEREAS, the City of Midland, Texas, is a local government of the State of Texas and is empowered to delegate to a public funds investment pool the authority to invest funds and to act as custodian of investments purchased with local investment funds; and

WHEREAS, it is in the best interest of the City of Midland to invest local funds in investments that provide for the preservation and safety of principal, liquidity, and yield consistent with the Public Funds Investment Act; and

WHEREAS, the Texas Local Government Investment Pool ("TexPool/TexPool Prime"), a public funds investment pool, was created on behalf of entities whose investment objectives in order of priority are preservation and safety of principal, liquidity, and yield consistent with the Public Funds Investment Act;

NOW, THEREFORE, BE IT RESOLVED BY THE CITY COUNCIL OF THE CITY OF MIDLAND, TEXAS:

SECTION ONE. That the individuals identified in Section Four of this Resolution whose signatures appear on this Resolution are Authorized Representatives of the City of Midland and are each hereby authorized to transmit funds for investment in TexPool/TexPool Prime and are each further authorized to withdraw funds from time to time, to issue letters of instruction, and to take all other actions deemed necessary or appropriate for the investment of local funds.

SECTION TWO. That an Authorized Representative of the City of Midland may be deleted by a written instrument signed by two remaining Authorized Representatives

provided that the deleted Authorized Representative (1) is assigned job duties that no longer require access to the City's TexPool/Texpool Prime account or (2) is no longer employed by the City.

SECTION THREE. That the City of Midland may, by amending resolution signed by the City of Midland, add an Authorized Representative, provided that the additional Authorized Representative is an officer, employee, or agent of the City of Midland.

SECTION FOUR. That the Authorized Representatives of the City of Midland are:

Christy Weakland
Director of Finance
Phone Number 432-685-7210
Fax Number 432-685-7223
cweakland@midlandtexas.gov;

Vivian Irwin
Finance Administration and Treasury Manager
Phone Number 432-685-7532
Fax Number 432-685-7223
virwin@midlandtexas.gov; and

Crystal Garcia
Comptroller
Phone Number 432-685-7218
Fax Number 432-685-7223
crgarcia@midlandtexas.gov.

SECTION FIVE. That Vivian Irwin will have primary responsibility for performing transactions and receiving confirmations and monthly statements under the Participation Agreement.

SECTION SIX. That this Resolution and its authorization shall continue in full force and effect until amended or revoked by the City of Midland, and until TexPool Participant Services receives a copy of any such amendment or revocation.

On motion of Council member _____, seconded by Council member _____, the above and foregoing resolution was adopted by the City Council of the City of Midland at a regular meeting on the _____ day of _____, A.D., 2024, by the following vote:

Council members voting "AYE":

Council members voting "NAY":

_____
Lori Merritt Blong, Mayor

ATTEST:

_____
Marcia Bentley-German, City Secretary

RECOMMENDED AND APPROVED:

_____
Tommy Gonzalez, City Manager

APPROVED AS TO CONTENT AND COMPLETENESS:

_____
Christy Weakland, Director of Finance

_____
Vivian Irwin, Finance Administration and Treasury Manager

_____
Crystal Garcia, Comptroller

APPROVED ONLY AS TO FORM:

_____
John Ohnemiller, City Attorney

Resolution Authorizing Participation in the TexPool Investment Pools and Designating Authorized Representatives

WHEREAS, City of Midland, Location 77493 ("**Participant**") is a local government or state agency of the State of Texas and is empowered to delegate to the public funds investment pools the authority to invest funds and to act as custodian of investments purchased with local investment funds; and

WHEREAS, it is in the best interest of the Participant to invest local funds in investments that provide for the preservation and safety of principal, liquidity, and yield consistent with the Public Funds Investment Act; and

WHEREAS, the Texas Local Government Investment Pools ("**TexPool/TexPool Prime**"), public funds investment pools, were created on behalf of entities whose investment objectives in order of priority are preservation and safety of principal, liquidity, and yield consistent with the Public Funds Investment Act.

NOW THEREFORE, be it resolved as follows:

A. That Participant shall enter into a Participation Agreement to establish an account in its name in TexPool/TexPool Prime, for the purpose of transmitting local funds for investment in TexPool/TexPool Prime.

B. That the individuals, whose signatures appear in this Resolution, are authorized representatives of the Participant and are each hereby authorized to transmit funds for investment in TexPool/TexPool Prime and are each further authorized to withdraw funds from time to time, to issue letters of instruction, and to take all other actions deemed necessary or appropriate for the investment of local funds.

Authorized Representatives of the Participant

These individuals will be issued P.I.N. numbers to transact business via telephone with a Participant Service Representative.

1.
Signature: _____ | Telephone Number: 4326857210
Printed Name: Christy Weakland | Fax Number: _____
Title: Director of Finance | Email: _____

2.
Signature: _____ | Telephone Number: 4326857532
Printed Name: Vivian Irwin | Fax Number: 4326857223
Title: Finance Administration and Trsy Mgr | Email: _____

3.
Signature: _____ | Telephone Number: 4326857218
Printed Name: Crystal Garcia | Fax Number: _____
Title: Comptroller | Email: _____

4.
Signature: _____ | Telephone Number: _____
Printed Name: _____ | Fax Number: _____
Title: _____ | Email: _____

Form Continues on Next Page

Authorized Representatives of the Participant (continued)

5. Signature | Telephone Number
Printed Name | Fax Number
Title | Email

6. Signature | Telephone Number
Printed Name | Fax Number
Title | Email

List the name of the Authorized Representative provided above that will have primary responsibility for performing transactions and receiving confirmations and monthly statements under the Participation Agreement.

Vivian Irwin
Printed Name

In addition and at the option of the Participant, additional authorized representative(s) can be designated to perform inquiry only of selected information. This limited representative cannot make deposits or withdrawals. If the Participant desires to designate a representative with inquiry rights only, complete the following information.

1. Printed Name | Title
Telephone Number | Fax Number | Email

2. Printed Name | Title
Telephone Number | Fax Number | Email

3. Printed Name | Title
Telephone Number | Fax Number | Email

4. Printed Name | Title
Telephone Number | Fax Number | Email

5. Printed Name | Title
Telephone Number | Fax Number | Email

6. Printed Name | Title
Telephone Number | Fax Number | Email

Authorized Representatives of the Participant (continued)

C. That this resolution and its authorization shall continue in full force and effect until amended or revoked by the Participant, and until TexPool/TexPool Prime receives a copy of any such amendment or revocation.

This resolution is hereby introduced and adopted by the Participant at its regular/special meeting held on the

		day of		,	2	0			.

Document is to be signed by a Board Officer, Mayor or County Judge and attested by a Board Officer, City Secretary or County Clerk.

Name of Participant

SIGNED:

Signature

Printed Name

Title

ATTEST:

Signature

Printed Name

Title

Delivery Instructions

Please return this document to **TexPool Participant Services:**

Email: texpool@dstsystems.com

Fax: 866-839-3291

1-866-TEXPOOL (839-7665) • TexPool.com
© 2022 Federated Hermes, Inc.
G45340-20 (3/22)
Managed and Serviced by Federated Hermes

City Council Meeting

Item Number: 7

Meeting Date: September 24, 2024

To: City Council / City Manager

From: Erika Martinez, Manager, Purchasing

Subject: **MOTION AUTHORIZING THE EXECUTION OF CHANGE ORDER NUMBER 3 WITH REECE ALBERT, INC. REGARDING THE STATE HIGHWAY 158 AND SINCLAIR AVENUE INTERSECTION IMPROVEMENT PROJECT FOR THE ENGINEERING SERVICES DEPARTMENT; SAID CHANGE ORDER TO BE IN THE AMOUNT OF $898,248.46 AND TO PROVIDE FOR MODIFICATIONS REQUIRED TO ALIGN WITH TXDOT PAVEMENT DESIGN STANDARDS, IMPLEMENTATION OF TRAFFIC CONTROL MEASURES, AND MATERIAL OVERRUNS; AND TRANSFERRING THE SUM OF $11,416.53 FROM THE GENERAL FUND 2024 OPERATING BUDGET TO THE SINCLAIR AVENUE DRAINAGE PROJECT (900473-005) (DISTRICT 4) (GENERAL SERVICES) (STRENGTHEN AND SUSTAIN OUR INFRASTRUCTURE)**

Purpose:

Motion authorizing the execution of Change Order Number 3 with Reece Albert, Inc. regarding the State Highway 158 and Sinclair Avenue Intersection Improvement Project for the Engineering Services Department; said change order to be in the amount of $898,248.46 and to provide for modifications required to align with TxDOT pavement design standards, implementation of traffic control measures, and material overruns; and transferring the sum of $11,416.53 from the General Fund 2024 operating budget to the Sinclair Avenue Drainage Project (900473-005).

Recommended City Council Action:

Approve

Fiscal Impact:

$732,209.93 is available in the Sinclair Avenue drainage project (900473-005) and $154,622 is available in the Sinclair and SH 158 project (900445-005); $11,416.53 and will be transferred

from the General Fund 2024 operating budget to the Sinclair Avenue Drainage Project (900473-005).

Strategic Priority:

(Strengthen and Sustain our Infrastructure)

Discussion:

Resolution 2024-064 awarded a contract for the State Highway 158 and Sinclair Avenue Intersection Improvement Project to Reece Albert, Inc. of San Angelo, Texas at a total cost of $3,691,710.55; approving $738,342.11 for contingencies and approving $50,000.00 for project related expenses. Staff is requesting approval of a motion authorizing the execution of Change Order #1 with Reece Albert, Inc. of San Angelo, Texas, regarding the State Highway 158 and Sinclair Intersection Improvement Project; said change order to be in the amount of $898,248.46 for modifications required to align with TxDOT pavement design standards and implementation of traffic control measures, and material overruns for the Engineering Services Department.

Therefore, please consider a motion authorizing the execution of Change Order Number 3 with Reece Albert, Inc. regarding the State Highway 158 and Sinclair Avenue Intersection Improvement Project for the Engineering Services Department; said change order to be in the amount of $898,248.46 and to provide for modifications required to align with TxDOT pavement design standards, implementation of traffic control measures, and material overruns; and transferring the sum of $11,416.53 from the General Fund 2024 operating budget to the Sinclair Avenue Drainage Project (900473-005).

Morris William Jr.

City Manager's Office

INTEROFFICE MEMORANDUM

TO: Erika Martinez; City of Midland, Purchasing Manager

FROM: Bobby Wojciechowski; City of Midland, Assistant Director of Engineering Services

SUBJECT: SH158 & Sinclair Drainage Improvements Change Order Request

DATE: September 24, 2024

Please carry a motion to Council for the approval of Change Order #3 with Reece Albert, Inc. (Contract #1117) in an amount not to exceed $898,248.46. This change order pertains to the State Highway 158 and Sinclair Avenue Intersection Improvement Project, originally awarded under Resolution 2024-064 for $3,691,710.55, with additional contingencies and expenses approved.

Change Order #3 accounts for modifications required to meet TxDOT pavement design standards, traffic control measures, and material overruns as requested by the Engineering Services Department.

Funding in the amount of $732,209.93 is available in project account 900473-005, with an additional $154,622 available in project account 900445-005. The remaining $11,416.53 is available in the Traffic budget line 001083-57005.

cc: Gabe McClelland
Regina Stephenson

CONTRACT CHANGE ORDER

Order No. 3

Date: 9/13/2024

NAME OF PROJECT: Drainage Improvement Hwy 158 & Sinclair

PROJECT NUMBER: Contract # 1117

OWNER: City of Midland

CONTRACTOR: Reece Albert, Inc.

The following changes are hereby made to the CONTRACT DOCUMENTS:

Justification:

- Meeting TxDOT pavement design requirements
- Temporary traffic control to divert traffic
- Material overruns

Change to CONTRACT PRICE:

Original UNIT PRICE CONTRACT: $ $3,691,710.55

Current UNIT PRICE CONTRACT adjusted by previous CHANGE ORDER: $3,716,389.73

The UNIT PRICE CONTRACT due to this CHANGE ORDER will be:
☒ (increased) ☐(decreased) by: an amount not to exceed $898,248.46
The new UNIT PRICE CONTRACT including this CHANGE ORDER will be: $4,614,638.19

Change to CONTRACT TIME:

The CONTRACT TIME will be ☐ (increased) ☐(decreased) by: _____ calendar days.

Funding Source for CONTRACT CHANGE ORDER Increase:

☒ Account # 001083-57005 ($11,416.53)

☒ Project # 900473-005 ($732,209.93)
900445-005 ($154,622.00)

Approvals Required:
To be effective this Order must be approved by the Midland City Council if it changes the scope or objective of the PROJECT, or as may otherwise be required by the GENERAL PROVISIONS AND SUPPLEMENTAL CONDITIONS.

Requested by: _____

Approved by: _____

Accepted by: _____

City Council Meeting

Item Number: 8

Meeting Date: September 24, 2024

To: City Council / City Manager

From: Erika Martinez, Manager, Purchasing

Subject: RESOLUTION AUTHORIZING THE EXECUTION OF A FOURTH AMENDMENT TO THAT CERTAIN MASTER SERVICES AND PURCHASING AGREEMENT WITH AXON ENTERPRISES, INC., DATED SEPTEMBER 29, 2021, AS AMENDED, FOR BODY-WORN CAMERA SYSTEMS AND RELATED SERVICES FOR THE POLICE DEPARTMENT; AND AUTHORIZING PAYMENT FOR THE WORK AND SERVICES RENDERED PURSUANT TO SAID FOURTH AMENDMENT (DISTRICT: NONE) (GENERAL SERVICES) (SET THE STANDARD FOR A SAFE AND SECURE CITY)

Purpose:

Resolution authorizing the approval of the AXON Security Systems Amendment 4 with AXON Enterprise, Inc. through Buyboard contract 648-21, for a total cost of $4,165,000.00 for the Police Department.

Recommended City Council Action:

Approve

Fiscal Impact:

The five-year agreement totals $4,165,000.00, with annual payments of $833,000.00. Of each annual payment, $703,126.86 will be funded from the Technology Fund, and $129,873.14 will come from the Garage Fund. Funds are available in the FY2025 operating budgets of the Technology Fund and the Garage Fund.

Strategic Priority:

(Set the Standard for a Safe and Secure City)

Discussion:

Staff recommends amending a contract for the purchase of Body Worn Camera Systems for the Police Department with AXON Enterprise, Inc. through Buyboard contract 648-21. We are members of this cooperative and Subchapter F, Section 271.102 of the Local Government Code provides that a local government may participate in a cooperative purchasing program and that purchasing goods or services under Subchapter F satisfies any state law requiring the local government to seek competitive bids for those purchases. This amendment covers Auto LPR, Dronesense, Live streaming from body and body cameras, and an additional thirty-one (31) cameras. Please see the attached memo from Jennifer Frescaz, Chief Information Officer, for more information.

Therefore, please consider a resolution authorizing the approval of the AXON Security Systems Amendment 4 with AXON Enterprise, Inc. of Scottsdale, Arizona through Buyboard contract 648-21, for a total cost of $4,165,000.00.

Morris Williams Jr.

City Manager's Office

City Council Agenda

DATE: **September 09, 2024**

TO: Erika Martinez, Purchasing Manager

FROM: Gorgees Eskander, Deputy Chief Information Officer

CC: Jennifer Frescaz, Managing Director and Chief Information Officer

SUBJECT: Consider a resolution approving an amendment and five-year renewal of the Enterprise Agreement with AXON Enterprises, Inc., for a total cost of $4,165,000.00, through BuyBoard #648-21.

Strategic Goal: Set the Standard for a Safe and Secure City

Purpose:
Consider a resolution approving an amendment and five-year renewal of the Enterprise Agreement with AXON Enterprises, Inc., for a total cost of $4,165,000.00, through BuyBoard #648-21.

Discussion:
The renewed agreement with AXON Enterprises, Inc. will cover existing services such as body-worn cameras, dashcams, and interview room cameras, while also introducing new technology and equipment to improve police operations. This includes:

- **Automatic License Plate Recognition (ALPR) systems** to enhance vehicle tracking and identification capabilities.
- **Dronesense** technology to assist in drone operations, providing aerial support for police activities.
- **Live streaming** from body and dash cameras, enabling real-time monitoring and enhanced situational awareness for command staff.
- An additional **31 cameras** to outfit new vehicles in the fleet.

The agreement also includes secure cloud storage for video data, eliminating the need for on-premise storage, and regular software updates and hardware maintenance over the contract period. These additions and improvements will significantly strengthen the Police Department's technological capabilities.

The five-year agreement totals $4,165,000.00, with annual payments of $833,000.00. Of each annual payment, $703,126.86 will be funded from the ITSD Tech Fund, and $129,873.14 will come from the Garage Fund.

RESOLUTION NO. _____

RESOLUTION AUTHORIZING THE EXECUTION OF A FOURTH AMENDMENT TO THAT CERTAIN MASTER SERVICES AND PURCHASING AGREEMENT WITH AXON ENTERPRISES, INC., DATED SEPTEMBER 29, 2021, AS AMENDED, FOR BODY-WORN CAMERA SYSTEMS AND RELATED SERVICES FOR THE POLICE DEPARTMENT; AND AUTHORIZING PAYMENT FOR THE WORK AND SERVICES RENDERED PURSUANT TO SAID FOURTH AMENDMENT

WHEREAS, the City Council finds it to be in the public interest to authorize the execution of a fourth amendment to that certain Master Services and Purchasing Agreement with AXON Enterprise, Inc., dated September 29, 2021, as amended, for body-worn camera systems and related services for the Police Department.

NOW, THEREFORE, BE IT RESOLVED BY THE CITY COUNCIL OF THE CITY OF MIDLAND, TEXAS:

SECTION ONE. That the City Manager or his designee is hereby authorized and directed to execute, on behalf of the City of Midland, a fourth amendment to that certain Master Services and Purchasing Agreement with AXON Enterprise, Inc., dated September 29, 2021, as amended, for body-worn camera systems and related services for the Police Department. Said fourth amendment being in a form substantially similar to Exhibit A, which is attached hereto and incorporated herein for all purposes.

SECTION TWO. That the City Comptroller is hereby authorized and directed to pay AXON Enterprise, Inc., pursuant to the terms of the above-referenced agreement, as amended, from funds available in FY2025 operating budgets of the Technology Fund and the Garage Fund upon receipt of proper invoices or statements approved by the City Manager.

On motion of Council member _____, seconded by Council member _____, the above and foregoing resolution was adopted by the City Council of the City of Midland at a regular meeting on the _____ day of _____, A.D., 2024, by

the following vote:

Council members voting "AYE":

Council members voting "NAY":

_____
Lori Merritt Blong, Mayor

ATTEST:

_____
Marcia Bentley-German, City Secretary

RECOMMENDED AND APPROVED:

_____
Tommy Gonzalez, City Manager

APPROVED AS TO CONTENT
AND COMPLETENESS:

_____
Regina Stephenson, General Services Director

APPROVED AS TO FORM ONLY:

_____
John Ohnemiller, City Attorney

Docusign Envelope ID: 6BA06514-9ACF-41E2-B678-0A77D6423B7A

This FOURTH AMENDMENT TO MASTER SERVICES AND PURCHASING AGREEMENT ("**Fourth Amendment**") dated 9/10/2024 | 12:40 PM MST, 2024 ("**Fourth Amendment Effective Date**") to the Agreement dated September 29, 2021 ("**Agreement**"), as amended, between AXON ENTERPRISE, INC., a Delaware corporation, *fka* TASER International Inc. ("**Axon**") and City of Midland ("**Agency**") is entered into between the parties to amend the Agreement as set forth in this Fourth Amendment. Axon and Agency may also be referred to in this Fourth Amendment individually as "Party" or collectively as "Parties." To the extent this Fourth Amendment contains terms and conditions that differ from those contained in the Agreement, this Fourth Amendment shall control. The Parties agree that a concept or principle covered in this Fourth Amendment shall apply and be incorporated into all other provisions of the Agreement in which the concept or principle is also applicable, notwithstanding the absence of any specific cross-reference thereto. All capitalized and defined terms referenced, but not defined, in this Fourth Amendment shall have the meanings assigned to them in the Agreement.

NOW, THEREFORE, in consideration of the mutual covenants and agreements contained in this Fourth Amendment and the Agreement, the Parties hereby agree as follows:

1. To add and incorporate **Exhibit E: Quote: Q-561381-45527.897DT**
2. To add and incorporate the following language into **Exhibit F** under the **Professional Services Appendix**:

1. **Axon Air, On-Site Training.** Axon Air, On-Site training includes advance remote project planning and configuration support and one (1) day of on-site Services and a professional services manager to work closely with Customer to assess Customer's deployment and determine which Services are appropriate. If Customer's requires more than one (1) day of on-site Services, Customer must purchase additional on-site Services. The Axon Air, On-Site training options include:

System set up and configuration (Remote Support) • Instructor-led setup of Axon Air App (ASDS) • Configure Customer settings based on Customer need • Configure drone controller • Troubleshoot IT issues with Axon Evidence
Axon instructor training (Train the Trainer) Training for Customer's in-house instructors who can support Customer's Axon Air and Axon Evidence training needs after Axon's has fulfilled its contracted on-site obligations
Classroom and practical training sessions Step-by-step explanation and assistance for Customer's configuration of Axon Respond+ livestreaming functionality, basic operation, and best practices

2. **Axon Air, Virtual Training.** Axon Air, Virtual training includes all items in the Axon Air, On-Site Training Package, except the practical training session, with the Axon Instructor training for up to four hours virtually.

3. To add and incorporate **Exhibit I: Respond Appendix**
4. To add and incorporate **Exhibit J: Add-On Services Appendix**
5. Except as set forth in this Fourth Amendment, the terms and provisions of the Agreement shall remain in full force and effect.
6. The signatories to this Fourth Amendment represent and warrant that they have full rights, power and authority to enter into and bind his or her, as the case may be, respective Party to the obligations set forth in this Fourth Amendment without further consent or approval of any kind.

IN WITNESS WHEREOF, each Party, by and through its respective representative, has duly executed and delivered this Fourth Amendment as of the Fourth Amendment Effective Date.

AXON: AXON ENTERPRISE, INC., a Delaware corporation

DocuSigned by:
Robert Driscoll
55DAEBB131A4424...

By: _____

Robert Driscoll

Name: _____

Deputy General Counsel

Title: _____

9/10/2024 | 12:40 PM MST

Date: _____

Agency: CITY OF MIDLAND- TX

By: _____

Name: _____

Title: _____

Date: _____

Docusign Envelope ID: 6BA06514-9ACF-41E2-B678-0A77D6423B7A

Exhibit E – Quote

See Next Page

Docusign Envelope ID: 6BA06514-9ACF-41E2-B678-0A77D6423B7A

Axon Enterprise, Inc.
17800 N 85th St.
Scottsdale, Arizona 85255
United States
VAT: 86-0741227
Domestic: (800) 978-2737
International: +1.800.978.2737

Q-561381-45527.897DT

Issued: 08/23/2024
Quote Expiration: 09/27/2024
Estimated Contract Start Date: 10/15/2024
Account Number: 465613
Payment Terms: N30
Delivery Method:

SHIP TO	BILL TO
Midland Police Dept. - TX 601 N Loraine St Midland, TX 79701-4759 USA	Midland Police Dept. - TX 601 N Loraine St Midland TX 79701-4759 USA Email:

SALES REPRESENTATIVE	PRIMARY CONTACT
Danny Thielen Phone: (480) 434-8810 Email: dthielen@axon.com Fax:	Brian Rackow Phone: (432) 685-1689 Email: brackow@midlandtexas.gov Fax:

Quote Summary

Program Length	60 Months
TOTAL COST	$4,165,000.00
ESTIMATED TOTAL W/ TAX	$4,165,000.00

Discount Summary

Average Savings Per Year	$125,654.02
TOTAL SAVINGS	$628,270.09

Docusign Envelope ID: 6BA06514-9ACF-41E2-B678-0A77D6423B7A

Payment Summary

Date	Subtotal	Tax	Total
Sep 2024	$833,000.00	$0.00	$833,000.00
Sep 2025	$833,000.00	$0.00	$833,000.00
Sep 2026	$833,000.00	$0.00	$833,000.00
Sep 2027	$833,000.00	$0.00	$833,000.00
Sep 2028	$833,000.00	$0.00	$833,000.00
Total	**$4,165,000.00**	**$0.00**	**$4,165,000.00**

Quote Unbundled Price:	**$4,793,270.09**
Quote List Price:	**$4,392,302.48**
Quote Subtotal:	**$4,165,000.00**

Pricing

All deliverables are detailed in Delivery Schedules section lower in proposal

Item	Description	Qty	Term	Unbundled	List Price	Net Price	Subtotal	Tax	Total
Program									
80462	TRUE UP - FLEET 3 ADVANCED WITH TAP	31	3		$108.00	$0.00	$0.00	$0.00	$0.00
73352	TRUE UP - BWC HARDWARE FINANCING	10	3		$23.30	$23.30	$699.00	$0.00	$699.00
100553	TRANSFER CREDIT - SOFTWARE AND SERVICES	1			$1.00	$17,083.36	$17,083.36	$0.00	$17,083.36
100552	TRANSFER CREDIT - GOODS	1			$1.00	$273,281.60	$273,281.60	$0.00	$273,281.60
Fleet3ARe	Fleet 3 Advanced Renewal	175	60	$202.68	$189.57	$166.32	$1,746,360.00	$0.00	$1,746,360.00
BWCUwTAP	BWC Unlimited with TAP	146	60	$121.48	$99.66	$99.66	$873,021.60	$0.00	$873,021.60
BWCUwTAP	BWC Unlimited with TAP	9	57	$120.44	$99.66	$99.66	$51,125.58	$0.00	$51,125.58
CLASS1UAS	AXON AIR, CLASS 1 UAS BUNDLE	1	60	$183.34	$183.34	$183.34	$11,000.40	$0.00	$11,000.40
CLASS2UAS	AXON AIR, CLASS 2 UAS BUNDLE	5	60	$283.34	$283.34	$283.34	$85,002.00	$0.00	$85,002.00
Fleet3A	Fleet 3 Advanced	31	57	$289.38	$254.57	$198.07	$349,989.69	$0.00	$349,989.69
A la Carte Hardware									
H00001	AB4 Camera Bundle	9			$849.00	$849.00	$7,641.00	$0.00	$7,641.00
H00002	AB4 Multi Bay Dock Bundle	11			$1,638.90	$1,638.90	$18,027.90	$0.00	$18,027.90
F00011	BUNDLE - FLEET CRADLEPOINT R920 SINGLE MODEM KIT	31			$1,713.00	$0.00	$0.00	$0.00	$0.00
A la Carte Software									
73618	AXON COMMUNITY REQUEST	9	57		$10.79	$0.00	$0.00	$0.00	$0.00
73618	AXON COMMUNITY REQUEST	146	60		$10.85	$0.00	$0.00	$0.00	$0.00
73682	AXON EVIDENCE - AUTO TAGGING LICENSE	9	57		$10.79	$1.19	$612.90	$0.00	$612.90
50043	AXON INTERVIEW - STREAMING SERVER MAINTENANCE - PER SERVER	2	60		$32.98	$32.98	$3,957.60	$0.00	$3,957.60
100584	AXON AIR - ADVANCED STREAMING ADD-ON	5	60		$25.00	$25.00	$7,500.00	$0.00	$7,500.00
50039	AXON INTERVIEW - CLIENT SOFTWARE - MAINT. PER TOUCH PANEL	6	60		$28.21	$28.21	$10,155.60	$0.00	$10,155.60
100586	AXON AIR - API INTEGRATIONS ADD-ON	5	60		$41.67	$41.67	$12,501.00	$0.00	$12,501.00
100583	AXON AIR - UAS LICENSE - COPILOT FOR DJI AVATA	5	60		$50.00	$50.00	$15,000.00	$0.00	$15,000.00
100112	AXON AIR - EVIDENCE.COM LICENSE - PILOT DATA	8	60		$33.85	$33.85	$16,248.00	$0.00	$16,248.00
50045	AXON EVIDENCE - STORAGE - INTERVIEW ROOM UNLIMITED	6	60		$111.75	$111.75	$40,230.00	$0.00	$40,230.00
73682	AXON EVIDENCE - AUTO TAGGING LICENSE	146	60		$10.85	$10.85	$95,046.00	$0.00	$95,046.00
73638	AXON STANDARDS - LICENSE	200	58		$10.81	$10.81	$125,396.00	$0.00	$125,396.00
73680	AXON RESPOND PLUS - LICENSE	155	60		$21.48	$21.48	$199,764.00	$0.00	$199,764.00
ProLicense	Pro License Bundle	50	60		$43.40	$43.33	$129,990.00	$0.00	$129,990.00
A la Carte Services									
100159	AXON FLEET 3 - SERVICES - ALPR API INTEGRATION	1			$3,000.00	$0.00	$0.00	$0.00	$0.00
101078	AXON AIR - RTC VIRTUAL ONBOARDING	1			$1,666.67	$1,666.67	$1,666.67	$0.00	$1,666.67
73896	AXON STANDARDS - IMPLEMENTATION SERVICE	1			$30,000.00	$28,155.70	$28,155.70	$0.00	$28,155.70
100560	AXON EVIDENCE - PSO - DATA CONVERSION/MIGRATION	1			$35,000.00	$35,000.00	$35,000.00	$0.00	$35,000.00
A la Carte Warranties									
73390	AXON FLEET - CRADLEPOINT ROUTER TRANSFERRED WARRANTY	145	44		$0.00	$0.00	$0.00	$0.00	$0.00

73390	AXON FLEET - CRADLEPOINT ROUTER TRANSFERRED WARRANTY	30	54	$0.00	$0.00	$0.00	$0.00	$0.00
50448	AXON INTERVIEW - EXT WARRANTY	6	60	$29.29	$29.29	$10,544.40	$0.00	$10,544.40
Total						**$4,165,000.00**	**$0.00**	**$4,165,000.00**

Delivery Schedule

Hardware

Bundle	Item	Description	QTY	Shipping Location	Estimated Delivery Date
AB4 Camera Bundle	100147	AXON BODY 4 - CAMERA - NA US FIRST RESPONDER BLK RAPIDLOCK	9	1	12/15/2024
AB4 Camera Bundle	100466	AXON BODY 4 - CABLE - USB-C TO USB-C	10	1	12/15/2024
AB4 Camera Bundle	74028	AXON BODY - MOUNT - WING CLIP RAPIDLOCK	10	1	12/15/2024
AB4 Multi Bay Dock Bundle	100206	AXON BODY 4 - 8 BAY DOCK	11	1	12/15/2024
AB4 Multi Bay Dock Bundle	70033	AXON - DOCK WALL MOUNT - BRACKET ASSY	11	1	12/15/2024
AB4 Multi Bay Dock Bundle	71019	AXON BODY - DOCK POWERCORD - NORTH AMERICA	11	1	12/15/2024
BUNDLE - FLEET CRADLEPOINT R920 SINGLE MODEM KIT	100989	AXON FLEET - CRADLEPOINT R920-C7A+5YR NETCLOUD	31	1	12/15/2024
BUNDLE - FLEET CRADLEPOINT R920 SINGLE MODEM KIT	71200	AXON FLEET - AIRGAIN ANT - 5-IN-1 2LTE 2WIFI 1GNSS BL	31	1	12/15/2024
Fleet 3 Advanced	70112	AXON SIGNAL - SIGNAL UNIT	31	1	12/15/2024
Fleet 3 Advanced	72036	AXON FLEET 3 - STANDARD 2 CAMERA KIT	31	1	12/15/2024
Fleet 3 Advanced	72036	AXON FLEET 3 - STANDARD 2 CAMERA KIT	1	1	12/15/2024
BWC Unlimited with TAP	73309	AXON BODY - TAP REFRESH 1 - CAMERA	150	1	06/15/2026
BWC Unlimited with TAP	73309	AXON BODY - TAP REFRESH 1 - CAMERA	9	1	06/15/2026
BWC Unlimited with TAP	73689	AXON BODY - TAP REFRESH 1 - DOCK MULTI BAY	1	1	06/15/2026
BWC Unlimited with TAP	73689	AXON BODY - TAP REFRESH 1 - DOCK MULTI BAY	19	1	06/15/2026
Fleet 3 Advanced Renewal	72040	AXON FLEET - TAP REFRESH 1 - 2 CAMERA KIT	175	1	05/31/2028
Fleet 3 Advanced Renewal	72040	AXON FLEET - TAP REFRESH 1 - 2 CAMERA KIT	5	1	05/31/2028
BWC Unlimited with TAP	73310	AXON BODY - TAP REFRESH 2 - CAMERA	150	1	12/15/2028
BWC Unlimited with TAP	73310	AXON BODY - TAP REFRESH 2 - CAMERA	9	1	12/15/2028
BWC Unlimited with TAP	73688	AXON BODY - TAP REFRESH 2 - DOCK MULTI BAY	19	1	12/15/2028
BWC Unlimited with TAP	73688	AXON BODY - TAP REFRESH 2 - DOCK MULTI BAY	1	1	12/15/2028
Fleet 3 Advanced	72040	AXON FLEET - TAP REFRESH 1 - 2 CAMERA KIT	31	1	09/15/2029
Fleet 3 Advanced	72040	AXON FLEET - TAP REFRESH 1 - 2 CAMERA KIT	1	1	09/15/2029

Software

Bundle	Item	Description	QTY	Estimated Start Date	Estimated End Date
AXON AIR, CLASS 1 UAS BUNDLE	100579	AXON AIR - UAS LICENSE - CLASS 1	1	10/15/2024	10/14/2029
AXON AIR, CLASS 1 UAS BUNDLE	100584	AXON AIR - ADVANCED STREAMING ADD-ON	1	10/15/2024	10/14/2029
AXON AIR, CLASS 1 UAS BUNDLE	100586	AXON AIR - API INTEGRATIONS ADD-ON	1	10/15/2024	10/14/2029
AXON AIR, CLASS 2 UAS BUNDLE	100580	AXON AIR - UAS LICENSE - CLASS 2	5	10/15/2024	10/14/2029
AXON AIR, CLASS 2 UAS BUNDLE	100584	AXON AIR - ADVANCED STREAMING ADD-ON	5	10/15/2024	10/14/2029
AXON AIR, CLASS 2 UAS BUNDLE	100586	AXON AIR - API INTEGRATIONS ADD-ON	5	10/15/2024	10/14/2029
BWC Unlimited with TAP	73686	AXON EVIDENCE - STORAGE - UNLIMITED (AXON DEVICE)	146	10/15/2024	10/14/2029
BWC Unlimited with TAP	73746	AXON EVIDENCE - ECOM LICENSE - PRO	146	10/15/2024	10/14/2029
Fleet 3 Advanced Renewal	80400	AXON EVIDENCE - FLEET VEHICLE LICENSE	175	10/15/2024	10/14/2029
Fleet 3 Advanced Renewal	80401	AXON FLEET 3 - ALPR LICENSE - 1 CAMERA	175	10/15/2024	10/14/2029
Fleet 3 Advanced Renewal	80402	AXON RESPOND - LICENSE - FLEET 3	175	10/15/2024	10/14/2029
Fleet 3 Advanced Renewal	80410	AXON EVIDENCE - STORAGE - FLEET 1 CAMERA UNLIMITED	350	10/15/2024	10/14/2029

Software

Bundle	Item	Description	QTY	Estimated Start Date	Estimated End Date
Pro License Bundle	73683	AXON EVIDENCE - STORAGE - 10GB A LA CARTE	150	10/15/2024	10/14/2029
Pro License Bundle	73746	AXON EVIDENCE - ECOM LICENSE - PRO	50	10/15/2024	10/14/2029
A la Carte	100112	AXON AIR - EVIDENCE.COM LICENSE - PILOT DATA	8	10/15/2024	10/14/2029
A la Carte	100583	AXON AIR - UAS LICENSE - COPILOT FOR DJI AVATA	5	10/15/2024	10/14/2029
A la Carte	100584	AXON AIR - ADVANCED STREAMING ADD-ON	5	10/15/2024	10/14/2029
A la Carte	100586	AXON AIR - API INTEGRATIONS ADD-ON	5	10/15/2024	10/14/2029
A la Carte	50039	AXON INTERVIEW - CLIENT SOFTWARE - MAINT. PER TOUCH PANEL	6	10/15/2024	10/14/2029
A la Carte	50043	AXON INTERVIEW - STREAMING SERVER MAINTENANCE - PER SERVER	2	10/15/2024	10/14/2029
A la Carte	50045	AXON EVIDENCE - STORAGE - INTERVIEW ROOM UNLIMITED	6	10/15/2024	10/14/2029
A la Carte	73618	AXON COMMUNITY REQUEST	146	10/15/2024	10/14/2029
A la Carte	73680	AXON RESPOND PLUS - LICENSE	155	10/15/2024	10/14/2029
A la Carte	73682	AXON EVIDENCE - AUTO TAGGING LICENSE	146	10/15/2024	10/14/2029
A la Carte	73638	AXON STANDARDS - LICENSE	200	12/15/2024	10/14/2029
BWC Unlimited with TAP	73686	AXON EVIDENCE - STORAGE - UNLIMITED (AXON DEVICE)	9	01/15/2025	10/14/2029
BWC Unlimited with TAP	73746	AXON EVIDENCE - ECOM LICENSE - PRO	9	01/15/2025	10/14/2029
Fleet 3 Advanced	80400	AXON EVIDENCE - FLEET VEHICLE LICENSE	31	01/15/2025	10/14/2029
Fleet 3 Advanced	80401	AXON FLEET 3 - ALPR LICENSE - 1 CAMERA	31	01/15/2025	10/14/2029
Fleet 3 Advanced	80402	AXON RESPOND - LICENSE - FLEET 3	31	01/15/2025	10/14/2029
Fleet 3 Advanced	80410	AXON EVIDENCE - STORAGE - FLEET 1 CAMERA UNLIMITED	62	01/15/2025	10/14/2029
A la Carte	73618	AXON COMMUNITY REQUEST	9	01/15/2025	10/14/2029
A la Carte	73682	AXON EVIDENCE - AUTO TAGGING LICENSE	9	01/15/2025	10/14/2029

Services

Bundle	Item	Description	QTY
BUNDLE - FLEET CRADLEPOINT R920 SINGLE MODEM KIT	100738	AXON FLEET 3 - SIM INSERTION - VZW 4FF	31
Fleet 3 Advanced	73391	AXON FLEET 3 - DEPLOYMENT PER VEHICLE - NOT OVERSIZED	31
A la Carte	100159	AXON FLEET 3 - SERVICES - ALPR API INTEGRATION	1
A la Carte	100560	AXON EVIDENCE - PSO - DATA CONVERSION/MIGRATION	1
A la Carte	101078	AXON AIR - RTC VIRTUAL ONBOARDING	1
A la Carte	73896	AXON STANDARDS - IMPLEMENTATION SERVICE	1

Warranties

Bundle	Item	Description	QTY	Estimated Start Date	Estimated End Date
A la Carte	50448	AXON INTERVIEW - EXT WARRANTY	6	10/15/2024	10/14/2029
A la Carte	73390	AXON FLEET - CRADLEPOINT ROUTER TRANSFERRED WARRANTY	30	10/15/2024	03/31/2029
A la Carte	73390	AXON FLEET - CRADLEPOINT ROUTER TRANSFERRED WARRANTY	145	10/15/2024	05/31/2028
BWC Unlimited with TAP	80464	AXON BODY - TAP WARRANTY - CAMERA	146	09/15/2025	10/14/2029
BWC Unlimited with TAP	80464	AXON BODY - TAP WARRANTY - CAMERA	4	09/15/2025	10/14/2029
BWC Unlimited with TAP	80465	AXON BODY - TAP WARRANTY - MULTI BAY DOCK	19	09/15/2025	10/14/2029
Fleet 3 Advanced Renewal	80495	AXON FLEET 3 - EXT WARRANTY - 2 CAMERA KIT	175	09/15/2025	10/14/2029
Fleet 3 Advanced Renewal	80495	AXON FLEET 3 - EXT WARRANTY - 2 CAMERA KIT	5	09/15/2025	10/14/2029
BWC Unlimited with TAP	80464	AXON BODY - TAP WARRANTY - CAMERA	9	12/15/2025	10/14/2029
BWC Unlimited with TAP	80465	AXON BODY - TAP WARRANTY - MULTI BAY DOCK	1	12/15/2025	10/14/2029
Fleet 3 Advanced	80379	AXON SIGNAL - EXT WARRANTY - SIGNAL UNIT	31	12/15/2025	10/14/2029
Fleet 3 Advanced	80495	AXON FLEET 3 - EXT WARRANTY - 2 CAMERA KIT	1	12/15/2025	10/14/2029
Fleet 3 Advanced	80495	AXON FLEET 3 - EXT WARRANTY - 2 CAMERA KIT	31	12/15/2025	10/14/2029

Docusign Envelope ID: 6BA06514-9ACF-41E2-B678-0A77D6423B7A

Shipping Locations

Location Number	Street	City	State	Zip	Country
1	601 N Loraine St	Midland	TX	79701-4759	USA

Payment Details

Sep 2024

Invoice Plan	Item	Description	Qty	Subtotal	Tax	Total
Transfer Debits Upfront	100552	TRANSFER CREDIT - GOODS	1	$273,281.60	$0.00	$273,281.60
Transfer Debits Upfront	100553	TRANSFER CREDIT - SOFTWARE AND SERVICES	1	$17,083.36	$0.00	$17,083.36
Upfront Hardware	H00001	AB4 Camera Bundle	9	$7,641.00	$0.00	$7,641.00
Upfront Hardware	H00002	AB4 Multi Bay Dock Bundle	11	$18,027.90	$0.00	$18,027.90
Year 1	100112	AXON AIR - EVIDENCE.COM LICENSE - PILOT DATA	8	$2,182.32	$0.00	$2,182.32
Year 1	100560	AXON EVIDENCE - PSO - DATA CONVERSION/MIGRATION	1	$4,700.95	$0.00	$4,700.95
Year 1	100583	AXON AIR - UAS LICENSE - COPILOT FOR DJI AVATA	5	$2,014.69	$0.00	$2,014.69
Year 1	100584	AXON AIR - ADVANCED STREAMING ADD-ON	5	$1,007.35	$0.00	$1,007.35
Year 1	100586	AXON AIR - API INTEGRATIONS ADD-ON	5	$1,679.05	$0.00	$1,679.05
Year 1	101078	AXON AIR - RTC VIRTUAL ONBOARDING	1	$223.86	$0.00	$223.86
Year 1	50039	AXON INTERVIEW - CLIENT SOFTWARE - MAINT. PER TOUCH PANEL	6	$1,364.03	$0.00	$1,364.03
Year 1	50043	AXON INTERVIEW - STREAMING SERVER MAINTENANCE - PER SERVER	2	$531.56	$0.00	$531.56
Year 1	50045	AXON EVIDENCE - STORAGE - INTERVIEW ROOM UNLIMITED	6	$5,403.41	$0.00	$5,403.41
Year 1	50448	AXON INTERVIEW - EXT WARRANTY	6	$1,416.25	$0.00	$1,416.25
Year 1	73352	TRUE UP - BWC HARDWARE FINANCING	10	$93.88	$0.00	$93.88
Year 1	73638	AXON STANDARDS - LICENSE	200	$16,842.31	$0.00	$16,842.31
Year 1	73680	AXON RESPOND PLUS - LICENSE	155	$26,830.90	$0.00	$26,830.90
Year 1	73682	AXON EVIDENCE - AUTO TAGGING LICENSE	146	$12,765.91	$0.00	$12,765.91
Year 1	73682	AXON EVIDENCE - AUTO TAGGING LICENSE	9	$82.32	$0.00	$82.32
Year 1	73896	AXON STANDARDS - IMPLEMENTATION SERVICE	1	$3,781.68	$0.00	$3,781.68
Year 1	BWCUwTAP	BWC Unlimited with TAP	9	$6,866.83	$0.00	$6,866.83
Year 1	BWCUwTAP	BWC Unlimited with TAP	146	$117,258.14	$0.00	$117,258.14
Year 1	CLASS1UAS	AXON AIR, CLASS 1 UAS BUNDLE	1	$1,477.50	$0.00	$1,477.50
Year 1	CLASS2UAS	AXON AIR, CLASS 2 UAS BUNDLE	5	$11,416.88	$0.00	$11,416.88
Year 1	Fleet3A	Fleet 3 Advanced	31	$47,008.14	$0.00	$47,008.14
Year 1	Fleet3ARe	Fleet 3 Advanced Renewal	175	$234,558.83	$0.00	$234,558.83
Year 1	ProLicense	Pro License Bundle	50	$17,459.35	$0.00	$17,459.35
Total				**$833,000.00**	**$0.00**	**$833,000.00**

Oct 2024

Invoice Plan	Item	Description	Qty	Subtotal	Tax	Total
Invoice Upon Fulfillment	100159	AXON FLEET 3 - SERVICES - ALPR API INTEGRATION	1	$0.00	$0.00	$0.00
Invoice Upon Fulfillment	73390	AXON FLEET - CRADLEPOINT ROUTER TRANSFERRED WARRANTY	30	$0.00	$0.00	$0.00
Invoice Upon Fulfillment	73390	AXON FLEET - CRADLEPOINT ROUTER TRANSFERRED WARRANTY	145	$0.00	$0.00	$0.00
Invoice Upon Fulfillment	73618	AXON COMMUNITY REQUEST	146	$0.00	$0.00	$0.00
Invoice Upon Fulfillment	80462	TRUE UP - FLEET 3 ADVANCED WITH TAP	31	$0.00	$0.00	$0.00
Total				**$0.00**	**$0.00**	**$0.00**

Dec 2024

Invoice Plan	Item	Description	Qty	Subtotal	Tax	Total
Invoice Upon Fulfillment	F00011	BUNDLE - FLEET CRADLEPOINT R920 SINGLE MODEM KIT	31	$0.00	$0.00	$0.00
Invoice Upon Fulfillment	H00001	AB4 Camera Bundle	9	$0.00	$0.00	$0.00
Total				**$0.00**	**$0.00**	**$0.00**

Jan 2025

Invoice Plan	Item	Description	Qty	Subtotal	Tax	Total
Invoice Upon Fulfillment	73618	AXON COMMUNITY REQUEST	9	$0.00	$0.00	$0.00
Total				**$0.00**	**$0.00**	**$0.00**

Sep 2025

Invoice Plan	Item	Description	Qty	Subtotal	Tax	Total
Year 2	100112	AXON AIR - EVIDENCE.COM LICENSE - PILOT DATA	8	$3,516.42	$0.00	$3,516.42
Year 2	100560	AXON EVIDENCE - PSO - DATA CONVERSION/MIGRATION	1	$7,574.76	$0.00	$7,574.76
Year 2	100583	AXON AIR - UAS LICENSE - COPILOT FOR DJI AVATA	5	$3,246.33	$0.00	$3,246.33
Year 2	100584	AXON AIR - ADVANCED STREAMING ADD-ON	5	$1,623.16	$0.00	$1,623.16
Year 2	100586	AXON AIR - API INTEGRATIONS ADD-ON	5	$2,705.49	$0.00	$2,705.49
Year 2	101078	AXON AIR - RTC VIRTUAL ONBOARDING	1	$360.70	$0.00	$360.70
Year 2	50039	AXON INTERVIEW - CLIENT SOFTWARE - MAINT. PER TOUCH PANEL	6	$2,197.89	$0.00	$2,197.89
Year 2	50043	AXON INTERVIEW - STREAMING SERVER MAINTENANCE - PER SERVER	2	$856.51	$0.00	$856.51
Year 2	50045	AXON EVIDENCE - STORAGE - INTERVIEW ROOM UNLIMITED	6	$8,706.65	$0.00	$8,706.65
Year 2	50448	AXON INTERVIEW - EXT WARRANTY	6	$2,282.04	$0.00	$2,282.04
Year 2	73352	TRUE UP - BWC HARDWARE FINANCING	10	$151.28	$0.00	$151.28
Year 2	73638	AXON STANDARDS - LICENSE	200	$27,138.42	$0.00	$27,138.42
Year 2	73680	AXON RESPOND PLUS - LICENSE	155	$43,233.28	$0.00	$43,233.28
Year 2	73682	AXON EVIDENCE - AUTO TAGGING LICENSE	146	$20,570.02	$0.00	$20,570.02
Year 2	73682	AXON EVIDENCE - AUTO TAGGING LICENSE	9	$132.64	$0.00	$132.64
Year 2	73896	AXON STANDARDS - IMPLEMENTATION SERVICE	1	$6,093.51	$0.00	$6,093.51
Year 2	BWCUwTAP	BWC Unlimited with TAP	9	$11,064.69	$0.00	$11,064.69
Year 2	BWCUwTAP	BWC Unlimited with TAP	146	$188,940.85	$0.00	$188,940.85
Year 2	CLASS1UAS	AXON AIR, CLASS 1 UAS BUNDLE	1	$2,380.73	$0.00	$2,380.73
Year 2	CLASS2UAS	AXON AIR, CLASS 2 UAS BUNDLE	5	$18,396.28	$0.00	$18,396.28
Year 2	Fleet3A	Fleet 3 Advanced	31	$75,745.38	$0.00	$75,745.38
Year 2	Fleet3ARe	Fleet 3 Advanced Renewal	175	$377,950.31	$0.00	$377,950.31
Year 2	ProLicense	Pro License Bundle	50	$28,132.66	$0.00	$28,132.66
Total				**$833,000.00**	**$0.00**	**$833,000.00**

Sep 2026

Invoice Plan	Item	Description	Qty	Subtotal	Tax	Total
Year 3	100112	AXON AIR - EVIDENCE.COM LICENSE - PILOT DATA	8	$3,516.42	$0.00	$3,516.42
Year 3	100560	AXON EVIDENCE - PSO - DATA CONVERSION/MIGRATION	1	$7,574.76	$0.00	$7,574.76
Year 3	100583	AXON AIR - UAS LICENSE - COPILOT FOR DJI AVATA	5	$3,246.33	$0.00	$3,246.33
Year 3	100584	AXON AIR - ADVANCED STREAMING ADD-ON	5	$1,623.16	$0.00	$1,623.16
Year 3	100586	AXON AIR - API INTEGRATIONS ADD-ON	5	$2,705.49	$0.00	$2,705.49
Year 3	101078	AXON AIR - RTC VIRTUAL ONBOARDING	1	$360.70	$0.00	$360.70
Year 3	50039	AXON INTERVIEW - CLIENT SOFTWARE - MAINT. PER TOUCH PANEL	6	$2,197.89	$0.00	$2,197.89
Year 3	50043	AXON INTERVIEW - STREAMING SERVER MAINTENANCE - PER SERVER	2	$856.51	$0.00	$856.51
Year 3	50045	AXON EVIDENCE - STORAGE - INTERVIEW ROOM UNLIMITED	6	$8,706.65	$0.00	$8,706.65
Year 3	50448	AXON INTERVIEW - EXT WARRANTY	6	$2,282.04	$0.00	$2,282.04
Year 3	73352	TRUE UP - BWC HARDWARE FINANCING	10	$151.28	$0.00	$151.28
Year 3	73638	AXON STANDARDS - LICENSE	200	$27,138.42	$0.00	$27,138.42

Docusign Envelope ID: 6BA06514-9ACF-41E2-B678-0A77D6423B7A

Sep 2026

Invoice Plan	Item	Description	Qty	Subtotal	Tax	Total
Year 3	73680	AXON RESPOND PLUS - LICENSE	155	$43,233.28	$0.00	$43,233.28
Year 3	73682	AXON EVIDENCE - AUTO TAGGING LICENSE	9	$132.64	$0.00	$132.64
Year 3	73682	AXON EVIDENCE - AUTO TAGGING LICENSE	146	$20,570.02	$0.00	$20,570.02
Year 3	73896	AXON STANDARDS - IMPLEMENTATION SERVICE	1	$6,093.51	$0.00	$6,093.51
Year 3	BWCUwTAP	BWC Unlimited with TAP	9	$11,064.69	$0.00	$11,064.69
Year 3	BWCUwTAP	BWC Unlimited with TAP	146	$188,940.85	$0.00	$188,940.85
Year 3	CLASS1UAS	AXON AIR, CLASS 1 UAS BUNDLE	1	$2,380.73	$0.00	$2,380.73
Year 3	CLASS2UAS	AXON AIR, CLASS 2 UAS BUNDLE	5	$18,396.28	$0.00	$18,396.28
Year 3	Fleet3A	Fleet 3 Advanced	31	$75,745.38	$0.00	$75,745.38
Year 3	Fleet3ARe	Fleet 3 Advanced Renewal	175	$377,950.31	$0.00	$377,950.31
Year 3	ProLicense	Pro License Bundle	50	$28,132.66	$0.00	$28,132.66
Total				**$833,000.00**	**$0.00**	**$833,000.00**

Sep 2027

Invoice Plan	Item	Description	Qty	Subtotal	Tax	Total
Year 4	100112	AXON AIR - EVIDENCE.COM LICENSE - PILOT DATA	8	$3,516.42	$0.00	$3,516.42
Year 4	100560	AXON EVIDENCE - PSO - DATA CONVERSION/MIGRATION	1	$7,574.76	$0.00	$7,574.76
Year 4	100583	AXON AIR - UAS LICENSE - COPILOT FOR DJI AVATA	5	$3,246.33	$0.00	$3,246.33
Year 4	100584	AXON AIR - ADVANCED STREAMING ADD-ON	5	$1,623.16	$0.00	$1,623.16
Year 4	100586	AXON AIR - API INTEGRATIONS ADD-ON	5	$2,705.49	$0.00	$2,705.49
Year 4	101078	AXON AIR - RTC VIRTUAL ONBOARDING	1	$360.70	$0.00	$360.70
Year 4	50039	AXON INTERVIEW - CLIENT SOFTWARE - MAINT. PER TOUCH PANEL	6	$2,197.89	$0.00	$2,197.89
Year 4	50043	AXON INTERVIEW - STREAMING SERVER MAINTENANCE - PER SERVER	2	$856.51	$0.00	$856.51
Year 4	50045	AXON EVIDENCE - STORAGE - INTERVIEW ROOM UNLIMITED	6	$8,706.65	$0.00	$8,706.65
Year 4	50448	AXON INTERVIEW - EXT WARRANTY	6	$2,282.04	$0.00	$2,282.04
Year 4	73352	TRUE UP - BWC HARDWARE FINANCING	10	$151.28	$0.00	$151.28
Year 4	73638	AXON STANDARDS - LICENSE	200	$27,138.42	$0.00	$27,138.42
Year 4	73680	AXON RESPOND PLUS - LICENSE	155	$43,233.28	$0.00	$43,233.28
Year 4	73682	AXON EVIDENCE - AUTO TAGGING LICENSE	146	$20,570.02	$0.00	$20,570.02
Year 4	73682	AXON EVIDENCE - AUTO TAGGING LICENSE	9	$132.64	$0.00	$132.64
Year 4	73896	AXON STANDARDS - IMPLEMENTATION SERVICE	1	$6,093.51	$0.00	$6,093.51
Year 4	BWCUwTAP	BWC Unlimited with TAP	146	$188,940.85	$0.00	$188,940.85
Year 4	BWCUwTAP	BWC Unlimited with TAP	9	$11,064.69	$0.00	$11,064.69
Year 4	CLASS1UAS	AXON AIR, CLASS 1 UAS BUNDLE	1	$2,380.73	$0.00	$2,380.73
Year 4	CLASS2UAS	AXON AIR, CLASS 2 UAS BUNDLE	5	$18,396.28	$0.00	$18,396.28
Year 4	Fleet3A	Fleet 3 Advanced	31	$75,745.38	$0.00	$75,745.38
Year 4	Fleet3ARe	Fleet 3 Advanced Renewal	175	$377,950.31	$0.00	$377,950.31
Year 4	ProLicense	Pro License Bundle	50	$28,132.66	$0.00	$28,132.66
Total				**$833,000.00**	**$0.00**	**$833,000.00**

Sep 2028

Invoice Plan	Item	Description	Qty	Subtotal	Tax	Total
Year 5	100112	AXON AIR - EVIDENCE.COM LICENSE - PILOT DATA	8	$3,516.42	$0.00	$3,516.42
Year 5	100560	AXON EVIDENCE - PSO - DATA CONVERSION/MIGRATION	1	$7,574.76	$0.00	$7,574.76
Year 5	100583	AXON AIR - UAS LICENSE - COPILOT FOR DJI AVATA	5	$3,246.33	$0.00	$3,246.33
Year 5	100584	AXON AIR - ADVANCED STREAMING ADD-ON	5	$1,623.16	$0.00	$1,623.16
Year 5	100586	AXON AIR - API INTEGRATIONS ADD-ON	5	$2,705.49	$0.00	$2,705.49
Year 5	101078	AXON AIR - RTC VIRTUAL ONBOARDING	1	$360.70	$0.00	$360.70
Year 5	50039	AXON INTERVIEW - CLIENT SOFTWARE - MAINT. PER TOUCH PANEL	6	$2,197.89	$0.00	$2,197.89
Year 5	50043	AXON INTERVIEW - STREAMING SERVER MAINTENANCE - PER SERVER	2	$856.51	$0.00	$856.51
Year 5	50045	AXON EVIDENCE - STORAGE - INTERVIEW ROOM UNLIMITED	6	$8,706.65	$0.00	$8,706.65

Docusign Envelope ID: 6BA06514-9ACF-41E2-B678-0A77D6423B7A

Sep 2028

Invoice Plan	Item	Description	Qty	Subtotal	Tax	Total
Year 5	50448	AXON INTERVIEW - EXT WARRANTY	6	$2,282.04	$0.00	$2,282.04
Year 5	73352	TRUE UP - BWC HARDWARE FINANCING	10	$151.28	$0.00	$151.28
Year 5	73638	AXON STANDARDS - LICENSE	200	$27,138.42	$0.00	$27,138.42
Year 5	73680	AXON RESPOND PLUS - LICENSE	155	$43,233.28	$0.00	$43,233.28
Year 5	73682	AXON EVIDENCE - AUTO TAGGING LICENSE	9	$132.64	$0.00	$132.64
Year 5	73682	AXON EVIDENCE - AUTO TAGGING LICENSE	146	$20,570.02	$0.00	$20,570.02
Year 5	73896	AXON STANDARDS - IMPLEMENTATION SERVICE	1	$6,093.51	$0.00	$6,093.51
Year 5	BWCUwTAP	BWC Unlimited with TAP	146	$188,940.85	$0.00	$188,940.85
Year 5	BWCUwTAP	BWC Unlimited with TAP	9	$11,064.70	$0.00	$11,064.70
Year 5	CLASS1UAS	AXON AIR, CLASS 1 UAS BUNDLE	1	$2,380.73	$0.00	$2,380.73
Year 5	CLASS2UAS	AXON AIR, CLASS 2 UAS BUNDLE	5	$18,396.28	$0.00	$18,396.28
Year 5	Fleet3A	Fleet 3 Advanced	31	$75,745.38	$0.00	$75,745.38
Year 5	Fleet3ARe	Fleet 3 Advanced Renewal	175	$377,950.30	$0.00	$377,950.30
Year 5	ProLicense	Pro License Bundle	50	$28,132.66	$0.00	$28,132.66
Total				**$833,000.00**	**$0.00**	**$833,000.00**

Docusign Envelope ID: 6BA06514-9ACF-41E2-B678-0A77D6423B7A

Tax is estimated based on rates applicable at date of quote and subject to change at time of invoicing. If a tax exemption certificate should be applied, please submit prior to invoicing.

Contract BuyBoard Contract 648-21 is incorporated by reference into the terms and conditions of this Agreement. In the event of conflict the terms of Axon's Master Services and Purchasing Agreement shall govern. In the event that the start date for the purchases outlined under this Quote is before September 30, 2024, Buyboard Contract #648-21, along with the terms and conditions outlined herein shall govern. In the event that start date the purchase outlined under this Quote is on or after October 1, 2024, Buyboard Contract #743-24, along with the terms and conditions outlined herein, including Axon's MSPA, shall govern.

Standard Terms and Conditions

Axon Enterprise Inc. Sales Terms and Conditions

Axon Master Services and Purchasing Agreement:

This Quote is limited to and conditional upon your acceptance of the provisions set forth herein and Axon's Master Services and Purchasing Agreement (posted at https://www.axon.com/sales-terms-and-conditions), as well as the attached Statement of Work (SOW) for Axon Fleet and/or Axon Interview Room purchase, if applicable. In the event you and Axon have entered into a prior agreement to govern all future purchases, that agreement shall govern to the extent it includes the products and services being purchased and does not conflict with the Axon Customer Experience Improvement Program Appendix as described below.

ACEIP:

The Axon Customer Experience Improvement Program Appendix, which includes the sharing of de-identified segments of Agency Content with Axon to develop new products and improve your product experience (posted at www.axon.com/legal/sales-terms-and-conditions), is incorporated herein by reference. By signing below, you agree to the terms of the Axon Customer Experience Improvement Program.

Acceptance of Terms:

Any purchase order issued in response to this Quote is subject solely to the above referenced terms and conditions. By signing below, you represent that you are lawfully able to enter into contracts. If you are signing on behalf of an entity (including but not limited to the company, municipality, or government agency for whom you work), you represent to Axon that you have legal authority to bind that entity. If you do not have this authority, please do not sign this Quote.

Docusign Envelope ID: 6BA06514-9ACF-41E2-B678-0A77D6423B7A

Exceptions to Standard Terms and Conditions

Agency has existing contract(s) originated via Quote(s):

Q-335617

Q-328154

Q-328155

Q-405973

Q-546294

Agency is terminating those contracts effective 10/14/2024. Any change in this date will result in modification of the program value which may result in additional fees or credits due to or from Axon.

The parties agree that Axon is applying a Net Transfer Debit of $290,364.96 to the quote for delivered but unpaid items.

Any credits contained in this quote are contingent upon payment in full of the following amounts:

Q-471711 - 5/1/2024 - $77,341.78

Q-405973 - 5/1/2024 - $294,060.00

Q-395202 - 9/2/2023 - INUS183782 - $,1035.00

Docusign Envelope ID: 6BA06514-9ACF-41E2-B678-0A77D6423B7A

Signature	Date Signed
	8/23/2024



Exhibit I - Axon Respond Appendix

This Axon Respond Appendix applies to both Axon Respond and Axon Respond Plus, if either is included on the Quote.

1. **Axon Respond Subscription Term**. If Customer purchases Axon Respond as part of a bundled offering, the Axon Respond subscription begins on the later of the (1) start date of that bundled offering, or (2) date Axon provisions Axon Respond to Customer. If Customer purchases Axon Respond as a standalone, the Axon Respond subscription begins the later of the (1) date Axon provisions Axon Respond to Customer, or (2) first day of the month following the Effective Date. The Axon Respond subscription term will end upon the completion of the Axon Evidence Subscription associated with Axon Respond.

2. **Scope of Axon Respond**. The scope of Axon Respond is to assist Customer with real-time situational awareness during critical incidents to improve officer safety, effectiveness, and awareness. In the event Customer uses Axon Respond outside this scope, Axon may initiate good-faith discussions with Customer on upgrading Customer's Axon Respond to better meet Customer's needs.

3. **Axon Body LTE Requirements**. Axon Respond is only available and usable with an LTE enabled body-worn camera. Axon is not liable if Customer utilizes the LTE device outside of the coverage area or if the LTE carrier is unavailable. LTE coverage is only available in the United States, including any U.S. territories. Axon may utilize a carrier of Axon's choice to provide LTE service. Axon may change LTE carriers during the Term without Customer's consent.

4. **Axon Fleet LTE Requirements.** Axon Respond is only available and usable with a Fleet system configured with LTE modem and service. Customer is responsible for providing LTE service for the modem. Coverage and availability of LTE service is subject to Customer's LTE carrier.

5. **Axon Respond Service Limitations**. Customer acknowledges that LTE service is made available only within the operating range of the networks. Service may be temporarily refused, interrupted, or limited because of: (a) facilities limitations; (b) transmission limitations caused by atmospheric, terrain, other natural or artificial conditions adversely affecting transmission, weak batteries, system overcapacity, movement outside a service area or gaps in coverage in a service area, and other causes reasonably outside of the carrier's control such as intentional or negligent acts of third parties that damage or impair the network or disrupt service; or (c) equipment modifications, upgrades, relocations, repairs, and other similar activities necessary for the proper or improved operation of service.

   5.1. With regard to Axon Body, Partner networks are made available as-is and the carrier makes no warranties or representations as to the availability or quality of roaming service provided by carrier partners, and the carrier will not be liable in any capacity for any errors, outages, or failures of carrier partner networks. Customer expressly understands and agrees that it has no contractual relationship whatsoever with the underlying wireless service provider or its affiliates or contractors and Customer is not a third-party beneficiary of any agreement between Axon and the underlying carrier.

6. **Termination**. Upon termination of this Agreement, or if Customer stops paying for Axon Respond or bundles that include Axon Respond, Axon will end Axon Respond services, including any Axon-provided LTE service.

Exhibit J - Add-on Services Appendix

This Appendix applies if Axon Community Request, Axon Redaction Assistant, and/or Axon Performance are included on the Quote.

1. **Subscription Term**. If Customer purchases Axon Community Request, Axon Redaction Assistant, or Axon Performance as part of OSP 7 or OSP 10, the subscription begins on the later of the (1) start date of the OSP 7 or OSP 10 Term, or (2) date Axon provisions Axon Community Request Axon Redaction Assistant, or Axon Performance to Customer.

   1.1. If Customer purchases Axon Community Request, Axon Redaction Assistant, or Axon Performance as a standalone, the subscription begins the later of the (1) date Axon provisions Axon Community Request, Axon Redaction Assistant, or Axon Performance to Customer, or (2) first day of the month following the Effective Date.

   1.2. The subscription term will end upon the completion of the Axon Evidence Subscription associated with the add-on.

2. **Axon Community Request Storage**. For Axon Community Request, Customer may store an unlimited amount of data submitted through the public portal ("**Portal Content**"), within Customer's Axon Evidence instance. The post-termination provisions outlined in the Axon Cloud Services Terms of Use Appendix also apply to Portal Content.

3. **Performance Auto-Tagging Data**. In order to provide some features of Axon Performance to Customer, Axon will need to store call for service data from Customer's CAD or RMS.

Docusign Envelope ID: 6BA06514-9ACF-41E2-B678-0A77D6423B7A

This FOURTH AMENDMENT TO MASTER SERVICES AND PURCHASING AGREEMENT ("**Fourth Amendment**") dated 9/10/2024 | 12:40 PM MST, 2024 ("**Fourth Amendment Effective Date**") to the Agreement dated September 29, 2021 ("**Agreement**"), as amended, between AXON ENTERPRISE, INC., a Delaware corporation, *fka* TASER International Inc. ("**Axon**") and City of Midland ("**Agency**") is entered into between the parties to amend the Agreement as set forth in this Fourth Amendment. Axon and Agency may also be referred to in this Fourth Amendment individually as "Party" or collectively as "Parties." To the extent this Fourth Amendment contains terms and conditions that differ from those contained in the Agreement, this Fourth Amendment shall control. The Parties agree that a concept or principle covered in this Fourth Amendment shall apply and be incorporated into all other provisions of the Agreement in which the concept or principle is also applicable, notwithstanding the absence of any specific cross-reference thereto. All capitalized and defined terms referenced, but not defined, in this Fourth Amendment shall have the meanings assigned to them in the Agreement.

NOW, THEREFORE, in consideration of the mutual covenants and agreements contained in this Fourth Amendment and the Agreement, the Parties hereby agree as follows:

1. To add and incorporate **Exhibit E: Quote: Q-561381-45527.897DT**
2. To add and incorporate the following language into **Exhibit F** under the **Professional Services Appendix**:

   1. **Axon Air, On-Site Training.** Axon Air, On-Site training includes advance remote project planning and configuration support and one (1) day of on-site Services and a professional services manager to work closely with Customer to assess Customer's deployment and determine which Services are appropriate. If Customer's requires more than one (1) day of on-site Services, Customer must purchase additional on-site Services. The Axon Air, On-Site training options include:

System set up and configuration (Remote Support) • Instructor-led setup of Axon Air App (ASDS) • Configure Customer settings based on Customer need • Configure drone controller • Troubleshoot IT issues with Axon Evidence
Axon instructor training (Train the Trainer) Training for Customer's in-house instructors who can support Customer's Axon Air and Axon Evidence training needs after Axon's has fulfilled its contracted on-site obligations
Classroom and practical training sessions Step-by-step explanation and assistance for Customer's configuration of Axon Respond+ livestreaming functionality, basic operation, and best practices

   2. **Axon Air, Virtual Training.** Axon Air, Virtual training includes all items in the Axon Air, On-Site Training Package, except the practical training session, with the Axon Instructor training for up to four hours virtually.

3. To add and incorporate **Exhibit I: Respond Appendix**
4. To add and incorporate **Exhibit J: Add-On Services Appendix**
5. Except as set forth in this Fourth Amendment, the terms and provisions of the Agreement shall remain in full force and effect.
6. The signatories to this Fourth Amendment represent and warrant that they have full rights, power and authority to enter into and bind his or her, as the case may be, respective Party to the obligations set forth in this Fourth Amendment without further consent or approval of any kind.

Docusign Envelope ID: 6BA06514-9ACF-41E2-B678-0A77D6423B7A

IN WITNESS WHEREOF, each Party, by and through its respective representative, has duly executed and delivered this Fourth Amendment as of the Fourth Amendment Effective Date.

AXON: AXON ENTERPRISE, INC., a Delaware corporation

DocuSigned by:
Robert Driscoll
55DAEBB131A4424...

By: _____

Robert Driscoll

Name: _____

Deputy General Counsel

Title: _____

9/10/2024 | 12:40 PM MST

Date: _____

Agency: CITY OF MIDLAND- TX

By: _____

Name: _____

Title: _____

Date: _____

Docusign Envelope ID: 6BA06514-9ACF-41E2-B678-0A77D6423B7A

Exhibit E – Quote

See Next Page

Axon Enterprise, Inc.
17800 N 85th St.
Scottsdale, Arizona 85255
United States
VAT: 86-0741227
Domestic: (800) 978-2737
International: +1.800.978.2737

Q-561381-45527.897DT

Issued: 08/23/2024

Quote Expiration: 09/27/2024

Estimated Contract Start Date: 10/15/2024

Account Number: 465613

Payment Terms: N30

Delivery Method:

SHIP TO	BILL TO
Midland Police Dept. - TX 601 N Loraine St Midland, TX 79701-4759 USA	Midland Police Dept. - TX 601 N Loraine St Midland TX 79701-4759 USA Email:

SALES REPRESENTATIVE	PRIMARY CONTACT
Danny Thielen Phone: (480) 434-8810 Email: dthielen@axon.com Fax:	Brian Rackow Phone: (432) 685-1689 Email: brackow@midlandtexas.gov Fax:

Quote Summary

Program Length	60 Months
TOTAL COST	$4,165,000.00
ESTIMATED TOTAL W/ TAX	$4,165,000.00

Discount Summary

Average Savings Per Year	$125,654.02
TOTAL SAVINGS	$628,270.09

Docusign Envelope ID: 6BA06514-9ACF-41E2-B678-0A77D6423B7A

Payment Summary

Date	Subtotal	Tax	Total
Sep 2024	$833,000.00	$0.00	$833,000.00
Sep 2025	$833,000.00	$0.00	$833,000.00
Sep 2026	$833,000.00	$0.00	$833,000.00
Sep 2027	$833,000.00	$0.00	$833,000.00
Sep 2028	$833,000.00	$0.00	$833,000.00
Total	**$4,165,000.00**	**$0.00**	**$4,165,000.00**

Docusign Envelope ID: 6BA06514-9ACF-41E2-B678-0A77D6423B7A

Quote Unbundled Price:	**$4,793,270.09**
Quote List Price:	**$4,392,302.48**
Quote Subtotal:	**$4,165,000.00**

Pricing

All deliverables are detailed in Delivery Schedules section lower in proposal

Item	Description	Qty	Term	Unbundled	List Price	Net Price	Subtotal	Tax	Total
Program									
80462	TRUE UP - FLEET 3 ADVANCED WITH TAP	31	3		$108.00	$0.00	$0.00	$0.00	$0.00
73352	TRUE UP - BWC HARDWARE FINANCING	10	3		$23.30	$23.30	$699.00	$0.00	$699.00
100553	TRANSFER CREDIT - SOFTWARE AND SERVICES	1			$1.00	$17,083.36	$17,083.36	$0.00	$17,083.36
100552	TRANSFER CREDIT - GOODS	1			$1.00	$273,281.60	$273,281.60	$0.00	$273,281.60
Fleet3ARe	Fleet 3 Advanced Renewal	175	60	$202.68	$189.57	$166.32	$1,746,360.00	$0.00	$1,746,360.00
BWCUwTAP	BWC Unlimited with TAP	146	60	$121.48	$99.66	$99.66	$873,021.60	$0.00	$873,021.60
BWCUwTAP	BWC Unlimited with TAP	9	57	$120.44	$99.66	$99.66	$51,125.58	$0.00	$51,125.58
CLASS1UAS	AXON AIR, CLASS 1 UAS BUNDLE	1	60	$183.34	$183.34	$183.34	$11,000.40	$0.00	$11,000.40
CLASS2UAS	AXON AIR, CLASS 2 UAS BUNDLE	5	60	$283.34	$283.34	$283.34	$85,002.00	$0.00	$85,002.00
Fleet3A	Fleet 3 Advanced	31	57	$289.38	$254.57	$198.07	$349,989.69	$0.00	$349,989.69
A la Carte Hardware									
H00001	AB4 Camera Bundle	9			$849.00	$849.00	$7,641.00	$0.00	$7,641.00
H00002	AB4 Multi Bay Dock Bundle	11			$1,638.90	$1,638.90	$18,027.90	$0.00	$18,027.90
F00011	BUNDLE - FLEET CRADLEPOINT R920 SINGLE MODEM KIT	31			$1,713.00	$0.00	$0.00	$0.00	$0.00
A la Carte Software									
73618	AXON COMMUNITY REQUEST	9	57		$10.79	$0.00	$0.00	$0.00	$0.00
73618	AXON COMMUNITY REQUEST	146	60		$10.85	$0.00	$0.00	$0.00	$0.00
73682	AXON EVIDENCE - AUTO TAGGING LICENSE	9	57		$10.79	$1.19	$612.90	$0.00	$612.90
50043	AXON INTERVIEW - STREAMING SERVER MAINTENANCE - PER SERVER	2	60		$32.98	$32.98	$3,957.60	$0.00	$3,957.60
100584	AXON AIR - ADVANCED STREAMING ADD-ON	5	60		$25.00	$25.00	$7,500.00	$0.00	$7,500.00
50039	AXON INTERVIEW - CLIENT SOFTWARE - MAINT. PER TOUCH PANEL	6	60		$28.21	$28.21	$10,155.60	$0.00	$10,155.60
100586	AXON AIR - API INTEGRATIONS ADD-ON	5	60		$41.67	$41.67	$12,501.00	$0.00	$12,501.00
100583	AXON AIR - UAS LICENSE - COPILOT FOR DJI AVATA	5	60		$50.00	$50.00	$15,000.00	$0.00	$15,000.00
100112	AXON AIR - EVIDENCE.COM LICENSE - PILOT DATA	8	60		$33.85	$33.85	$16,248.00	$0.00	$16,248.00
50045	AXON EVIDENCE - STORAGE - INTERVIEW ROOM UNLIMITED	6	60		$111.75	$111.75	$40,230.00	$0.00	$40,230.00
73682	AXON EVIDENCE - AUTO TAGGING LICENSE	146	60		$10.85	$10.85	$95,046.00	$0.00	$95,046.00
73638	AXON STANDARDS - LICENSE	200	58		$10.81	$10.81	$125,396.00	$0.00	$125,396.00
73680	AXON RESPOND PLUS - LICENSE	155	60		$21.48	$21.48	$199,764.00	$0.00	$199,764.00
ProLicense	Pro License Bundle	50	60		$43.40	$43.33	$129,990.00	$0.00	$129,990.00
A la Carte Services									
100159	AXON FLEET 3 - SERVICES - ALPR API INTEGRATION	1			$3,000.00	$0.00	$0.00	$0.00	$0.00
101078	AXON AIR - RTC VIRTUAL ONBOARDING	1			$1,666.67	$1,666.67	$1,666.67	$0.00	$1,666.67
73896	AXON STANDARDS - IMPLEMENTATION SERVICE	1			$30,000.00	$28,155.70	$28,155.70	$0.00	$28,155.70
100560	AXON EVIDENCE - PSO - DATA CONVERSION/MIGRATION	1			$35,000.00	$35,000.00	$35,000.00	$0.00	$35,000.00
A la Carte Warranties									
73390	AXON FLEET - CRADLEPOINT ROUTER TRANSFERRED WARRANTY	145	44		$0.00	$0.00	$0.00	$0.00	$0.00

73390	AXON FLEET - CRADLEPOINT ROUTER TRANSFERRED WARRANTY	30	54	$0.00	$0.00	$0.00	$0.00	$0.00
50448	AXON INTERVIEW - EXT WARRANTY	6	60	$29.29	$29.29	$10,544.40	$0.00	$10,544.40
Total						**$4,165,000.00**	**$0.00**	**$4,165,000.00**

Delivery Schedule

Hardware

Bundle	Item	Description	QTY	Shipping Location	Estimated Delivery Date
AB4 Camera Bundle	100147	AXON BODY 4 - CAMERA - NA US FIRST RESPONDER BLK RAPIDLOCK	9	1	12/15/2024
AB4 Camera Bundle	100466	AXON BODY 4 - CABLE - USB-C TO USB-C	10	1	12/15/2024
AB4 Camera Bundle	74028	AXON BODY - MOUNT - WING CLIP RAPIDLOCK	10	1	12/15/2024
AB4 Multi Bay Dock Bundle	100206	AXON BODY 4 - 8 BAY DOCK	11	1	12/15/2024
AB4 Multi Bay Dock Bundle	70033	AXON - DOCK WALL MOUNT - BRACKET ASSY	11	1	12/15/2024
AB4 Multi Bay Dock Bundle	71019	AXON BODY - DOCK POWERCORD - NORTH AMERICA	11	1	12/15/2024
BUNDLE - FLEET CRADLEPOINT R920 SINGLE MODEM KIT	100989	AXON FLEET - CRADLEPOINT R920-C7A+5YR NETCLOUD	31	1	12/15/2024
BUNDLE - FLEET CRADLEPOINT R920 SINGLE MODEM KIT	71200	AXON FLEET - AIRGAIN ANT - 5-IN-1 2LTE 2WIFI 1GNSS BL	31	1	12/15/2024
Fleet 3 Advanced	70112	AXON SIGNAL - SIGNAL UNIT	31	1	12/15/2024
Fleet 3 Advanced	72036	AXON FLEET 3 - STANDARD 2 CAMERA KIT	31	1	12/15/2024
Fleet 3 Advanced	72036	AXON FLEET 3 - STANDARD 2 CAMERA KIT	1	1	12/15/2024
BWC Unlimited with TAP	73309	AXON BODY - TAP REFRESH 1 - CAMERA	150	1	06/15/2026
BWC Unlimited with TAP	73309	AXON BODY - TAP REFRESH 1 - CAMERA	9	1	06/15/2026
BWC Unlimited with TAP	73689	AXON BODY - TAP REFRESH 1 - DOCK MULTI BAY	1	1	06/15/2026
BWC Unlimited with TAP	73689	AXON BODY - TAP REFRESH 1 - DOCK MULTI BAY	19	1	06/15/2026
Fleet 3 Advanced Renewal	72040	AXON FLEET - TAP REFRESH 1 - 2 CAMERA KIT	175	1	05/31/2028
Fleet 3 Advanced Renewal	72040	AXON FLEET - TAP REFRESH 1 - 2 CAMERA KIT	5	1	05/31/2028
BWC Unlimited with TAP	73310	AXON BODY - TAP REFRESH 2 - CAMERA	150	1	12/15/2028
BWC Unlimited with TAP	73310	AXON BODY - TAP REFRESH 2 - CAMERA	9	1	12/15/2028
BWC Unlimited with TAP	73688	AXON BODY - TAP REFRESH 2 - DOCK MULTI BAY	19	1	12/15/2028
BWC Unlimited with TAP	73688	AXON BODY - TAP REFRESH 2 - DOCK MULTI BAY	1	1	12/15/2028
Fleet 3 Advanced	72040	AXON FLEET - TAP REFRESH 1 - 2 CAMERA KIT	31	1	09/15/2029
Fleet 3 Advanced	72040	AXON FLEET - TAP REFRESH 1 - 2 CAMERA KIT	1	1	09/15/2029

Software

Bundle	Item	Description	QTY	Estimated Start Date	Estimated End Date
AXON AIR, CLASS 1 UAS BUNDLE	100579	AXON AIR - UAS LICENSE - CLASS 1	1	10/15/2024	10/14/2029
AXON AIR, CLASS 1 UAS BUNDLE	100584	AXON AIR - ADVANCED STREAMING ADD-ON	1	10/15/2024	10/14/2029
AXON AIR, CLASS 1 UAS BUNDLE	100586	AXON AIR - API INTEGRATIONS ADD-ON	1	10/15/2024	10/14/2029
AXON AIR, CLASS 2 UAS BUNDLE	100580	AXON AIR - UAS LICENSE - CLASS 2	5	10/15/2024	10/14/2029
AXON AIR, CLASS 2 UAS BUNDLE	100584	AXON AIR - ADVANCED STREAMING ADD-ON	5	10/15/2024	10/14/2029
AXON AIR, CLASS 2 UAS BUNDLE	100586	AXON AIR - API INTEGRATIONS ADD-ON	5	10/15/2024	10/14/2029
BWC Unlimited with TAP	73686	AXON EVIDENCE - STORAGE - UNLIMITED (AXON DEVICE)	146	10/15/2024	10/14/2029
BWC Unlimited with TAP	73746	AXON EVIDENCE - ECOM LICENSE - PRO	146	10/15/2024	10/14/2029
Fleet 3 Advanced Renewal	80400	AXON EVIDENCE - FLEET VEHICLE LICENSE	175	10/15/2024	10/14/2029
Fleet 3 Advanced Renewal	80401	AXON FLEET 3 - ALPR LICENSE - 1 CAMERA	175	10/15/2024	10/14/2029
Fleet 3 Advanced Renewal	80402	AXON RESPOND - LICENSE - FLEET 3	175	10/15/2024	10/14/2029
Fleet 3 Advanced Renewal	80410	AXON EVIDENCE - STORAGE - FLEET 1 CAMERA UNLIMITED	350	10/15/2024	10/14/2029

Software

Bundle	Item	Description	QTY	Estimated Start Date	Estimated End Date
Pro License Bundle	73683	AXON EVIDENCE - STORAGE - 10GB A LA CARTE	150	10/15/2024	10/14/2029
Pro License Bundle	73746	AXON EVIDENCE - ECOM LICENSE - PRO	50	10/15/2024	10/14/2029
A la Carte	100112	AXON AIR - EVIDENCE.COM LICENSE - PILOT DATA	8	10/15/2024	10/14/2029
A la Carte	100583	AXON AIR - UAS LICENSE - COPILOT FOR DJI AVATA	5	10/15/2024	10/14/2029
A la Carte	100584	AXON AIR - ADVANCED STREAMING ADD-ON	5	10/15/2024	10/14/2029
A la Carte	100586	AXON AIR - API INTEGRATIONS ADD-ON	5	10/15/2024	10/14/2029
A la Carte	50039	AXON INTERVIEW - CLIENT SOFTWARE - MAINT. PER TOUCH PANEL	6	10/15/2024	10/14/2029
A la Carte	50043	AXON INTERVIEW - STREAMING SERVER MAINTENANCE - PER SERVER	2	10/15/2024	10/14/2029
A la Carte	50045	AXON EVIDENCE - STORAGE - INTERVIEW ROOM UNLIMITED	6	10/15/2024	10/14/2029
A la Carte	73618	AXON COMMUNITY REQUEST	146	10/15/2024	10/14/2029
A la Carte	73680	AXON RESPOND PLUS - LICENSE	155	10/15/2024	10/14/2029
A la Carte	73682	AXON EVIDENCE - AUTO TAGGING LICENSE	146	10/15/2024	10/14/2029
A la Carte	73638	AXON STANDARDS - LICENSE	200	12/15/2024	10/14/2029
BWC Unlimited with TAP	73686	AXON EVIDENCE - STORAGE - UNLIMITED (AXON DEVICE)	9	01/15/2025	10/14/2029
BWC Unlimited with TAP	73746	AXON EVIDENCE - ECOM LICENSE - PRO	9	01/15/2025	10/14/2029
Fleet 3 Advanced	80400	AXON EVIDENCE - FLEET VEHICLE LICENSE	31	01/15/2025	10/14/2029
Fleet 3 Advanced	80401	AXON FLEET 3 - ALPR LICENSE - 1 CAMERA	31	01/15/2025	10/14/2029
Fleet 3 Advanced	80402	AXON RESPOND - LICENSE - FLEET 3	31	01/15/2025	10/14/2029
Fleet 3 Advanced	80410	AXON EVIDENCE - STORAGE - FLEET 1 CAMERA UNLIMITED	62	01/15/2025	10/14/2029
A la Carte	73618	AXON COMMUNITY REQUEST	9	01/15/2025	10/14/2029
A la Carte	73682	AXON EVIDENCE - AUTO TAGGING LICENSE	9	01/15/2025	10/14/2029

Services

Bundle	Item	Description	QTY
BUNDLE - FLEET CRADLEPOINT R920 SINGLE MODEM KIT	100738	AXON FLEET 3 - SIM INSERTION - VZW 4FF	31
Fleet 3 Advanced	73391	AXON FLEET 3 - DEPLOYMENT PER VEHICLE - NOT OVERSIZED	31
A la Carte	100159	AXON FLEET 3 - SERVICES - ALPR API INTEGRATION	1
A la Carte	100560	AXON EVIDENCE - PSO - DATA CONVERSION/MIGRATION	1
A la Carte	101078	AXON AIR - RTC VIRTUAL ONBOARDING	1
A la Carte	73896	AXON STANDARDS - IMPLEMENTATION SERVICE	1

Warranties

Bundle	Item	Description	QTY	Estimated Start Date	Estimated End Date
A la Carte	50448	AXON INTERVIEW - EXT WARRANTY	6	10/15/2024	10/14/2029
A la Carte	73390	AXON FLEET - CRADLEPOINT ROUTER TRANSFERRED WARRANTY	30	10/15/2024	03/31/2029
A la Carte	73390	AXON FLEET - CRADLEPOINT ROUTER TRANSFERRED WARRANTY	145	10/15/2024	05/31/2028
BWC Unlimited with TAP	80464	AXON BODY - TAP WARRANTY - CAMERA	146	09/15/2025	10/14/2029
BWC Unlimited with TAP	80464	AXON BODY - TAP WARRANTY - CAMERA	4	09/15/2025	10/14/2029
BWC Unlimited with TAP	80465	AXON BODY - TAP WARRANTY - MULTI BAY DOCK	19	09/15/2025	10/14/2029
Fleet 3 Advanced Renewal	80495	AXON FLEET 3 - EXT WARRANTY - 2 CAMERA KIT	175	09/15/2025	10/14/2029
Fleet 3 Advanced Renewal	80495	AXON FLEET 3 - EXT WARRANTY - 2 CAMERA KIT	5	09/15/2025	10/14/2029
BWC Unlimited with TAP	80464	AXON BODY - TAP WARRANTY - CAMERA	9	12/15/2025	10/14/2029
BWC Unlimited with TAP	80465	AXON BODY - TAP WARRANTY - MULTI BAY DOCK	1	12/15/2025	10/14/2029
Fleet 3 Advanced	80379	AXON SIGNAL - EXT WARRANTY - SIGNAL UNIT	31	12/15/2025	10/14/2029
Fleet 3 Advanced	80495	AXON FLEET 3 - EXT WARRANTY - 2 CAMERA KIT	1	12/15/2025	10/14/2029
Fleet 3 Advanced	80495	AXON FLEET 3 - EXT WARRANTY - 2 CAMERA KIT	31	12/15/2025	10/14/2029

Shipping Locations

Location Number	Street	City	State	Zip	Country
1	601 N Loraine St	Midland	TX	79701-4759	USA

Payment Details

Sep 2024

Invoice Plan	Item	Description	Qty	Subtotal	Tax	Total
Transfer Debits Upfront	100552	TRANSFER CREDIT - GOODS	1	$273,281.60	$0.00	$273,281.60
Transfer Debits Upfront	100553	TRANSFER CREDIT - SOFTWARE AND SERVICES	1	$17,083.36	$0.00	$17,083.36
Upfront Hardware	H00001	AB4 Camera Bundle	9	$7,641.00	$0.00	$7,641.00
Upfront Hardware	H00002	AB4 Multi Bay Dock Bundle	11	$18,027.90	$0.00	$18,027.90
Year 1	100112	AXON AIR - EVIDENCE.COM LICENSE - PILOT DATA	8	$2,182.32	$0.00	$2,182.32
Year 1	100560	AXON EVIDENCE - PSO - DATA CONVERSION/MIGRATION	1	$4,700.95	$0.00	$4,700.95
Year 1	100583	AXON AIR - UAS LICENSE - COPILOT FOR DJI AVATA	5	$2,014.69	$0.00	$2,014.69
Year 1	100584	AXON AIR - ADVANCED STREAMING ADD-ON	5	$1,007.35	$0.00	$1,007.35
Year 1	100586	AXON AIR - API INTEGRATIONS ADD-ON	5	$1,679.05	$0.00	$1,679.05
Year 1	101078	AXON AIR - RTC VIRTUAL ONBOARDING	1	$223.86	$0.00	$223.86
Year 1	50039	AXON INTERVIEW - CLIENT SOFTWARE - MAINT. PER TOUCH PANEL	6	$1,364.03	$0.00	$1,364.03
Year 1	50043	AXON INTERVIEW - STREAMING SERVER MAINTENANCE - PER SERVER	2	$531.56	$0.00	$531.56
Year 1	50045	AXON EVIDENCE - STORAGE - INTERVIEW ROOM UNLIMITED	6	$5,403.41	$0.00	$5,403.41
Year 1	50448	AXON INTERVIEW - EXT WARRANTY	6	$1,416.25	$0.00	$1,416.25
Year 1	73352	TRUE UP - BWC HARDWARE FINANCING	10	$93.88	$0.00	$93.88
Year 1	73638	AXON STANDARDS - LICENSE	200	$16,842.31	$0.00	$16,842.31
Year 1	73680	AXON RESPOND PLUS - LICENSE	155	$26,830.90	$0.00	$26,830.90
Year 1	73682	AXON EVIDENCE - AUTO TAGGING LICENSE	146	$12,765.91	$0.00	$12,765.91
Year 1	73682	AXON EVIDENCE - AUTO TAGGING LICENSE	9	$82.32	$0.00	$82.32
Year 1	73896	AXON STANDARDS - IMPLEMENTATION SERVICE	1	$3,781.68	$0.00	$3,781.68
Year 1	BWCUwTAP	BWC Unlimited with TAP	9	$6,866.83	$0.00	$6,866.83
Year 1	BWCUwTAP	BWC Unlimited with TAP	146	$117,258.14	$0.00	$117,258.14
Year 1	CLASS1UAS	AXON AIR, CLASS 1 UAS BUNDLE	1	$1,477.50	$0.00	$1,477.50
Year 1	CLASS2UAS	AXON AIR, CLASS 2 UAS BUNDLE	5	$11,416.88	$0.00	$11,416.88
Year 1	Fleet3A	Fleet 3 Advanced	31	$47,008.14	$0.00	$47,008.14
Year 1	Fleet3ARe	Fleet 3 Advanced Renewal	175	$234,558.83	$0.00	$234,558.83
Year 1	ProLicense	Pro License Bundle	50	$17,459.35	$0.00	$17,459.35
Total				**$833,000.00**	**$0.00**	**$833,000.00**

Oct 2024

Invoice Plan	Item	Description	Qty	Subtotal	Tax	Total
Invoice Upon Fulfillment	100159	AXON FLEET 3 - SERVICES - ALPR API INTEGRATION	1	$0.00	$0.00	$0.00
Invoice Upon Fulfillment	73390	AXON FLEET - CRADLEPOINT ROUTER TRANSFERRED WARRANTY	30	$0.00	$0.00	$0.00
Invoice Upon Fulfillment	73390	AXON FLEET - CRADLEPOINT ROUTER TRANSFERRED WARRANTY	145	$0.00	$0.00	$0.00
Invoice Upon Fulfillment	73618	AXON COMMUNITY REQUEST	146	$0.00	$0.00	$0.00
Invoice Upon Fulfillment	80462	TRUE UP - FLEET 3 ADVANCED WITH TAP	31	$0.00	$0.00	$0.00
Total				**$0.00**	**$0.00**	**$0.00**

Dec 2024

Invoice Plan	Item	Description	Qty	Subtotal	Tax	Total
Invoice Upon Fulfillment	F00011	BUNDLE - FLEET CRADLEPOINT R920 SINGLE MODEM KIT	31	$0.00	$0.00	$0.00
Invoice Upon Fulfillment	H00001	AB4 Camera Bundle	9	$0.00	$0.00	$0.00
Total				**$0.00**	**$0.00**	**$0.00**

Jan 2025

Invoice Plan	Item	Description	Qty	Subtotal	Tax	Total
Invoice Upon Fulfillment	73618	AXON COMMUNITY REQUEST	9	$0.00	$0.00	$0.00
Total				**$0.00**	**$0.00**	**$0.00**

Sep 2025

Invoice Plan	Item	Description	Qty	Subtotal	Tax	Total
Year 2	100112	AXON AIR - EVIDENCE.COM LICENSE - PILOT DATA	8	$3,516.42	$0.00	$3,516.42
Year 2	100560	AXON EVIDENCE - PSO - DATA CONVERSION/MIGRATION	1	$7,574.76	$0.00	$7,574.76
Year 2	100583	AXON AIR - UAS LICENSE - COPILOT FOR DJI AVATA	5	$3,246.33	$0.00	$3,246.33
Year 2	100584	AXON AIR - ADVANCED STREAMING ADD-ON	5	$1,623.16	$0.00	$1,623.16
Year 2	100586	AXON AIR - API INTEGRATIONS ADD-ON	5	$2,705.49	$0.00	$2,705.49
Year 2	101078	AXON AIR - RTC VIRTUAL ONBOARDING	1	$360.70	$0.00	$360.70
Year 2	50039	AXON INTERVIEW - CLIENT SOFTWARE - MAINT. PER TOUCH PANEL	6	$2,197.89	$0.00	$2,197.89
Year 2	50043	AXON INTERVIEW - STREAMING SERVER MAINTENANCE - PER SERVER	2	$856.51	$0.00	$856.51
Year 2	50045	AXON EVIDENCE - STORAGE - INTERVIEW ROOM UNLIMITED	6	$8,706.65	$0.00	$8,706.65
Year 2	50448	AXON INTERVIEW - EXT WARRANTY	6	$2,282.04	$0.00	$2,282.04
Year 2	73352	TRUE UP - BWC HARDWARE FINANCING	10	$151.28	$0.00	$151.28
Year 2	73638	AXON STANDARDS - LICENSE	200	$27,138.42	$0.00	$27,138.42
Year 2	73680	AXON RESPOND PLUS - LICENSE	155	$43,233.28	$0.00	$43,233.28
Year 2	73682	AXON EVIDENCE - AUTO TAGGING LICENSE	146	$20,570.02	$0.00	$20,570.02
Year 2	73682	AXON EVIDENCE - AUTO TAGGING LICENSE	9	$132.64	$0.00	$132.64
Year 2	73896	AXON STANDARDS - IMPLEMENTATION SERVICE	1	$6,093.51	$0.00	$6,093.51
Year 2	BWCUwTAP	BWC Unlimited with TAP	9	$11,064.69	$0.00	$11,064.69
Year 2	BWCUwTAP	BWC Unlimited with TAP	146	$188,940.85	$0.00	$188,940.85
Year 2	CLASS1UAS	AXON AIR, CLASS 1 UAS BUNDLE	1	$2,380.73	$0.00	$2,380.73
Year 2	CLASS2UAS	AXON AIR, CLASS 2 UAS BUNDLE	5	$18,396.28	$0.00	$18,396.28
Year 2	Fleet3A	Fleet 3 Advanced	31	$75,745.38	$0.00	$75,745.38
Year 2	Fleet3ARe	Fleet 3 Advanced Renewal	175	$377,950.31	$0.00	$377,950.31
Year 2	ProLicense	Pro License Bundle	50	$28,132.66	$0.00	$28,132.66
Total				**$833,000.00**	**$0.00**	**$833,000.00**

Sep 2026

Invoice Plan	Item	Description	Qty	Subtotal	Tax	Total
Year 3	100112	AXON AIR - EVIDENCE.COM LICENSE - PILOT DATA	8	$3,516.42	$0.00	$3,516.42
Year 3	100560	AXON EVIDENCE - PSO - DATA CONVERSION/MIGRATION	1	$7,574.76	$0.00	$7,574.76
Year 3	100583	AXON AIR - UAS LICENSE - COPILOT FOR DJI AVATA	5	$3,246.33	$0.00	$3,246.33
Year 3	100584	AXON AIR - ADVANCED STREAMING ADD-ON	5	$1,623.16	$0.00	$1,623.16
Year 3	100586	AXON AIR - API INTEGRATIONS ADD-ON	5	$2,705.49	$0.00	$2,705.49
Year 3	101078	AXON AIR - RTC VIRTUAL ONBOARDING	1	$360.70	$0.00	$360.70
Year 3	50039	AXON INTERVIEW - CLIENT SOFTWARE - MAINT. PER TOUCH PANEL	6	$2,197.89	$0.00	$2,197.89
Year 3	50043	AXON INTERVIEW - STREAMING SERVER MAINTENANCE - PER SERVER	2	$856.51	$0.00	$856.51
Year 3	50045	AXON EVIDENCE - STORAGE - INTERVIEW ROOM UNLIMITED	6	$8,706.65	$0.00	$8,706.65
Year 3	50448	AXON INTERVIEW - EXT WARRANTY	6	$2,282.04	$0.00	$2,282.04
Year 3	73352	TRUE UP - BWC HARDWARE FINANCING	10	$151.28	$0.00	$151.28
Year 3	73638	AXON STANDARDS - LICENSE	200	$27,138.42	$0.00	$27,138.42

Sep 2026

Invoice Plan	Item	Description	Qty	Subtotal	Tax	Total
Year 3	73680	AXON RESPOND PLUS - LICENSE	155	$43,233.28	$0.00	$43,233.28
Year 3	73682	AXON EVIDENCE - AUTO TAGGING LICENSE	9	$132.64	$0.00	$132.64
Year 3	73682	AXON EVIDENCE - AUTO TAGGING LICENSE	146	$20,570.02	$0.00	$20,570.02
Year 3	73896	AXON STANDARDS - IMPLEMENTATION SERVICE	1	$6,093.51	$0.00	$6,093.51
Year 3	BWCUwTAP	BWC Unlimited with TAP	9	$11,064.69	$0.00	$11,064.69
Year 3	BWCUwTAP	BWC Unlimited with TAP	146	$188,940.85	$0.00	$188,940.85
Year 3	CLASS1UAS	AXON AIR, CLASS 1 UAS BUNDLE	1	$2,380.73	$0.00	$2,380.73
Year 3	CLASS2UAS	AXON AIR, CLASS 2 UAS BUNDLE	5	$18,396.28	$0.00	$18,396.28
Year 3	Fleet3A	Fleet 3 Advanced	31	$75,745.38	$0.00	$75,745.38
Year 3	Fleet3ARe	Fleet 3 Advanced Renewal	175	$377,950.31	$0.00	$377,950.31
Year 3	ProLicense	Pro License Bundle	50	$28,132.66	$0.00	$28,132.66
Total				**$833,000.00**	**$0.00**	**$833,000.00**

Sep 2027

Invoice Plan	Item	Description	Qty	Subtotal	Tax	Total
Year 4	100112	AXON AIR - EVIDENCE.COM LICENSE - PILOT DATA	8	$3,516.42	$0.00	$3,516.42
Year 4	100560	AXON EVIDENCE - PSO - DATA CONVERSION/MIGRATION	1	$7,574.76	$0.00	$7,574.76
Year 4	100583	AXON AIR - UAS LICENSE - COPILOT FOR DJI AVATA	5	$3,246.33	$0.00	$3,246.33
Year 4	100584	AXON AIR - ADVANCED STREAMING ADD-ON	5	$1,623.16	$0.00	$1,623.16
Year 4	100586	AXON AIR - API INTEGRATIONS ADD-ON	5	$2,705.49	$0.00	$2,705.49
Year 4	101078	AXON AIR - RTC VIRTUAL ONBOARDING	1	$360.70	$0.00	$360.70
Year 4	50039	AXON INTERVIEW - CLIENT SOFTWARE - MAINT. PER TOUCH PANEL	6	$2,197.89	$0.00	$2,197.89
Year 4	50043	AXON INTERVIEW - STREAMING SERVER MAINTENANCE - PER SERVER	2	$856.51	$0.00	$856.51
Year 4	50045	AXON EVIDENCE - STORAGE - INTERVIEW ROOM UNLIMITED	6	$8,706.65	$0.00	$8,706.65
Year 4	50448	AXON INTERVIEW - EXT WARRANTY	6	$2,282.04	$0.00	$2,282.04
Year 4	73352	TRUE UP - BWC HARDWARE FINANCING	10	$151.28	$0.00	$151.28
Year 4	73638	AXON STANDARDS - LICENSE	200	$27,138.42	$0.00	$27,138.42
Year 4	73680	AXON RESPOND PLUS - LICENSE	155	$43,233.28	$0.00	$43,233.28
Year 4	73682	AXON EVIDENCE - AUTO TAGGING LICENSE	146	$20,570.02	$0.00	$20,570.02
Year 4	73682	AXON EVIDENCE - AUTO TAGGING LICENSE	9	$132.64	$0.00	$132.64
Year 4	73896	AXON STANDARDS - IMPLEMENTATION SERVICE	1	$6,093.51	$0.00	$6,093.51
Year 4	BWCUwTAP	BWC Unlimited with TAP	146	$188,940.85	$0.00	$188,940.85
Year 4	BWCUwTAP	BWC Unlimited with TAP	9	$11,064.69	$0.00	$11,064.69
Year 4	CLASS1UAS	AXON AIR, CLASS 1 UAS BUNDLE	1	$2,380.73	$0.00	$2,380.73
Year 4	CLASS2UAS	AXON AIR, CLASS 2 UAS BUNDLE	5	$18,396.28	$0.00	$18,396.28
Year 4	Fleet3A	Fleet 3 Advanced	31	$75,745.38	$0.00	$75,745.38
Year 4	Fleet3ARe	Fleet 3 Advanced Renewal	175	$377,950.31	$0.00	$377,950.31
Year 4	ProLicense	Pro License Bundle	50	$28,132.66	$0.00	$28,132.66
Total				**$833,000.00**	**$0.00**	**$833,000.00**

Sep 2028

Invoice Plan	Item	Description	Qty	Subtotal	Tax	Total
Year 5	100112	AXON AIR - EVIDENCE.COM LICENSE - PILOT DATA	8	$3,516.42	$0.00	$3,516.42
Year 5	100560	AXON EVIDENCE - PSO - DATA CONVERSION/MIGRATION	1	$7,574.76	$0.00	$7,574.76
Year 5	100583	AXON AIR - UAS LICENSE - COPILOT FOR DJI AVATA	5	$3,246.33	$0.00	$3,246.33
Year 5	100584	AXON AIR - ADVANCED STREAMING ADD-ON	5	$1,623.16	$0.00	$1,623.16
Year 5	100586	AXON AIR - API INTEGRATIONS ADD-ON	5	$2,705.49	$0.00	$2,705.49
Year 5	101078	AXON AIR - RTC VIRTUAL ONBOARDING	1	$360.70	$0.00	$360.70
Year 5	50039	AXON INTERVIEW - CLIENT SOFTWARE - MAINT. PER TOUCH PANEL	6	$2,197.89	$0.00	$2,197.89
Year 5	50043	AXON INTERVIEW - STREAMING SERVER MAINTENANCE - PER SERVER	2	$856.51	$0.00	$856.51
Year 5	50045	AXON EVIDENCE - STORAGE - INTERVIEW ROOM UNLIMITED	6	$8,706.65	$0.00	$8,706.65

Sep 2028						
Invoice Plan	**Item**	**Description**	**Qty**	**Subtotal**	**Tax**	**Total**
Year 5	50448	AXON INTERVIEW - EXT WARRANTY	6	$2,282.04	$0.00	$2,282.04
Year 5	73352	TRUE UP - BWC HARDWARE FINANCING	10	$151.28	$0.00	$151.28
Year 5	73638	AXON STANDARDS - LICENSE	200	$27,138.42	$0.00	$27,138.42
Year 5	73680	AXON RESPOND PLUS - LICENSE	155	$43,233.28	$0.00	$43,233.28
Year 5	73682	AXON EVIDENCE - AUTO TAGGING LICENSE	9	$132.64	$0.00	$132.64
Year 5	73682	AXON EVIDENCE - AUTO TAGGING LICENSE	146	$20,570.02	$0.00	$20,570.02
Year 5	73896	AXON STANDARDS - IMPLEMENTATION SERVICE	1	$6,093.51	$0.00	$6,093.51
Year 5	BWCUwTAP	BWC Unlimited with TAP	146	$188,940.85	$0.00	$188,940.85
Year 5	BWCUwTAP	BWC Unlimited with TAP	9	$11,064.70	$0.00	$11,064.70
Year 5	CLASS1UAS	AXON AIR, CLASS 1 UAS BUNDLE	1	$2,380.73	$0.00	$2,380.73
Year 5	CLASS2UAS	AXON AIR, CLASS 2 UAS BUNDLE	5	$18,396.28	$0.00	$18,396.28
Year 5	Fleet3A	Fleet 3 Advanced	31	$75,745.38	$0.00	$75,745.38
Year 5	Fleet3ARe	Fleet 3 Advanced Renewal	175	$377,950.30	$0.00	$377,950.30
Year 5	ProLicense	Pro License Bundle	50	$28,132.66	$0.00	$28,132.66
Total				**$833,000.00**	**$0.00**	**$833,000.00**

Docusign Envelope ID: 6BA06514-9ACF-41E2-B678-0A77D6423B7A

Tax is estimated based on rates applicable at date of quote and subject to change at time of invoicing. If a tax exemption certificate should be applied, please submit prior to invoicing.

Contract BuyBoard Contract 648-21 is incorporated by reference into the terms and conditions of this Agreement. In the event of conflict the terms of Axon's Master Services and Purchasing Agreement shall govern. In the event that the start date for the purchases outlined under this Quote is before September 30, 2024, Buyboard Contract #648-21, along with the terms and conditions outlined herein shall govern. In the event that start date the purchase outlined under this Quote is on or after October 1, 2024, Buyboard Contract #743-24, along with the terms and conditions outlined herein, including Axon's MSPA, shall govern.

Standard Terms and Conditions

Axon Enterprise Inc. Sales Terms and Conditions

Axon Master Services and Purchasing Agreement:

This Quote is limited to and conditional upon your acceptance of the provisions set forth herein and Axon's Master Services and Purchasing Agreement (posted at https://www.axon.com/sales-terms-and-conditions), as well as the attached Statement of Work (SOW) for Axon Fleet and/or Axon Interview Room purchase, if applicable. In the event you and Axon have entered into a prior agreement to govern all future purchases, that agreement shall govern to the extent it includes the products and services being purchased and does not conflict with the Axon Customer Experience Improvement Program Appendix as described below.

ACEIP:

The Axon Customer Experience Improvement Program Appendix, which includes the sharing of de-identified segments of Agency Content with Axon to develop new products and improve your product experience (posted at www.axon.com/legal/sales-terms-and-conditions), is incorporated herein by reference. By signing below, you agree to the terms of the Axon Customer Experience Improvement Program.

Acceptance of Terms:

Any purchase order issued in response to this Quote is subject solely to the above referenced terms and conditions. By signing below, you represent that you are lawfully able to enter into contracts. If you are signing on behalf of an entity (including but not limited to the company, municipality, or government agency for whom you work), you represent to Axon that you have legal authority to bind that entity. If you do not have this authority, please do not sign this Quote.

Docusign Envelope ID: 6BA06514-9ACF-41E2-B678-0A77D6423B7A

Exceptions to Standard Terms and Conditions

Agency has existing contract(s) originated via Quote(s):

Q-335617

Q-328154

Q-328155

Q-405973

Q-546294

Agency is terminating those contracts effective 10/14/2024. Any change in this date will result in modification of the program value which may result in additional fees or credits due to or from Axon.

The parties agree that Axon is applying a Net Transfer Debit of $290,364.96 to the quote for delivered but unpaid items.

Any credits contained in this quote are contingent upon payment in full of the following amounts:

Q-471711 - 5/1/2024 - $77,341.78

Q-405973 - 5/1/2024 - $294,060.00

Q-395202 - 9/2/2023 - INUS183782 - $,1035.00

Signature	Date Signed
	8/23/2024



Docusign Envelope ID: 6BA06514-9ACF-41E2-B678-0A77D6423B7A

Exhibit I - Axon Respond Appendix

This Axon Respond Appendix applies to both Axon Respond and Axon Respond Plus, if either is included on the Quote.

1. **Axon Respond Subscription Term**. If Customer purchases Axon Respond as part of a bundled offering, the Axon Respond subscription begins on the later of the (1) start date of that bundled offering, or (2) date Axon provisions Axon Respond to Customer. If Customer purchases Axon Respond as a standalone, the Axon Respond subscription begins the later of the (1) date Axon provisions Axon Respond to Customer, or (2) first day of the month following the Effective Date. The Axon Respond subscription term will end upon the completion of the Axon Evidence Subscription associated with Axon Respond.

2. **Scope of Axon Respond**. The scope of Axon Respond is to assist Customer with real-time situational awareness during critical incidents to improve officer safety, effectiveness, and awareness. In the event Customer uses Axon Respond outside this scope, Axon may initiate good-faith discussions with Customer on upgrading Customer's Axon Respond to better meet Customer's needs.

3. **Axon Body LTE Requirements**. Axon Respond is only available and usable with an LTE enabled body-worn camera. Axon is not liable if Customer utilizes the LTE device outside of the coverage area or if the LTE carrier is unavailable. LTE coverage is only available in the United States, including any U.S. territories. Axon may utilize a carrier of Axon's choice to provide LTE service. Axon may change LTE carriers during the Term without Customer's consent.

4. **Axon Fleet LTE Requirements.** Axon Respond is only available and usable with a Fleet system configured with LTE modem and service. Customer is responsible for providing LTE service for the modem. Coverage and availability of LTE service is subject to Customer's LTE carrier.

5. **Axon Respond Service Limitations**. Customer acknowledges that LTE service is made available only within the operating range of the networks. Service may be temporarily refused, interrupted, or limited because of: (a) facilities limitations; (b) transmission limitations caused by atmospheric, terrain, other natural or artificial conditions adversely affecting transmission, weak batteries, system overcapacity, movement outside a service area or gaps in coverage in a service area, and other causes reasonably outside of the carrier's control such as intentional or negligent acts of third parties that damage or impair the network or disrupt service; or (c) equipment modifications, upgrades, relocations, repairs, and other similar activities necessary for the proper or improved operation of service.

    5.1. With regard to Axon Body, Partner networks are made available as-is and the carrier makes no warranties or representations as to the availability or quality of roaming service provided by carrier partners, and the carrier will not be liable in any capacity for any errors, outages, or failures of carrier partner networks. Customer expressly understands and agrees that it has no contractual relationship whatsoever with the underlying wireless service provider or its affiliates or contractors and Customer is not a third-party beneficiary of any agreement between Axon and the underlying carrier.

6. **Termination**. Upon termination of this Agreement, or if Customer stops paying for Axon Respond or bundles that include Axon Respond, Axon will end Axon Respond services, including any Axon-provided LTE service.

Docusign Envelope ID: 6BA06514-9ACF-41E2-B678-0A77D6423B7A

Exhibit J - Add-on Services Appendix

This Appendix applies if Axon Community Request, Axon Redaction Assistant, and/or Axon Performance are included on the Quote.

1. **Subscription Term**. If Customer purchases Axon Community Request, Axon Redaction Assistant, or Axon Performance as part of OSP 7 or OSP 10, the subscription begins on the later of the (1) start date of the OSP 7 or OSP 10 Term, or (2) date Axon provisions Axon Community Request Axon Redaction Assistant, or Axon Performance to Customer.

1.1. If Customer purchases Axon Community Request, Axon Redaction Assistant, or Axon Performance as a standalone, the subscription begins the later of the (1) date Axon provisions Axon Community Request, Axon Redaction Assistant, or Axon Performance to Customer, or (2) first day of the month following the Effective Date.

1.2. The subscription term will end upon the completion of the Axon Evidence Subscription associated with the add-on.

2. **Axon Community Request Storage**. For Axon Community Request, Customer may store an unlimited amount of data submitted through the public portal ("**Portal Content**"), within Customer's Axon Evidence instance. The post-termination provisions outlined in the Axon Cloud Services Terms of Use Appendix also apply to Portal Content.

3. **Performance Auto-Tagging Data**. In order to provide some features of Axon Performance to Customer, Axon will need to store call for service data from Customer's CAD or RMS.

City Council Meeting

Item Number: 9

Meeting Date: September 24, 2024

To: City Council / City Manager

From: Erika Martinez, Manager, Purchasing

Subject: RESOLUTION AWARDING A CONTRACT FOR THE PURCHASE AND INSTALLATION OF FOUR (4) IN-GROUND VEHICLE LIFTS AND ONE (1) PLATFORM VEHICLE LIFT TO DAVID COWAN EQUIPMENT FOR A COST OF $169,790.00; AND APPROVING $16,979.00 FOR CONTINGENCIES (DISTRICT 2) (GENERAL SERVICES) (PROVIDE SOUND GOVERNANCE & FISCAL MANAGEMENT)

Purpose:

Resolution awarding a contract for the purchase and installation of four (4) existing in ground vehicle lifts to replace the existing vehicle lifts and for the purchase and installation of one (1) new platform vehicle lift for the Garage Division to David Cowan Equipment for a cost of $169,790.00 plus $16,979.00 in contingencies for a total of $186,769.00.

Recommended City Council Action:

Approve

Fiscal Impact:

Funding is available in the FY 2024 General Fund operating budget.

Strategic Priority:

(Provide Sound Governance & Fiscal Management)

Discussion:

City Manager's Office approved specifications and authorized advertisement for bids for the purchase and installation of four (4) in ground vehicle lifts to replace the existing vehicle lifts and for the purchase and installation of one (1) new platform vehicle lift for the Garage

Division. Fifty-five (55) requests for bids were issued. We received a sole proposal. Staff recommends awarding the bid to the apparent sole bidder, David Cowan Equipment. The existing in ground lifts have gone beyond their useful life and need to be replaced. Please see the attached memo from Manuel Salinas, Garage Superintendent, for additional information.

Therefore, please consider a resolution awarding a contract for the purchase and installation of four (4) in ground vehicle lifts to replace the existing vehicle lifts and for the purchase and installation of one (1) new platform vehicle lift for the Garage Division to David Cowan Equipment of Odessa, Texas for a cost of $169,790.00 plus $16,979.00 in contingencies for a total of $186,769.00.

Morris Williams Jr.

City Manager's Office

Fleet Services Division

INTEROFFICE MEMORANDUM

TO: Regina Stephenson

FROM: Manuel Eloy Salinas

SUBJECT: Bid # 24005944 for the replacement of all in ground lifts

DATE: 9/03/2024

Fleet services requested the replacements of four inground lifts that are old and have gone beyond their serviceable application. Fleet services is also requesting the installation of a new Rotary 4 post above ground platform lift.

A bid has been submitted by David Cowan Equipment, Midland Texas for $169,790.00 for the replacement of 4 inground lifts and the installation of one new Rotary 4 post above ground platform lift.

Fleet services accepts this bid proposal from David Cowan Equipment which meets all the requested specifications from Fleet services.

Sincerely,

Manuel Eloy Salinas

City of Midland Superintendent

RESOLUTION NO. _____

RESOLUTION AWARDING A CONTRACT FOR THE PURCHASE AND INSTALLATION OF FOUR (4) IN-GROUND VEHICLE LIFTS AND ONE (1) PLATFORM VEHICLE LIFT TO DAVID COWAN EQUIPMENT FOR A COST OF $169,790.00; AND APPROVING $16,979.00 FOR CONTINGENCIES

WHEREAS, the City Manager's Office approved specifications and authorized the advertisement for competitive bids for the purchase and installation of four (4) in-ground vehicle lifts and one (1) platform vehicle lift for the Garage Division; and

WHEREAS, bids were opened on August 28, 2024, with the sole proposal being submitted by David Cowan Equipment as shown on the tabulation attached hereto as Exhibit A and incorporated herein for all purposes; and

WHEREAS, the City Council finds the amount proposed by David Cowan Equipment to be fair and reasonable; and

WHEREAS, the City Council finds it to be in the public interest to award a contract to David Cowan Equipment for the purchase and installation of four (4) in-ground vehicle lifts and one (1) platform vehicle lift; and

WHEREAS, the City Council finds it to be in the public interest to approve $16,979.00 for contingencies;

NOW, THEREFORE, BE IT RESOLVED BY THE CITY COUNCIL OF THE CITY OF MIDLAND, TEXAS:

SECTION ONE. That the City Manager and City Secretary are hereby authorized and directed to execute and attest, respectively, on behalf of the City of Midland, a contract with David Cowan Equipment for the purchase and installation of four (4) in-ground vehicle lifts and one (1) platform vehicle lift for a cost of $169,790.00. Said contract to be kept on file in the office of the City Secretary, referenced by the date and number of this Resolution.

SECTION TWO. That the sum of $16,979.00 for contingencies is hereby approved.

SECTION THREE. That the City Comptroller is hereby authorized and directed to

pay David Cowan Equipment pursuant to the terms of said contract from funds available in the FY 2024 General Fund operating budget upon receipt of proper invoices or statements approved by the City Manager.

On motion of Council member _____, seconded by Council member _____, the above and foregoing resolution was adopted by the City Council of the City of Midland at a regular meeting on the _____ day of _____, A.D., 2024, by the following vote:

Council members voting "AYE":

Council members voting "NAY":

_____
Lori Merritt Blong, Mayor

ATTEST:

_____
Marcia Bentley-German, City Secretary

RECOMMENDED AND APPROVED:

_____
Tommy Gonzalez, City Manager

APPROVED AS TO CONTENT
AND COMPLETENESS:

_____
Regina Stephenson, General Services Director

APPROVED ONLY AS TO FORM:

_____
John Ohnemiller, City Attorney

Bid Opening: August 28, 2024
24005944 Lifts for the Garage

			David Cowan Equipment			
		Total Cost	$169,790.00			
#	**Items**	**Quantity Required**	**Unit Price**	**Brand and Model**	**Delivery Time ARO**	**Total Cost**
#0-1	Rotary Inground Lifts	4	$33,958.00	SLW210-RA	NA	**$135,832.00**
#0-2	Rotary 4 post Lifts	1	$33,958.00	SLW212-TA	NA	**$33,958.00**

Bidding Summary

55 Bid requests were issued

1 Bids listed above

0 No bids were received

54 Bidders did not respond

Bid Opening: August 28, 2024
24005944 Lifts for the Garage

			David Cowan Equipment			
	Total Cost		$169,790.00			
#	**Items**	**Quantity Required**	**Unit Price**	**Brand and Model**	**Delivery Time ARO**	**Total Cost**
#0-1	Rotary Inground Lifts	4	$33,958.00	SLW210-RA	NA	**$135,832.00**
#0-2	Rotary 4 post Lifts	1	$33,958.00	SLW212-TA	NA	**$33,958.00**

Bidding Summary

55 Bid requests were issued

1 Bids listed above

0 No bids were received

54 Bidders did not respond

THE CITY OF MIDLAND

CONTRACT

Contract No. 24005944

THIS CONTRACT, effective the 25 day of September, 2024, by and between the City of Midland, hereinafter referred to as "CITY", and David Cowan Equipment, hereinafter referred to as "COMPANY", is made for the following considerations:

1. **Cost:** Total Proposal: $ 169,790.00 DOLLARS

2. **Scope of Work:** COMPANY shall perform all work described and shall provide labor, materials, equipment and supervision necessary for the purchase and installation of inground lifts for the City of Midland Garage. Said work being more particularly described in the following documents, which are attached hereto and incorporated herein for all purposes.

EXHIBIT A..... Specifications, Proposal or Cost Summary
EXHIBIT B.....Intentionally Omitted
EXHIBIT C..... Bonding instructions for Public Works Contract of $50,000 and more
EXHIBIT D..... Wage Scale

3. **City:** The words "CITY's Representative" or "representative" shall mean Regina Stephenson or the designee under whose supervision these contract documents, including the plans and specifications, were prepared, or who may inspect work performed under this Contract; or such other representative, supervisor, or inspector as may be authorized by CITY to act in any particular capacity under this Contract.

4. **City's Representative:** CITY's Representative may make periodic visits to the site to observe the progress and quality of the executed work and to determine, in general, if the work is proceeding in accordance with the contract documents. CITY's representative will not be required to make exhaustive or continuous on-site inspections to check the quality or quantity of the work, nor will such representative be responsible for the construction means, methods, techniques, sequences or procedures, or the safety precautions incident thereto. CITY's representative will not be responsible for COMPANY's failure to perform the work in accordance with the contract.

5. **Company:** Unless otherwise stipulated, COMPANY shall provide and pay for all materials,

supplies, machinery, equipment, tools, superintendence, labor, insurance, and all water, light, power, fuel, transportation and all other facilities necessary for the execution and completion of the work covered by the contract documents. Unless otherwise specified, all materials shall be new, and both workmanship and materials shall be of a good quality. COMPANY shall, if required, furnish satisfactory evidence as to the kind and quality of materials.

5.1. COMPANY shall, at its expense, obtain all permits and licenses necessary for the performance of this contract and pay all fees and taxes required by law, and comply with all laws, ordinances, rules and regulations governing COMPANY's performance of the contract, including all environmental laws and regulations, whether state or federal.

5.2. All work shall be done and all materials furnished in strict conformity with the contract and specifications.

6. **Minor Work Not Mentioned:** All minor detail of the work not specifically mentioned in the Specifications but obviously necessary for the proper completion of the work, such as the proper connection of new work to old, shall be considered as incidental to and a part of the work for which the prices are named in the contract. COMPANY will not be entitled to any additional compensation therefor unless specifically stated otherwise. Otherwise the term "extra work" as used in this contract shall mean and include all work that may be required by CITY to be done by COMPANY to accomplish any alteration or addition to the work as shown on the Specifications.

6.1. COMPANY shall perform all extra work under the direction of CITY's Representative when presented with a written work order signed by CITY's Representative, subject, however, to the right of the COMPANY to require written confirmation of such extra work order by CITY. Payment for extra work shall be as agreed in the work order.

7. **Safety:** COMPANY shall at all times exercise reasonable precaution for the safety of employees and others on or near the work and shall comply with all applicable provisions of federal, state and municipal laws. All machinery and equipment and other physical hazards shall be guarded in accordance with federal, state or municipal laws or regulations.

8. **INDEMNITY: COMPANY SHALL INDEMNIFY AND HOLD HARMLESS AND DEFEND CITY AND ALL OF CITY'S OFFICERS, AGENTS AND EMPLOYEES FROM ALL SUITS, ACTIONS, CLAIMS, DAMAGES, PERSONAL INJURIES, ACCIDENTAL DEATH, LOSSES, PROPERTY DAMAGE AND EXPENSES OF ANY CHARACTER WHATSOEVER, INCLUDING ATTORNEY'S FEES, BROUGHT FOR OR ON ACCOUNT OF ANY INJURIES**

OR DAMAGES RECEIVED OR SUSTAINED BY ANY PERSON OR PERSONS OR PROPERTY, ON ACCOUNT OF ANY NEGLIGENT ACT OF COMPANY, THEIR AGENTS OR EMPLOYEES, OR ANY SUBCONTRACTOR, IN THE EXECUTION, SUPERVISION AND OPERATIONS GROWING OUT OF OR IN ANY WAY CONNECTED WITH THE PERFORMANCE OF THIS CONTRACT, AND COMPANY WILL BE REQUIRED TO PAY ANY JUDGMENT WITH COSTS WHICH MAY BE OBTAINED AGAINST CITY OR ANY OF ITS OFFICERS, AGENTS OR EMPLOYEES, INCLUDING ATTORNEY'S FEES. THE OBLIGATIONS CONTAINED IN THIS SECTION 8 SHALL SURVIVE THE TERMINATION OF THIS CONTRACT.

8.1. **COMPANY SHALL INDEMNIFY AND HOLD HARMLESS AND DEFEND CITY AND ALL OF CITY'S OFFICERS, AGENTS AND EMPLOYEES FROM ALL SUITS, ACTIONS, CLAIMS, DAMAGES, PERSONAL INJURIES, ACCIDENTAL DEATH, PROPERTY DAMAGE, LOSSES, AND EXPENSES OF ANY CHARACTER WHATSOEVER INCLUDING ATTORNEY'S FEES, BROUGHT FOR OR ON ACCOUNT OF ANY INJURIES OR DAMAGES RECEIVED OR SUSTAINED BY ANY PERSON OR PERSONS OR PROPERTY, ON ACCOUNT OF ANY NEGLIGENT ACT OF CITY, CITY'S OFFICERS, AGENTS AND EMPLOYEES, WHETHER SUCH NEGLIGENT ACT WAS THE SOLE PROXIMATE CAUSE OF THE INJURY OR DAMAGE OR A PROXIMATE CAUSE JOINTLY AND CONCURRENTLY WITH COMPANY OR COMPANY'S EMPLOYEES, AGENTS OR SUBCONTRACTORS NEGLIGENCE IN THE EXECUTION, SUPERVISION AND OPERATIONS GROWING OUT OF OR IN ANY WAY CONNECTED WITH THE PERFORMANCE OF THIS CONTRACT, AND COMPANY WILL BE REQUIRED TO PAY ANY JUDGMENT WITH COSTS WHICH MAY BE OBTAINED AGAINST CITY OR ANY OF ITS OFFICERS, AGENTS OR EMPLOYEES, INCLUDING ATTORNEY'S FEES. THE OBLIGATIONS CONTAINED IN THIS SECTION 8.1 SHALL SURVIVE THE TERMINATION OF THIS CONTRACT.**

8.2. **COMPANY AGREES THAT IT WILL INDEMNIFY AND SAVE CITY HARMLESS FROM ALL CLAIMS GROWING OUT OF ANY DEMANDS OF SUBCONTRACTORS, LABORERS, WORKMEN, MECHANICS, MATERIALMEN, AND FURNISHERS OF MACHINERY AND PARTS THEREOF, EQUIPMENT, POWER TOOLS AND ALL SUPPLIES, INCURRED IN THE FURTHERANCE OF THE PERFORMANCE OF THIS CONTRACT. WHEN CITY SO DESIRES, COMPANY SHALL FURNISH SATISFACTORY EVIDENCE THAT ALL OBLIGATIONS OF THE NATURE HEREINABOVE DESIGNATED HAVE BEEN PAID, DISCHARGED OR WAIVED. COMPANY, ITS SURETIES AND**

INSURANCE CARRIERS SHALL DEFEND, INDEMNIFY AND SAVE HARMLESS CITY AND ALL OF ITS OFFICERS, AGENTS AND EMPLOYEES FROM ALL SUITS, ACTIONS, OR CLAIMS OF ANY CHARACTER WHATSOEVER, BROUGHT FOR OR ON ACCOUNT OF ANY INJURIES OR DAMAGES RECEIVED OR SUSTAINED BY ANY PERSON OR PERSONS OR PROPERTY, ARISING FROM ANY ACT OF COMPANY OR ANY SUBCONTRACTOR, THEIR AGENTS OR EMPLOYEES, IN THE EXECUTION AND SUPERVISION OF THIS CONTRACT, AND WILL BE REQUIRED TO PAY ANY JUDGMENT WITH COSTS WHICH MAY BE OBTAINED AGAINST CITY OR ANY OF ITS OFFICERS, AGENTS, OR EMPLOYEES INCLUDING ATTORNEY'S FEES. THE OBLIGATIONS CONTAINED IN THIS SECTION 8.2 SHALL SURVIVE THE TERMINATION OF THIS CONTRACT.

9. **Start of Work:** COMPANY shall commence work no later than ten (10) days after receipt of the execution of this document or other written release to proceed and shall complete such work no later than 30 calendar days after release to proceed.

10. **Clean Up:** COMPANY shall promptly remove from CITY's premises all materials condemned by CITY's Representative on account of failure to conform to the contract, whether actually incorporated in the work or not, and COMPANY shall at its own expense promptly replace such condemned materials with other materials conforming to the requirements of the contract. COMPANY shall also bear the expense of restoring all work of other contractors damaged by any such removal or replacement. If COMPANY does not remove and replace any such condemned materials within a reasonable time after a written notice by CITY, CITY may remove and replace such at COMPANY's expense.

11. **Warranty:** Neither the final payment nor any provision in this contract shall relieve COMPANY of responsibility for faulty materials or workmanship, and he shall remedy any defects due thereto and pay for any damage to other work resulting therefrom, which shall appear within a period of one (1) year from the date of substantial completion. CITY shall give notice of observed defects with reasonable promptness.

12. **Remedy:** CITY may, on account of subsequently discovered evidence, withhold whole or part of any payment to such extent as may be necessary to protect itself from loss on account of:

12.1. Defective work not remedied; or

12.2. Claims filed or reasonable evidence indicating possible filing of claims; or

12.3. Failure of COMPANY to make payments promptly to subcontractors or for material or labor which CITY may pay as an agent for the COMPANY; or

12.4. Damages to another contractor or subcontractor.

When the above grounds to withhold payment are removed, or COMPANY provides a surety bond satisfactory to CITY, which will protect CITY in the amount withheld, payment may be released.

13. **Funding Out:** In the event no funds or insufficient funds are appropriated and budgeted or are otherwise unavailable in any fiscal period for contract payments due under the contract, then this contract shall terminate on the last day of the fiscal period for which full appropriations were made, without penalty or expense to CITY of any kind whatsoever.

14. **Wage Scale:** COMPANY agrees to pay all workmen in his employ no less than the generally prevailing wage rate for employees of similar category in the Permian Basin Area, as is depicted in the wage rate scale attached hereto as EXHIBIT D, and incorporated herein by reference for all legal purposes.

14.1. If applicable, the Davis-Bacon Act, 29 CFR 5.5, and any related acts or regulations are hereby incorporated by reference and made a part of this Contract, and all terms and requirements under said laws, by such incorporation, are made terms and requirements of this Contract, to which the parties to this Contract have agreed to be bound.

15. **Prompt Pay Act:** CITY and COMPANY agree that Texas Government Code, Chapter 2251, Payment for Goods and Services (the "Prompt Pay Act") does not waive governmental immunity.

16. **Payment:** After all work is completed by COMPANY, including all Change Orders altering the original scope and amount of said contract are completed, and CITY has inspected and approved that the work is completed and in compliance with the contract and all subsequent Change Orders, CITY shall thereafter issue payment to COMPANY in the amount of the contract and all Change Orders. CITY shall be the final judge of when the work is completed by COMPANY. CITY, in its sole discretion, shall determine if the work under the contract and under any Change Orders has been done to CITY's requirements. CITY may make periodic payments to COMPANY, however such periodic payments may only be made pursuant to this paragraph, and only after all work and all Change Orders are completed by COMPANY and approved by CITY. For contracts exceeding $25,000 and construction time exceeds ninety days, requests for progress payments may be made to the extent of the materials and labor completed at the end of each month. Upon approval by the Owner's Representative the request and invoice shall be forwarded for payment less 5% retainage. The total of these payments shall not exceed 95% of the total contract amount.

17. **No Third-Party Beneficiary:** CITY's approval of this contract does not create a third-party beneficiary. There is no third-party beneficiary to this contract. No person or entity who is not a party to

this contract shall have any third-party beneficiary or other rights hereunder.

18. WAIVER OF ATTORNEY FEES: BY EXECUTING THIS CONTRACT, COMPANY AGREES TO WAIVE AND DOES HEREBY KNOWINGLY, CONCLUSIVELY, VOLUNTARILY AND INTENTIONALLY WAIVE ANY CLAIM IT HAS OR MAY HAVE IN THE FUTURE AGAINST CITY REGARDING THE AWARD OR ATTORNEY'S FEES, WHICH ARE IN ANY WAY RELATED TO THIS CONTRACT, OR THE CONSTRUCTION, INTERPRETATION OR BREACH OF THIS CONTRACT. COMPANY SPECIFICALLY AGREES THAT IF COMPANY BRINGS OR COMMENCES ANY LEGAL ACTION OR PROCEEDING RELATED TO THIS CONTRACT, THE CONSTRUCTION, INTERPRETATION, VALIDITY OR BREACH OF THIS CONTRACT, INCLUDING, BUT NOT LIMITED TO, ANY ACTION PURSUANT TO THE PROVISIONS OF THE TEXAS UNIFORM DECLARATORY JUDGMENTS ACT (TEXAS CIVIL PRACTICE AND REMEDIES CODE SECTION 37.001, ET SEQ., AS AMENDED), OR CHAPTER 271 OF THE TEXAS LOCAL GOVERNMENT CODE, COMPANY AGREES TO ABANDON, WAIVE AND RELINQUISH ANY AND ALL RIGHTS TO THE RECOVERY OF ATTORNEY'S FEES TO WHICH COMPANY MIGHT OTHERWISE BE ENTITLED.

COMPANY AGREES THAT THIS IS THE VOLUNTARY AND INTENTIONAL RELINQUISHMENT AND ABANDONMENT OF A PRESENTLY-EXISTING KNOWN RIGHT. COMPANY ACKNOWLEDGES THAT IT UNDERSTANDS ALL TERMS AND CONDITIONS OF THIS CONTRACT. COMPANY FURTHER ACKNOWLEDGES AND AGREES THAT THERE WAS AND IS NO DISPARITY OF BARGAINING POWER BETWEEN CITY AND COMPANY. THIS SECTION SHALL NOT BE CONSTRUED OR INTERPRETED AS A WAIVER OR GOVERNMENTAL IMMUNITY AND SHALL SURVIVE THE TERMINATION OF THIS CONTRACT.

COMPANY IS RELYING ON ITS OWN JUDGMENT. COMPANY HAD THE OPPORTUNITY TO DISCUSS THIS CONTRACT WITH COMPETENT LEGAL COUNSEL PRIOR TO ITS EXECUTION. THE OBLIGATIONS CONTAINED IN THIS SECTION 18 SHALL SURVIVE THE TERMINATION OF THIS CONTRACT.

19. **Governmental Immunity:** By executing this contract CITY is not waiving its right of governmental immunity. CITY is retaining its immunity from suit. CITY is not granting consent to be sued by legislative resolution or action.

THERE IS NO WAIVER OF GOVERNMENTAL IMMUNITY.

20. **Insurance:**

COMPANY shall at all times during the term of this Contract maintain and keep in full force and effect insurance in the following types and minimum amounts with companies authorized to do business in the State of Texas:

Commercial General Liability (including Contractual liability):	
-Personal Injury:	$1,000,000.00 per person
	$1,000,000.00 per occurrence
-Property Damage:	$500,000.00 per occurrence
Business Automobile Liability:	$250,000.00 combined single limit - Personal Injury and Property Damage
Workers' Compensation:	Statutory limits
Employers' Liability:	$500,000.00 per accident or occurrence

The Commercial General Liability shall be on a per project aggregate, including completed operations, and shall be on a claims-occurred basis. This insurance shall name CITY as an additional insured and waive subrogation in favor of CITY.

The Business Automobile Liability insurance provided by COMPANY shall cover any auto for bodily injury and property damage, including owned vehicles, hired and non-city vehicles, and employee non-ownership, and the amount of such policy shall be a minimum of $250,000.00 covering any vehicle used for the execution of the work that is the subject of this Contract. This insurance shall name CITY as an additional insured and waive subrogation in favor of CITY.

The Workers' Compensation coverage provided by COMPANY shall inure to the benefit of employees injured during the course and scope of their employment by COMPANY pursuant to this Contract. The Workers' Compensation shall waive all rights of subrogation in favor of CITY.

All insurance required pursuant to this Contract shall provide for a waiver of subrogation in favor of CITY. All insurance required pursuant to this Contract, except for Workers' Compensation Insurance, shall name CITY as an additional insured on a claims occurred basis. CITY shall be provided the notice by COMPANY's insurance provider not later than thirty (30) days prior to any reduction or termination of such coverage.

COMPANY shall contractually require all contractors, subcontractors, and sub-subcontractors that work on any portion of the work that is the subject of this Contract to obtain insurance coverage that meets or exceeds the policy requirements and minimum amounts specified herein. All contractors, subcontractors, and sub-subcontractors shall obtain insurance policies that provide blanket waivers of subrogation in favor of the City of Midland and policies that name the City of Midland as an additional insured on a claims occurred basis (except workers' compensation).

The parties agree that, prior to the execution of the Contract, COMPANY shall provide one or more certificates of insurance specifically stating that these requirements have been met and subject to the approval of CITY. CITY shall not be required to provide any insurance whatsoever pursuant to this Contract.

COMPANY certifies that the certificate of insurance provided as required herein complies with the requirements of Chapter 1811 of the Texas Insurance Code. COMPANY shall not use an unapproved certificate of insurance or insert inappropriate language on a certificate. Compliance with state law is the sole responsibility of COMPANY.

21. **Assignment**: COMPANY shall not, either directly or indirectly, assign all or any part of this Contract or any interest, right or privilege herein, without the prior written consent of CITY. The issue on whether or not to grant consent to an assignment is in the sole discretion of CITY.

22. **RELEASE: NOTWITHSTANDING ANY OTHER PROVISION CONTAINED HEREIN, COMPANY HEREBY RELEASES, ACQUITS, RELINQUISHES AND FOREVER DISCHARGES CITY AND CITY'S COUNCIL MEMBERS, EMPLOYEES, AND OFFICERS FROM ANY AND ALL DEMANDS, CLAIMS, DAMAGES OR CAUSES OF ACTION OF ANY KIND WHATSOEVER THAT COMPANY HAS OR MIGHT HAVE IN THE FUTURE, INCLUDING, BUT NOT LIMITED TO, BREACH OF CONTRACT, QUANTUM MERUIT, CLAIMS UNDER THE DUE PROCESS AND TAKINGS CLAUSES OF THE TEXAS AND UNITED STATES CONSTITUTIONS, TORT CLAIMS, OR CITY'S NEGLIGENCE. THE OBLIGATIONS CONTAINED IN THIS SECTION SHALL SURVIVE THE TERMINATION OF THIS CONTRACT**.

23. **Governing Law and Venue:** This contract shall be governed by the laws of the State of Texas. All performance and payment made pursuant to this contract shall be deemed to have occurred in Midland County, Texas. The obligations and undertakings of each of the parties to this Agreement shall be deemed to have occurred in Midland County, Texas. Exclusive venue for any claims, suits or any other action arising from or connected in any way to this contract or the performance of this contract shall be in Midland County, Texas.

24. **Independent Contractor:** COMPANY shall perform all work and services described herein as an independent contractor and not as an officer, agent, servant, or employee of CITY. COMPANY shall have exclusive control of, and the exclusive right to control the details of the services and work to be performed hereunder, and all persons performing the same. COMPANY shall be solely responsible for the acts and omissions of its officers, agents, employees, contractors and subcontractors and the doctrine

of respondeat superior shall not apply as between CITY and COMPANY, its officers, agents, employees, contractors and subcontractors. Nothing in this Contract shall be construed as creating a partnership or joint enterprise between CITY and COMPANY. No person performing any of the work and services described hereunder by COMPANY shall be considered an officer, agent, servant or employee of CITY. Further, it is specifically understood and agreed that nothing in this contract is intended or construed as creating a "Community of Pecuniary Interest" or an "Equal Right of Control" which would give rise to vicarious liability.

COMPANY shall be an independent contractor under this Contract and shall assume all of the rights, obligations and liabilities, applicable to it as such independent contractor hereunder. CITY does not have the power to direct the order in which the work is done. CITY shall not have the right to control the means, methods or details of COMPANY's work. COMPANY shall assume exclusive responsibility for the work. COMPANY is entirely free to do the work in its own way.

25. **Notice of Alleged Breach; Statutory Prerequisites:** As a condition precedent to filing suit for alleged damages incurred by an alleged breach of an express or implied provision of this Contract, COMPANY or its legal representative, shall give the City Manager, or any other reasonable official of CITY, notice in writing (consisting of one (1) original and seven (7) copies of notice attached to a copy of this Contract) of such damages, duly verified, within one hundred twenty (120) days after the same has been sustained. The discovery rule does not apply to the giving of this notice. The notice shall include when, where and how the damages occurred, the apparent extent thereof, the amount of damages sustained, the amount for which COMPANY shall settle, the physical and mailing addresses of COMPANY at the time and date the claim was presented and the physical and mailing addresses of COMPANY for the six (6) months immediately preceding the occurrence of such damages, and the names and addresses of the witnesses upon whom COMPANY relies to establish its claim; and a failure to provide such written notification within the time and manner provided herein shall exonerate, excuse and except CITY from any liability whatsoever. CITY is under no obligation to provide notice to COMPANY that COMPANY's notice is insufficient. CITY reserves the right to request additional information regarding the claim. Said additional information shall be supplied within thirty (30) days after receipt of notice.

The statutory prerequisites outlined herein constitute jurisdictional requirements pursuant to Section 271.154 of the Texas Local Government Code and Section 311.034 of the Texas Government Code. Notwithstanding any other provision to the contrary, COMPANY's failure to comply with the requirements of this Section shall perpetually bar COMPANY's claim for damages under Chapter 271 of the Texas Local Government Code, and Section 311.034 of the Texas Government Code, regardless if

CITY has actual or constructive notice or knowledge of said claim or alleged damages. COMPANY agrees that the requirements of this entire Contract are reasonable. The provisions and obligations of this Section shall survive the termination of this Contract.

26. **Consideration:** The terms of this Contract are supported by good and valuable consideration, the receipt and sufficiency of which is hereby acknowledged by the parties named herein.

27. **Termination At Will:** CITY may terminate this Contract at will for no or any reason upon giving at least one hundred eighty (180) days written notice to COMPANY. The parties to this Contract understand and agree that it is in CITY's sole discretion to cancel the Contract during the term of the Contract without penalty to CITY. COMPANY has no expectation and has received no guarantees that this Contract will not be terminated before the end of the Contract term. The parties have bargained for the flexibility of terminating this Contract upon tender of the requisite notice at any time during the term of the Contract. All work and services under the Contract shall be suspended upon termination of the Contract becoming effective.

28. **Compliance:** COMPANY agrees that it shall comply with Texas Government Code Section 2252.908, *et seq.*, as amended. COMPANY agrees that it shall comply with Texas Local Government Code Section 176.006, *et seq.*, as amended.

29. To the extent that Sections 2271.002 and 2274.002, and 2276.002 of the Texas Government Code (collectively, the "Anti-Boycott Statutes") apply to this Contract, Company hereby verifies:

- that Company does not boycott Israel and will not boycott Israel during the term of this Contract;
- that Company does not boycott energy companies and will not boycott energy companies during the term of this Contract; and
- that Company does not have a practice, policy, guidance, or directive that discriminates against a firearm entity or firearm trade association and will not discriminate during the term of this Contract against a firearm entity or firearm trade association.

To the extent that the Anti-Boycott Statutes do not apply to this Contract, such verification is not required, and Company shall be deemed to have not made such verification.

30. **Records Retention and Production of Information.** To the extent that this Contract constitutes a contract described by Section 552.371 of the Texas Government Code, COMPANY shall: (i) preserve all contracting information related to this Contract as provided by the records retention requirements applicable to CITY for the duration of this Contract; (ii) promptly provide to CITY any contracting information related to the Contract that is in the custody or possession of COMPANY on request of CITY;

and (iii) on completion of the Contract, either: (a) provide at no cost to CITY all contracting information related to the Contract that is in the custody or possession of COMPANY; or (b) preserve the contracting information related to the Contract as provided by the records retention requirements applicable to CITY.

31. **Public Information.** To the extent that this Contract is a contract described by Section 552.371 of the Texas Government Code, COMPANY agrees as follows in accordance with Section 552.372(b) of the Texas Government Code: The requirements of Subchapter J, Chapter 552, Government Code, may apply to this Contract, and COMPANY agrees that the contract can be terminated if COMPANY knowingly or intentionally fails to comply with a requirement of that subchapter.

32. **Conflict of Terms.** If a conflict of terms or language exists between: (i) any of the provisions of this Contract and (ii) any of the provisions contained in any exhibit(s) attached to this Contract, precedence shall be given to the provisions of this Contract. For the avoidance of any doubt, the provisions contained in this Contract shall supersede any and all conflicting provisions contained in any exhibit(s) attached hereto. Furthermore, the parties acknowledge and agree that any provision contained in an exhibit(s) attached to this Contract that imposes an additional express or implied obligation on CITY is hereby made void and of no force or effect. CITY's sole and exclusive obligations under this Contract are contained in the provisions of this Contract that precede the signature page(s), which evidences the parties' execution.

33. Company agrees that all iron or steel products produced through a manufacturing process and used in the project that is the subject of this Contract shall be produced in the United States in accordance with Government Code § 2252.202, et seq., as amended.

EXECUTED IN DUPLICATE the day and year first above mentioned.

THE CITY OF MIDLAND, TEXAS

By: _____
Tommy Gonzalez, City Manager

ATTEST

_____
Marcia Bentley-German, City Governance Officer/City Secretary

APPROVED ONLY AS TO FORM

_____
John Ohnemiller, City Attorney

COMPANY:

By: _____

Name:_____

Title: _____

STATE OF _____ §
§
COUNTY OF_____ §

BEFORE ME, the undersigned authority, on this ____ day of _____, 20____ personally appeared, _____, an officer of David Cowan Equipment, known to me to be the person and official whose name is subscribed to the forgoing instrument, and acknowledged to me that he executed the same as the act and deed of said corporation, for the purposes and consideration therein expressed, and in the capacity therein stated.

GIVEN UNDER MY HAND AND SEAL OF OFFICE this the ____day of _____, 20____.

_____
Notary Public, State of

MIDLAND

Purchasing Division

300 NORTH LORAINE

P O Box 1152

Midland, TX. 79702

Bid submitted by DAVID COWAN

DAVID COWAN EQUIPMENT

Bid No: 24005944

This bid is considerably more expensive than the first quote because this bid is for the Rotary SL212W, the first quote was for the Rotary SL212N111D.

Date: 08/01/2024

MIDLAND
Purchasing Division

300 NORTH LORAINE
P. O. BOX 1152
MIDLAND, TX 79702

BID NO: 24005944

CLOSING DATE: **August 28, 2024**

CLOSING TIME: **2:00 PM**

BIDS WILL BE RECEIVED UNTIL **2:00 PM** on **8/28/2024** THROUGH BONFIRE FOR GOODS AND SERVICES DESCRIBED BELOW WHICH WILL BE DELIVERED TO: **Various Utility Locations**

DESCRIPTION
The City of Midland is seeking to purchase Lifts for the City of Midland Garage.
TOTAL $169,790.00

NOTICE TO BIDDERS:

1. FAILURE TO RESPOND WITH EITHER A BID OR "NO BID" WILL SUBJECT YOUR FIRM TO REMOVAL FROM THE BID LIST FOR THIS TYPE OF MATERIAL, EQUIPMENT OR SUPPLY ITEM.
2. IF THE SELECTED BIDDER/CONTRACTOR CANNOT MEET THE REQUIREMENTS OF CONTRACT, THEN THE CITY RESERVES THE RIGHT TO AWARD THIS PURCHASE TO ANOTHER BIDDER.
3. IMPORTANT NOTICE: IF THE CONTRACT DOCUMENTS REQUIRE WORKER'S COMPENSATION INSURANCE, BIDDER/CONTRACTOR MUST CARRY WORKER'S COMPENSATION INSURANCE TO BE ELIGIBLE FOR THIS CONTRACT. IF YOU CANNOT PROVIDE WORKER'S COMPENSATION INSURANCE AS REQUIRED BY STATE OF TEXAS STATUTE, WE RESPECTFULLY REQUEST THAT YOU "NO BID" THIS WORK.
4. BIDDER/CONTRACTOR/COMPANY IS RESPONSIBLE FOR ACQUIRING AND ACKNOWLEDGING ALL ADDENDA.
5. **PUBLIC INFORMATION:** To the extent that Bidder is submitting a bid for a contract described by Section 552.371 of the Texas Government Code, Bidder agrees as follows in accordance with Section 552.372(b) of the Texas Government Code: The requirements of Subchapter J, Chapter 552, Government Code, may apply to this bid, and the contractor or vendor agrees that the contract can be terminated if the contractor or vendor knowingly or intentionally fails to comply with a requirement of that subchapter

FOR ADDITIONAL INFORMATION, CONTACT (432) 685-7234 OR EMAIL PURCHASING@MIDLANDTEXAS.GOV

NOTE: EACH BIDDER IS TO INDICATE BRAND NAME PRODUCT NUMBER AND ATTACH DESCRIPTIVE LITERATURE CLEARLY MARKED TO SHOW EACH ITEM ON THIS BID.THE UNDERSIGNED HEREBY OFFERS TO FURNISH AND DELIVER THE ARTICLES OR SERVICE AS SPECIFIED ABOVE AT THE PRICES AND TERMS HEREIN STATED AND IN STRICT ACCORDANCE WITH THE SPECIFICATIONS AND CONDITIONS OF BIDDING ALL WHICH ARE MADE A PART OF THIS OFFER. THIS OFFER IS NOT SUBJECT TO WITHDRAWAL WITHOUT PERMISSION.

COMPANY NAME: DRUID COWAN EQUIPMENT
ADDRESS: 3601 NFM 1936
CITY: ODESSA STATE: TX ZIP 79764
PHONE NO: 432-238-6446 EMAIL: dcowan05@YAHOO.COM
DELIVERY CAN BE MADE: FACTORY 5 DAYS 20 DAYS REALITY 30-45 DAYS
AUTHORIZED SIGNATURE: Druid Cowan

THE CITY OF MIDLAND

SPECIFICATION

4 Rotary inground lifts
1 Rotary 4 post lift

1. VENDOR CONTACT:

All potential vendors shall direct ALL questions, areas for bid clarification and specification verification to the Purchasing Agent IN WRITING, via mail or fax as follows:

The City Of Midland
Office of the Purchasing Agent
P.O. Box 1152
Midland, TX 79702

OR

FAX: (432) 685-0523

Email: purchasing@midlandtexas.gov

All vendors on the bid list will then be notified of the questions and presented an answer. Information provided by other City of Midland, TX personnel shall not be considered binding.

2. DEFINITIONS

2.1. OWNER

City of Midland

2.2. CONTRACTOR

Successful Bidder

3. REQUIREMENTS

Vendor shall comment in the right margin as to whether or not his bid meets or exceeds the minimum specification shown. Please explain how it exceeds or falls short of the requirement. Use blue or Black ink if completed by hand or typewriter. A separate sheet may be used as long as each item is identified and the sheet(s) are signed.

	Requirement	**Vendor Comment**
3.1.	**GENERAL**	
3.1.1.	The intent of this specification is to establish minimum standards for equipment to be purchased by City of Midland, Texas. This specification is intended to describe a new production model. The design is to be such that no additional modification or fabrication is required.	
3.1.2.	The City of Midland reserves the right to reject any or all bids and to waive all formalities and to award the purchase to the bidder on all or none basis.	
3.1.3.	The City of Midland reserves the right to award the bid based on what we determine to be the most advantageous offer to the City of Midland.	

3.1.4. The City of Midland reserves the right to increase or decrease quantities during the current budget year without penalty.

3.1.5. All specifications are minimum unless otherwise stated.

4 ROTARY IN GROUND LIFTS

3.2. SPECIFICATIONS REQUESTED MODEL LISTED IS ROTARY SL212W CONVENTIONAL CONTROL

3.2.1.	**Adapters for trucks**	yes
3.2.1.1.	**Rise 76 3/8 – 83 7/8**	yes
3.2.2.	**Width overall 98 ½"**	yes
3.2.2.1.	Drive thru clearance 88"	yes
3.2.2.2.	**Min reach 31 ½ "**	yes
3.2.2.3.	**Max reach 48"**	yes
3.2.3.	Reach (overall arm min) 77"	yes
3.2.4.	**Reach (overall arm max) 110"**	yes
3.2.5.	Min. adapter height 5 3/8"	yes
3.2.6.	**High step height 7 7/8"**	yes
3.2.6.1.	**Lifting capacity overall 12,000 lbs.**	yes
3.2.6.2.	Lifting capacity (per arm) 3,000 lbs.	yes
3.2.6.3.	Guide plunger diameter 8 ½"	yes
3.2.6.4.	**Voltage single phase 208v-230v**	yes
3.2.7.	**Time of full rise/ decent 57 seconds.**	yes
3.2.7.1.	**1 Four Post Lift**	
3.2.8.	Specifications ROTARY MODEL SM18EL	
Max. Wheelbase 230"		
Rise 68"		yes
Length overall 25' 11 3/16"		yes
Width overall 11' 5 ¾"		yes
3.2.8.1.	Inside of columns 121 ½"	yes
3.2.9.	**Between columns 248"**	yes
3.2.10.	**Height of columns 6' 5 ¾"**	yes
3.2.11.	Width of runways 22"	yes
3.2.12.	**Height of runways 7 ½"**	yes
3.2.12.1.	Width between runways (max) 46"	yes

3.2.12.2. Lifting capacity 18,000 lbs — Yes

3.2.12.3. Motor 2 HP — Yes

3.2.13. Voltage single phase 208v-230v

3.2.13.1. Time of full rise 100 seconds — Yes

3.2.13.2. Rolling jacks for 4 post lift with rail engaging wheel assembly — Yes

3.2.13.3. **Adjustable for an inside runway min width of 40 ¾" to max of 49 ¼"** — Yes

3.2.13.4. **Special Conditions**

3.2.13.5. The successful bidder shall include two (2) copies of illustrative and technical data covering equipment proposed. — ENCLOSED

3.2.13.6. The successful bidder will be responsible for the removal and disposal of all used equipment that is being replaced. — Yes

A pre-bid conference will be held at 9:00 A.M. on Wednesday of the week preceding bid opening. The meeting shall be held at 1701 East Orchard, in building 6, Fleet Services, Conference Room. The purpose is to answer any questions and discuss the projects listed on this bid document, and to enable bidders to have a good understanding of the work to be done and materials required.

3.3. PLEASE CONTACT MR. ELOY SALINAS AT (432) 685-7451 OF YOUR INTEREST IN THIS PROJECT AND YOUR INTENT TO ATTEND THE MEETING. IF THERE IS NO INTEREST, THERE WILL NOT BE A MEETING.

3.3.1. All equipment must meet all Federal, State and local standards and/or laws including but not limited to ANSI, OSHA, ICC, DOT, NFPA, UL and MVI requirements pertaining thereto.

3.3.2.

3.3.3. Entire equipment and/or installation are to encompass first class workmanship and attention to details. For instance, all slag shall be removed, all burrs ground off, all drain plugs easily accessible, or drain lines installed. These comments are not all inclusive, but used for illustration only. All materials shall be new unless either it is specified to use used materials or previously approved in writing by the City of Midland.

3.3.4. Any inadvertent omissions from the specifications shall not relieve the successful bidder from the responsibility of furnishing an operational unit complete with all necessary components, accessories, controls and technical advice for an efficient, safe operation, performing its' intended function.

3.3.5. Exceptions for minor deviations from written specifications shall not disqualify a bidder. The City of Midland shall determine what constitutes as a minor deviation.

3.3.5.1. **If no exceptions have been taken, it is presumed the offer meets specification. If the written offer meets specification and the equipment does not meet specification, the vendor will be required to make the correction whenever the discrepancy is discovered, regardless of age or hours/miles.**

3.3.5.2. **The delivery address is; City of Midland**
Fleet Services
1701 E. Orchard Lane Bldg. 6
Midland, Texas 79701

3.3.6. A minimum of 24 hours advance notice shall be given to the Fleet Services Garage Superintendent prior to delivery of any equipment. (432) 685-7455.

3.3.6.1. **The bidder is to furnish names, addresses, telephone numbers and the name of a knowledgeable person to contact for at least five (5) customer references the bidder has furnished like equipment to over the previous 12 to 24 months. This requirement is waived if the bidder has provided similar goods or services to the City of Midland.**

3.3.7. New, unused and standard production equipment and components must be furnished. The City of Midland will not accept prototypes or experimental models.

3.3.8.

3.3.9. All transactions concerning this bid (excluding an original invoice) must be documented on shipping orders or letter of transmittal and coordinated through the Fleet Services Garage Superintendent. (432) 685-7451

3.3.10. In order for your bid to be considered, and eliminate the possibility of technical disqualification, be sure the following has been done.

_____ Make sure you have all pages of specifications

_____ Be sure you return the specifications

3.3.11. _____ Be sure you include bid

3.3.12. I hereby certify that the item I proposed to furnish on this invitation to bid meets or exceeds the specifications and intent pertaining thereto, and that the instructions to bidders have been read and conformed to. Deviations from these requirements will be corrected at vendors expense whenever discovered.

3.3.13. Failure to comply with your offer may result in a suspension of the City of Midland accepting your bids.

4. BID WAIVERS:

A. Waiver of Attorney Fees: By submitting a bid, **EACH BIDDER AGREES TO WAIVE AND DOES HEREBY WAIVE ANY CLAIM THE BIDDER HAS OR MAY HAVE AGAINST THE CITY OF MIDLAND, TEXAS, AND THE CITY'S RESPECTIVE EMPLOYEES AND REPRESENTATIVES FOR THE AWARD OF ATTORNEY'S FEES, ARISING OUT OF OR IN CONNECTION WITH THE ADMINISTRATION, EVALUATION, OR RECOMMENDATION OF ANY BID; WAIVER OF ANY REQUIREMENTS UNDER THE BID DOCUMENTS; OR THE CONTRACT DOCUMENTS; ACCEPTANCE OR REJECTION OF ANY BIDS; AND AWARD OF THE CONTRACT. BY**

SUBMITTING A BID, THE BIDDER SPECIFICALLY WAIVE ANY RIGHT TO RECOVER OR BE PAID ATTORNEY'S FEES FROM THE CITY OF MIDLAND, TEXAS, OR ANY OF THE CITY'S EMPLOYEES AND REPRESENTATIVE'S UNDER ANY PROVISIONS OF THE PROVISIONS OF THE TEXAS UNIFORM DECLARATORY JUDGEMENTS ACT (TEXAS CIVIL PRACTICE AND REMEDIES CODE, SECTION 37.001 ET. SEQ., AS AMENDED).

The bidder agrees that this is the intentional relinquishment of a presently existing known right.

By Execution and submission of this bid, the bidder hereby represents and warrants to the City of Midland that the bidder has read and understands the Bid Documents and the Contract Documents and this bid is made in accordance with the Bid Documents. Bidder acknowledges that it understands all terms within the bid Documents which include the waiver provisions, and that it had the right to consult with counsel regarding all of the above documents.

B. WAIVER:
By submitting a bid, **EACH BIDDER AGREES TO AND DOES HEREBY WAIVE ANY CLAIM THE BIDDER HAS OR MAY HAVE AGAINST THE CITY OF MIDLAND, TEXAS AND THE CITY'S EMPLOYEES, AGENTS AND OFFICERS, ARISING OUT OF OR IN ANY WAY CONNECTED WITH THE FOLLOWING:**

1. **THE ADMINISTRATION, EVALUATION OR RECOMMENDATION OF ANY BID;**
2. **WAIVER OR DELETION OF ANY OF THE REQUIREMENTS UNDER THE BID DOCUMENTS OR THE CONTRACT DOCUMENTS;**
3. **ACCEPTANCE OR REJECTION OF ANY BIDS; AND**
4. **AWARD OF THE CONTRACT.**

By submitting the bid, the bidder acknowledges that the bidder understands all of the terms of the bidding documents and consents to the bidding process and the possibility of a negative assessment.

By submitting a bid, the bidder acknowledges and agrees that there was and is no disparity of bargaining power between the bidder and the City of Midland, Texas.

The bidder agrees that this is the intentional relinquishment of the above listed rights.

By Signing Request for bid and/ or below, your company agrees to the above waiver(s). If this form is not signed and included with your bid documents your bid will be considered non-responsive and will be rejected.

DAVID COWAN EQUIPMENT
Company Name

432-238-6446
Phone

Authorized Signature

N/A
Fax

DAVID COWAN
Print Above Name

8-26-2024
Date

A Message for Our Vendors

The City of Midland, Texas has developed a strategic plan with long-term objectives, new mission and vision statements, and a course of action to carry out goals established by and for our community. This includes strategic priorities that will address our economy, infrastructure, quality of life, standards for a safe and secure city, plus much more that's detailed below. We hope you join us on this exciting journey and to be part of the energy toward a successful and prosperous Midland!

Vision Statement

The City of Midland will be the premier and safest city in West Texas by providing world-class municipal services through operational excellence and a culture of innovation.

Mission Statement

Deliver exceptional services and promote a high quality of life and place for ALL our citizens.

Guiding Principles: I-FORCE

Integrity
Financial Stewardship
Outstanding Service
Respect
Collaboration
Excellence

City Council Key Focus Areas

Communication • Customer Service
Economic Development
Fiscal Responsibility & Accountability
High-Performing City Team • Legislation
Quality of Place • Technology Improvements

Core Values

Commitment: Duty to the public good.
Engagement: Foster partnerships and collaboration.
Excellence: Practice continuous improvement.
Innovation: Embrace creativity and cutting-edge solutions.
Integrity: Operate with transparency and accountability.
Inclusivity: Ensure all voices are heard and valued.

Strategic Goals

1. **Strong Economy with More Quality Jobs**
   - 1.1 Increase the Midland Sales Tax Base: Develop strategies to expand the tax base by attracting businesses and supporting local commerce.
   - 1.2 Enhance Visitor Revenue Opportunities: Boost tourism through marketing and infrastructure improvements.
   - 1.3 Continue Downtown and West Midland Redevelopment: Promote revitalization efforts for a vibrant downtown.
   - 1.4 Nurture Development Districts: Establish key action plans honed to enhance Development Districts.
   - 1.5 Grow the Core Business of Air Transportation: Develop and transform the Midland airport system.
   - 1.6 Diversify Midland's Economy: Support initiatives that diversify the local economy and enhance resilience.
   - 1.7 Expand Opportunities and Programming for General and Small Business: Foster the growth, retention, and expansion of local small businesses as well as business in general.
   - 1.8 Improve Speed to Market for Citizens, Builders, Developers, and Contractors: Reduce wait times for permit review/approval and inspection process of permitted work.
   - 1.9 Establish Our Community as a Premier Destination for Retail and Entertainment: Offer unique and compelling experiences that draw visitors, ultimately driving economic growth and community vibrancy while increasing tourism and business development.

2. **Set the Standard for a safe and secure City**
   2.1 Enhance public safety programs.
   2.2 Improve Pedestrian and Motorist Safety: Invest in traffic management and infrastructure.
   2.3 Implement Effective Code Enforcement Strategies: Address nuisances to improve overall health and safety.
   2.4 Revitalize Neighborhoods: Utilize best practices to support the redevelopment of neighborhoods.
   2.5 Enhance Animal Services: Ensure the welfare of pets and wildlife in the city.
   2.6 Grow and Retain Public Safety Resources: Expand law enforcement presence as well as fire reduction and prevention programs while reducing attrition.
3. **Quality of Life and Place**
   3.1 Enhance Community Engagement: Champion innovative recreational, educational, and cultural programs that enrich residents' lives in partnership with the business community.
   3.2 Foster Relationships with Foundations and Outside Businesses: Collaborate to create world-class facilities and amenities.
   3.3 Create an Attractive and Inclusive Living Environment: Develop and enhance live, work, and play opportunities for our citizens.
   3.4 Establish Beautification Programs: Implement initiatives to make the community clean and bright.
   3.5 Nurture and Promote a Healthy Community: Increase healthy community living and education opportunities for citizens of all ages.
   3.6 Build the Best Parks System in Our Region: Offer diverse, accessible, and enjoyable green spaces, tournament-ready ball fields, safe playgrounds, and unique recreational opportunities that enhance the quality of life/quality of place for our community.
4. **Transparent and Consistent Communication**
   4.1 Set a Climate of Respect, Collaboration, and Team Spirit: Cultivate a culture of openness and respect.
   4.2 Enhance Communication Efficiency and Effectiveness: Leverage and expand the use of technology to facilitate the exchange of information.
   4.3 Elevate Internal Communication and Employee Engagement: Strengthen information flow and collaboration among city staff.
   4.4 Advance Two-Way Communication of Key Messages: Engage effectively with external stakeholders; foster community engagement.
   4.5 Strengthen Messaging Opportunities Through Various Media Outlets: Communicate the city's achievements and initiatives.
5. **Provide Sound Governance and Fiscal Management**
   5.1 Recruit and Retain a Skilled and Diverse Workforce: Invest in talent and diversity; grow our local pipeline of skilled employees.
   5.2 Enhance Citizen Experience: Improve employee working conditions to better serve citizens.
   5.3 Hone Public Servant Proficiency: Cultivate a culture of professional growth, skilled mastery, and information exchange.
   5.4 Implement Cutting-Edge Practices: Harness automation and Artificial Intelligence technology for efficient resource utilization.
   5.5 Promote a Well-Balanced Customer Service Philosophy: Consistently deliver excellent service to residents.
   5.6 Deliver Services Timely and Efficiently: Prioritize continuous improvement.
   5.7 Ensure Continued Financial Stability and Accountability: Maintain financial transparency.
   5.8 Deliver Effective and Efficient Processes: Maximize value in procurement.
   5.9 Ensure Reliability and Safety: Maintain existing assets and develop new city asset opportunities, including parks and other facilities, with a standard of excellence.
   5.10 Create a Work Environment that Supports Bleeding-Edge Practices: Encourage bleeding-edge practice that then cultivates an environment where employees can learn from their experiences and improve processes; thus, becoming a learning organization.
6. **Strengthen and Sustain Our Infrastructure**
   6.1 Provide Reliable and Sustainable Utilities: Guarantee water supply and distribution systems security and longevity.
   6.2 Enhance Infrastructure for Economic Growth: Improve competitiveness through infrastructure investments that includes collaboration with neighboring jurisdictions and exemplary peer agencies.
   6.3 Streamline and Consolidate City Facilities: Create synergy for improved services.
   6.4Standardize Infrastructure Processes Across the City: Ensure consistency, timeliness, and accountability in infrastructure development.
   6.5 Implement a Funding Stream for Infrastructure: Establish reliable funding for continual improvements.
   6.6 Strategize for and Monitor City Growth: Develop proactive responses to growth rather than reactive.
   6.7 Develop and Implement Comprehensive Road Planning and Maintenance Initiatives: Ensure safe and maintained roads for existing and new developing areas and main thoroughfares.

Rotary®



WIDE SMARTLIFT®

INGROUND LIFT

10,000 lbs. & 12,000 lbs. CAPACITIES



Be ready to service the next generation of vehicles with a lift designed to service battery electric, exotic, and standard vehicles.

THE FUTURE LOOKS WIDE



Future proof your business with Rotary's most versatile lift yet.

The WIDE SMARTLIFT® inground lift combines a wide stance with versatile features only Rotary can offer. It's specifically designed to service electric vehicles, exotics and even standard vehicles. Available in 10,000 lbs. and 12,000 lbs. capacities.

Get 1.5X the space and 2X the lifting speed.

2 **18%** greater reach for faster, easier spotting with TRIO™ three-stage arms

1 **48%** MORE UNDER CAR CLEARANCE
88" of unobstructed space for easy service of air dams, batteries and more.

2 INTERCHANGEABLE ADAPTER OPTIONS to service cars, trucks or EVs on the same arm.

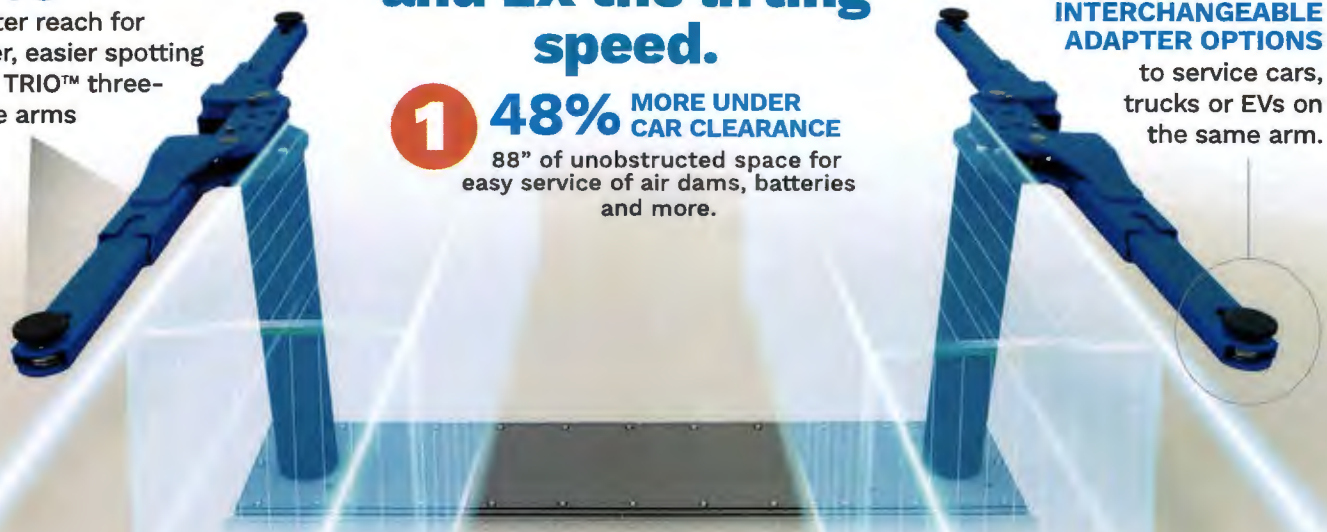

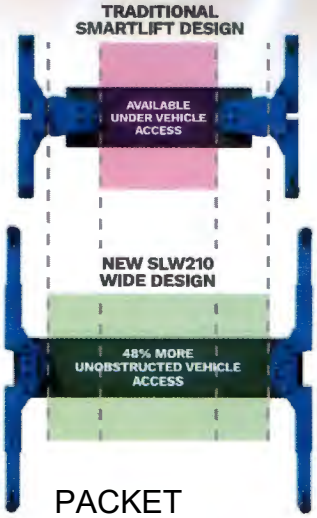

1 **TECHNICIAN PRODUCTIVITY**
Obstruction-free design provides the needed 360° movement around vehicles with open access above and below the vehicle.

3 **SHOCKWAVE™ TECHNOLOGY**
Accelerate service numbers with 2X the lifting speed compared to standard lifts.

SHOCK WAVE EQUIPPED

Rotary

SMARTER LIFTING... FOR YOUR BUSINESS

2 Discover the Versatility of Patented TRIO™ Arms

Standard TRIO™ two-piece, three-stage arms allow quick positioning of the adapter to the vehicle pickup point with no need to move heavy two or three stage inner arms. Interchangeable with three vehicle adapter options.

3 Supercharge with SHOCKWAVE™ TECHNOLOGY

SHOCKWAVE-equipped lifts are the fast! Every industry exclusive SHOCKWAVE-equipped lift includes:

- 2X faster rise and descent
- Patented 110v DC power system with built-in battery charger
- Spotline™ laser-assisted spotting with motion sensor

LEARN ABOUT THE BENEFITS OF SHOCKWAVE LIFTS



ENVIRONMENTALLY-FRIENDLY

PROUDLY MADE IN MADISON, INDIANA

Why SMARTLIFT?

From every angle, we've designed the SmartLift® to help you get the most from your service facility.

WATCH AND LEARN ABOUT THE SMARTLIFT ADVANTAGE

Technicians Are More Productive:

Rotary inground lifts provide 360° movement around the vehicle and unobstructed access above and below the vehicle. Repairs can be performed without danger of damaging the vehicle on lift columns or overheads.

Proven SMARTLIFT Technology: Required Routine Service is Faster and Less Expensive*

- Patented Easy Access™ cylinders allow all routine cylinder maintenance to be done at floor level with no forklifts. **Reduce downtime by 75%** and preserve bay revenue with lower service repair costs.
- Exclusive Smartguard® plungers for time tested durability and performance.
- Corrosion resistant locking system features a patent polymer and stainless air cylinder for high performance and longevity of lift operation.

Environmental Responsibility

Smartlifts are fully contained in a recycled, single-piece polymer composite housing - oil leakage and spillage are a thing of the past. **There are no EPA concerns with this inground lift.**

Easier, Faster Installation

Smartlifts are preassembled and install quickly in a new or existing facility with minimal excavation. Smartlifts require less materials versus other wide stance lifts that need multiple pours, more assembly and longer time to complete installation. **Save up to 35% in installation costs.***

More Up Time, Less Lost Revenue

No other lift brand rigorously life cycle tests its equipment to the same standards as Rotary. Testing validates components, minimizes lift failures and maximizes working time in the bay - matching years of reliable service.

*WHEN COMPARED TO COMPETITIVE DESIGNS

SMARTLIFT® WIDE
INGROUND LIFT MODELS

10,000 LBS. CAPACITY LIFTS
Three lift models with 3 adapter options

SLW210-RA
RA Round Polymer Adapters

SLW210-TA
TA Frame-Engaging Truck Adapter

12,000 LBS. CAPACITY LIFTS
Light and medium duty trucks

SLW212-TA
TA Frame-Engaging Truck Adapter

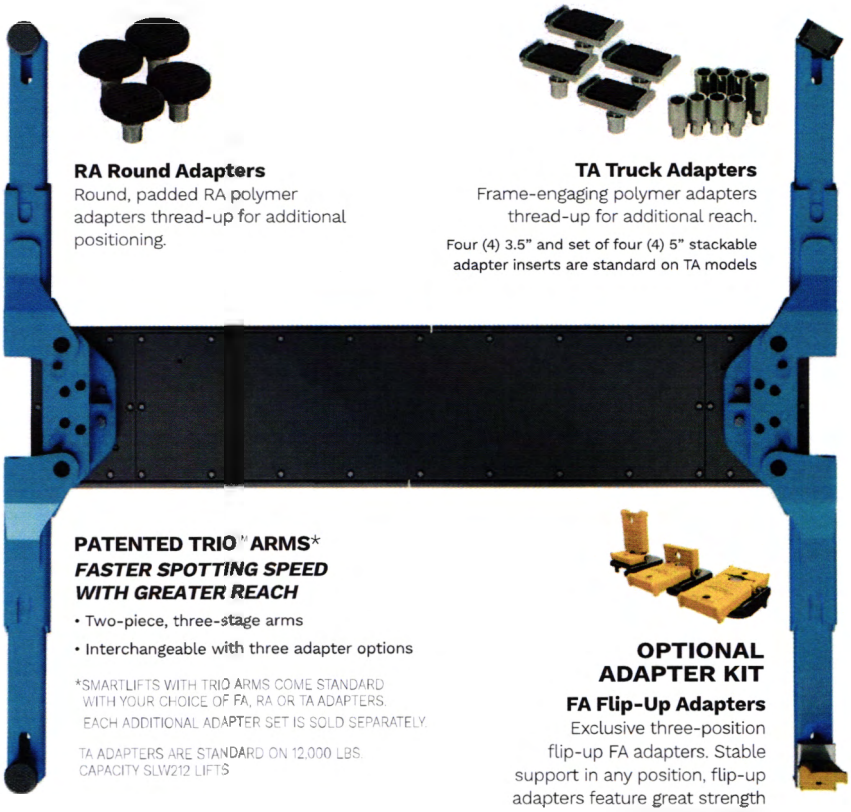

RA Round Adapters
Round, padded RA polymer adapters thread-up for additional positioning.

TA Truck Adapters
Frame-engaging polymer adapters thread-up for additional reach.

Four (4) 3.5" and set of four (4) 5" stackable adapter inserts are standard on TA models

PATENTED TRIO® ARMS*
FASTER SPOTTING SPEED WITH GREATER REACH

- Two-piece, three-stage arms
- Interchangeable with three adapter options

*SMARTLIFTS WITH TRIO ARMS COME STANDARD WITH YOUR CHOICE OF FA, RA OR TA ADAPTERS. EACH ADDITIONAL ADAPTER SET IS SOLD SEPARATELY.

TA ADAPTERS ARE STANDARD ON 12,000 LBS. CAPACITY SLW212 LIFTS

OPTIONAL ADAPTER KIT

FA Flip-Up Adapters
Exclusive three-position flip-up FA adapters. Stable support in any position, flip-up adapters feature great strength in a simple design.

SPECIFICATIONS

SMARTLIFT MODELS Standard Colors are Blue, Red, Black	SLW210-RA THREE-STAGE TRIO ARMS Round Adapters (RA)	SLW210-TA THREE-STAGE TRIO ARMS Truck Adapters (TA)	SLW212-TA THREE-STAGE TRIO ARMS Truck Adapters (TA)
STANDARD	**SLW210iN0G0**	**SLW210iN0T0**	**SLW212iN0T0**
SHOCKWAVE EQUIPPED	**SLW210U0G0**	**SLW210U0T0**	**SLW212U0T0**
Lift Capacity Capacity per Arm	10,000 lbs. 2,500 lbs.		12,000 lbs. 3,000 lbs.
Rise*/ 71" cylinder stroke	75-3/16" to 76-3/8"	75-1/4" to 76-7/16"	75-9/16" to 76-3/4"
Overall Width	119-5/8"		
Drive-Thru Clearance	88-1/16"		
Minumum Arm Reach	19-11/16"	19-11/16"	21-7/16"
Maximum Arm Reach	44-1/2"	44 -1/2"	47"
Min. Adapter Height from Floor	4-1/4"	4-7/8"	4-7/8"
Ceiling Height Minimum	Required ceiling height equals rise with tallest adapter extensions plus height of vehicle		
Voltage Single Phase	208-230V / **110V with SHOCKWAVE**		
Electrical Usage Ø	.01kWh per cycle		
Guide Plunger Diameter	8-1/2"		
Time of Full Rise / Descent **With SHOCKWAVE****	53 seconds / 24 seconds **25 seconds / 19 seconds**		

* Rise measures lowest and highest position of the supplied adapters from floor to full cylinder stroke.
** Actual rise and descent times vary depending on vehicle weight. Lift colors come standard with your choice of red or blue.

2700 Lanier Drive
Madison, IN 47250, USA

rotarylift.com

Sales: 800.445.5438
insidesales@vsgdover.com

Tech. Support: 800.445.5438
technicalsupport@rotarylift.com

Government Sales: 800.445.5438 X5655
rotarylift.com/Government-Purchasing-Assistance/

L # **Rotary SLW210/12 Cutsheet.2022.04**

©2022 VEHICLE SERVICE GROUP, LLC. Printed in USA. All Rights Reserved. Unless otherwise indicated, ROTARY, VEHICLE SERVICE GROUP, DOVER and all other trademarks are property of Dover Corporation and its affiliates.

Product specifications, part numbers, images and component descriptions are subject to change without notice or liability.

EXHIBIT C

Bonding Requirements

The successful bidder shall be required to furnish a Performance & Payment Bond* for bids in excess of $50,000.00, in an amount equal to one hundred percent (100%) of the total contract price, such bond to be executed in five (5) original counterparts by a Corporate Surety authorized to do business in the State of Texas and acceptable to the City of Midland. All bonds must be executed on forms contained in these contract documents. The form of agreement which the successful bidder, as contractor, will be required to execute is also included herewith. The form of agreement and the form of the bonds should be carefully examined by the bidder.

A certified check, cashier's check, bank money order, or irrevocable letter of credit issued by a bank satisfactory to the City, or a bidder's bond on the form provided, in the amount of five percent (5%) of the largest possible lump sum bid submitted, payable without recourse to the City, must accompany the bidder's proposal, as a guaranty that the bidder will enter a contract and execute the required payment bond and guaranty in the forms provided within fifteen (15) days after notice of award of contract to him. Bids or proposals without the required bid guaranty will not be considered. All bid sureties and payment bonds shall name the City of Midland as Obligee.

*A cash security such as a cashier's check or irrevocable letter of credit issued by a bank satisfactory to the City for 100 % of the contract amount may be supplied in lieu of the Performance and Payment Bonds. The check will be returned un-cashed upon satisfactory completion of the work and evidence of payment of all obligations due for the contract.

PAYMENT BOND

THE STATE OF TEXAS §

COUNTY OF MIDLAND § SURETY NO _____

KNOW ALL MEN BY THESE PRESENTS, THAT _____ of the City of _____ of the County of _____ and State of Texas as Principal, and _____, as Surety, are held and firmly bound unto the City of Midland, Texas, as Obligee, in the amount of _____ DOLLARS ($ _____) for the payment whereof the said Principal and Surety bind themselves, their heirs, administrators, executors, successors and assigns, jointly and severally, firmly by these presents.

WHEREAS, the Principal has entered into a certain written contract with the Obligee, dated the _____ day of _____, 20__, for the furnishing of materials, equipment to perform all labor and work necessary for _____, hereof as fully and to the same extent as if copied at length herein.

NOW, THEREFORE, the condition of the obligation is that if the said Principal shall pay all claimants supplying labor and material to him or a subcontractor in the prosecution of the work provided for in said contract, then this obligation shall be null and void; otherwise, it is to remain in full force and effect.

Surety, for value received, stipulates and agrees that no change, extension of time alteration or addition to the terms of the contract, or to the work performed there under, or the plans, specifications of drawings accompanying the same, or any assignment of the contract as may be provided for in the instructions to bidders, shall in anywise affect its obligation on this Bond, and it does waive notice of any such change, extension of

time, alteration or addition to the terms of the contract, assignment thereof, or to the work to be performed there under.

IN WITNESS WHEREOF the said Principal and Surety have signed and sealed this instrument, this _____ day of _____ , 20___ .

_____	_____
Principal	Surety
By _____	By _____
Address _____	Address _____
_____	_____
_____	_____

APPROVED AS TO FORM:

_____

City Attorney

NOTE: Attach Power of Attorney

Form Revised August 2012

PERFORMANCE BOND

THE STATE OF TEXAS §

COUNTY OF MIDLAND § SURETY NO _____

KNOW ALL MEN BY THESE PRESENTS, THAT _____ (Hereinafter called the Principal[s]), as Principal(s), and _____ (Hereinafter called the Surety), as Surety, are held and firmly bound unto the City of Midland, Texas a home rule municipal corporation of Midland County, Texas, (hereinafter called the Obligee), in the amount of _____ DOLLARS ($ _____) for the payment whereof the said Principal and surety bind themselves, and their heirs, administrators, executors, successors and assigns, jointly and severally, firmly by these presents.

WHEREAS, the Principal has entered into a certain written contract with the Obligee, dated the _____day of _____ , 20___ , for the furnishing of materials and equipment to perform all labor and work necessary for the construction of _____ , specifically including in the scope of this work and bond, the additional maintenance guaranty provisions set forth in the contract conditions, which contract is hereby referred to and made a part hereof as fully and to the same extent as if copies at length herein, as well as the Principal's primary obligation to perform according to plans and specifications.

NOW, THEREFORE, THE CONDITION OF THIS OBLIGATION IS SUCH, that if the said Principal shall faithfully perform the work in accordance with the plans, specifications, instructions to bidder, general and special conditions and other contract documents, including any addendum thereto, then this obligation shall be void; otherwise to remain in full force and effect.

PROVIDED further that if any legal action be filed upon this Bond venue shall lie in Midland County, State of Texas.

Surety, for value received, stipulates and agrees that no change, extension of time, alteration or addition to the terms of the contract, or to the work performed thereunder, or the plans, specifications or drawings accompanying the same, or any assignment of the contract as may be provided for in the instructions to bidders, shall in anywise affect its obligation on this Bond, and it does waive notice of any such change, extension of time, alteration or addition to the terms of the contract, assignment thereof, or the work to be performed thereunder.

IN WITNESS WHEREOF, the said Principal and surety do sign and seal this instrument, this _____ day of _____ , 20___.

_____	_____
Principal	Surety
By _____	By _____
Address _____	Address _____
_____	_____
_____	_____

APPROVED AS TO FORM:

_____

City Attorney

NOTE: Attach Power of Attorney

IMPORTANT NOTICE

Conflict Of Interest Reporting Requirements

Compliance with LOCAL GOVERNMENT CODE TITLE 5. MATTERS AFFECTING PUBLIC OFFICERS AND EMPLOYEES SUBTITLE C. MATTERS AFFECTING PUBLIC OFFICERS AND EMPLOYEES OF MORE THAN ONE TYPE OF LOCAL GOVERNMENT CHAPTER 176. DISCLOSURE OF CERTAIN RELATIONSHIPS WITH LOCAL GOVERNMENT OFFICERS; PROVIDING PUBLIC ACCESS TO CERTAIN INFORMATION.

Form CIQ: This questionnaire reflects changes made to the law by H.B. 23, 84th Leg., Regular Session. This questionnaire shall be filed in accordance with Chapter 176, Local Government Code, by a vendor who has a business relationship as defined by Section 176.001(1-a) with a local governmental entity and the vendor meets requirements under Section 176.006(a). By law this questionnaire must be filed with the records administrator of the local governmental entity not later than the 7th business day after the date the vendor becomes aware of facts that require the statement to be filed. See Section 176.006(a-1), Local Government Code. A vendor commits an offense if the vendor knowingly violates Section 176.006, Local Government Code. An offense under this section is a misdemeanor.

Bidders are responsible for filing Conflict of Interest form "CIQ" in accordance with the above referenced statute. Failure to do so is a class C Misdemeanor. Contracts or Purchase Orders awarded to a vendor that has violated this law is subject to termination at such time that the violation is discovered with no recourse to the City of Midland. The bidder will be subsequently removed from the bidders list for a minimum of one year.

When there is no known conflict of interest as defined by the statute, it is not necessary to file/submit the Form CIQ. The form must be submitted if a conflict is subsequently discovered.

By submitting a response to this request, vendor represents that it complies with the requirements of Chapter 176 of the Texas Local Government Code.

For a current list of the local government officers go to: http://www.midlandtexas.gov/

Upon completion of the form, sign and submit with bid or mail to:

City of Midland
Attn: City Secretary
PO Box 1152
Midland, Texas 79702

CONFLICT OF INTEREST QUESTIONNAIRE

FORM CIQ

For vendor doing business with local governmental entity

This questionnaire reflects changes made to the law by H.B. 23, 84th Leg., Regular Session.

This questionnaire is being filed in accordance with Chapter 176, Local Government Code, by a vendor who has a business relationship as defined by Section 176.001(1-a) with a local governmental entity and the vendor meets requirements under Section 176.006(a).

By law this questionnaire must be filed with the records administrator of the local governmental entity not later than the 7th business day after the date the vendor becomes aware of facts that require the statement to be filed. *See* Section 176.006(a-1), Local Government Code.

A vendor commits an offense if the vendor knowingly violates Section 176.006, Local Government Code. An offense under this section is a misdemeanor.

OFFICE USE ONLY

Date Received

1 **Name of vendor who has a business relationship with local governmental entity.**

2 ☐ **Check this box if you are filing an update to a previously filed questionnaire.** (The law requires that you file an updated completed questionnaire with the appropriate filing authority not later than the 7th business day after the date on which you became aware that the originally filed questionnaire was incomplete or inaccurate.)

3 **Name of local government officer about whom the information is being disclosed.**

_____

Name of Officer

4 **Describe each employment or other business relationship with the local government officer, or a family member of the officer, as described by Section 176.003(a)(2)(A). Also describe any family relationship with the local government officer. Complete subparts A and B for each employment or business relationship described. Attach additional pages to this Form CIQ as necessary.**

A. Is the local government officer or a family member of the officer receiving or likely to receive taxable income, other than investment income, from the vendor?

☐ Yes ☐ No

B. Is the vendor receiving or likely to receive taxable income, other than investment income, from or at the direction of the local government officer or a family member of the officer AND the taxable income is not received from the local governmental entity?

☐ Yes ☐ No

5 **Describe each employment or business relationship that the vendor named in Section 1 maintains with a corporation or other business entity with respect to which the local government officer serves as an officer or director, or holds an ownership interest of one percent or more.**

6 ☐ Check this box if the vendor has given the local government officer or a family member of the officer one or more gifts as described in Section 176.003(a)(2)(B), excluding gifts described in Section 176.003(a-1).

7 _____ _____

Signature of vendor doing business with the governmental entity Date

PACKET 9-41 September 24, 2024

CONFLICT OF INTEREST QUESTIONNAIRE
For vendor doing business with local governmental entity

A complete copy of Chapter 176 of the Local Government Code may be found at http://www.statutes.legis.state.tx.us/Docs/LG/htm/LG.176.htm. For easy reference, below are some of the sections cited on this form.

Local Government Code § 176.001(1-a): "Business relationship" means a connection between two or more parties based on commercial activity of one of the parties. The term does not include a connection based on:

(A) a transaction that is subject to rate or fee regulation by a federal, state, or local governmental entity or an agency of a federal, state, or local governmental entity;

(B) a transaction conducted at a price and subject to terms available to the public; or

(C) a purchase or lease of goods or services from a person that is chartered by a state or federal agency and that is subject to regular examination by, and reporting to, that agency.

Local Government Code § 176.003(a)(2)(A) and (B):

(a) A local government officer shall file a conflicts disclosure statement with respect to a vendor if:

***

(2) the vendor:

(A) has an employment or other business relationship with the local government officer or a family member of the officer that results in the officer or family member receiving taxable income, other than investment income, that exceeds $2,500 during the 12-month period preceding the date that the officer becomes aware that

(i) a contract between the local governmental entity and vendor has been executed; or

(ii) the local governmental entity is considering entering into a contract with the vendor;

(B) has given to the local government officer or a family member of the officer one or more gifts that have an aggregate value of more than $100 in the 12-month period preceding the date the officer becomes aware that:

(i) a contract between the local governmental entity and vendor has been executed; or

(ii) the local governmental entity is considering entering into a contract with the vendor.

Local Government Code § 176.006(a) and (a-1)

(a) A vendor shall file a completed conflict of interest questionnaire if the vendor has a business relationship with a local governmental entity and:

(1) has an employment or other business relationship with a local government officer of that local governmental entity, or a family member of the officer, described by Section 176.003(a)(2)(A);

(2) has given a local government officer of that local governmental entity, or a family member of the officer, one or more gifts with the aggregate value specified by Section 176.003(a)(2)(B), excluding any gift described by Section 176.003(a-1); or

(3) has a family relationship with a local government officer of that local governmental entity.

(a-1) The completed conflict of interest questionnaire must be filed with the appropriate records administrator not later than the seventh business day after the later of:

(1) the date that the vendor:

(A) begins discussions or negotiations to enter into a contract with the local governmental entity; or

(B) submits to the local governmental entity an application, response to a request for proposals or bids, correspondence, or another writing related to a potential contract with the local governmental entity; or

(2) the date the vendor becomes aware:

(A) of an employment or other business relationship with a local government officer, or a family member of the officer, described by Subsection (a);

(B) that the vendor has given one or more gifts described by Subsection (a); or

(C) of a family relationship with a local government officer.

Form provided by Texas Ethics Commission www.ethics.state.tx.us Revised 1/1/2021

Consideration of Location of Bidder's Principal Place of Business
For Bids of $50,000 up to $100,000 for Services and $500,000 for Commodities
Affidavit of Eligibility

Pursuant to Texas Local Government Code 271.9051, in purchasing real property, personal property that is not affixed to real property, or services, if the City receives one or more bids from a bidder whose principal place of business is in the City of Midland and whose bid is within five percent (5%) of the lowest bid price received by the City from a bidder who is not a resident of the City of Midland, the City may enter into a contract with:

(1) the lowest bidder; or

(2) the bidder whose principal place of business is in the City of Midland if the City Council determines, in writing, that the local bidder offers the City the best combination of contract price and additional economic development opportunities for the City of Midland created by the contract award, including the employment of residents of the City of Midland and increased tax revenues to the City of Midland.

In order to receive consideration, bidders must submit this affidavit to:

Erika Martinez
Purchasing Manager
City of Midland
300 N. Loraine St.,
PO BOX 1152
Midland, TX 79702-1152

Complete all areas below. Incomplete affidavits may be rejected.

Local Business Name: _____

Local Address (must be within the City limits): _____

1. Is the above address the principal place of business for the business named above? ☐ Yes ☐ No
2. How many residents of the City of Midland are employed at the above business location? _____
3. Year your business was established in the City of Midland: _____
4. If you collect sales tax for ANY class of customer, provide the following Reseller information:

   Reseller Permit Number: _____

   Company Name and Address (as it appears on permit):

   _____

   _____

   _____

5. Does your business have more than one office in the State of Texas? ☐ Yes ☐ No
   If Yes, identify the office location considered as the point-of sale for the purpose of sales tax calculation:

   _____

   _____

6. Was the local business required to pay business and/or real property tax for the most recent tax year?

   ☐ Yes ☐ No

   If Yes, did the local business pay any of this tax to the City of Midland? ☐ Yes ☐ No

Under penalty of perjury, the undersigned states that the foregoing statements are true and correct. It is further acknowledged that any person, firm, corporation or entity intentionally submitting false information to the City in an attempt to qualify for eligibility shall be prohibited from bidding on City of Midland products and services for a period of one (1) year.

Authorized Signature: _____ Date: _____

Printed Name and Title: _____

NOTICE TO BIDDERS

IF THIS PURCHASE REQUIRES A CONTRACT, THE ATTACHED **CONTRACT AND INSURANCE REQUIREMENTS ARE NON-NEGOTIABLE**. MODIFICATIONS BY BIDDER/COMPANY OF ANY MATERIAL TERM(S) TO THE CONTRACT DOCUMENTS WILL BE DEEMED A NON-RESPONSIVE BID. NON-RESPONSIVE BIDS WILL BE REJECTED. BIDDER/COMPANY MUST BE WILLING TO SIGN THE CONTRACT AS IS AND WITHOUT MODIFICATIONS, PROVIDE PROPERLY EXECUTED BONDS (IF APPLICABLE) AND PROVIDE INSURANCE SPECIFICALLY AS REQUIRED WITHIN THE CONTRACT DOCUMENTS **WITHIN 21 DAYS** OF THE DATE OF THE TRANSMITTAL LETTER.

IF THE SELECTED BIDDER/COMPANY CANNOT MEET THE ABOVE REQUIREMENTS, THEN **THE CITY RESERVES THE RIGHT TO AWARD THIS PURCHASE TO ANOTHER BIDDER**.

IMPORTANT NOTICE – IF THE CONTRACT DOCUMENTS REQUIRE WORKER'S COMPENSATION INSURANCE, BIDDER/COMPANY MUST CARRY WORKER'S COMPENSATION INSURANCE TO BE ELIGIBLE FOR THIS CONTRACT. IF YOU CANNOT PROVIDE WORKER'S COMPENSATION INSURANCE AS REQUIRED BY STATE OF TEXAS STATUTE, WE RESPECTFULLY REQUEST THAT YOU "NO BID" THIS WORK.

COMPLIANCE: Company agrees that it shall comply with Texas Government Code Section 2252.908, *et seq.*, as amended. Company agrees that it shall comply with Texas Local Government Code Section 176.006, *et seq.*, as amended. For further instructions on how to comply with Texas Government Code Section 2252.908 and Texas Local Government Code Section 176.006,

please go to https://www.ethics.state.tx.us/whatsnew/elf_info_form1295.htm and https://www.ethics.state.tx.us/filinginfo/conflict_forms.htm.

ANY VENDOR WHO FAILS TO COMPLY WITH THE TERMS OF THE AWARD **MAY BE DECLARED AN IRRESPONSIBLE VENDOR**. BIDS SUBMITTED BY SAID VENDOR SHALL NOT BE CONSIDERED AGAIN FOR A MINIMUM PERIOD OF SIX MONTHS AS DETERMINED BY THE CITY MANAGER.

IMPORTANT: READ CAREFULLY BEFORE MAKING BID
GENERAL CONDITIONS OF BIDDING

1. All bids are to be submitted as specified in the procurement document(s).

2. Each Bidder is requested to provide: Descriptive literature clearly marked to show each item on this bid. Any catalog or manufacturer's reference in this proposal is descriptive, but not restrictive, and is used only to indicate type and quality. If, however, the bidder proposes similar but not identical terms, he must furnish all particulars. If no mention is made of any exceptions, it is assumed that he is bidding on the article specified and not on an approved equal and he will be required to deliver exact article specified.

3. Prices should be itemized. (Indicate unit price and extend to show total price.) In case of discrepancy between the unit price and the extension, the unit price shall govern.

4. Unit price for each item offered shall include all discounts; e.g., trade, seasonal, etc. with net 30 days payment terms. Discounts shall not be shown as such but shall be incorporated in the base bid price. Any bid showing discounts will be considered an alternate bid. The City of Midland will not be responsible for any goods delivered without a purchase order number.

5. If the Contract is awarded, it will be awarded to either the lowest responsible bidder, or to the bidder who provides goods or services at the best value for the City of Midland. In determining the best value for the City of Midland, the City of Midland may consider the criteria enumerated in Section 252.043 of the Texas Local Government Code. The City of Midland reserves the right to award by item or by total bid, or to reject any or all bids or parts of bids. Further, the City of Midland reserves all rights granted by Section 271.027 of the Texas Local Government Code. The City of Midland reserves the right to award the bid to the lowest responsible bidder.

6. Time of proposed delivery shall be stated in number of calendar days.

7. NOTE: The City of Midland, Texas is exempt from all Federal, State and City tax. Please do not include these taxes in your bid price or invoice. Taxable items must be so designated, and the City will supply vendor with a Tax Exemption Certificate, properly executed.

8. All items are to be delivered, unloaded and stacked at the location indicated on the Bid Request and Purchase Order.

9. All items are to be delivered F.O.B. to the City of Midland, Texas with freight prepaid and included in the bid.

10. Detailed specifications rule over General specifications (headings, etc.)

11. The City of Midland reserves the right to remove a company from the bid list for (1) continued failure to respond to request for bids, (2) failure to deliver merchandise within promised time, or (3) delivery of substandard merchandise.

12. No officer or employee of the City shall have a financial interest, direct or indirect, in any contract with the City, or be financially interested, directly or indirectly, in the sale to the City of any lands, materials, supplies or services except as allowed under chapter 176 of the Local Government Code. Form CIQ shall be submitted and placed on file with the City of Midland.

13. The City shall determine the most advantageous bid for the City and accept the proposal of the responsible party submitting the lowest and/or most advantageous bid or reject any and all bids.

14. The City of Midland, Texas may consider as informal any bid not prepared and submitted in accordance with the provisions hereof, and may waive, in its sole discretion, any informalities.

15. Public Information. To the extent that Bidder is submitting a bid for a contract described by Section 552.371 of the Texas Government Code, Bidder agrees as follows in accordance with Section 552.372(b) of the Texas Government Code: The requirements of Subchapter J, Chapter 552, Government Code, may apply to this bid, and the contractor or vendor agrees that the contract can be terminated if the contractor or vendor knowingly or intentionally fails to comply with a requirement of that subchapter.

STANDARD PURCHASE TERMS AND CONDITIONS
PURCHASING DIVISION, CITY OF MIDLAND, TEXAS

"Seller", as used herein, has the same meaning as "Company". "Buyer", as used herein, has the same meaning as "City".

Seller and Buyer agree as follows:

1. SELLER TO PACKAGE GOODS - Seller will package goods in accordance with good commercial practice. Each shipping container shall be clearly and permanently marked as follows; (a) Seller's name and address, (b) Consignee's name, and address, and purchase order number, (c) Container number and total number of containers, e.g. box 1 of 4 boxes, and (d) the number of the container bearing the packing slip. Seller shall bear cost of packaging unless otherwise provided. Goods shall be suitably packed to secure lowest transportation costs and to conform with requirements of common carriers and any applicable specifications. Buyer's count or weight shall be final and conclusive on shipments not accompanied by packing lists.

2. SHIPMENT UNDER RESERVATION PROHIBITED - Seller is not authorized to ship the goods under reservation and no tender of a bill of lading will serve as a tender of goods.

3. TITLE & RISK OF LOSS - The title and risk of loss of the goods shall not pass to Buyer until Buyer actually receives and takes possession of the goods at the point or points of delivery in Midland, Texas.

4. NO REPLACEMENT OF DEFECTIVE TENDER - Every tender or delivery of goods must fully comply with all provisions of this contract as to time of delivery, quality and the like. If a tender is made which does not fully conform, this shall constitute a breach and Seller shall not have the right to substitute a conforming tender, provided, where the time for performance has yet expired, the Seller may reasonably notify Buyer of his intention to cure and may then make a conforming tender within the contract time but not afterward.

5. PLACE OF DELIVERY - The place of delivery shall be that set forth in the block of the purchase order entitled "deliver to".

6. INVOICES - Seller shall submit separate ORIGINAL invoices, on each purchase order. Invoices shall indicate the purchase order number. All invoices must be mailed to City of Midland, Accounts Payable, P.O. Box 1152, Midland, TX 79702-1152. Payment will be made within 30 days from the date the invoice and properly executed receiving documents are received by City of Midland, Accounts Payable at the above address. Invoices sent to any other address will delay payment.

7. GRATUITIES - The buyer may, by written notice to the seller, cancel this contract without liability to Seller, if it is determined by Buyer that gratuities, in the form of entertainment, gifts, or otherwise, were offered or given by the seller, or any agent or representative of the Seller, to any officer or employee of the City of Midland with a view toward securing a contract or securing favorable treatment with respect to performing of such a contract. In the event this contract is cancelled by Buyer pursuant to this provision, Buyer shall be entitled, in addition to any other rights and remedies, to recover or withhold the amount of the cost incurred by Seller in providing such gratuities.

8. WARRANTY - PRICE -

a. The price to be paid by the Buyer shall be that contained in Seller's bid which Seller warrants to be no higher than Seller's current prices on order by others for products of the kind and specifications covered by this agreement for similar quantities under similar or like conditions and methods of purchase. In the event Seller breaches this warranty, the prices of the items shall be reduced to the Seller's current prices on order by others, or in the alternative, Buyer may cancel this contract without liability to Seller for breach or Seller's actual expense.

b. The Seller warrants that no person or selling agency has been employed or retained to solicit or secure this contract upon an agreement or understanding for commission, percentage, brokerage, or contingent fee excepting bona fide employees or bona fide established commercial or selling agencies maintained by the Seller for the purpose of securing business. For breach or violation of this warranty the Buyer shall have the right or rights to cancel this contract without liability and to deduct from the contract price, or otherwise recover the full amount of such commission, percentage, brokerage or contingent fee.

9. WARRANTY - PRODUCT - Seller shall not limit or exclude any implied warranties and any attempt to do so shall render this contract voidable at the option of the Buyer. Seller warrants that the goods furnished will conform to the specification, drawings, and description listed in the bid invitation, and to the sample(s) furnished by Seller, if any. In the event of a conflict between the specifications, drawings and descriptions, the specifications shall govern.

10. SAFETY WARRANTY - Seller warrants that the product sold to Buyer shall conform to the standards promulgated by the U.S. Department of Labor under the Occupational Safety and Health Act of 1970. In the event the product does not conform to OSHA standards, Buyer may return the product for correction or replacement at the Seller's expense. In the event Seller fails to make the appropriate correction within a reasonable time, correction made by buyer will be at Seller's expense.

11. RIGHT OF INSPECTION - Buyer shall have the right to inspect the goods at delivery before accepting them.

12. CANCELLATION - Buyer shall have the right to cancel for default all or any part of the undelivered portion of this order if Seller breached any of the terms hereof including warranties of Seller if the Seller becomes insolvent or commits acts of bankruptcy. Such right of cancellation is in addition to and not in lieu of any other remedies which Buyer may have in law or equity.

13. TERMINATION - The performance of work under this order may be terminated in whole, or in part by the Buyer in accordance with this provision. Termination of work hereunder shall be effected by the delivery to Seller of a "Notice of Termination" specifying the extent to which performance of work under the order is terminated and the date upon which such termination becomes effective. Such right of termination is in addition to and not in lieu of the rights of Buyer set forth in Clause 13, herein.

14. FORCE MAJEURE - Neither party shall be held responsible for losses, resulting if the fulfillment of any terms or provisions of this contract is delayed or prevented by any cause not within the control of the party whose performance is interfered with, and which by the exercise of reasonable diligence said party is unable to prevent.

15. ASSIGNMENT - DELEGATION - No right or interest in this contract shall be assigned or delegation of any obligation made by Seller without the written permission of the Buyer. Any attempted assignment or delegation by the Seller shall be wholly void and totally ineffective for all purposes unless made in conformity with this paragraph.

16. MODIFICATIONS - This contract can be modified or rescinded only by a writing signed by both of the parties or their duly authorized agents.

17. INTERPRETATION - PAROL EVIDENCE - This writing, plus any specifications for bids and performance provided by Buyer in its advertisement for bids, is intended by the parties as a final expression of this agreement. No course of prior dealings between the parties and no usage of the trade shall be relevant to supplement or explain any term used in this agreement. Acceptance or acquiescence in a course of performance rendered under this agreement shall not be relevant to determine the meaning of this agreement even though the accepting or acquiescing party has knowledge of the performance and opportunity for objection. Whenever a term defined by the Uniform Commercial Code is used in this agreement, the definition contained in the Code is to control.

18. ADVERTISING - Seller shall not advertise or publish without Buyer's prior consent the fact that Buyer has entered into the contract, except to the extent necessary to comply with proper requests for information from an authorized representative of the federal, state or local government.

19. RIGHT TO ASSURANCE - Whenever one party to the contract in good faith has reason to question the other party's intent to perform he may demand that the other party give written assurance of this intent to perform. In the event that a demand is made and no assurance is given within five (5) days, the demanding party may treat this failure as an anticipatory repudiation of the contract.

20. PROTECTION AGAINST ROYALTIES OR PATENT INFRINGEMENT - The Seller shall pay all royalties and license fees, and shall provide for the use of any design, device, material or process covered by letters patent or copyright by suitable legal agreement with Patentee or Owner thereof. The Seller shall defend all suits or claims for infringement of any patent or copyrights and shall indemnify and save the Buyer harmless from any loss on account thereof, except that Buyer shall defend all such suits and claims and shall be responsible for all such loss when a particular design, device, material or process is allowed to the Seller, the Seller shall indemnify and save Buyer harmless from any loss on account thereof. If the material or process specified or required by Buyer is an infringement, the Seller shall be responsible for such loss unless he promptly gives written notice to the buyer of such infringement.

21. TIME - It is hereby expressly agreed and understood that time is of the essence for the performance of this contract, and any failure by contract to meet the time specifications of this agreement will cause Seller to be in default of this agreement.

22. TAX - The City of Midland is exempt from all Federal, State and City tax. Please do not include these taxes in your bid price or invoice. Taxable items must be so designated, and the City will supply vendor with a Tax Exemption Certificate, properly executed.

23. **INSURANCE –**

The following provisions apply unless the agreement is for the supply of goods only:

Seller shall at all times during the term of this agreement maintain and keep in full force and effect insurance in the following types and minimum amounts with companies authorized to do business in the State of Texas:

Commercial General Liability (including Contractual liability):	
-Personal Injury:	$1,000,000.00 per person
	$1,000,000.00 per occurrence
-Property Damage:	$500,000.00 per occurrence
Business Automobile Liability:	$250,000.00 combined single limit - Personal Injury and Property Damage
Worker's Compensation:	Statutory limits
Employers' Liability:	$500,000.00 per accident or occurrence

The Commercial General Liability shall be on a per project or policy aggregate, including completed operations, and shall be on an occurrence basis.

The Workers' Compensation coverage provided by Seller shall inure to the benefit of employees injured during the course and scope of their employment by Seller pursuant to this agreement.

The Business Automobile Liability insurance provided by Seller shall cover any auto for bodily injury and property damage, including owned vehicles, hired and non-owner vehicles, and employee non-ownership, and the amount of such policy shall be a minimum of $250,000.00 covering any vehicle used for the execution of the work that is the subject of this agreement.

All insurance required pursuant to this agreement, except for Worker's Compensation Insurance, shall name the Buyer as an additional insured on a claims occurred basis. All insurance required pursuant to this agreement, including Worker's Compensation Insurance, shall provide for a waiver of subrogation as to the Buyer.

The parties agree that, prior to the execution of the agreement, Seller shall provide one or more certificates of insurance showing that the requirements of this article have been met, and specifically containing, without limitations, the following endorsement:

"The City of Midland is included as an additional insured, on a claims occurred basis, on all policies except for Worker's Compensation. The Seller and Insurer hereby waive all rights of subrogation with respect to claims against the City of Midland, its agents, employees and officers, on all policies of insurance."

Buyer shall be provided the notice by Seller's insurance provider not later than thirty (30) days prior to any reduction or termination of such coverage. Buyer shall not be required to provide any insurance whatsoever pursuant to this agreement.

Seller shall contractually require all contractors, subcontractors, and sub-subcontractors that work on any portion of the work that is the subject of this agreement to obtain insurance coverage that meets or exceeds the policy requirements and minimum amounts specified herein. All contractors, subcontractors, and sub-subcontractors shall obtain insurance policies that provide blanket waivers of subrogation in favor of the City of Midland and policies that name the City of Midland as an additional insured on a claims occurred basis (except workers compensation).

24. ASSIGNMENT - Seller shall not, either directly or indirectly, assign all or any part of this agreement or any interest, right or privilege herein, without the prior written consent of the Buyer. The issue on whether or not to grant consent to an assignment is in the sole discretion of the Buyer.

25. RELEASE - NOTWITHSTANDING ANY OTHER PROVISIONS, SELLER HEREBY RELEASES, ACQUITS, RELINQUISHES AND FOREVER DISCHARGES BUYER, BUYER'S EMPLOYEES AND OFFICERS, FROM ANY AND ALL DEMANDS, CLAIMS, DAMAGES, OR CAUSES OF ACTION OF ANY KIND WHATSOEVER WHICH SELLER HAS OR MIGHT HAVE IN THE FUTURE, INCLUDING BUT NOT LIMITED TO BREACH OF CONTRACT, QUANTUM MERUIT, CLAIMS UNDER THE DUE PROCESS AND TAKINGS CLAUSES OF THE TEXAS AND UNITED STATES CONSTITUTIONS, TORT CLAIMS, OR BUYER'S NEGLIGENCE.

26. GOVERNING LAW AND VENUE - This agreement shall be governed by the laws of the State of Texas. All performance and payment made pursuant to this agreement shall be deemed to have occurred in Midland County, Texas. Exclusive venue for any claims, suits or any other action arising from or connected in any way to this agreement or the performance of this agreement shall be in Midland County, Texas. The obligations and undertakings of each of the parties to this agreement shall be deemed to have occurred in Midland County, Texas.

27. INDEPENDENT CONTRACTOR - It is expressly understood and agreed that Seller shall perform all work and services described herein as an independent contractor and not as an officer, agent, servant or employee of the Buyer; that Seller shall have exclusive control of and the exclusive right to control the details of the services and work performed hereunder, and all persons performing the same; and shall be solely responsible for the acts and omissions of its officers, agents, employees, contractors and subcontractors; that the doctrine of respondeat superior shall not apply as between Buyer and Seller, its officers, agents, employees, contractors and subcontractors; and that nothing herein shall be construed as creating a partnership or joint enterprise between Buyer and Seller. No person performing any of the work and services described hereunder by Seller shall be considered an officer, agent, servant or employee of the Buyer. Further, it is specifically understood and agreed that nothing in this agreement is intended or shall be construed as creating a "Community of Pecuniary Interest" or "An Equal Right of Control" which would give rise to vicarious liability. Seller shall be an independent contractor under this agreement and shall assume all of the rights, obligations and liabilities, applicable to it as such independent contractor hereunder. The Buyer does not have the power to direct the order in which the work is done. The Buyer shall not have the right to control the means, methods or details of the Seller's work. Seller shall assume exclusive responsibility for the work. Seller is entirely free to do the work in its own way.

28. NOTICE OF ALLEGED BREACH; STATUTORY PREREQUISITES - As a condition precedent to filing suit for alleged damages incurred by an alleged breach of an express or implied provision of this agreement, Seller or his legal representative, shall give the City Manager, or any other reasonable official of the Buyer, notice in writing (consisting of one original and seven copies of notice attached to a copy of this agreement) of such damages, duly verified, within one-hundred-twenty (120) days after the same has been sustained. The discovery rule does not apply to the giving of this notice. The notice shall include when, where and how the damages occurred, the apparent extent thereof, the amount of damages sustained, the amount for which the Seller will settle, the physical and mailing addresses of Seller at the time and date the claim was presented and the physical and mailing addresses of Seller for the six months immediately preceding the occurrence of such damages, and the names and addresses of the witnesses upon whom the Seller relies to establish its claim; and a failure to so notify the City Manager within the time and manner provided herein shall exonerate, excuse and except the Buyer from any liability whatsoever. The Buyer is under no obligation to provide notice to Seller that Seller's notice is insufficient. Buyer reserves the right to request reasonable additional information regarding the claim. Said additional information shall be supplied within thirty (30) days after receipt of notice.

The statutory prerequisites outlined herein constitute jurisdictional requirements pursuant to Section 271.154 of the Texas Local Government Code and Section 311.034 of the Texas Government Code. Notwithstanding any other provision, Seller's failure to comply with the requirements herein shall perpetually bar Seller's claim for damages under Chapter 271 of the Texas Local Government Code, and Section 311.034 of the Texas Government Code, regardless if Buyer has actual or constructive notice or knowledge of said claim or alleged damages. Seller agrees that the requirements of this entire agreement are reasonable.

29. INDEMNITY (NOT APPLICABLE TO PURCHASE AGREEMENTS) - SELLER WILL INDEMNIFY AND HOLD HARMLESS AND DEFEND BUYER AND ALL OF BUYER'S OFFICERS, AGENTS AND EMPLOYEES FROM ALL SUITS, ACTIONS, CLAIMS, DAMAGES, PERSONAL INJURIES, LOSSES, PROPERTY DAMAGE AND EXPENSES OF ANY CHARACTER WHATSOEVER, INCLUDING REASONABLE ATTORNEY'S FEES,

BROUGHT FOR OR ON ACCOUNT OF ANY INJURIES OR DAMAGES RECEIVED OR SUSTAINED BY ANY PERSON OR PERSONS OR PROPERTY, ON ACCOUNT OF ANY NEGLIGENT ACT OF SELLER, its agents or employees, or any subcontractor, arising out of, or resulting from, Seller's use of, or activities on, the agreement premises, and Seller will be required to pay any judgment with costs which may be obtained against Buyer or any of its officers, agents or employees, including reasonable attorney's fees.

SELLER SHALL INDEMNIFY AND HOLD HARMLESS AND DEFEND BUYER AND ALL OF BUYER'S OFFICERS, AGENTS AND EMPLOYEES FROM ALL SUITS, ACTIONS, CLAIMS, DAMAGES, ACCIDENTAL DEATH, PERSONAL INJURIES, PROPERTY DAMAGE, LOSSES, AND EXPENSE OF ANY CHARACTER WHATSOEVER INCLUDING REASONABLE ATTORNEY'S FEES, BROUGHT FOR OR ON ACCOUNT OF ANY INJURIES OR DAMAGES RECEIVED OR SUSTAINED BY ANY PERSON OR PERSONS OR PROPERTY, ON ACCOUNT OF ANY NEGLIGENT ACT OF BUYER, BUYER'S OFFICERS, AGENTS AND EMPLOYEES, WHETHER SUCH NEGLIGENT ACT WAS THE SOLE PROXIMATE CAUSE OF THE INJURY OR DAMAGE OR A PROXIMATE CAUSE JOINTLY AND CONCURRENTLY WITH SELLER OR SELLER'S EMPLOYEES, AGENTS OR SUBCONTRACTORS NEGLIGENCE, IN THE EXECUTION, SUPERVISION AND OPERATIONS GROWING OUT OF OR IN ANY WAY CONNECTED WITH THE PERFORMANCE OF THIS AGREEMENT AND SELLER WILL BE REQUIRED TO PAY ANY JUDGMENT WITH COSTS WHICH MAY BE OBTAINED AGAINST BUYER OR ANY OF BUYER'S OFFICERS, AGENTS OR EMPLOYEES, INCLUDING ATTORNEY'S FEES.

30. SOVEREIGN IMMUNITY - By executing this agreement the Buyer is not waiving its right of sovereign immunity. The Buyer is retaining its immunity from suit. The Buyer is not granting consent to be sued by legislative resolution or action. **THERE IS NO WAIVER OF SOVEREIGN IMMUNITY**.

31. THIRD PARTY BENEFICIARY - The Buyer's approval of this agreement does not create a third party beneficiary. There is no third party beneficiary to this agreement. No person or entity who is not a party to this agreement shall have any third party beneficiary or other rights hereunder.

32. <u>ATTORNEY FEES</u> - BY EXECUTING THIS AGREEMENT, SELLER AGREES TO WAIVE AND DOES HEREBY KNOWINGLY, CONCLUSIVELY, VOLUNTARILY AND INTENTIONALLY WAIVE ANY CLAIM IT HAS OR MAY HAVE IN THE FUTURE AGAINST THE BUYER, REGARDING THE AWARD OF ATTORNEY'S FEES, WHICH ARE IN ANY WAY RELATED TO THE AGREEMENT, OR THE CONSTRUCTION, INTERPRETATION OR BREACH OF THE AGREEMENT. THE SELLER SPECIFICALLY AGREES THAT IF THE SELLER BRINGS OR COMMENCES ANY LEGAL ACTION OR PROCEEDING RELATED TO THIS AGREEMENT, THE CONSTRUCTION, INTERPRETATION, VALIDITY OR BREACH OF THIS AGREEMENT, INCLUDING BUT NOT LIMITED TO ANY ACTION PURSUANT TO THE PROVISIONS OF THE TEXAS UNIFORM DECLARATORY JUDGMENTS ACT (TEXAS CIVIL PRACTICE AND REMEDIES CODE SECTION 37.001, ET. SEQ., AS AMENDED), OR CHAPTER 271 OF THE TEXAS LOCAL GOVERNMENT CODE, THE SELLER AGREES TO ABANDON, WAIVE AND RELINQUISH ANY AND ALL RIGHTS TO THE RECOVERY OF ATTORNEY'S FEES TO WHICH SELLER MIGHT OTHERWISE BE ENTITLED.

SELLER AGREES THAT THIS IS THE VOLUNTARY AND INTENTIONAL RELINQUISHMENT AND ABANDONMENT OF A PRESENTLY EXISTING KNOWN RIGHT. SELLER ACKNOWLEDGES THAT IT UNDERSTANDS ALL TERMS AND CONDITIONS OF THE AGREEMENT. THE SELLER FURTHER ACKNOWLEDGES AND AGREES THAT THERE WAS AND IS NO DISPARITY OF BARGAINING POWER BETWEEN THE BUYER AND THE SELLER. THIS SECTION SHALL NOT BE CONSTRUED OR INTERPRETED AS A WAIVER OF SOVEREIGN IMMUNITY.

THE SELLER AND BUYER ARE RELYING ON THEIR OWN JUDGMENT. EACH PARTY HAD THE OPPORTUNITY TO DISCUSS THIS AGREEMENT WITH LEGAL COUNSEL PRIOR TO ITS EXECUTION.

33. CONSIDERATION - The terms of this agreement are supported by good and valuable consideration, the receipt and sufficiency of which is hereby acknowledged by the parties named herein.

34. CERTIFICATION - In accordance with the Texas Local Government Code, the City of Midland Department of Facilities and Fleet Management does hereby certify that the City of Midland is in compliance with Sections 252, 271 and all applicable sections of the Texas Local Government Code and other state law as it applies to procurement and contracting issues.

35. FEDERAL WAGE REQUIREMENTS - If applicable, the Davis-Bacon Act, 29 CFR 5.5, and any related acts or regulations are hereby incorporated by reference and made a part of this agreement and all terms and requirements under said laws, by such incorporation, are made terms and requirements of this agreement, to which the parties to this agreement have agreed to be bound.

36. COMPLIANCE WITH FEDERAL, STATE AND LOCAL LAWS - Seller shall at all times during the term of this agreement comply with applicable federal, state, and local laws regarding Seller's activities pursuant to this agreement, including but not limited to all applicable sections of the Municipal Code of Midland, Texas, as may be amended, said sections being hereby incorporated by reference and made a part of this agreement for all legal purposes. Failure to abide by any such law mentioned herein constitutes grounds for the immediate termination of this agreement.

EXHIBIT D - Building Wage Rate rev 01/05/2024

"General Decision Number: TX20240261 01/05/2024

Superseded General Decision Number: TX20230261

State: Texas

Construction Type: Building

County: Midland County in Texas.

BUILDING CONSTRUCTION PROJECTS (does not include single family homes or apartments up to and including 4 stories).

Note: Contracts subject to the Davis-Bacon Act are generally required to pay at least the applicable minimum wage rate required under Executive Order 14026 or Executive Order 13658. Please note that these Executive Orders apply to covered contracts entered into by the federal government that are subject to the Davis-Bacon Act itself, but do not apply to contracts subject only to the Davis-Bacon Related Acts, including those set forth at 29 CFR 5.1(a)(1).

If the contract is entered into on or after January 30, 2022, or the contract is renewed or extended (e.g., an option is exercised) on or after January 30, 2022:	. Executive Order 14026 generally applies to the contract. . The contractor must pay all covered workers at least $17.20 per hour (or the applicable wage rate listed on this wage determination, if it is higher) for all hours spent performing on the contract in 2024.
If the contract was awarded on or between January 1, 2015 and January 29, 2022, and the contract is not renewed or extended on or after January 30, 2022:	. Executive Order 13658 generally applies to the contract. . The contractor must pay all covered workers at least $12.90 per hour (or the applicable wage rate listed on this wage determination, if it is higher) for all hours spent performing on that contract in 2024.

The applicable Executive Order minimum wage rate will be adjusted annually. If this contract is covered by one of the Executive Orders and a classification considered necessary for performance of work on the contract does not appear on this wage determination, the contractor must still submit a conformance request.

Additional information on contractor requirements and worker protections under the Executive Orders is available at http://www.dol.gov/whd/govcontracts.

Modification Number | Publication Date
0 | 01/05/2024

BOIL0074-003 07/01/2023

	Rates	Fringes
BOILERMAKER	$ 37.00	24.64

ENGI0178-005 06/01/2020

	Rates	Fringes
POWER EQUIPMENT OPERATOR		
(1) Tower Crane	$ 32.85	13.10
(2) Cranes with Pile Driving or Caisson Attachment and Hydraulic Crane 60 tons and above	$ 28.75	10.60
(3) Hydraulic cranes 59 Tons and under	$ 32.35	13.10

IRON0084-011 06/01/2023

	Rates	Fringes
IRONWORKER, ORNAMENTAL	$ 27.51	8.13

PLUM0404-001 09/01/2022

	Rates	Fringes
PLUMBER	$ 28.64	10.65

SUTX2014-037 07/21/2014

	Rates	Fringes
BRICKLAYER	$ 20.00	0.00
CARPENTER	$ 13.82 **	0.00
CEMENT MASON/CONCRETE FINISHER	$ 13.76 **	0.00
ELECTRICIAN	$ 23.18	6.31
INSULATOR - MECHANICAL (Duct, Pipe & Mechanical System Insulation)	$ 19.77	7.13
IRONWORKER, REINFORCING	$ 12.27 **	0.00
IRONWORKER, STRUCTURAL	$ 22.16	5.26
LABORER: Common or General	$ 11.80 **	0.00
LABORER: Mason Tender - Brick	$ 11.38 **	0.00
LABORER: Mason Tender - Cement/Concrete	$ 10.58 **	0.00
LABORER: Pipelayer	$ 12.49 **	2.13
LABORER: Roof Tearoff	$ 11.28 **	0.00
OPERATOR: Backhoe/Excavator/Trackhoe	$ 14.25 **	0.00
OPERATOR: Bobcat/Skid Steer/Skid Loader	$ 13.93 **	0.00
OPERATOR: Bulldozer	$ 18.29	1.31
OPERATOR: Drill	$ 16.22 **	0.34
OPERATOR: Forklift	$ 14.83 **	0.00
OPERATOR: Grader/Blade	$ 13.37 **	0.00
OPERATOR: Loader	$ 13.55 **	0.94
OPERATOR: Mechanic	$ 17.52	3.33
OPERATOR: Paver (Asphalt, Aggregate, and Concrete)	$ 16.03 **	0.00

OPERATOR: Roller.....$ 12.70 ** 0.00

PAINTER (Brush, Roller, and Spray).....$ 15.00 ** 0.73

PIPEFITTER.....$ 25.80 8.55

ROOFER.....$ 14.75 ** 0.00

SHEET METAL WORKER (HVAC Duct Installation Only).....$ 22.73 7.52

SHEET METAL WORKER, Excludes HVAC Duct Installation.....$ 19.50 0.00

TILE FINISHER.....$ 11.22 ** 0.00

TILE SETTER.....$ 14.74 ** 0.00

TRUCK DRIVER: Dump Truck.....$ 12.39 ** 1.18

TRUCK DRIVER: Flatbed Truck.....$ 19.65 8.57

TRUCK DRIVER: Semi-Trailer Truck.....$ 12.50 ** 0.00

TRUCK DRIVER: Water Truck.....$ 12.00 ** 4.11

WELDERS - Receive rate prescribed for craft performing operation to which welding is incidental.

==========

** Workers in this classification may be entitled to a higher minimum wage under Executive Order 14026 ($17.20) or 13658 ($12.90). Please see the Note at the top of the wage determination for more information. Please also note that the minimum wage requirements of Executive Order 14026 are not currently being enforced as to any contract or subcontract to which the states of Texas, Louisiana, or Mississippi, including their agencies, are a party.

Note: Executive Order (EO) 13706, Establishing Paid Sick Leave for Federal Contractors applies to all contracts subject to the Davis-Bacon Act for which the contract is awarded (and any solicitation was issued) on or after January 1, 2017. If this contract is covered by the EO, the contractor must provide

employees with 1 hour of paid sick leave for every 30 hours they work, up to 56 hours of paid sick leave each year. Employees must be permitted to use paid sick leave for their own illness, injury or other health-related needs, including preventive care; to assist a family member (or person who is like family to the employee) who is ill, injured, or has other health-related needs, including preventive care; or for reasons resulting from, or to assist a family member (or person who is like family to the employee) who is a victim of, domestic violence, sexual assault, or stalking. Additional information on contractor requirements and worker protections under the EO is available at https://www.dol.gov/agencies/whd/government-contracts.

Unlisted classifications needed for work not included within the scope of the classifications listed may be added after award only as provided in the labor standards contract clauses (29CFR 5.5 (a) (1) (iii)).

The body of each wage determination lists the classification and wage rates that have been found to be prevailing for the cited type(s) of construction in the area covered by the wage determination. The classifications are listed in alphabetical order of ""identifiers"" that indicate whether the particular rate is a union rate (current union negotiated rate for local), a survey rate (weighted average rate) or a union average rate (weighted union average rate).

Union Rate Identifiers

A four letter classification abbreviation identifier enclosed in dotted lines beginning with characters other than ""SU"" or ""UAVG"" denotes that the union classification and rate were prevailing for that classification in the survey. Example: PLUM0198-005 07/01/2014. PLUM is an abbreviation identifier of the union which prevailed in the survey for this classification, which in this example would be Plumbers. 0198 indicates the local union number or district council number where applicable, i.e., Plumbers Local 0198. The next number, 005 in the example, is an internal number used in processing the wage determination. 07/01/2014 is the effective date of the most current negotiated rate, which in this example is July 1, 2014.

Union prevailing wage rates are updated to reflect all rate

changes in the collective bargaining agreement (CBA) governing this classification and rate.

Survey Rate Identifiers

Classifications listed under the ""SU"" identifier indicate that no one rate prevailed for this classification in the survey and the published rate is derived by computing a weighted average rate based on all the rates reported in the survey for that classification. As this weighted average rate includes all rates reported in the survey, it may include both union and non-union rates. Example: SULA2012-007 5/13/2014. SU indicates the rates are survey rates based on a weighted average calculation of rates and are not majority rates. LA indicates the State of Louisiana. 2012 is the year of survey on which these classifications and rates are based. The next number, 007 in the example, is an internal number used in producing the wage determination. 5/13/2014 indicates the survey completion date for the classifications and rates under that identifier.

Survey wage rates are not updated and remain in effect until a new survey is conducted.

Union Average Rate Identifiers

Classification(s) listed under the UAVG identifier indicate that no single majority rate prevailed for those classifications; however, 100% of the data reported for the classifications was union data. EXAMPLE: UAVG-OH-0010 08/29/2014. UAVG indicates that the rate is a weighted union average rate. OH indicates the state. The next number, 0010 in the example, is an internal number used in producing the wage determination. 08/29/2014 indicates the survey completion date for the classifications and rates under that identifier.

A UAVG rate will be updated once a year, usually in January of each year, to reflect a weighted average of the current negotiated/CBA rate of the union locals from which the rate is based.

WAGE DETERMINATION APPEALS PROCESS

1.) Has there been an initial decision in the matter? This can be:

* an existing published wage determination
* a survey underlying a wage determination
* a Wage and Hour Division letter setting forth a position on a wage determination matter
* a conformance (additional classification and rate) ruling

On survey related matters, initial contact, including requests for summaries of surveys, should be with the Wage and Hour National Office because National Office has responsibility for the Davis-Bacon survey program. If the response from this initial contact is not satisfactory, then the process described in 2.) and 3.) should be followed.

With regard to any other matter not yet ripe for the formal process described here, initial contact should be with the Branch of Construction Wage Determinations. Write to:

Branch of Construction Wage Determinations
Wage and Hour Division
U.S. Department of Labor
200 Constitution Avenue, N.W.
Washington, DC 20210

2.) If the answer to the question in 1.) is yes, then an interested party (those affected by the action) can request review and reconsideration from the Wage and Hour Administrator (See 29 CFR Part 1.8 and 29 CFR Part 7). Write to:

Wage and Hour Administrator
U.S. Department of Labor
200 Constitution Avenue, N.W.
Washington, DC 20210

The request should be accompanied by a full statement of the interested party's position and by any information (wage payment data, project description, area practice material, etc.) that the requestor considers relevant to the issue.

3.) If the decision of the Administrator is not favorable, an interested party may appeal directly to the Administrative Review Board (formerly the Wage Appeals Board). Write to:

Administrative Review Board
U.S. Department of Labor
200 Constitution Avenue, N.W.
Washington, DC 20210

4.) All decisions by the Administrative Review Board are final.

==========

END OF GENERAL DECISION"

City Council Meeting

Item Number: 10

Meeting Date: September 24, 2024

To: City Council / City Manager

From: Erika Martinez, Manager, Purchasing

Subject: **RESOLUTION AUTHORIZING THE SOLE-SOURCE PURCHASE OF A ONE-YEAR MAINTENANCE AND LICENSE RENEWAL FOR THE UTILITY BILLING MANAGEMENT SYSTEM FROM SMARTWORKS, A DIVISION OF N. HARRIS COMPUTER CORPORATION FOR A TOTAL COST OF $108,855.52 (DISTRICT: NONE) (GENERAL SERVICES) (PROVIDE SOUND GOVERNANCE & FISCAL MANAGEMENT)**

Purpose:

Resolution authorizing the sole source purchase of a one-year maintenance and license renewal for the Utility Billing Management System from Smartworks, a division of N. Harris Computer Corporation for a total of $108,855.52.

Recommended City Council Action:

Approve

Fiscal Impact:

Funding is available in the FY 2025 Utility Fund operating budget.

Strategic Priority:

(Provide Sound Governance & Fiscal Management)

Discussion:

The City Customer Service Department would like to continue with the automatic meter system for the water meters. Smart Works, a division of N. Harris Computer Corporation is the sole source provider of service for this Utility Data Management System. According to Texas Local Government Code 252.022 (a) (7) (A), competitive bidding requirements do not apply to items

that are available from only one source because of patents, copyrights, secret processes, or natural monopolies. Please see the attached memo from Jennifer Shipp, Customer Service and City Utility Billing Manager.

Therefore, please consider authorizing the sole source purchase of a one-year maintenance and license renewal for the Utility Billing Management System from Smartworks, a division of N. Harris Computer Corporation of Ontario, Canada for a total of $108,855.52.

Morris Williams Jr.

City Manager's Office

MEMORANDUM

TO: City Council

FROM: Jennifer Shipp, Customer Service and City Utility Billing Manager

DATE: September 9, 2024

SUBJECT: Request for Approval - SmartWorks One-Year License Renewal and Support

Purpose:

This memorandum seeks approval for the expenditure of $108,855.52 to renew the one-year license and support for SmartWorks, a division of N. Harris Computer Corporation.

Background:

SmartWorks is an integral component of our current IT infrastructure, specifically used to generate usage graphs that are displayed on our customer portal. These graphs provide customers with valuable insights into their consumption patterns, empowering them to make informed decisions about their usage.

Justification:

- **Essential Service:** The SmartWorks system is critical for maintaining the functionality of our customer portal and delivering the level of service our customers expect.
- **Contractual Obligation:** Renewal of the license and support is necessary to ensure continued access to the software and receive timely technical assistance when needed.
- **Cost-Effectiveness:** The proposed renewal cost is in line with industry standards for similar software solutions.

Budgetary Impact:

The cost of $108,855.52 is allocated within the current fiscal year's budget under the IT Services line item.

Recommendation:

I strongly recommend approving the one-year license renewal and support for SmartWorks. This expenditure is vital for maintaining the quality of our customer portal and ensuring the continued smooth operation of our services.

Action Requested:

Please review and approve the attached expenditure request for the SmartWorks license renewal and support.

Attachments:

- Expenditure Request Form
- SmartWorks License Renewal Quote

Thank you for your consideration.

Jennifer Shipp

RESOLUTION NO. _____

RESOLUTION AUTHORIZING THE SOLE-SOURCE PURCHASE OF A ONE-YEAR MAINTENANCE AND LICENSE RENEWAL FOR THE UTILITY BILLING MANAGEMENT SYSTEM FROM SMARTWORKS, A DIVISION OF N. HARRIS COMPUTER CORPORATION FOR A TOTAL COST OF $108,855.52

WHEREAS, the Utility Billing Management System is a specialized software designed to handle the billing and management of public utilities; and

WHEREAS, the sole-source provider of maintenance and license renewals for said system, SmartWorks, a division of N. Harris Computer Corporation, submitted a total quote of $108,855.52, as shown on the quote attached hereto as Exhibit A and incorporated herein for all purposes; and

WHEREAS, a one-year maintenance and license renewal for said system is available only from SmartWorks, a division of N. Harris Computer Corporation; and

WHEREAS, the City Council finds the price proposed for a one-year maintenance and license renewal for said system to be fair and reasonable; and

WHEREAS, the City Council finds it to be in the public interest to authorize the purchase of a one-year maintenance and license renewal for said system from SmartWorks, a division of N. Harris Computer Corporation;

NOW, THEREFORE, BE IT RESOLVED BY THE CITY COUNCIL OF THE CITY OF MIDLAND, TEXAS:

SECTION ONE. That the City Manager is hereby authorized and directed to purchase a one-year maintenance and license renewal, as indicated on Exhibit A, from SmartWorks, a division of N. Harris Computer Corporation for a total cost of $108,855.52.

SECTION TWO. That funding shall be available in the FY 2025 Utility Fund operating budget.

SECTION THREE. That the City Comptroller is hereby authorized and directed to pay SmartWorks, a division of N. Harris Computer Corporation from available funds

upon receipt of proper invoices or statements approved by the City Manager.

On motion of Council member _____, seconded by Council member _____, the above and foregoing resolution was adopted by the City Council of the City of Midland at a regular meeting on the _____ day of _____, A.D., 2024, by the following vote:

Council members voting "AYE":

Council members voting "NAY":

_____
Lori Merritt Blong, Mayor

ATTEST:

_____
Marcia Bentley-German, City Secretary

RECOMMENDED AND APPROVED:

_____
Tommy Gonzalez, City Manager

APPROVED AS TO CONTENT
AND COMPLETENESS:

_____
Regina Stephenson, General Services Director

APPROVED AS TO FORM ONLY:

_____
John Ohnemiller, City Attorney

HARRIS

Invoice	**NSEMN0000472**
Date	**7/26/2024**
Page	**1 of 1**

Remit To: Harris Computer Systems
62133 Collections Center Drive
Chicago, IL 60693-0621

Bill to

City of Midland
300 N. Loraine
P.O. Box 1152
Midland, TX 79702
USA

Ship to

City of Midland
Accounts Payable
300 N. Loraine
P.O. Box 1152
Midland, TX 79702
USA

PO Number	Customer No.	Salesperson ID	Shipping Method	Payment Terms
	MID05		DELIVERY	MN OCT

Ordered	Item Number	Description	Unit Price	Ext Price
1.00	NSTR	Northstar CIS: 10/1/2024 to 9/30/2025	US$76,987.80	US$76,987.80
1.00	NS-HOST	Hosting - Annual Hosting Agreement: 10/1/2024 to 9/30/2025	US$17,687.16	US$17,687.16
1.00	NSTR	Maintenance CO3 - Metersense Interface: 10/1/2024 to 9/30/2025	US$2,345.55	US$2,345.55
1.00	NSTR	Cashiering Deployment Maintenance: 10/1/2024 to 9/30/2025	US$759.07	US$759.07
1.00	NSTR	Silverblaze Maintenance: 10/1/2024 to 9/30/2025	US$11,075.94	US$11,075.94

Invoice Questions? Please call Lisa Ross at 613-226-5511 ext 2192 OR e-mail lross@harriscomputer.com. GST/HST # 10387 5241 RT0001

Subtotal	US$108,855.52
Misc	US$0.00
Tax	US$0.00
Freight	US$0.00
Trade Discount	US$0.00
Total	US$108,855.52

NORTH|STAR™
UTILITIES SOLUTIONS

(844) 888-9904
info@northstarutilities.com
www.northstarutilities.com
1 Antares Dr, Ottawa, ON, K2E 8C4

Jennifer Shipp
Customer Service and Utility Billing, Division Manager III
1030 Andrews Highway Ste 220
Midland, TX
79701

September 16, 2024

RE: NorthStar and City of Midland Partnership

Dear Jennifer,

Since 1978, NorthStar Utilities Solutions (NorthStar) listed as N. Harris Corporation under Constellation Software Inc (CSI) has been a leader in providing utility billing software solutions. This letter is to confirm that NorthStar CIS and company add on modules and training are a sole source product, manufactured, sold, consulted on and distributed exclusively by NorthStar. As such, associated products or consulting must be purchased directly from NorthStar.

NorthStar is a member of the Harris Utilities Group, one of the largest CIS providers in North America. As such, NorthStar supports approximately 200 municipalities across the continent, remaining focused exclusively on Municipal Utility Customer Service and Billing. NorthStar continues to invest heavily in new products and technologies, with approximately 15% of total revenue reinvested in product development and 35% of our staff devoted to Research & Development. Midland continues to benefit from this ongoing investment. NorthStar's most recent solution is the CIS7 suite of products. This includes CSR7, a cloud-based SaaS customer information system that has all the features you expect from NorthStar, in a newly designed, web-based interface. NorthStar has also expanded the Harris implementation options by offering solutions such as SilverBlaze (customer engagement portal), SmartVX (personalized video marketing), and Service-Link (mobile service order management).

Our product direction and priorities are driven by customers like Midland. Our ongoing R&D investment ensures continuous and significant enhancements to the solutions our customers and the communities you serve depend on. Beyond considerable organizational and process improvements, our commitment to modernization continues to be a priority, having undergone complete UI/UX redesigns of core solutions. This revitalization has resonated with both existing customers and prospective ones.

Thank you for your continued partnership.
To your continued success,

AEvans

Andrea Evans
Senior Sales Account Manager
P: +1 312-668-9102
E: AEVANS@harriscomputer.com

City Council Meeting

Item Number: 11

Meeting Date: September 24, 2024

To: City Council / City Manager

From: Erika Martinez, Manager, Purchasing

Subject: RESOLUTION AUTHORIZING THE PURCHASE OF AN ESTIMATED ANNUAL SUPPLY OF CHEMICALS NEEDED FOR THE TREATMENT OF DRINKING WATER FOR FISCAL YEAR 2025 FROM MULTIPLE BIDDERS, FOR A TOTAL COST OF $3,591,792.80 (DISTRICT: ALL) (GENERAL SERVICES) (QUALITY OF LIFE AND PLACE)

Purpose:

Resolution approving the purchase of an estimated annual supply of 722,000 pounds and 40 – 150 pound cylinders of chlorine; 400,000 gallons of liquid ammonium sulfate 40%; 2,000 tons of Aluminum Sulfate; 20,000 gallons of polymer; 25 tons of powered activated carbon; 5,000 gallons of liquid copper sulfate 25%; 10,000 gallons of liquid copper sulfate pentahydrate 19.8%; 260,000 pounds of sodium permanganate – 20%, and 203,000 25% sodium hydroxide solution for the treatment of drinking water for Fiscal Year 2025.

Recommended City Council Action:

Approve

Fiscal Impact:

Funding is available in the FY2025 Utilities Fund operating budget.

Strategic Priority:

(Quality of Life and Place)

Discussion:

The City Manager approved specifications and authorized advertisement for bids for an estimated annual supply of chemicals for the treatment of the City's drinking water. Sixty-five

(65) bid requests were issued. We received twelve (12) bids. Staff recommends awarding each chemical to the respective low, most advantageous or sole bidders as shown in the table below. Please see the attached memo from Raymond Saddler, Water Purification Plant Superintendent, for more information.

Therefore, please consider a resolution awarding an estimated annual supply of water treatment chemicals as shown in the table below:

Items	Bidders	Cost
1	PVS DX, Inc. of Sweetwater, Texas	$884,089.00
2	Pencco, Inc of San Felipe, Texas	$616,000.00
3 & 7	Chameleon Industries, Inc. of Mesquite, Texas	$1,120,000.00
4	Polydyne, Inc. of Riceboro, Georgia	$152,400.00
5	Carbon Activated Corporation of Compton, California	$67,500.00
6	Catalynt Solutions of Edmonds, Washington	$59,750.00
8 & 9	Univar Solutions USA Inc. of Phoenix, Arizona	$692,053.80
	Total estimated cost for Fiscal Year 2025	**$3,591,792.80**

Morris Williams Jr.

City Manager's Office

INTEROFFICE MEMORANDUM

TO: Regina Stephenson, Director of General Services

FROM: Raymond Saddler, Water Purification Plant Superintendent

SUBJECT: Drinking water treatment chemicals for FY2025

DATE: September 5, 2024

The recommendation for the drinking water treatment chemicals this year are as follows:

Items 1: for chlorine should be awarded to **PVX-DS** (DPC Industries)**, Inc**. We are recommending accepting the single bid from DPC Industries, Inc. DPC Industries has been the single bidder for the last 14 years. See chart below:

	2010	2011	2012	2013	2014	2015	2016	2017
Liquid Chlorine	.3435	.346	.354	.359	.347	.3365	.353	.367
Chlorine Cylinders	178.00	178.00	178.00	178.00	171.00	169.00	178.00	187.50
	2018	**2019**	**2020**	**2021**	**2022**	**2023**	**2024**	
Liquid Chlorine	.397	.417	.421	.670	1.17	1.2145	1.215	
Chlorine Cylinders	192.00	207.00	207.00	275.00	290.00	290.00	XXXX	XXXXX

Item 2: for liquid ammonium sulfate should be awarded to the low bidder **Pencco, Inc**

Item 3: for aluminum sulfate should be awarded to the low bidder, **Chameleon Industries**.

Item 4: for polymer should be awarded to the Low bidder **Polydyne, Inc**.

Item 5: for powdered activated carbon should be awarded to the low bidder, **Carbon Activated Corp**

Item :6 for liquid copper sulfate 25% should be awarded to the Non-low bidder, **Catalynt Solutions** Due to the low bidders not meeting Specifications **(MIKO Services-Did not submit Chemical Specs)** and/or non-performance from previous awarded bids **(Shannon & Chemrite failed to provide chemicals on previous awarded bids in past)**

Item 7: for liquid copper sulfate Pentahydrate 19.8% Molluscicide should be awarded to the low bidder, **Chameleon Industries**

Item 8: for sodium permanganate should be awarded to the none-low bidder, **Univar Solutions USA Inc**. Due to the low bidders **(MIKO Services-Did not submit Specs nor Proof of Origin 40% Permanganate)** not meeting Specifications and/or non-performance from previous awarded bids **(Shannon & Chemrite failed to provide chemicals on previous awarded bids in past)**

Item 9: for sodium Hydroxide should be awarded to the low bidder, **Univar Solutions USA Inc**.

RESOLUTION NO. _____

RESOLUTION AUTHORIZING THE PURCHASE OF AN ESTIMATED ANNUAL SUPPLY OF CHEMICALS NEEDED FOR THE TREATMENT OF DRINKING WATER FOR FISCAL YEAR 2025 FROM MULTIPLE BIDDERS, FOR A TOTAL COST OF $3,591,792.80

WHEREAS, the City Manager approved the specifications and authorized the advertisement for bids for 722,000 pounds of chlorine; 400,000 gallons of liquid ammonium sulfate; 2,000 tons of aluminum sulfate; 20,000 gallons of polymer; 25 tons of powdered activated carbon; 5,000 gallons of liquid copper sulfate 25%; 10,000 gallons of liquid copper sulfate pentahydrate 19.8%; 260,000 pounds of sodium permanganate - 20% solution; and 203,000 gallons of 25% sodium hydroxide for the treatment of drinking water for fiscal year 2024; and

WHEREAS, Bid No. 25000006 was opened on August 21, 2024 with the lowest and/or most advantageous bids being submitted as follows and as shown on the bid tabulation attached hereto as Exhibit "A" and incorporated herein for all legal purposes:

Items	Bidders	Cost
1	DPC Industries, Inc., of Sweetwater, Texas	$884,089.00
2	Pencco, Inc of San Felipe, Texas	$616,000.00
3 and 7	Chameleon Industries, Inc., of Mesquite, Texas	$1,120,000.00
4	Polydyne, Inc., of Riceboro, Georgia	$152,400.00
5	Carbon Activiated Corporation of Compton, California	$67,500.00
6	Catalynt Solutions of Edmonds, Washington	$59,7500.00
8 and 9	Univar Solutions USA Inc. of Phoenix, Arizona	$692,053.80
	Total estimated cost for Fiscal Year 2025	**$3,591,792.80**

WHEREAS, the Council finds the price proposed by the bidders as shown above to be fair and reasonable; and

WHEREAS, the City Council finds it to be in the public interest to authorize the purchase of chemicals for the treatment of the City's drinking water from DPC Industries, Inc., of Sweetwater, Texas, Pencco, Inc, of San Felipe, Texas, Chameleon Industries, Inc. of Mesquite, Texas, Polydyne, Inc., of Riceboro, Georgia, Carbon Activated Corporation of Compton, California, Catalynt Solutions of Edmonds, Washington, and Univar Solutions USA Inc. of Phoenix, Arizona;

NOW, THEREFORE, BE IT RESOLVED BY THE CITY COUNCIL OF THE CITY OF MIDLAND, TEXAS:

SECTION ONE. That the City Manager is hereby authorized and directed to purchase chemicals for the treatment of the City's drinking water from DPC Industries, Inc., of Sweetwater, Texas, Pencco, Inc, of San Felipe, Texas, Chameleon Industries, Inc. of Mesquite, Texas, Polydyne, Inc., of Riceboro, Georgia, Carbon Activated Corporation of Compton, California, Catalynt Solutions of Edmonds, Washington, and Univar Solutions USA Inc. of Phoenix, Arizona for a total cost of $3,591,792.80.

SECTION TWO. Funding shall be available in the FY2025 Utilities Fund operating budget.

SECTION THREE. That upon receipt of proper invoice or statement approved by the City Manager, the City Comptroller is hereby authorized and directed to pay for said chemicals for the treatment of the City's drinking water out of funds available in the FY2025 Water and Sewer operating budget.

On motion of Council member _____, seconded by Council member _____, the above and foregoing resolution was adopted by the City Council of the City of Midland at a regular meeting on the _____ day of _____, A.D., 2024, by the following vote:

Council members voting "AYE":

Council members voting "NAY":

_____
Lori Merritt Blong, Mayor

ATTEST:

_____
Marcia Bentley-German, City Secretary

RECOMMENDED AND APPROVED:

_____
Tommy Gonzalez, City Manager

APPROVED AS TO CONTENT
AND COMPLETENESS:

_____
Regina Stephenson, General Services Director

APPROVED ONLY AS TO FORM:

_____
John Ohnemiller, City Attorney

25000006 Annual Chemical for the Water Purification Plant
Bid Opening: August 21, 2024

			Affinity Chemical LLC		CHEMTRADE CHEMICALS US LLC		Carbon Activated Corp		Catalynt Solutions		Chameleon Industries		Chemrite, Inc.	
		Total Cost	$1,524,000.00		$2,002,000.00		$67,500.00		$59,750.00		$2,016,600.00		$601,650.00	
#	Items	Quantity Required	Unit Price	Total Cost	Unit Price	Total Cost	Unit Price	Total Cost	Unit Price	Total Cost	UnitPrice	Total Cost	Unit Price	Total Cost
#0-1	Chlorine to be delivered and unloaded FOB to the City of Midland Water Purification Plant located at 5000 N. Midland Drive OR the T-Bar Chlorination Station located at 4111 N FM 1788 with the freight prepaid and included in the bid	**722,000 lbs**	No Bid	No Bid	No Bid	No Bid	No Bid	No Bid	No Bid	No Bid	No Bid	No Bid	No Bid	No Bid
#0-2	Liquid Ammonium Sulfate to be delivered and unloaded FOB to the City of Midland Water Purification Plant located at 5000 N. Midland Drive with the freight prepaid and included in the bid (Quantity in gallons)	**400,000 gal**	No Bid	No Bid	$2.04	$816,000.00	No Bid	No Bid	No Bid	No Bid	$ 1.624	$ 649,600.0	No Bid	No Bid
#0-3	Aluminum Sulfate to be delivered and unloaded FOB to the City of Midland Water Purification Plant located at 5000 N. Midland Drive with the freight prepaid and included in the bid (Quantity in tons)	**2,000 tons**	$762	$ 1,524,000.0	$593	$1,186,000.00	No Bid	No Bid	No Bid	No Bid	$ 475	$950,000.00	No Bid	No Bid
#0-4	Polymer to be delivered and unloaded FOB to the City of Midland Water Purification Plant located at 5000 N. Midland Drive with the freight prepaid and included in the bid (quantity in gallons)	**20,000 gals**	No Bid	No Bid	No Bid	No Bid	No Bid	No Bid	No Bid	No Bid	$ 8.1	$162,000.00	No Bid	No Bid
#0-5	Powdered Activated Carbon in packages not to exceed 50 lbs. each to be delivered and unloaded FOB at 5000 North Midland Drive with freight prepaid and included in bid.(quantity in tons)	**25 tons**	No Bid	No Bid	No Bid	No Bid	$ 2,700.0	$67,500.00	No Bid	No Bid	No Bid	No Bid	$ 3,188.0	$ 79,700.0
#0-6	Liquid Copper Sulfate 25% to be delivered and unloaded FOB at 5000 North Midland Drive with freight prepaid and included in bid.(quantity in gallons)	**5,000 gal**	No Bid	No Bid	No Bid	No Bid	No Bid	No Bid	$ 11.95	$ 59,750.0	$ 17	$ 85,000.0	$ 8.93	$ 44,650.0
#0-7	Liquid Copper Sulfate Pentahydrate 19.8% Molluscicide to be delivered in 275 to 375- gallon totes and unloaded FOB at 5000 North Midland Drive with freight prepaid and included in bid.(quantity in gallons)	**10,000 gal**	No Bid	No Bid	No Bid	No Bid	No Bid	No Bid	No Bid	No Bid	$ 17	$170,000.00	$ 17.18	$ 171,800.0
#0-8	Sodium Permanganate – 20% Solution delivered in 275 gallon totes for treating drinking water to be delivered on a truck equipped with a lift gate and pallet jack unloaded FOB to the Water Purification Plant at 5000 North Midland Drive with freight prepaid and included in bid.(quantity in pounds)	**260,000 lbs**	No Bid	No Bid	No Bid	No Bid	No Bid	No Bid	No Bid	No Bid	No Bid	No Bid	$ 1.175	$ 305,500.0
#0-9	25% Sodium Hydroxide to be delivered and unloaded FOB to the City of Midland Water Purification Plant located at 5000 N. Midland Drive with the freight prepaid and included in the bid.(quantity in gallons)	**203,000 gal**	No Bid	No Bid	No Bid	No Bid	No Bid	No Bid	No Bid	No Bid	No Bid	No Bid	No Bid	No Bid

Bid Summary

65 Bid Requests were issued
12 Bids are listed above
0 NO BIDs were received
53 Bidders did not respond

25000006 Annual Chemical for the Water Purification Plant Bid Opening: August 21, 2024														
			Miko Services & Mak		PVS DX, Inc.		Pencco, Inc.		Polydyne Inc.		Shannon Chemical		Univar Solutions USA,	
		Total Cost	$5,199,600.00		$1,197,077.45		$ 616,000.0		$152,400.00		$394,650.00		$1,760,053.80	
#	Items	Quantity Required	Unit Price	Total Cost	Unit Price	Total Cost	Unit Price	Total Cost	Unit Price	Total Cost	Unit Price	Total Cost	Unit Price	Total Cost
#0-1	Chlorine to be delivered and unloaded FOB to the City of Midland Water Purification Plant located at 5000 N. Midland Drive OR the T-Bar Chlorination Station located at 4111 N FM 1788 with the freight prepaid and included in the bid	**722,000 lbs**	No Bid	No Bid	$1.22	$884,089.00	No Bid	No Bid	No Bid	No Bid	No Bid	No Bid	No Bid	No Bid
#0-2	Liquid Ammonium Sulfate to be delivered and unloaded FOB to the City of Midland Water Purification Plant located at 5000 N. Midland Drive with the freight prepaid and included in the bid (Quantity in gallons)	**400,000 gal**	No Bid	No Bid	No Bid	No Bid	$ 1.54	$616,000.00	No Bid	No Bid	No Bid	No Bid	No Bid	No Bid
#0-3	Aluminum Sulfate to be delivered and unloaded FOB to the City of Midland Water Purification Plant located at 5000 N. Midland Drive with the freight prepaid and included in the bid (Quantity in tons)	**2,000 tons**	$2,084.00	$4,168,000.00	No Bid	No Bid	No Bid	No Bid	No Bid	No Bid	No Bid	No Bid	$534.00	$1,068,000.00
#0-4	Polymer to be delivered and unloaded FOB to the City of Midland Water Purification Plant located at 5000 N. Midland Drive with the freight prepaid and included in the bid (quantity in gallons)	**20,000 gals**	No Bid	No Bid	No Bid	No Bid	No Bid	No Bid	$7.62	$152,400.00	No Bid	No Bid	No Bid	No Bid
#0-5	Powdered Activated Carbon in packages not to exceed 50 lbs. each to be delivered and unloaded FOB at 5000 North Midland Drive with freight prepaid and included in bid.(quantity in tons)	**25 tons**	No Bid	No Bid	No Bid	No Bid	No Bid	No Bid	No Bid	No Bid	No Bid	No Bid	No Bid	No Bid
#0-6	Liquid Copper Sulfate 25% to be delivered and unloaded FOB at 5000 North Midland Drive with freight prepaid and included in bid.(quantity in gallons)	**5,000 gal**	$8.75	$43,750.00	No Bid	No Bid	No Bid	No Bid	No Bid	No Bid	$12.37	$61,850.00	No Bid	No Bid
#0-7	Liquid Copper Sulfate Pentahydrate 19.8% Molluscicide to be delivered in 275 to 375- gallon totes and unloaded FOB at 5000 North Midland Drive with freight prepaid and included in bid.(quantity in gallons)	**10,000 gal**	No Bid	No Bid	No Bid	No Bid	No Bid	No Bid	No Bid	No Bid	No Bid	No Bid	No Bid	No Bid
#0-8	Sodium Permanganate – 20% Solution delivered in 275 gallon totes for treating drinking water to be delivered on a truck equipped with a lift gate and pallet jack unloaded FOB to the Water Purification Plant at 5000 North Midland Drive with freight prepaid and included in bid.(quantity in pounds)	**260,000 lbs**	$0.60	$156,750.00	No Bid	No Bid	No Bid	No Bid	No Bid	No Bid	$ 1.28	$332,800.00	$1.69	$439,400.00
#0-9	25% Sodium Hydroxide to be delivered and unloaded FOB to the City of Midland Water Purification Plant located at 5000 N. Midland Drive with the freight prepaid and included in the bid.(quantity in gallons)	**203,000 gal**	$4.09	$831,100.00	$1.54	$312,988.45	No Bid	No Bid	No Bid	No Bid	No Bid	No Bid	$1.24	$252,653.80

Bid Summary

65 Bid Requests were issued
12 Bids are listed above
0 NO BIDs were received
53 Bidders did not respond

City Council Meeting

Item Number: 12

Meeting Date: September 24, 2024

To: City Council / City Manager

From: Erika Martinez, Manager, Purchasing

Subject: RESOLUTION AWARDING A CONTRACT FOR THE PURCHASE AND INSTALLATION OF AN HVAC SYSTEM AT THE MARTIN LUTHER KING JR. COMMUNITY CENTER TO FIRST SERVICE AIR CONDITIONING, INC., FOR A COST OF $106,022.00; AND APPROVING $10,602.00 FOR CONTINGENCIES (DISTRICT 2) (GENERAL SERVICES) (STRENGTHEN AND SUSTAIN OUR INFRASTRUCTURE)

Purpose:

Resolution awarding a contract for the purchase and installation of new HVAC Units at the Martin Luther King, Jr. Community Center to First Service Air Conditioning, Inc. for a cost of $106,022.00 plus $10,602.00 in contingencies for a total of $116,624.00.

Recommended City Council Action:

Approve

Fiscal Impact:

Funding is available in the FY 2024 General Fund operating budget.

Strategic Priority:

(Strengthen and Sustain our Infrastructure)

Discussion:

City Manager's Office approved specifications and authorized advertisement for bids for the purchase and installation of new HVAC Units at the Martin Luther King, Jr. Community Center. Nineteen (19) requests for bids were issued. We received four (4) bids. Staff recommends awarding the bid to the apparent low bidder, First Service Air Conditioning, Inc. Please see

attached memo from Mark Garcia, Facilities Services Manager, for additional information.

Therefore, please consider a resolution awarding a contract for the purchase and installation of new HVAC Units at the Martin Luther King, Jr. Community Center to First Service Air Conditioning, Inc. for a cost of $106,022.00 plus $10,602.00 in contingencies for a total of $116,624.00.

Morris Williams Jr.

City Manager's Office

INTEROFFICE MEMORANDUM

TO: Regina Stephenson, General Services Director

FROM: Mark Garcia, Facilities Services Manager

SUBJECT: Request for Bids 24006307 for new HVAC Units for the Martin Luther King Jr. Community Center

DATE: September 12, 2024

Request for bids for the purchase and installation of new HVAC units at the Martin Luther King, Jr. Community Center were issued to nineteen (19) potential bidders. We received four (4) responsive bids. The current HVAC system has gone beyond its useful life and needs to be replaced. There are refrigerant leaks on some of the units and the parts are obsolete. Staff recommends awarding the contract to the apparent low bidder, First Service Air Conditioning, Inc.

Therefore, please consider a resolution awarding a contract for the purchase and installation of new HVAC units at the Martin Luther King, Jr. Community Center to First Service Air Conditioning, Inc. of Midland, Texas for a cost of $106,022.00 plus $10,602.00 in contingencies for a total of $116,624.00.

RESOLUTION NO. _____

RESOLUTION AWARDING A CONTRACT FOR THE PURCHASE AND INSTALLATION OF AN HVAC SYSTEM AT THE MARTIN LUTHER KING JR. COMMUNITY CENTER TO FIRST SERVICE AIR CONDITIONING, INC., FOR A COST OF $106,022.00; AND APPROVING $10,602.00 FOR CONTINGENCIES

WHEREAS, the City Manager's Office approved specifications and authorized the advertisement for competitive bids for the purchase and installation of an HVAC system at the Martin Luther King Jr. Community Center; and

WHEREAS, the City received four (4) bids that were opened on September 11, 2024, with the lowest bid being submitted by First Service Air Conditioning, Inc., as shown on the tabulation attached hereto as Exhibit A and incorporated herein for all purposes; and

WHEREAS, the City Council finds the amount proposed by First Service Air Conditioning, Inc., for the purchase and installation of said HVAC system to be fair and reasonable; and

WHEREAS, the City Council finds it to be in the public interest to award a contract to First Service Air Conditioning, Inc., for the purchase and installation of an HVAC system at the Martin Luther King Jr. Community Center; and

WHEREAS, the City Council finds it to be in the public interest to approve $10,602.00 for contingencies;

NOW, THEREFORE, BE IT RESOLVED BY THE CITY COUNCIL OF THE CITY OF MIDLAND, TEXAS:

SECTION ONE. That the City Manager and City Secretary are hereby authorized and directed to execute and attest, respectively, on behalf of the City of Midland, a contract with First Service Air Conditioning, Inc., for the purchase and installation of an HVAC system at the Martin Luther King Jr. Community Center for a cost of $106,022.00. Said contract to be kept on file in the office of the City Secretary, referenced by the date and number of this Resolution.

SECTION TWO. That the sum of $10,602.00 for contingencies is hereby approved.

SECTION THREE. That the City Comptroller is hereby authorized and directed to pay First Service Air Conditioning, Inc., pursuant to the terms of said contract from funds available in the FY 2024 General Fund operating budget upon receipt of proper invoices or statements approved by the City Manager.

On motion of Council member _____, seconded by Council member _____, the above and foregoing resolution was adopted by the City Council of the City of Midland at a regular meeting on the _____ day of _____, A.D., 2024, by the following vote:

Council members voting "AYE":

Council members voting "NAY":

_____
Lori Merritt Blong, Mayor

ATTEST:

_____
Marcia Bentley-German, City Secretary

RECOMMENDED AND APPROVED:

_____
Tommy Gonzalez, City Manager

APPROVED AS TO CONTENT
AND COMPLETENESS:

_____
Regina Stephenson, General Services Director

APPROVED AS TO FORM ONLY:

_____
John Ohnemiller, City Attorney

Bid Opening: September 11, 2024
24006307 HVAC for MLK Center

			EMS Heating and Air Conditioning		First Service A/C Contractors Inc.		JFA Construction, LLC		Mid-Tex of Midland, Inc.	
		Total Cost	$147,175.46		$106,022.00		$140,460.00		$213,695.00	
#	Items	Quantity Required	Unit Price	Total Cost	Unit Price	Total Cost	Unit Price	Total Cost	Unit Price	Total Cost
#0-1	Materials Portion Incorporataed in to Project	1	$73,587.73	$73,587.73	$77,322.00	$77,322.00	$100,660.00	$100,660.00	$70,000.00	$70,000.00
#0-2	Labor Portion Incorporated in to Project	1	$29,435.09	$29,435.09	$28,700.00	$28,700.00	$29,800.00	$29,800.00	$105,000.00	$105,000.00
#0-3	Other Costs not Incorporated In to Project	1	$44,152.64	$44,152.64	N/A	N/A	$10,000.00	$10,000.00	$38,695.00	$38,695.00

Bidding Summary
19 Bid Requests issued
0 No Bids were received
15 Biddrers did not respond

Exhibit A

Bid Opening: September 11, 2024
24006307 HVAC for MLK Center

			EMS Heating and Air Conditioning		First Service A/C Contractors Inc.		JFA Construction, LLC		Mid-Tex of Midland, Inc.	
		Total Cost	$147,175.46		$106,022.00		$140,460.00		$213,695.00	
#	Items	QuantityRequired	Unit Price	Total Cost	Unit Price	Total Cost	Unit Price	Total Cost	Unit Price	Total Cost
#0-1	Materials Portion Incorporataed in to Project	1	$73,587.73	$73,587.73	$77,322.00	$77,322.00	$100,660.00	$100,660.00	$70,000.00	$70,000.00
#0-2	Labor Portion Incorporated in to Project	1	$29,435.09	$29,435.09	$28,700.00	$28,700.00	$29,800.00	$29,800.00	$105,000.00	$105,000.00
#0-3	Other Costs not Incorporated In to Project	1	$44,152.64	$44,152.64	N/A	N/A	$10,000.00	$10,000.00	$38,695.00	$38,695.00

Bidding Summary
19 Bid Requests issued
0 No Bids were received
15 Biddrers did not respond

THE CITY OF MIDLAND

CONTRACT

Contract No.24006307

THIS CONTRACT, effective the 25 day of September, 2024, by and between the City of Midland, hereinafter referred to as "CITY", and First Service Air Conditioning Inc., hereinafter referred to as "COMPANY", is made for the following considerations:

1. **Cost:** Total Proposal: $ 106,022.00 DOLLARS

2. **Scope of Work:** COMPANY shall perform all work described and shall provide labor, materials, equipment and supervision necessary for the purchase and installation for a new HVAC Unit at the Martin Luther King Center. Said work being more particularly described in the following documents, which are attached hereto and incorporated herein for all purposes.

EXHIBIT A..... Specifications, Proposal or Cost Summary
EXHIBIT B.....Intentionally Omitted
EXHIBIT C..... Bonding instructions for Public Works Contract of $50,000 and more
EXHIBIT D..... Wage Scale

3. **City:** The words "CITY's Representative" or "representative" shall mean Regina Stephenson or the designee under whose supervision these contract documents, including the plans and specifications, were prepared, or who may inspect work performed under this Contract; or such other representative, supervisor, or inspector as may be authorized by CITY to act in any particular capacity under this Contract.

4. **City's Representative:** CITY's Representative may make periodic visits to the site to observe the progress and quality of the executed work and to determine, in general, if the work is proceeding in accordance with the contract documents. CITY's representative will not be required to make exhaustive or continuous on-site inspections to check the quality or quantity of the work, nor will such representative be responsible for the construction means, methods, techniques, sequences or procedures, or the safety precautions incident thereto. CITY's representative will not be responsible for COMPANY's failure to perform the work in accordance with the contract.

5. **Company:** Unless otherwise stipulated, COMPANY shall provide and pay for all materials,

supplies, machinery, equipment, tools, superintendence, labor, insurance, and all water, light, power, fuel, transportation and all other facilities necessary for the execution and completion of the work covered by the contract documents. Unless otherwise specified, all materials shall be new, and both workmanship and materials shall be of a good quality. COMPANY shall, if required, furnish satisfactory evidence as to the kind and quality of materials.

5.1. COMPANY shall, at its expense, obtain all permits and licenses necessary for the performance of this contract and pay all fees and taxes required by law, and comply with all laws, ordinances, rules and regulations governing COMPANY's performance of the contract, including all environmental laws and regulations, whether state or federal.

5.2. All work shall be done and all materials furnished in strict conformity with the contract and specifications.

6. **Minor Work Not Mentioned:** All minor detail of the work not specifically mentioned in the Specifications but obviously necessary for the proper completion of the work, such as the proper connection of new work to old, shall be considered as incidental to and a part of the work for which the prices are named in the contract. COMPANY will not be entitled to any additional compensation therefor unless specifically stated otherwise. Otherwise the term "extra work" as used in this contract shall mean and include all work that may be required by CITY to be done by COMPANY to accomplish any alteration or addition to the work as shown on the Specifications.

6.1. COMPANY shall perform all extra work under the direction of CITY's Representative when presented with a written work order signed by CITY's Representative, subject, however, to the right of the COMPANY to require written confirmation of such extra work order by CITY. Payment for extra work shall be as agreed in the work order.

7. **Safety:** COMPANY shall at all times exercise reasonable precaution for the safety of employees and others on or near the work and shall comply with all applicable provisions of federal, state and municipal laws. All machinery and equipment and other physical hazards shall be guarded in accordance with federal, state or municipal laws or regulations.

8. **INDEMNITY: COMPANY SHALL INDEMNIFY AND HOLD HARMLESS AND DEFEND CITY AND ALL OF CITY'S OFFICERS, AGENTS AND EMPLOYEES FROM ALL SUITS, ACTIONS, CLAIMS, DAMAGES, PERSONAL INJURIES, ACCIDENTAL DEATH, LOSSES, PROPERTY DAMAGE AND EXPENSES OF ANY CHARACTER WHATSOEVER, INCLUDING ATTORNEY'S FEES, BROUGHT FOR OR ON ACCOUNT OF ANY INJURIES**

OR DAMAGES RECEIVED OR SUSTAINED BY ANY PERSON OR PERSONS OR PROPERTY, ON ACCOUNT OF ANY NEGLIGENT ACT OF COMPANY, THEIR AGENTS OR EMPLOYEES, OR ANY SUBCONTRACTOR, IN THE EXECUTION, SUPERVISION AND OPERATIONS GROWING OUT OF OR IN ANY WAY CONNECTED WITH THE PERFORMANCE OF THIS CONTRACT, AND COMPANY WILL BE REQUIRED TO PAY ANY JUDGMENT WITH COSTS WHICH MAY BE OBTAINED AGAINST CITY OR ANY OF ITS OFFICERS, AGENTS OR EMPLOYEES, INCLUDING ATTORNEY'S FEES. THE OBLIGATIONS CONTAINED IN THIS SECTION 8 SHALL SURVIVE THE TERMINATION OF THIS CONTRACT.

8.1. **COMPANY SHALL INDEMNIFY AND HOLD HARMLESS AND DEFEND CITY AND ALL OF CITY'S OFFICERS, AGENTS AND EMPLOYEES FROM ALL SUITS, ACTIONS, CLAIMS, DAMAGES, PERSONAL INJURIES, ACCIDENTAL DEATH, PROPERTY DAMAGE, LOSSES, AND EXPENSES OF ANY CHARACTER WHATSOEVER INCLUDING ATTORNEY'S FEES, BROUGHT FOR OR ON ACCOUNT OF ANY INJURIES OR DAMAGES RECEIVED OR SUSTAINED BY ANY PERSON OR PERSONS OR PROPERTY, ON ACCOUNT OF ANY NEGLIGENT ACT OF CITY, CITY'S OFFICERS, AGENTS AND EMPLOYEES, WHETHER SUCH NEGLIGENT ACT WAS THE SOLE PROXIMATE CAUSE OF THE INJURY OR DAMAGE OR A PROXIMATE CAUSE JOINTLY AND CONCURRENTLY WITH COMPANY OR COMPANY'S EMPLOYEES, AGENTS OR SUBCONTRACTORS NEGLIGENCE IN THE EXECUTION, SUPERVISION AND OPERATIONS GROWING OUT OF OR IN ANY WAY CONNECTED WITH THE PERFORMANCE OF THIS CONTRACT, AND COMPANY WILL BE REQUIRED TO PAY ANY JUDGMENT WITH COSTS WHICH MAY BE OBTAINED AGAINST CITY OR ANY OF ITS OFFICERS, AGENTS OR EMPLOYEES, INCLUDING ATTORNEY'S FEES. THE OBLIGATIONS CONTAINED IN THIS SECTION 8.1 SHALL SURVIVE THE TERMINATION OF THIS CONTRACT.**

8.2. **COMPANY AGREES THAT IT WILL INDEMNIFY AND SAVE CITY HARMLESS FROM ALL CLAIMS GROWING OUT OF ANY DEMANDS OF SUBCONTRACTORS, LABORERS, WORKMEN, MECHANICS, MATERIALMEN, AND FURNISHERS OF MACHINERY AND PARTS THEREOF, EQUIPMENT, POWER TOOLS AND ALL SUPPLIES, INCURRED IN THE FURTHERANCE OF THE PERFORMANCE OF THIS CONTRACT. WHEN CITY SO DESIRES, COMPANY SHALL FURNISH SATISFACTORY EVIDENCE THAT ALL OBLIGATIONS OF THE NATURE HEREINABOVE DESIGNATED HAVE BEEN PAID, DISCHARGED OR WAIVED. COMPANY, ITS SURETIES AND**

INSURANCE CARRIERS SHALL DEFEND, INDEMNIFY AND SAVE HARMLESS CITY AND ALL OF ITS OFFICERS, AGENTS AND EMPLOYEES FROM ALL SUITS, ACTIONS, OR CLAIMS OF ANY CHARACTER WHATSOEVER, BROUGHT FOR OR ON ACCOUNT OF ANY INJURIES OR DAMAGES RECEIVED OR SUSTAINED BY ANY PERSON OR PERSONS OR PROPERTY, ARISING FROM ANY ACT OF COMPANY OR ANY SUBCONTRACTOR, THEIR AGENTS OR EMPLOYEES, IN THE EXECUTION AND SUPERVISION OF THIS CONTRACT, AND WILL BE REQUIRED TO PAY ANY JUDGMENT WITH COSTS WHICH MAY BE OBTAINED AGAINST CITY OR ANY OF ITS OFFICERS, AGENTS, OR EMPLOYEES INCLUDING ATTORNEY'S FEES. THE OBLIGATIONS CONTAINED IN THIS SECTION 8.2 SHALL SURVIVE THE TERMINATION OF THIS CONTRACT.

9. **Start of Work:** COMPANY shall commence work no later than ten (10) days after receipt of the execution of this document or other written release to proceed and shall complete such work no later than 30 calendar days after release to proceed.

10. **Clean Up:** COMPANY shall promptly remove from CITY's premises all materials condemned by CITY's Representative on account of failure to conform to the contract, whether actually incorporated in the work or not, and COMPANY shall at its own expense promptly replace such condemned materials with other materials conforming to the requirements of the contract. COMPANY shall also bear the expense of restoring all work of other contractors damaged by any such removal or replacement. If COMPANY does not remove and replace any such condemned materials within a reasonable time after a written notice by CITY, CITY may remove and replace such at COMPANY's expense.

11. **Warranty:** Neither the final payment nor any provision in this contract shall relieve COMPANY of responsibility for faulty materials or workmanship, and he shall remedy any defects due thereto and pay for any damage to other work resulting therefrom, which shall appear within a period of one (1) year from the date of substantial completion. CITY shall give notice of observed defects with reasonable promptness.

12. **Remedy:** CITY may, on account of subsequently discovered evidence, withhold whole or part of any payment to such extent as may be necessary to protect itself from loss on account of:

12.1. Defective work not remedied; or

12.2. Claims filed or reasonable evidence indicating possible filing of claims; or

12.3. Failure of COMPANY to make payments promptly to subcontractors or for material or labor which CITY may pay as an agent for the COMPANY; or

12.4. Damages to another contractor or subcontractor.

When the above grounds to withhold payment are removed, or COMPANY provides a surety bond satisfactory to CITY, which will protect CITY in the amount withheld, payment may be released.

13. **Funding Out:** In the event no funds or insufficient funds are appropriated and budgeted or are otherwise unavailable in any fiscal period for contract payments due under the contract, then this contract shall terminate on the last day of the fiscal period for which full appropriations were made, without penalty or expense to CITY of any kind whatsoever.

14. **Wage Scale:** COMPANY agrees to pay all workmen in his employ no less than the generally prevailing wage rate for employees of similar category in the Permian Basin Area, as is depicted in the wage rate scale attached hereto as EXHIBIT D, and incorporated herein by reference for all legal purposes.

14.1. If applicable, the Davis-Bacon Act, 29 CFR 5.5, and any related acts or regulations are hereby incorporated by reference and made a part of this Contract, and all terms and requirements under said laws, by such incorporation, are made terms and requirements of this Contract, to which the parties to this Contract have agreed to be bound.

15. **Prompt Pay Act:** CITY and COMPANY agree that Texas Government Code, Chapter 2251, Payment for Goods and Services (the "Prompt Pay Act") does not waive governmental immunity.

16. **Payment:** After all work is completed by COMPANY, including all Change Orders altering the original scope and amount of said contract are completed, and CITY has inspected and approved that the work is completed and in compliance with the contract and all subsequent Change Orders, CITY shall thereafter issue payment to COMPANY in the amount of the contract and all Change Orders. CITY shall be the final judge of when the work is completed by COMPANY. CITY, in its sole discretion, shall determine if the work under the contract and under any Change Orders has been done to CITY's requirements. CITY may make periodic payments to COMPANY, however such periodic payments may only be made pursuant to this paragraph, and only after all work and all Change Orders are completed by COMPANY and approved by CITY. For contracts exceeding $25,000 and construction time exceeds ninety days, requests for progress payments may be made to the extent of the materials and labor completed at the end of each month. Upon approval by the Owner's Representative the request and invoice shall be forwarded for payment less 5% retainage. The total of these payments shall not exceed 95% of the total contract amount.

17. **No Third-Party Beneficiary:** CITY's approval of this contract does not create a third-party beneficiary. There is no third-party beneficiary to this contract. No person or entity who is not a party to

this contract shall have any third-party beneficiary or other rights hereunder.

18. WAIVER OF ATTORNEY FEES: BY EXECUTING THIS CONTRACT, COMPANY AGREES TO WAIVE AND DOES HEREBY KNOWINGLY, CONCLUSIVELY, VOLUNTARILY AND INTENTIONALLY WAIVE ANY CLAIM IT HAS OR MAY HAVE IN THE FUTURE AGAINST CITY REGARDING THE AWARD OR ATTORNEY'S FEES, WHICH ARE IN ANY WAY RELATED TO THIS CONTRACT, OR THE CONSTRUCTION, INTERPRETATION OR BREACH OF THIS CONTRACT. COMPANY SPECIFICALLY AGREES THAT IF COMPANY BRINGS OR COMMENCES ANY LEGAL ACTION OR PROCEEDING RELATED TO THIS CONTRACT, THE CONSTRUCTION, INTERPRETATION, VALIDITY OR BREACH OF THIS CONTRACT, INCLUDING, BUT NOT LIMITED TO, ANY ACTION PURSUANT TO THE PROVISIONS OF THE TEXAS UNIFORM DECLARATORY JUDGMENTS ACT (TEXAS CIVIL PRACTICE AND REMEDIES CODE SECTION 37.001, ET SEQ., AS AMENDED), OR CHAPTER 271 OF THE TEXAS LOCAL GOVERNMENT CODE, COMPANY AGREES TO ABANDON, WAIVE AND RELINQUISH ANY AND ALL RIGHTS TO THE RECOVERY OF ATTORNEY'S FEES TO WHICH COMPANY MIGHT OTHERWISE BE ENTITLED.

COMPANY AGREES THAT THIS IS THE VOLUNTARY AND INTENTIONAL RELINQUISHMENT AND ABANDONMENT OF A PRESENTLY-EXISTING KNOWN RIGHT. COMPANY ACKNOWLEDGES THAT IT UNDERSTANDS ALL TERMS AND CONDITIONS OF THIS CONTRACT. COMPANY FURTHER ACKNOWLEDGES AND AGREES THAT THERE WAS AND IS NO DISPARITY OF BARGAINING POWER BETWEEN CITY AND COMPANY. THIS SECTION SHALL NOT BE CONSTRUED OR INTERPRETED AS A WAIVER OR GOVERNMENTAL IMMUNITY AND SHALL SURVIVE THE TERMINATION OF THIS CONTRACT.

COMPANY IS RELYING ON ITS OWN JUDGMENT. COMPANY HAD THE OPPORTUNITY TO DISCUSS THIS CONTRACT WITH COMPETENT LEGAL COUNSEL PRIOR TO ITS EXECUTION. THE OBLIGATIONS CONTAINED IN THIS SECTION 18 SHALL SURVIVE THE TERMINATION OF THIS CONTRACT.

19. **Governmental Immunity:** By executing this contract CITY is not waiving its right of governmental immunity. CITY is retaining its immunity from suit. CITY is not granting consent to be sued by legislative resolution or action.

THERE IS NO WAIVER OF GOVERNMENTAL IMMUNITY.

20. **Insurance:**

COMPANY shall at all times during the term of this Contract maintain and keep in full force and effect insurance in the following types and minimum amounts with companies authorized to do business in the State of Texas:

Commercial General Liability (including Contractual liability):	
-Personal Injury:	$1,000,000.00 per person
	$1,000,000.00 per occurrence
-Property Damage:	$500,000.00 per occurrence
Business Automobile Liability:	$250,000.00 combined single limit - Personal Injury and Property Damage
Workers' Compensation:	Statutory limits
Employers' Liability:	$500,000.00 per accident or occurrence

The Commercial General Liability shall be on a per project aggregate, including completed operations, and shall be on a claims-occurred basis. This insurance shall name CITY as an additional insured and waive subrogation in favor of CITY.

The Business Automobile Liability insurance provided by COMPANY shall cover any auto for bodily injury and property damage, including owned vehicles, hired and non-city vehicles, and employee non-ownership, and the amount of such policy shall be a minimum of $250,000.00 covering any vehicle used for the execution of the work that is the subject of this Contract. This insurance shall name CITY as an additional insured and waive subrogation in favor of CITY.

The Workers' Compensation coverage provided by COMPANY shall inure to the benefit of employees injured during the course and scope of their employment by COMPANY pursuant to this Contract. The Workers' Compensation shall waive all rights of subrogation in favor of CITY.

All insurance required pursuant to this Contract shall provide for a waiver of subrogation in favor of CITY. All insurance required pursuant to this Contract, except for Workers' Compensation Insurance, shall name CITY as an additional insured on a claims occurred basis. CITY shall be provided the notice by COMPANY's insurance provider not later than thirty (30) days prior to any reduction or termination of such coverage.

COMPANY shall contractually require all contractors, subcontractors, and sub-subcontractors that work on any portion of the work that is the subject of this Contract to obtain insurance coverage that meets or exceeds the policy requirements and minimum amounts specified herein. All contractors, subcontractors, and sub-subcontractors shall obtain insurance policies that provide blanket waivers of subrogation in favor of the City of Midland and policies that name the City of Midland as an additional insured on a claims occurred basis (except workers' compensation).

The parties agree that, prior to the execution of the Contract, COMPANY shall provide one or more certificates of insurance specifically stating that these requirements have been met and subject to the approval of CITY. CITY shall not be required to provide any insurance whatsoever pursuant to this Contract.

COMPANY certifies that the certificate of insurance provided as required herein complies with the requirements of Chapter 1811 of the Texas Insurance Code. COMPANY shall not use an unapproved certificate of insurance or insert inappropriate language on a certificate. Compliance with state law is the sole responsibility of COMPANY.

21. **Assignment**: COMPANY shall not, either directly or indirectly, assign all or any part of this Contract or any interest, right or privilege herein, without the prior written consent of CITY. The issue on whether or not to grant consent to an assignment is in the sole discretion of CITY.

22. **RELEASE: NOTWITHSTANDING ANY OTHER PROVISION CONTAINED HEREIN, COMPANY HEREBY RELEASES, ACQUITS, RELINQUISHES AND FOREVER DISCHARGES CITY AND CITY'S COUNCIL MEMBERS, EMPLOYEES, AND OFFICERS FROM ANY AND ALL DEMANDS, CLAIMS, DAMAGES OR CAUSES OF ACTION OF ANY KIND WHATSOEVER THAT COMPANY HAS OR MIGHT HAVE IN THE FUTURE, INCLUDING, BUT NOT LIMITED TO, BREACH OF CONTRACT, QUANTUM MERUIT, CLAIMS UNDER THE DUE PROCESS AND TAKINGS CLAUSES OF THE TEXAS AND UNITED STATES CONSTITUTIONS, TORT CLAIMS, OR CITY'S NEGLIGENCE. THE OBLIGATIONS CONTAINED IN THIS SECTION SHALL SURVIVE THE TERMINATION OF THIS CONTRACT**.

23. **Governing Law and Venue:** This contract shall be governed by the laws of the State of Texas. All performance and payment made pursuant to this contract shall be deemed to have occurred in Midland County, Texas. The obligations and undertakings of each of the parties to this Agreement shall be deemed to have occurred in Midland County, Texas. Exclusive venue for any claims, suits or any other action arising from or connected in any way to this contract or the performance of this contract shall be in Midland County, Texas.

24. **Independent Contractor:** COMPANY shall perform all work and services described herein as an independent contractor and not as an officer, agent, servant, or employee of CITY. COMPANY shall have exclusive control of, and the exclusive right to control the details of the services and work to be performed hereunder, and all persons performing the same. COMPANY shall be solely responsible for the acts and omissions of its officers, agents, employees, contractors and subcontractors and the doctrine

of respondeat superior shall not apply as between CITY and COMPANY, its officers, agents, employees, contractors and subcontractors. Nothing in this Contract shall be construed as creating a partnership or joint enterprise between CITY and COMPANY. No person performing any of the work and services described hereunder by COMPANY shall be considered an officer, agent, servant or employee of CITY. Further, it is specifically understood and agreed that nothing in this contract is intended or construed as creating a "Community of Pecuniary Interest" or an "Equal Right of Control" which would give rise to vicarious liability.

COMPANY shall be an independent contractor under this Contract and shall assume all of the rights, obligations and liabilities, applicable to it as such independent contractor hereunder. CITY does not have the power to direct the order in which the work is done. CITY shall not have the right to control the means, methods or details of COMPANY's work. COMPANY shall assume exclusive responsibility for the work. COMPANY is entirely free to do the work in its own way.

25. **Notice of Alleged Breach; Statutory Prerequisites:** As a condition precedent to filing suit for alleged damages incurred by an alleged breach of an express or implied provision of this Contract, COMPANY or its legal representative, shall give the City Manager, or any other reasonable official of CITY, notice in writing (consisting of one (1) original and seven (7) copies of notice attached to a copy of this Contract) of such damages, duly verified, within one hundred twenty (120) days after the same has been sustained. The discovery rule does not apply to the giving of this notice. The notice shall include when, where and how the damages occurred, the apparent extent thereof, the amount of damages sustained, the amount for which COMPANY shall settle, the physical and mailing addresses of COMPANY at the time and date the claim was presented and the physical and mailing addresses of COMPANY for the six (6) months immediately preceding the occurrence of such damages, and the names and addresses of the witnesses upon whom COMPANY relies to establish its claim; and a failure to provide such written notification within the time and manner provided herein shall exonerate, excuse and except CITY from any liability whatsoever. CITY is under no obligation to provide notice to COMPANY that COMPANY's notice is insufficient. CITY reserves the right to request additional information regarding the claim. Said additional information shall be supplied within thirty (30) days after receipt of notice.

The statutory prerequisites outlined herein constitute jurisdictional requirements pursuant to Section 271.154 of the Texas Local Government Code and Section 311.034 of the Texas Government Code. Notwithstanding any other provision to the contrary, COMPANY's failure to comply with the requirements of this Section shall perpetually bar COMPANY's claim for damages under Chapter 271 of the Texas Local Government Code, and Section 311.034 of the Texas Government Code, regardless if

CITY has actual or constructive notice or knowledge of said claim or alleged damages. COMPANY agrees that the requirements of this entire Contract are reasonable. The provisions and obligations of this Section shall survive the termination of this Contract.

26. **Consideration:** The terms of this Contract are supported by good and valuable consideration, the receipt and sufficiency of which is hereby acknowledged by the parties named herein.

27. **Termination At Will:** CITY may terminate this Contract at will for no or any reason upon giving at least one hundred eighty (180) days written notice to COMPANY. The parties to this Contract understand and agree that it is in CITY's sole discretion to cancel the Contract during the term of the Contract without penalty to CITY. COMPANY has no expectation and has received no guarantees that this Contract will not be terminated before the end of the Contract term. The parties have bargained for the flexibility of terminating this Contract upon tender of the requisite notice at any time during the term of the Contract. All work and services under the Contract shall be suspended upon termination of the Contract becoming effective.

28. **Compliance:** COMPANY agrees that it shall comply with Texas Government Code Section 2252.908, *et seq.*, as amended. COMPANY agrees that it shall comply with Texas Local Government Code Section 176.006, *et seq.*, as amended.

29. To the extent that Sections 2271.002 and 2274.002, and 2276.002 of the Texas Government Code (collectively, the "Anti-Boycott Statutes") apply to this Contract, Company hereby verifies:

- that Company does not boycott Israel and will not boycott Israel during the term of this Contract;
- that Company does not boycott energy companies and will not boycott energy companies during the term of this Contract; and
- that Company does not have a practice, policy, guidance, or directive that discriminates against a firearm entity or firearm trade association and will not discriminate during the term of this Contract against a firearm entity or firearm trade association.

To the extent that the Anti-Boycott Statutes do not apply to this Contract, such verification is not required, and Company shall be deemed to have not made such verification.

30. **Records Retention and Production of Information.** To the extent that this Contract constitutes a contract described by Section 552.371 of the Texas Government Code, COMPANY shall: (i) preserve all contracting information related to this Contract as provided by the records retention requirements applicable to CITY for the duration of this Contract; (ii) promptly provide to CITY any contracting information related to the Contract that is in the custody or possession of COMPANY on request of CITY;

and (iii) on completion of the Contract, either: (a) provide at no cost to CITY all contracting information related to the Contract that is in the custody or possession of COMPANY; or (b) preserve the contracting information related to the Contract as provided by the records retention requirements applicable to CITY.

31. **Public Information.** To the extent that this Contract is a contract described by Section 552.371 of the Texas Government Code, COMPANY agrees as follows in accordance with Section 552.372(b) of the Texas Government Code: The requirements of Subchapter J, Chapter 552, Government Code, may apply to this Contract, and COMPANY agrees that the contract can be terminated if COMPANY knowingly or intentionally fails to comply with a requirement of that subchapter.

32. **Conflict of Terms.** If a conflict of terms or language exists between: (i) any of the provisions of this Contract and (ii) any of the provisions contained in any exhibit(s) attached to this Contract, precedence shall be given to the provisions of this Contract. For the avoidance of any doubt, the provisions contained in this Contract shall supersede any and all conflicting provisions contained in any exhibit(s) attached hereto. Furthermore, the parties acknowledge and agree that any provision contained in an exhibit(s) attached to this Contract that imposes an additional express or implied obligation on CITY is hereby made void and of no force or effect. CITY's sole and exclusive obligations under this Contract are contained in the provisions of this Contract that precede the signature page(s), which evidences the parties' execution.

33. Company agrees that all iron or steel products produced through a manufacturing process and used in the project that is the subject of this Contract shall be produced in the United States in accordance with Government Code § 2252.202, et seq., as amended.

EXECUTED IN DUPLICATE the day and year first above mentioned.

THE CITY OF MIDLAND, TEXAS

By: _____
Tommy Gonzalez, City Manager

ATTEST

_____
Marcia Bentley-German, City Governance Officer/City Secretary

APPROVED ONLY AS TO FORM

_____
John Ohnemiller, City Attorney

COMPANY:

By: _____

Name:_____

Title: _____

STATE OF _____ §
§
COUNTY OF_____ §

BEFORE ME, the undersigned authority, on this ____ day of _____, 20____ personally appeared, _____, an officer of First Service Air Conditioning Inc, known to me to be the person and official whose name is subscribed to the forgoing instrument, and acknowledged to me that he executed the same as the act and deed of said corporation, for the purposes and consideration therein expressed, and in the capacity therein stated.

GIVEN UNDER MY HAND AND SEAL OF OFFICE this the ____day of _____, 20____.

_____
Notary Public, State of _____

Exhibit A

Date: 08/01/2024

MIDLAND
Purchasing Division

300 NORTH LORAINE
P. O. BOX 1152
MIDLAND, TX 79702

BID NO: 24006307

CLOSING DATE: **CLOSING TIME: 3:00PM**

September 11, 2024

BIDS WILL BE RECEIVED UNTIL **3:00 PM** on **9/11/2024** THROUGH BONFIRE FOR GOODS AND SERVICES DESCRIBED BELOW WHICH WILL BE DELIVERED TO: **Martin Luther King Center**

DESCRIPTION
The City of Midland is seeking to contract for the purchase and installation of a new HVAC Unit at the MLK Center.
TOTAL $106,022.00

NOTICE TO BIDDERS:

1. FAILURE TO RESPOND WITH EITHER A BID OR "NO BID" WILL SUBJECT YOUR FIRM TO REMOVAL FROM THE BID LIST FOR THIS TYPE OF MATERIAL, EQUIPMENT OR SUPPLY ITEM.
2. IF THE SELECTED BIDDER/CONTRACTOR CANNOT MEET THE REQUIREMENTS OF CONTRACT, THEN THE CITY RESERVES THE RIGHT TO AWARD THIS PURCHASE TO ANOTHER BIDDER.
3. IMPORTANT NOTICE: IF THE CONTRACT DOCUMENTS REQUIRE WORKER'S COMPENSATION INSURANCE, BIDDER/CONTRACTOR MUST CARRY WORKER'S COMPENSATION INSURANCE TO BE ELIGIBLE FOR THIS CONTRACT. IF YOU CANNOT PROVIDE WORKER'S COMPENSATION INSURANCE AS REQUIRED BY STATE OF TEXAS STATUTE, WE RESPECTFULLY REQUEST THAT YOU "NO BID" THIS WORK.
4. BIDDER/CONTRACTOR/COMPANY IS RESPONSIBLE FOR ACQUIRING AND ACKNOWLEDGING ALL ADDENDA.
5. **PUBLIC INFORMATION:** To the extent that Bidder is submitting a bid for a contract described by Section 552.371 of the Texas Government Code, Bidder agrees as follows in accordance with Section 552.372(b) of the Texas Government Code: The requirements of Subchapter J, Chapter 552, Government Code, may apply to this bid, and the contractor or vendor agrees that the contract can be terminated if the contractor or vendor knowingly or intentionally fails to comply with a requirement of that subchapter

FOR ADDITIONAL INFORMATION, CONTACT (432) 685-7234 OR EMAIL PURCHASING@MIDLANDTEXAS.GOV

NOTE: EACH BIDDER IS TO INDICATE BRAND NAME PRODUCT NUMBER AND ATTACH DESCRIPTIVE LITERATURE CLEARLY MARKED TO SHOW EACH ITEM ON THIS BID.THE UNDERSIGNED HEREBY OFFERS TO FURNISH AND DELIVER THE ARTICLES OR SERVICE AS SPECIFIED ABOVE AT THE PRICES AND TERMS HEREIN STATED AND IN STRICT ACCORDANCE WITH THE SPECIFICATIONS AND CONDITIONS OF BIDDING ALL WHICH ARE MADE A PART OF THIS OFFER. THIS OFFER IS NOT SUBJECT TO WITHDRAWAL WITHOUT PERMISSION.

COMPANY NAME: First Service Plumbing Heating Air Conditioning
ADDRESS: 3009 Garden City Hwy
CITY: Midland STATE: Texas ZIP 79701
PHONE NO: 432 685-0003 EMAIL: _____
DELIVERY CAN BE MADE: _____
AUTHORIZED SIGNATURE: _____

A Message for Our Vendors

The City of Midland, Texas has developed a strategic plan with long-term objectives, new mission and vision statements, and a course of action to carry out goals established by and for our community. This includes strategic priorities that will address our economy, infrastructure, quality of life, standards for a safe and secure city, plus much more that's detailed below. We hope you join us on this exciting journey and to be part of the energy toward a successful and prosperous Midland!

Vision Statement

The City of Midland will be the premier and safest city in West Texas by providing world-class municipal services through operational excellence and a culture of innovation.

Mission Statement

Deliver exceptional services and promote a high quality of life and place for ALL our citizens.

Guiding Principles: I-FORCE

Integrity
Financial Stewardship
Outstanding Service
Respect
Collaboration
Excellence

City Council Key Focus Areas

Communication • Customer Service
Economic Development
Fiscal Responsibility & Accountability
High-Performing City Team • Legislation
Quality of Place • Technology Improvements

Core Values

Commitment: Duty to the public good.
Engagement: Foster partnerships and collaboration.
Excellence: Practice continuous improvement.
Innovation: Embrace creativity and cutting-edge solutions.
Integrity: Operate with transparency and accountability.
Inclusivity: Ensure all voices are heard and valued.

Strategic Goals

1. **Strong Economy with More Quality Jobs**
   - 1.1 Increase the Midland Sales Tax Base: Develop strategies to expand the tax base by attracting businesses and supporting local commerce.
   - 1.2 Enhance Visitor Revenue Opportunities: Boost tourism through marketing and infrastructure improvements.
   - 1.3 Continue Downtown and West Midland Redevelopment: Promote revitalization efforts for a vibrant downtown.
   - 1.4 Nurture Development Districts: Establish key action plans honed to enhance Development Districts.
   - 1.5 Grow the Core Business of Air Transportation: Develop and transform the Midland airport system.
   - 1.6 Diversify Midland's Economy: Support initiatives that diversify the local economy and enhance resilience.
   - 1.7 Expand Opportunities and Programming for General and Small Business: Foster the growth, retention, and expansion of local small businesses as well as business in general.
   - 1.8 Improve Speed to Market for Citizens, Builders, Developers, and Contractors: Reduce wait times for permit review/approval and inspection process of permitted work.
   - 1.9 Establish Community as a Premier Destination for Retail and Entertainment: Offer unique, compelling experiences that draw visitors, ultimately driving economic growth and community vibrancy, while increasing tourism and business development.

2. Set the Standard for a safe and secure City

2.1 Enhance public safety programs.
2.2 Improve Pedestrian and Motorist Safety: Invest in traffic management and infrastructure.
2.3 Implement Effective Code Enforcement Strategies: Address nuisances to improve overall health and safety.
2.4 Revitalize Neighborhoods: Utilize best practices to support the redevelopment of neighborhoods.
2.5 Enhance Animal Services: Ensure the welfare of pets and wildlife in the city.
2.6 Grow and Retain Public Safety Resources: Expand law enforcement presence as well as fire reduction and prevention programs while reducing attrition.

3. Quality of Life and Place

3.1 Enhance Community Engagement: Champion innovative recreational, educational, and cultural programs that enrich residents' lives in partnership with the business community.
3.2 Foster Relationships with Foundations and Outside Businesses: Collaborate to create world-class facilities and amenities.
3.3 Create an Attractive and Inclusive Living Environment: Develop and enhance live, work, and play opportunities for our citizens.
3.4 Establish Beautification Programs: Implement initiatives to make the community clean and bright.
3.5 Nurture and Promote a Healthy Community: Increase healthy community living and education opportunities for citizens of all ages.
3.6 Build the Best Parks System in Our Region: Offer diverse, accessible, and enjoyable green spaces, tournament-ready ball fields, safe playgrounds, and unique recreational opportunities that enhance the quality of life/quality of place for our community.

4. Transparent and Consistent Communication

4.1 Set a Climate of Respect, Collaboration, and Team Spirit: Cultivate a culture of openness and respect.
4.2 Enhance Communication Efficiency and Effectiveness: Leverage and expand the use of technology to facilitate the exchange of information.
4.3 Elevate Internal Communication and Employee Engagement: Strengthen information flow and collaboration among city staff.
4.4 Advance Two-Way Communication of Key Messages: Engage effectively with external stakeholders; foster community engagement.
4.5 Strengthen Messaging Opportunities Through Various Media Outlets: Communicate the city's achievements and initiatives.

5. Provide Sound Governance and Fiscal Management

5.1 Recruit and Retain a Skilled and Diverse Workforce: Invest in talent and diversity; grow our local pipeline of skilled employees.
5.2 Enhance Citizen Experience: Improve employee working conditions to better serve citizens.
5.3 Hone Public Servant Proficiency: Cultivate a culture of professional growth, skilled mastery, and information exchange.
5.4 Implement Cutting-Edge Practices: Harness automation and Artificial Intelligence technology for efficient resource utilization.
5.5 Promote a Well-Balanced Customer Service Philosophy: Consistently deliver excellent service to residents.
5.6 Deliver Services Timely and Efficiently: Prioritize continuous improvement.
5.7 Ensure Continued Financial Stability and Accountability: Maintain financial transparency.
5.8 Deliver Effective and Efficient Processes: Maximize value in procurement.
5.9 Ensure Reliability and Safety: Maintain existing assets and develop new city asset opportunities, including parks and other facilities, with a standard of excellence.
5.10 Create a Work Environment that Supports Bleeding-Edge Practices: Encourage bleeding-edge practice that then cultivates an environment where employees can learn from their experiences and improve processes; thus, becoming a learning organization.

6. Strengthen and Sustain Our Infrastructure

6.1 Provide Reliable and Sustainable Utilities: Guarantee water supply and distribution systems security and longevity.
6.2 Enhance Infrastructure for Economic Growth: Improve competitiveness through infrastructure investments that includes collaboration with neighboring jurisdictions and exemplary peer agencies.
6.3 Streamline and Consolidate City Facilities: Create synergy for improved services.
6.4Standardize Infrastructure Processes Across the City: Ensure consistency, timeliness, and accountability in infrastructure development.
6.5 Implement a Funding Stream for Infrastructure: Establish reliable funding for continual improvements.
6.6 Strategize for and Monitor City Growth: Develop proactive responses to growth pattern changes.
6.7 Develop and Implement Comprehensive Road Planning and Maintenance Initiatives: Ensure safe and maintained roads for existing and new developing areas and main thoroughfares.

THE CITY OF MIDLAND

SPECIFICATION

24006307 HVAC for MLK Center

1. VENDOR CONTACT:

All potential vendors shall direct ALL questions, areas for bid clarification and specification verification to the Purchasing Manager IN WRITING, via mail, Bonfire as follows:

The City Of Midland
Office of the Purchasing Agent
P.O. Box 1152
Midland, TX 79702

OR

FAX: (432) 685-0523
Email: purchasing@midlandtexas.gov

All vendors on the bid list will then be notified of the questions and presented with an answer. Information provided by other City of Midland, TX personnel shall not be considered binding.

2. DEFINITIONS

2.1. OWNER

City of Midland

2.2. CONTRACTOR

Successful Bidder

3. REQUIREMENTS

Vendor shall comment in the right margin as to whether or not his bid meets or exceeds the minimum specification shown. Please explain how it exceeds or falls short of the requirement. Use blue or Black ink if completed by hand. A separate sheet may be used as long as each item is identified, and the sheet(s) are signed.

	Vendor Comment
3.1. GENERAL	
3.1.2 The intent of this specification is to establish minimum standards for equipment to be purchased by City of Midland, Texas. This specification is intended to describe a new production model. The design is to be such that no additional modification or fabrication is required.	Meets
3.1.3. The City of Midland reserves the right to reject any or all bids and to waive all formalities and to award the purchase to the bidder on all or none basis.	Meets
3.1.4. The City of Midland reserves the right to award the bid based on what we determine to be the most advantageous offer to the City of Midland.	Meets
3.1.5. The City of Midland reserves the right to increase or decrease quantities during the current budget year without penalty.	Meets
3.1.6. All specifications are minimum unless otherwise stated.	Meets

3.2.	**PROVIDE LABOR AND MATERIALS TO REPLACE 8 SPLIT SYSTEMS AND 2 PACKAGE HVAC UNITS AT THE MLK CENTER. INCLUDES:**	
3.2.1	**Qty. 1 – 7.5 Ton Gas Package Unit**	Meets
3.2.2.	**Qty. 1- 3 Ton Gas Package Unit**	Meets
3.2.3.	**Qty. 4 - 5 Ton American Standard split system with 100,000 BTU furnaces**	Meets
3.2.4.	**Qty. 2 - 3 Ton American Standard split system with 60,000 BTU furnaces**	Meets
3.2.5.	**Qty. 2 – 4 Ton American Standard split system with 60,000 BTU furnaces**	Meets
3.2.6.	**All units have hail guards and interconnecting piping.**	Meets
3.2.7.	**All necessary sheet metal modifications**	Meets
3.2.8.	**Excludes removal of plaster ceiling**	Meets
3.2.9.	**Equipment shall be Trane or equal**	Meets

3.4 SPECIAL CONDITIONS

3.4.1	The successful bidder shall include one (1) copies of illustrative and technical data covering equipment proposed.	Meets
3.4.2	The successful bidder will be responsible for the removal and disposal of all used equipment that is being replaced.	Meets
3.4.3	A pre-bid conference will be held at 9:00 A.M. on Wednesday of the week preceding bid opening. The meeting shall be held on site at 2300 Butternut Lane, Midland, Texas. The purpose is to answer any questions and discuss the projects listed on this bid document, and to enable bidders to have a good understanding of the work to be done and materials required.	
3.4.4	All equipment must meet all Federal, State and local standards and/or laws.	Meets
3.4.5	Entire equipment and/or installation are to encompass first class workmanship and attention to detail. All materials shall be new. These comments are not all inclusive but used for illustration only.	Meets
3.4.6	Any inadvertent omissions from the specifications shall not relieve the successful bidder from the responsibility of furnishing an operational unit complete with all necessary components, accessories, controls and technical advice for an efficient, safe operation, performing its' intended function.	Meets
3.4.7	Exceptions for minor deviations from written specifications shall not disqualify a bidder. The City of Midland shall determine what constitutes as a minor deviation.	Meets
3.4.8	**If no exceptions have been taken, it is presumed the offer meets specifications. If the written offer meets specification and the equipment does not meet specification, the vendor will be required to make the correction whenever the discrepancy is discovered.**	Meets

3.4.10 **The bidder is to furnish names, addresses, telephone numbers and the name of a knowledgeable person to contact for at least five (5) customer references the bidder has furnished like equipment to over the previous 12 to 24 months. This requirement is waived if the bidder has provided similar goods or services to the City of Midland.** Meets

3.4.11 New, unused and standard production equipment and components must be furnished. The City of Midland will not accept prototypes or experimental models. Meets

3.4.12 All transactions concerning this bid (excluding an original invoice) must be documented on shipping orders or letter of transmittal and coordinated through the Fleet Services Garage Superintendent. (432) 685-7451 Meets

3.4.13 In order for your bid to be considered, and eliminate the possibility of technical disqualification, be sure the following has been done.

M Make sure you have all pages of specifications

M Be sure you return the specifications

M Be sure you include bid Meets

3.4.14 I hereby certify that the item I proposed to furnish on this invitation to bid meets or exceeds the specifications and intent pertaining thereto, and that the instructions to bidders have been read and conformed to. Deviations from these requirements will be corrected at vendors expense whenever discovered. Meets

3.4.15 Failure to comply with your offer may result in a suspension of the City of Midland accepting your bids. Meets

4. BID WAIVERS:

A. Waiver of Attorney Fees: By submitting a bid, EACH BIDDER AGREES TO WAIVE AND DOES HEREBY WAIVE ANY CLAIM THE BIDDER HAS OR MAY HAVE AGAINST THE CITY OF MIDLAND, TEXAS, AND THE CITY'S RESPECTIVE EMPLOYEES AND REPRESENTATIVES FOR THE AWARD OF ATTORNEY'S FEES, ARISING OUT OF OR IN CONNECTION WITH THE ADMINISTRATION, EVALUATION, OR RECOMMENDATION OF ANY BID; WAIVER OF ANY REQUIREMENTS UNDER THE BID DOCUMENTS; OR THE CONTRACT DOCUMENTS; ACCEPTANCE OR REJECTION OF ANY BIDS; AND AWARD OF THE CONTRACT. BY SUBMITTING A BID, THE BIDDER SPECIFICALLY WAIVE ANY RIGHT TO RECOVER OR BE PAID ATTORNEY'S FEES FROM THE CITY OF MIDLAND, TEXAS, OR ANY OF THE CITY'S EMPLOYEES AND REPRESENTATIVE'S UNDER ANY PROVISIONS OF THE PROVISIONS OF THE TEXAS UNIFORM DECLARATORY JUDGEMENTS ACT (TEXAS CIVIL PRACTICE AND REMEDIES CODE, SECTION 37.001 ET. SEQ., AS AMENDED).

The bidder agrees that this is the intentional relinquishment of a presently existing known right.

By Execution and submission of this bid, the bidder hereby represents and warrants to the City of Midland that the bidder has read and understands the Bid Documents and the Contract Documents and this bid is made in accordance with the Bid Documents. Bidder acknowledges that it understands all terms within the bid Documents which include the waiver provisions, and that it had the right to consult with counsel regarding all of the above documents.

3.4.9 **The delivery address is:**	**City of Midland** **MLK Center** **2300 Butternut Lane** **Midland, Texas 79701**	Meets

B. WAIVER: By submitting a bid, **EACH BIDDER AGREES TO AND DOES HEREBY WAIVE ANY CLAIM THE BIDDER HAS OR MAY HAVE AGAINST THE CITY OF MIDLAND, TEXAS AND THE CITY'S EMPLOYEES, AGENTS AND OFFICERS, ARISING OUT OF OR IN ANY WAY CONNECTED WITH THE FOLLOWING:**

1. **ADMINISTRATION, EVALUATION OR RECOMMENDATION OF ANY BID.**
2. **WAIVER OR DELETION OF ANY OF THE REQUIREMENTS UNDER THE BID DOCUMENTS OR THE CONTRACT DOCUMENTS.**
3. **ACCEPTANCE OR REJECTION OF ANY BIDS; AND**
4. **AWARD OF THE CONTRACT.**

By submitting the bid, the bidder acknowledges that the bidder understands all of the terms of the bidding documents and consents to the bidding process and the possibility of a negative assessment.

By submitting a bid, the bidder acknowledges and agrees that there was and is no disparity of bargaining power between the bidder and the City of Midland, Texas.

The bidder agrees that this is the intentional relinquishment of the above-listed rights.

By Signing Request for bid and/ or below, your company agrees to the above waiver(s). If this form is not signed and included with your bid documents your bid will be considered non-responsive and will be rejected.

First Service Plumbing Heating Air Conditioning — Company Name
432 685-0003 — Phone

Authorized Signature
432 685-3629 — Fax

Amy Standard — Print Above Name
9-11-2024 — Date

Trane Precedent Packaged Rooftop

Unit Overview - YSJ090A3S0

Application	Unit Size	Supply Fan		External Dimensions (in.)			Operating Weight	EER	IEER/SEER	Elevation
		Airflow	Total Static Pressure	Height	Width	Length				
DX Cooling / Gas Heat	7.5 Ton	3000 cfm	0.771 in H2O	50.880 in	53.280 in	88.080 in	980.0 lb	11.00	14.60	0.00 ft

Unit Features

Unit Efficancy	Standard Efficiency
Refrigerant	R-410A



Unit Electrical

Voltage/phase/hertz	208-230/60/3
MCA	42.00 A
MOP	50.00 A
Condenser Fan FLA	3.30 A
Evaporator Fan FLA	8.80 A
Compressor 1 RLA	16.40 A
Compressor 2 RLA	9.20 A
Compressor Power	6.11 kW
System Power	8.59 kW

Controls

Unit Controls	Symbio 700

Cooling Section

Entering Dry Bulb	80.00 F	**Capacity**	
Entering Wet Bulb	67.00 F	**Gross Total**	94.42 MBh
Ambient Temp	95.00 F	**Gross Latent**	21.39 MBh
Leaving Coil Dry Bulb	57.46 F	**Gross Sensible**	73.03 MBh
Leaving Coil Wet Bulb	56.79 F	**Net Total**	91.75 MBh
Leaving Unit Dry Bulb	58.85 F	**Net Sensible**	70.37 MBh
Leaving Unit Wet Bulb	57.35 F	**Net Sensible Heat Ratio**	77.00 %
Saturated Discharge Temperature	116.44 F	**Fan Motor Heat**	1.34 MBh
Saturated Suction Temperature	51.34 F	**Refrig Charge-Circuit 1**	9.0 lb

Heating Section

Heating	Medium Gas Heat
Input Heating Capacity	150.00 MBh
Output Heating Capacity	121.50 MBh
Heating EAT	65.00 F
Heating LAT	102.13 F
Heating Temp Rise	37.13 F
Heating Stages	2

Fan Section

Indoor Fan Data		**Indoor Fan Performance**	
Airflow Application	Downflow	**Airflow**	3000 cfm
Design ESP	0.600 in H2O	**Supply Motor Horsepower**	3.000 hp
Component SP	0.000 in H2O	**Indoor Motor Operating Power**	0.940 hp
Heat SP	0.171 in H2O	**Indoor RPM**	1115 rpm
Total SP	0.771 in H2O	**Outdoor Fan Data**	
Indoor Fan Drive Type	Variable Direct	**Outdoor Fan Drive Type**	Direct
Indoor Fan Quantity	1.00 Number	**Outdoor Fan Quantity**	1
Indoor Fan Type	BC Plenum	**Outdoor Fan Type**	Propeller
		Filters	
		1st Filter Size and Qty	2 - 18 x 24 x 2
		2nd Filter Size and Qty	3 - 24 x 16 x 2

PACKET 12.30 September 24, 2024

Field Installed Accessories

Fresh air selection	Manual outside damper 0-25%
Economizer Conversion Kit	None
Symbio Adv Controls and BACnet Conv Kit	None

Acoustics

Sound Path	63 Hz	125 Hz	250 Hz	500 Hz	1 kHz	2 kHz	4 kHz	8 kHz
Ducted Discharge	77 dB	81 dB	74 dB	67 dB	62 dB	60 dB	60 dB	60 dB
Ducted Inlet	74 dB	74 dB	67 dB	56 dB	53 dB	51 dB	51 dB	51 dB
Outdoor Noise	84 dB	85 dB	84 dB	85 dB	82 dB	76 dB	73 dB	67 dB

Note:Ducted Discharge/Ducted Inlet prediction data conform to AHRI 260

NOTES:
1. VERIFY WEIGHTS, CONNECTIONS, AND ALL DIMENSIONS WITH INSTALLER DOCUMENTS BEFORE INSTALLATION

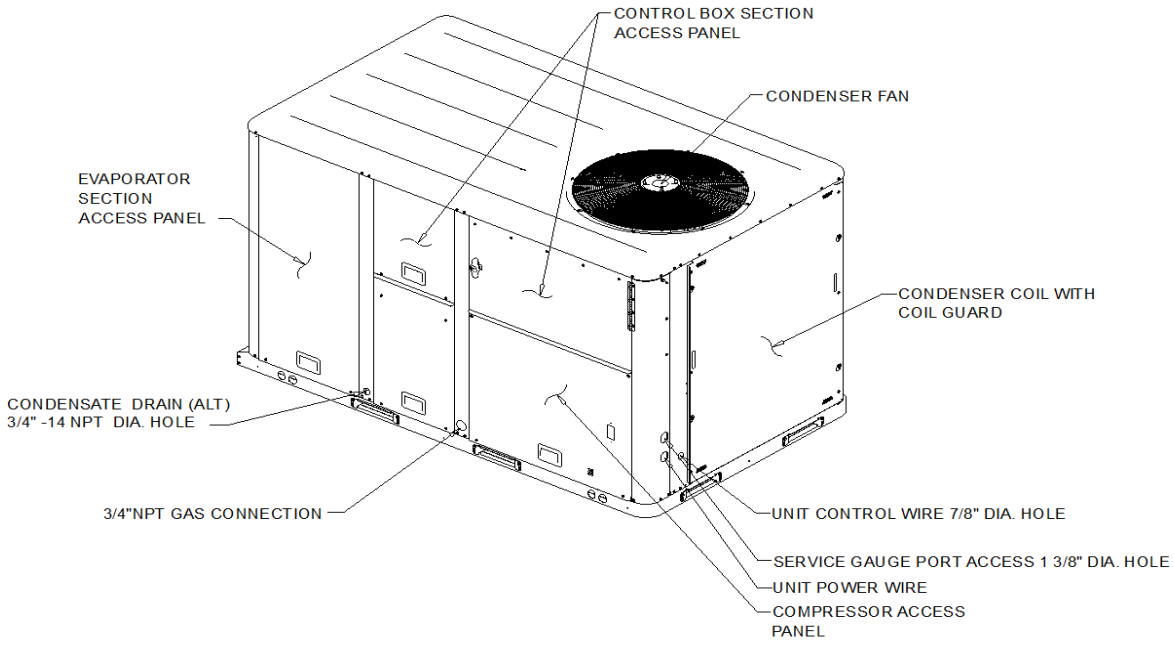

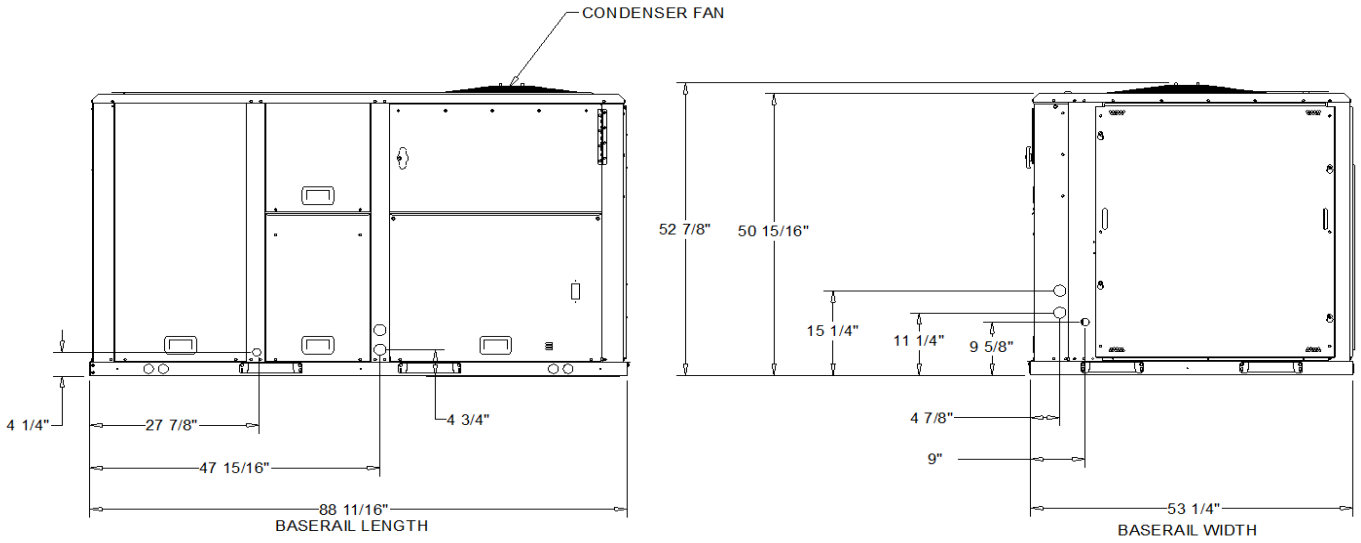

DX COOLING / GAS HEAT STANDARD EFFICIENCY

DIMENSION DRAWING

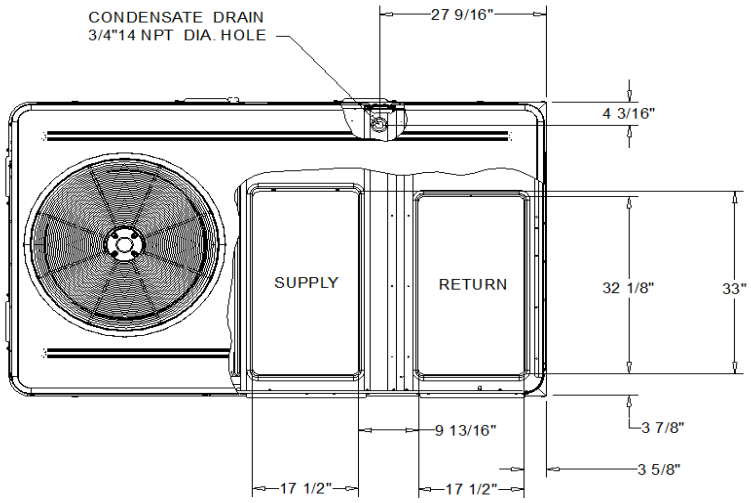

PLAN VIEW OF DOWNFLOW OPENINGS

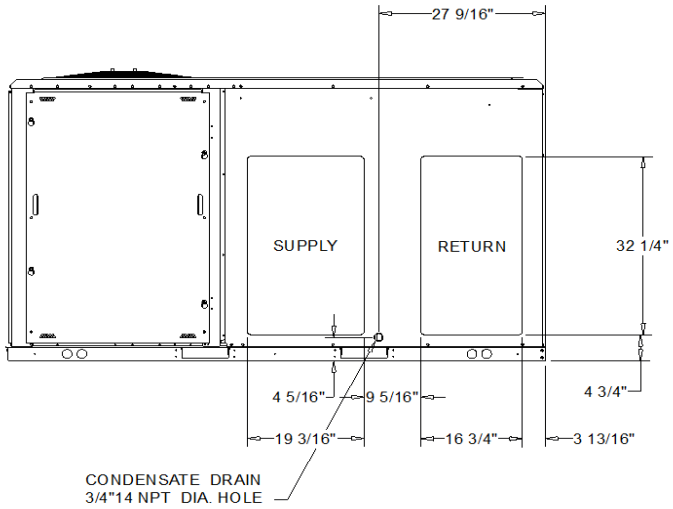

HORIZONTAL AIR FLOW OPENING

DX COOLING / GAS HEAT STANDARD EFFICIENCY

DIMENSION DRAWING

NOTES:
1. APPROX. INSTALLED WEIGHT INCLUDES ALL SELECTED OPTIONS AND ACCESSORIES.
2. CORNER WEIGHTS ARE FOR BASE UNIT ONLY AND DO NOT INCLUDE OPTIONS OR ACCESSORIES.
3. WEIGHT INCLUDES BOTH FACTORY AND FIELD INSTALLED ACCESSORY.

Approximate Installed Weight: 980.0 lb

(B) Corner Weight: 340.0 lb (C) Corner Weight: 196.0 lb
(A) Corner Weight: 365.0 lb (D) Corner Weight: 210.0 lb

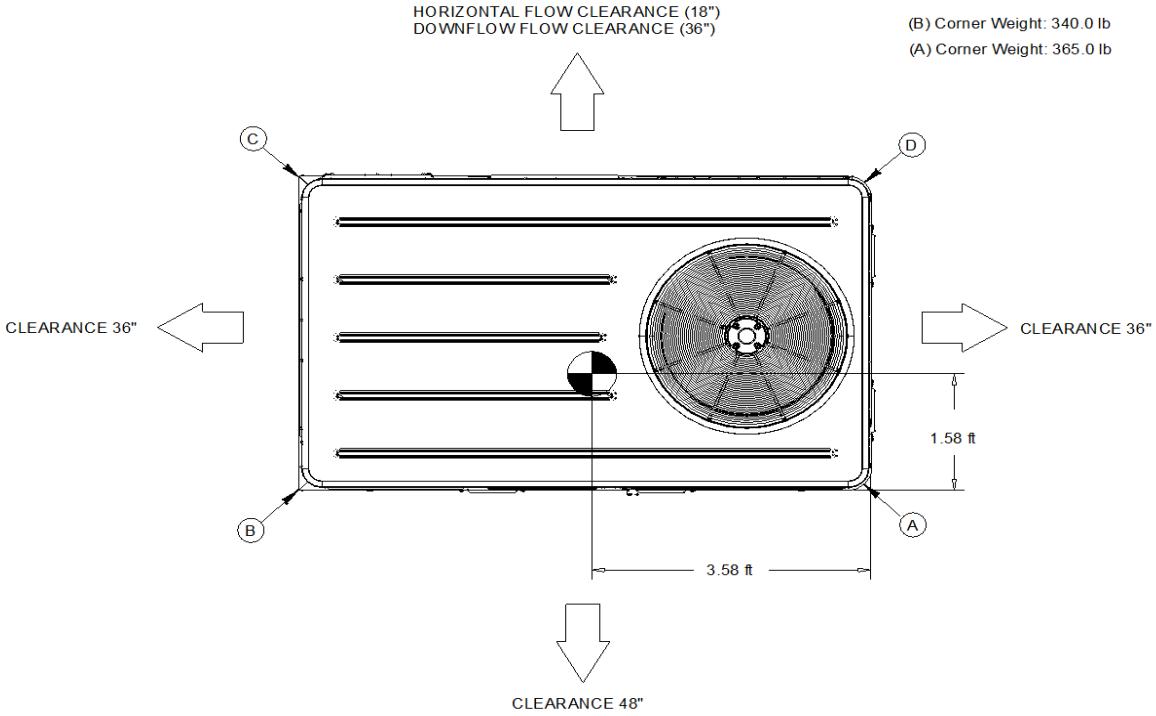

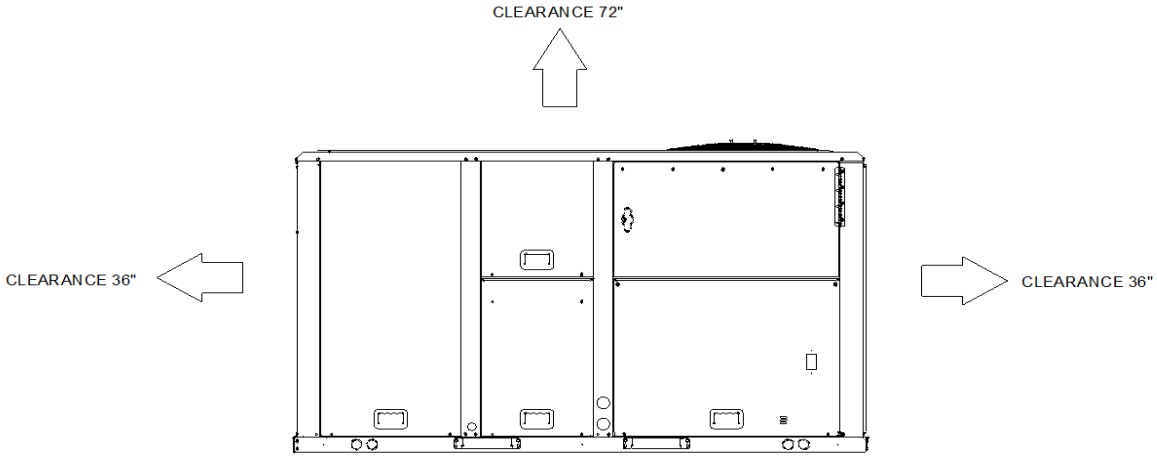

DX COOLING / GAS HEAT STANDARD EFFICIENCY

WEIGHTS AND CLEARANCES

NOTES:
1. VERIFY WEIGHT, CONNECTION, AND ALL DIMENSION WITH INSTALLER DOCUMENTS BEFORE INSTALLATION

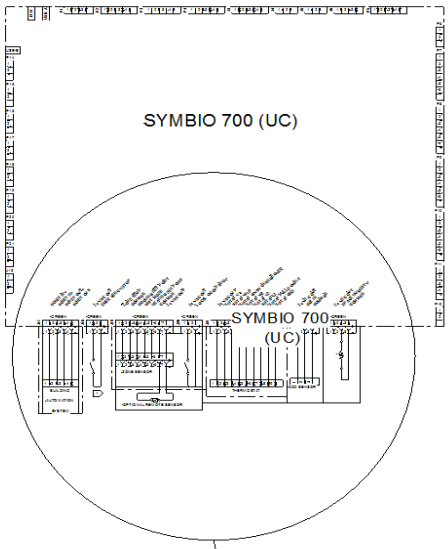

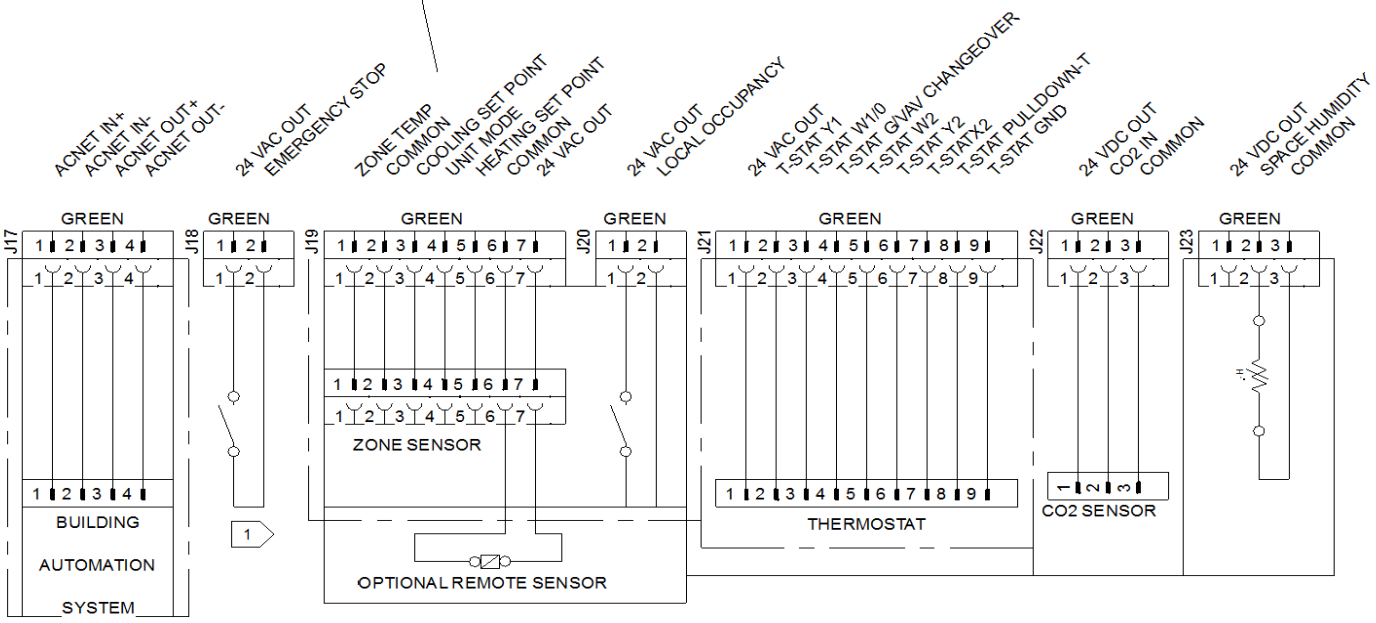

SYMBIO 700 (J17, j18, J19, J20, J21, J22, AND J23)

FIELD WIRING DRAWING

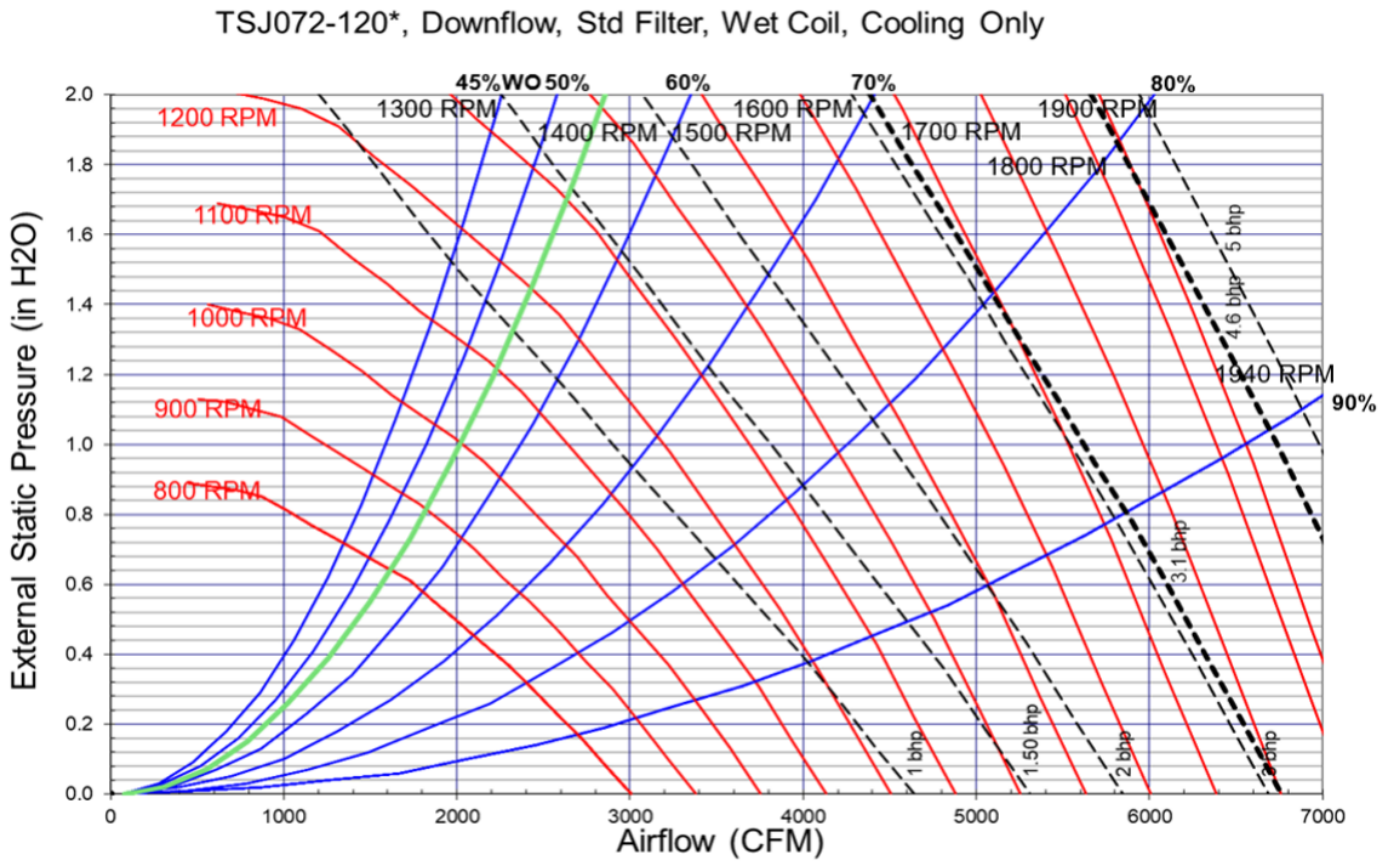

Note: Fan Curves are for TSJ/WSJ units. For YSJ units, add additional static pressure for Gas Heat Exchanger (ref. RT-PRC098*, table 47)

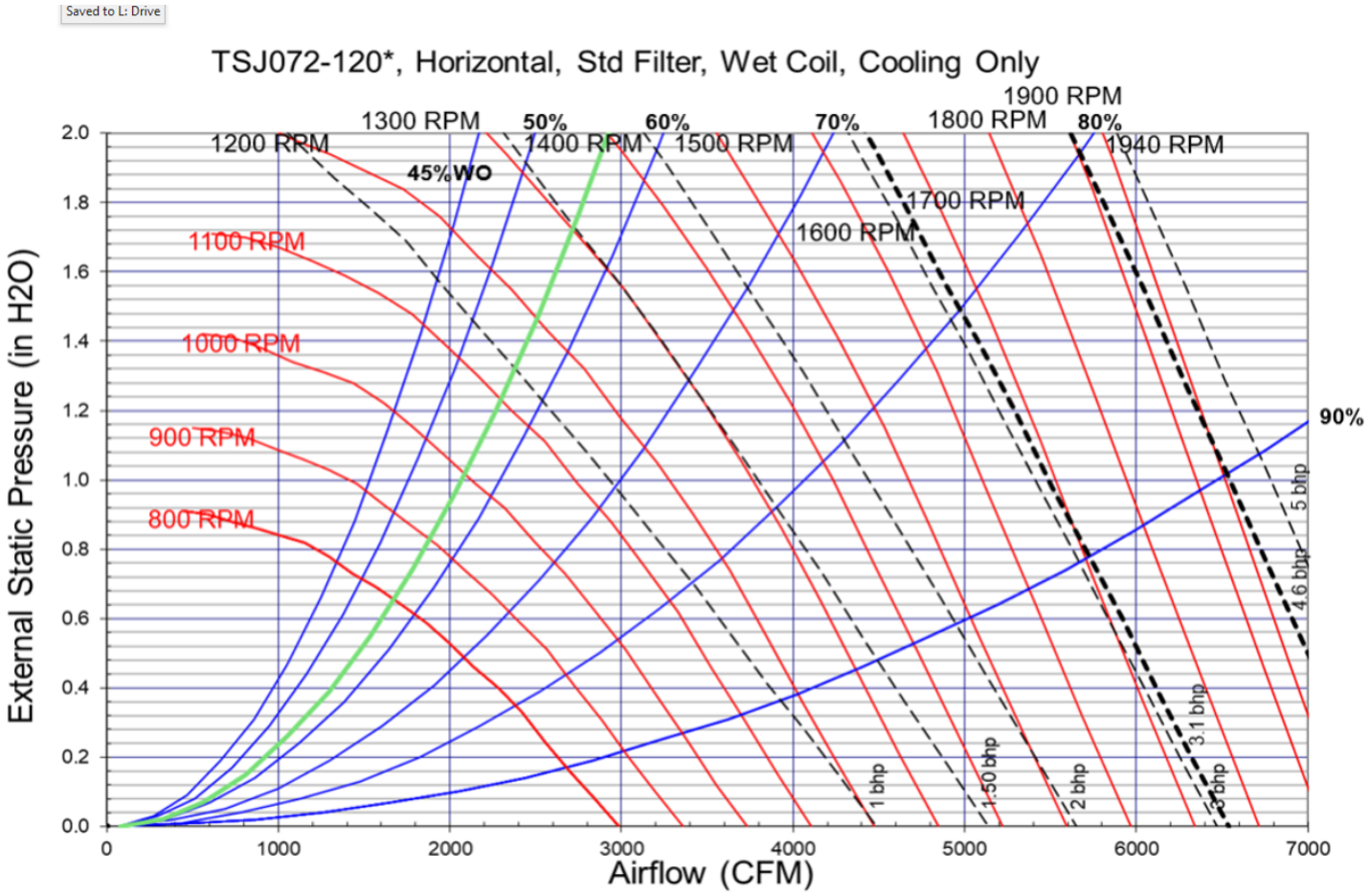

Note: Fan Curves are for TSJ/WSJ units. For YSJ units, add additional static pressure for Gas Heat Exchanger (ref. RT-PRC098*, table 47)

1.5 - 5 Ton Unitary Split System

Unit Overview

System Type	A/C with Furnace/Coil		
Outdoor Unit Model	4TTA4	**Indoor Unit Model**	4TXC+S8X1B
Outdoor Unit Nominal Capacity	036	**Indoor Unit Nominal Capacity**	004

AHRI Data

AHRI Reference Number	-1
Airflow @ AHRI	1120 cfm
Capacity @ AHRI	35000.00 Btuh
EER/EER2 @ AHRI	12.5
SEER/SEER2 @ AHRI	15.00



Unit Electrical

Outdoor Unit	4TTA4036A3	**Indoor Unit**	4TXCB004DS3+S8X1B060M4PSC
Power Supply	200-230/3/60	**Power Supply**	115/1/60

Cooling Performance

Cooling Airflow	1200 cfm	**Net Cooling Capacity**	35500.00 Btuh
Cooling EDB	80.00 F	**Net Sensible Capacity**	26200.00 Btuh
Cooling EWB	67.00 F	**Net Latent Capacity**	9300.00 Btuh
Cooling Outdoor Temp.	95.00 F	**Cooling LDB**	59.50 F
		Cooling LWB	57.30 F

Heating Performance - Furnace

Heating Airflow	1200 cfm	**Heating EDB**	70.00 F

NOTES
1. TOP DISCHARGE AREA SHOULD BE UNRESTRICTED FOR AT LEAST 60" ABOVE UNIT. UNIT SHOULD BE PLACED SO ROOF RUN-OFF WATER DOES NOT POUR DIRECTLY ON UNIT, AND SHOULD BE AT LEAST 12" FROM WALL AND ALL SURROUNDING SHRUBBERY ON TWO SIDES. OTHER TWO SIDES UNRESTRICTED.
2. ELECTRICAL AND REFRIGERANT COMPONENT CLEARANCES PER PREVAILING CODES.
3. VERIFY WEIGHT, CONNECTION, AND ALL DIMENSION WITH INSTALLER DOCUMENTS BEFORE INSTALLATION

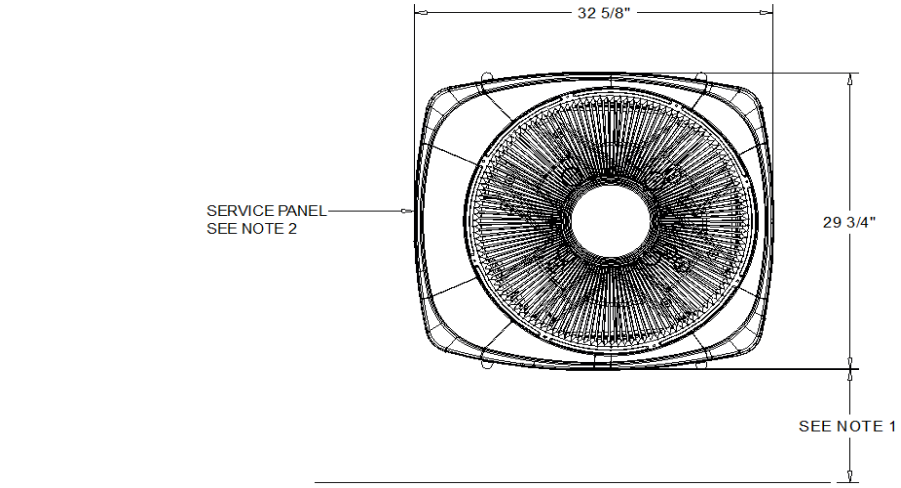

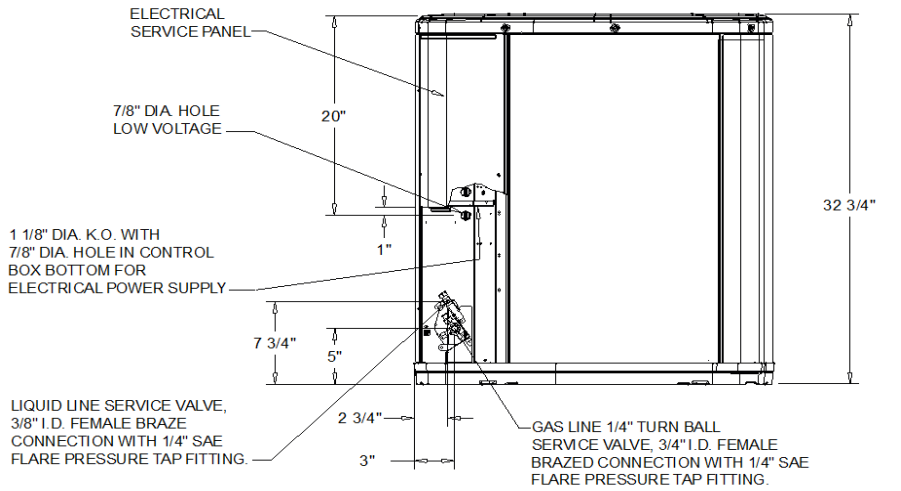

SPLIT SYSTEM COOLING - 4TTA4036

OUTLINE DRAWING

ELECTRICAL / GENERAL DATA

GENERAL		POWER CONN.		COMPRESSOR	
Model:	4TTA4036A3000A	Minimum Circuit Ampacity:	12.0	Number:	1
Operating Voltage:		Maximum Circuit Breaker:	20.0	Phase:	3
Unit Primary Voltage:		Minimum Protection Rating:	20.0	Rated Load Amps:	9.0
Unit Secondary Voltage				Locked Rotor Amps:	71.0
Unit Hertz:					
Unit Phase:					

OUTDOOR MOTOR	
Number:	1
Horsepower:	0.125
Motor Speed (RPM):	-
Phase:	1
Full Load Amps:	0.77
Locked Rotor Amps:	-

REFRIGERANT	
Type:	R-410A
Charge:	6.1 lb
Line Size O.D. Gas:	3/4"
Line Size O.D. LIQ:	3/8"

NOTES:
1. Certified in accordance with the Unitary Air-Conditioner equipment certification program which is based on AHRI Standard 210/240.
2. Calculated in accordance with N.E.C. Use only HACR circuit breakers or fuses.
3. Standard line lengths - 60'. Standard lift - 60' Suction and Liquid line. For Greater lengths and lifts refer to refrigerant piping software Pub# 32-3312-0
4. * = 15, 20, 25, 30, 40 and 50 foot lineset available.

WEIGHT	
NET	156.0 lb
SHIPPING	183.0 lb

NOTES:
C1. TOP DISCHARGE SHOULD BE UNRESTRICTED FOR AT LEAST 60" ABOVE UNIT
C2. PLACE UNIT FROM WALL
C3. PLACE SHRUBBERY AT LEAST 12" FROM UNIT ON TWO SIDES, OTHER SIDES UNRESTRICTED
C4. PLACE UNIT SO ROOF RUN-OFF DOES NOT FALL DIRECTLY ON UNIT

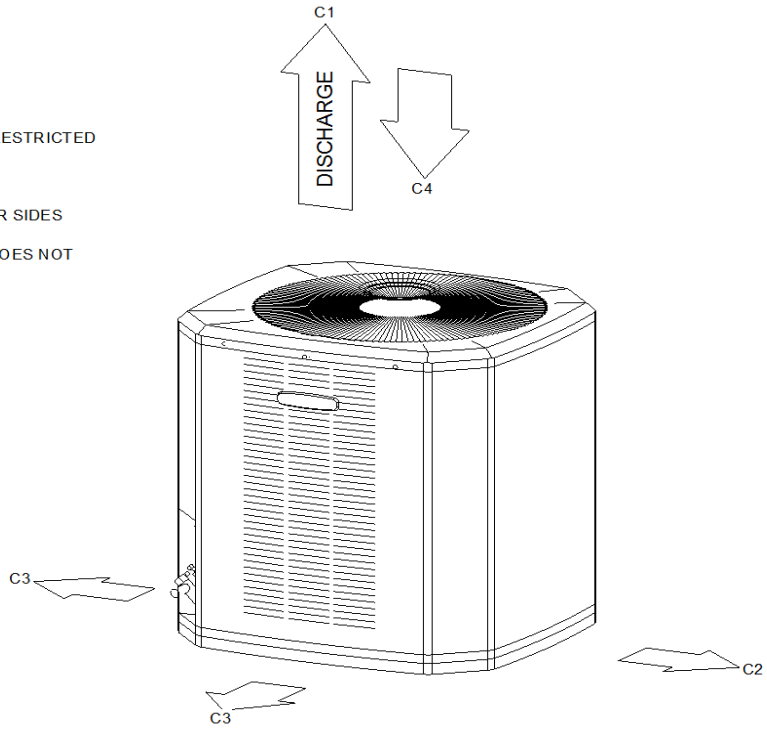

WEIGHT AND CLEARANCE

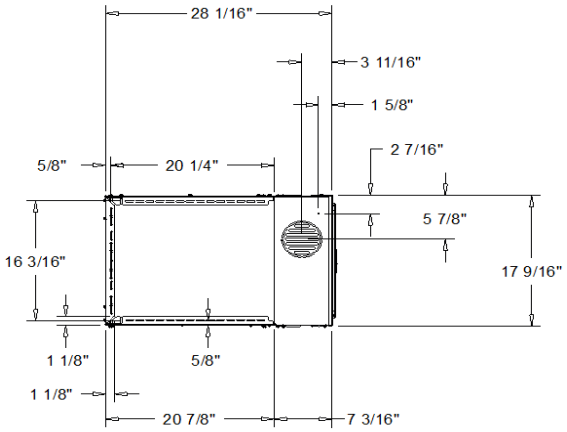

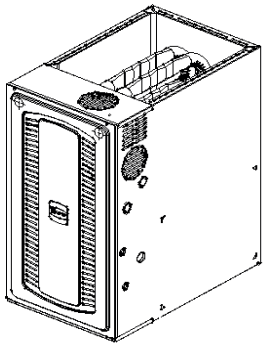

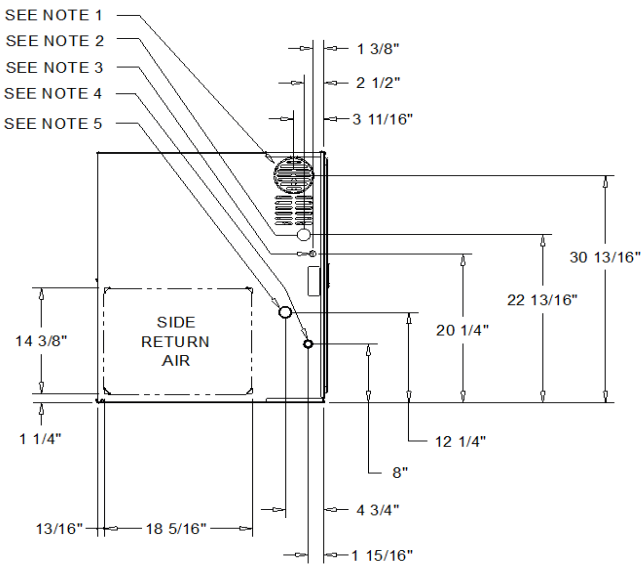

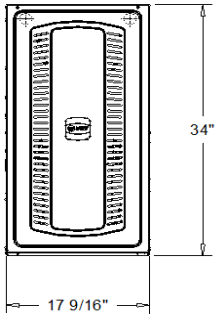

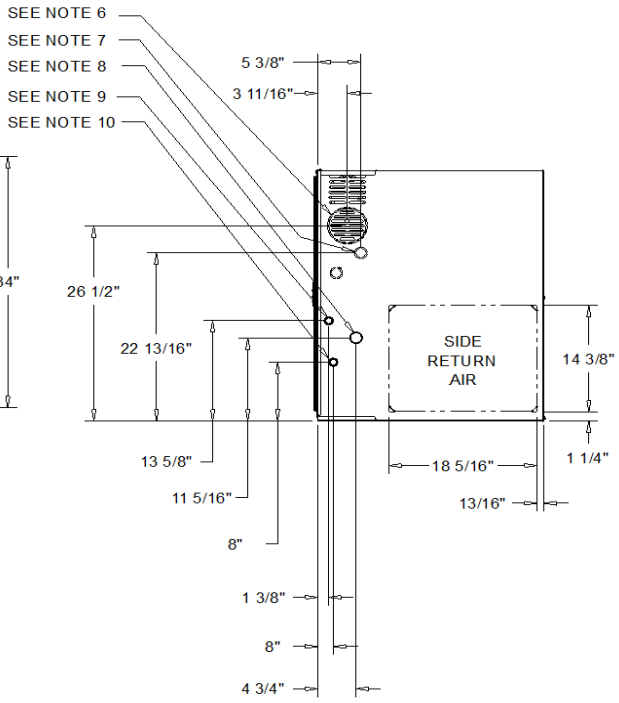

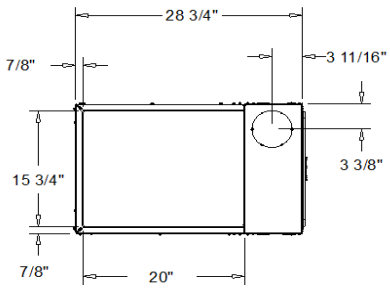

NOTES:
1) 5" FLUE OUTLET
2) 1 5/8" DIA GAS SUPPLY
3) 7/8" ELECTRICAL WIRES
4) 7/8" THERMOSTAT WIRES
5) NOT USED
6) 5" FLUE OUTLET
7) 1 5/8" DIA GAS SUPPLY (ALTERNATE)
8) 7/8" ELECTRICAL WIRES (ALTERNATE)
9) NOT USED
10) 7/8" THERMOSTAT WIRES (ALTERNATE)
11) VERIFY WEIGHT, CONNECTION, AND ALL DIMENSION WITH INSTALLER DOCUMENTS BEFORE INSTALLATION

S8X1 B - CABINET FURNACE

UNIT DRAWING

ELECTRICAL / GENERAL DATA

Furnace

GENERAL - POWER CONN

Model:	S8X1B060M4PSAB
Voltage:	120/1/60
Ampacity (Amps):	13.1
Max Over. Pro. (Amps):	15.0

COMBUSTION FAN

Type:	Centrifugal
Motor HP:	-
Motor Speed RPM:	3300
Phase:	1
Full Load Amps:	1.39

BLOWER DRIVE

Drive:	Direct
No. Used:	1
Motor HP:	0.75
Speed RPM:	1075
Phase:	1
FLA:	8.4

ORIFICES

Nat. Gas Qty - Drill Size:	3 - 45
L.P. Gas Qty. - Drill Size:	N/A
Gas Valve:	Redundant - Single Stage

RATINGS (b)

1st Stage input BTUH:	60000
1st Stage Capacity BTUH (ICS):	48000
2st Stage input BTUH:	N/A
2st Stage Capacity BTUH (ICS) (c,d) :	N/A
1st Stage Temp. Rise (Min.-Max.) :	30-60
2nd Stage Temp. Rise (Min.-Max.):	N/A
AFUE (%) (c,d):	80

FILTERS

Type:	High Velocity
Furnished:	No
Recommended	1 - 16"x25"x1"

BURNERS

Type:	120 V SiNi Igniter
Number:	3

WEIGHT / DIMENSIONS

Shipping:	132.0 lb
Net:	124.0 lb
Dimension (Crated):	35 1/2"x19 1/2"x30 7/8"

Notes:
(a For U.S. applications, above input ratings (BTUH) are up to 2,000 feet, derate 4 % per 1,000 feet for elevations above 2,000 feet above sea level. For Canadian applications, above input ratings (BTUH) are up to 4,500 feet, derate 4 % per 1,000 feet for elevations above 4,500 feet above sea level.
(b) Central Furnace heating designs are certified to ANSI Z21.47 / CSA 2.3 - latest edition.
(c) Based on U.S. government standard tests.
(d) Refer to the Vent Length Table in the Installer's Guide.
(e The above wiring specifications are in accordance with National Electrical Code; however, installations must comply with local codes.

4TXCB004

DIMENSION (A):	22 1/2"
DIMENSION (B):	17 1/2"
DIMENSION (C):	16 5/8"
DIMENSION (D):	15 3/4"
MATCH FURNACE WIDTH:	17 1/2"
GAS:	3/4" BRAZE
LIQUID:	3/8" BRAZE
WEIGHT:	50.0 lb

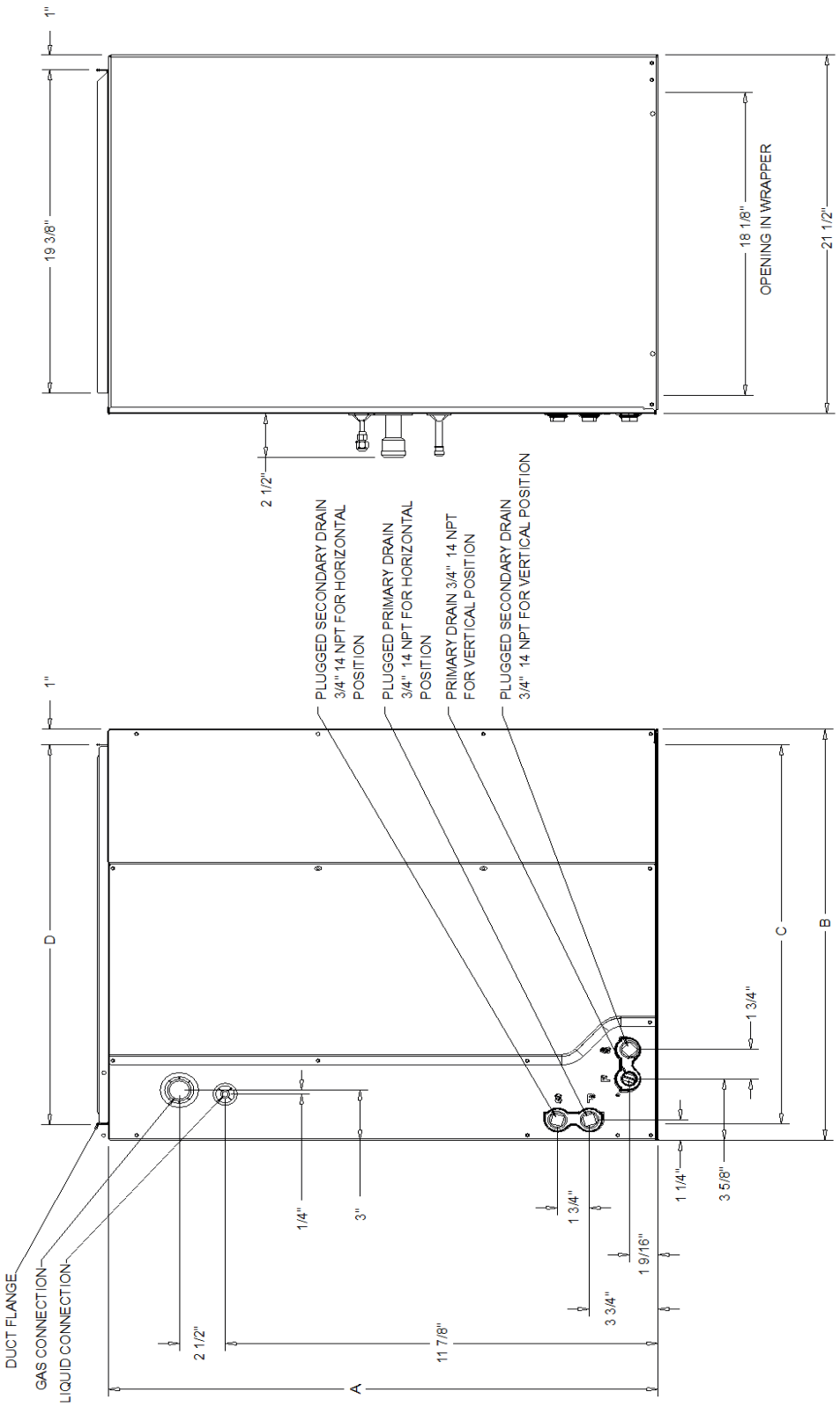

1.5 - 5 Ton Unitary Split System

Unit Overview

System Type	A/C with Furnace/Coil		
Outdoor Unit Model	4TTA4	**Indoor Unit Model**	4TXC+S8X1C
Outdoor Unit Nominal Capacity	048	**Indoor Unit Nominal Capacity**	007

AHRI Data

AHRI Reference Number	-1
Airflow @ AHRI	1440 cfm
Capacity @ AHRI	46500.00 Btuh
EER/EER2 @ AHRI	12.2
SEER/SEER2 @ AHRI	14.50



Unit Electrical

Outdoor Unit	4TTA4048A3	**Indoor Unit**	4TXCC007DS3+S8X1C080M5PSC
Power Supply	200-230/3/60	**Power Supply**	115/1/60

Cooling Performance

Cooling Airflow	1600 cfm	**Net Cooling Capacity**	47400.00 Btuh
Cooling EDB	80.00 F	**Net Sensible Capacity**	36600.00 Btuh
Cooling EWB	67.00 F	**Net Latent Capacity**	10800.00 Btuh
Cooling Outdoor Temp.	95.00 F	**Cooling LDB**	58.50 F
		Cooling LWB	57.30 F

Heating Performance - Furnace

Heating Airflow	1600 cfm	**Heating EDB**	70.00 F

NOTES
1. TOP DISCHARGE AREA SHOULD BE UNRESTRICTED FOR AT LEAST 60" ABOVE UNIT. UNIT SHOULD BE PLACED SO ROOF RUN-OFF WATER DOES NOT POUR DIRECTLY ON UNIT, AND SHOULD BE AT LEAST 12" FROM WALL AND ALL SURROUNDING SHRUBBERY ON TWO SIDES. OTHER TWO SIDES UNRESTRICTED.
2. ELECTRICAL AND REFRIGERANT COMPONENT CLEARANCES PER PREVAILING CODES.
3. VERIFY WEIGHT, CONNECTION, AND ALL DIMENSION WITH INSTALLER DOCUMENTS BEFORE INSTALLATION

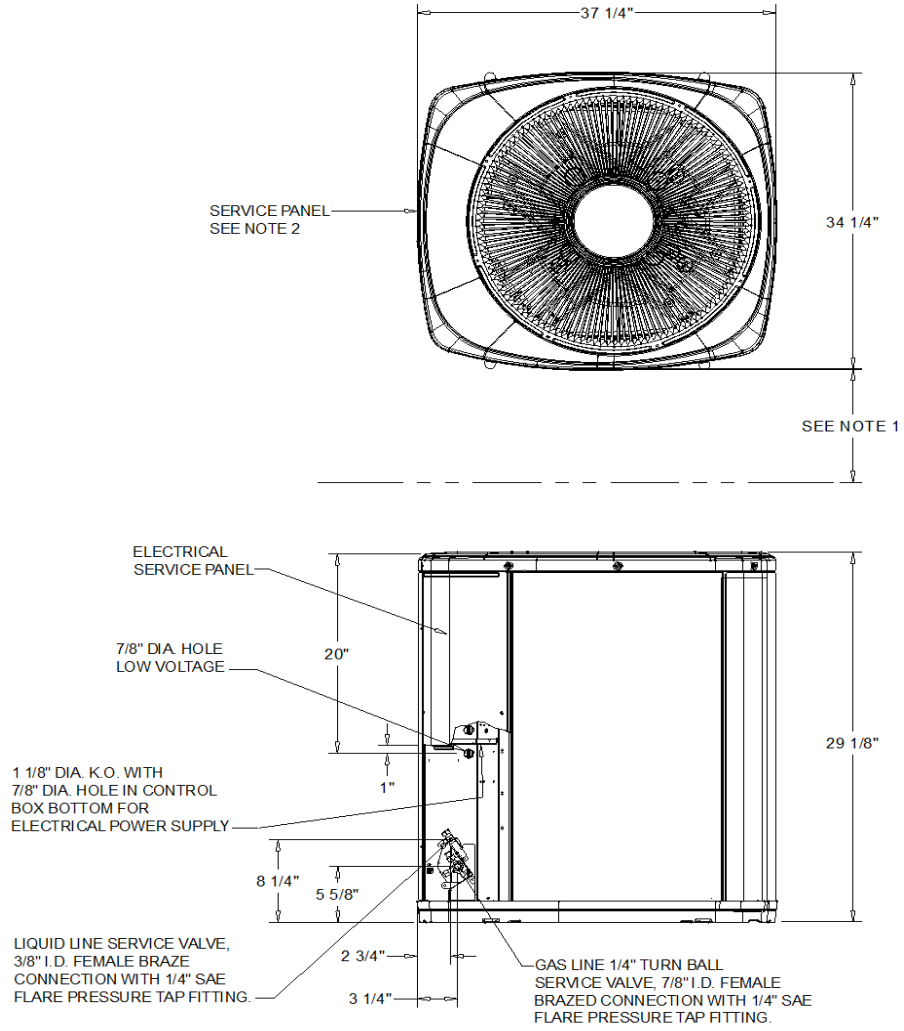

SPLIT SYSTEM COOLING - 4TTA4048

OUTLINE DRAWING

ELECTRICAL / GENERAL DATA

GENERAL		POWER CONN.		COMPRESSOR	
Model:	4TTA4048A3000A	Minimum Circuit Ampacity:	18.0	Number:	1
Operating Voltage:		Maximum Circuit Breaker:	30.0	Phase:	3
Unit Primary Voltage:		Minimum Protection Rating:	30.0	Rated Load Amps:	13.8
Unit Secondary Voltage				Locked Rotor Amps:	83.0
Unit Hertz:					
Unit Phase:					

OUTDOOR MOTOR	
Number:	1
Horsepower:	0.20
Motor Speed (RPM):	-
Phase:	1
Full Load Amps:	1.05
Locked Rotor Amps:	-

REFRIGERANT	
Type:	R-410A
Charge:	6.6 lb
Line Size O.D. Gas:	7/8"
Line Size O.D. LIQ:	3/8"

NOTES:
1. Certified in accordance with the Unitary Air-Conditioner equipment certification program which is based on AHRI Standard 210/240.
2. Calculated in accordance with N.E.C. Use only HACR circuit breakers or fuses.
3. Standard line lengths - 60'. Standard lift - 60' Suction and Liquid line. For Greater lengths and lifts refer to refrigerant piping software Pub# 32-3312-0
4. * = 15, 20, 25, 30, 40 and 50 foot lineset available.

WEIGHT	
NET	189.0 lb
SHIPPING	212.0 lb

NOTES:
C1. TOP DISCHARGE SHOULD BE UNRESTRICTED FOR AT LEAST 60" ABOVE UNIT
C2. PLACE UNIT FROM WALL
C3. PLACE SHRUBBERY AT LEAST 12" FROM UNIT ON TWO SIDES, OTHER SIDES UNRESTRICTED
C4. PLACE UNIT SO ROOF RUN-OFF DOES NOT FALL DIRECTLY ON UNIT

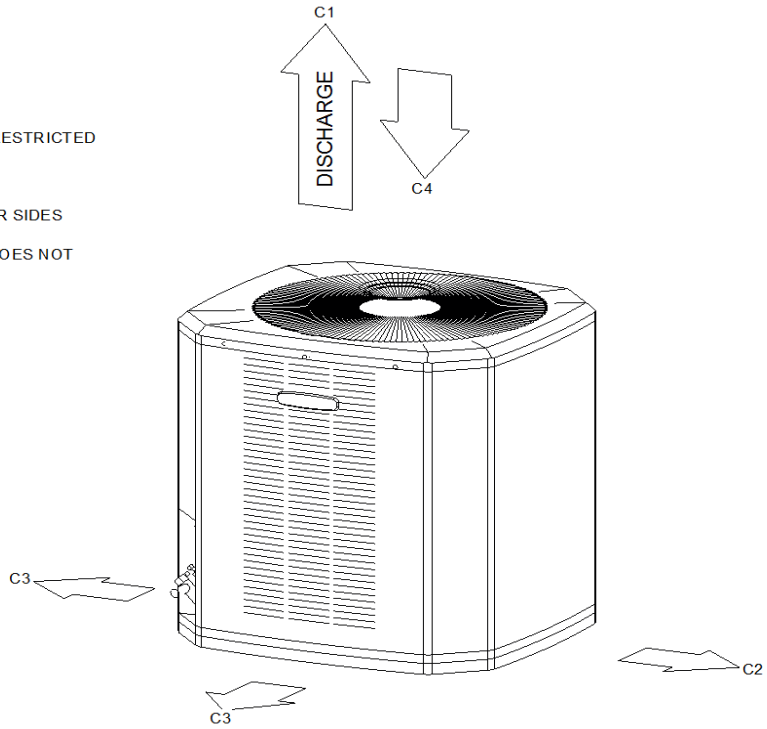

WEIGHT AND CLEARANCE

ELECTRICAL / GENERAL DATA

Furnace

GENERAL - POWER CONN

Model:	S8X1C080M5PSAB
Voltage:	120/1/60
Ampacity (Amps):	14.1
Max Over. Pro. (Amps):	15.0

COMBUSTION FAN

Type:	Centrifugal
Motor HP:	-
Motor Speed RPM:	3300
Phase:	1
Full Load Amps:	0.30

BLOWER DRIVE

Drive:	Direct
No. Used:	1
Motor HP:	1.0
Speed RPM:	1075
Phase:	1
FLA:	10.9

ORIFICES

Nat. Gas Qty - Drill Size:	4 - 45
L.P. Gas Qty. - Drill Size:	N/A
Gas Valve:	Redundant - Single Stage

RATINGS (b)

1st Stage input BTUH:	80000
1st Stage Capacity BTUH (ICS):	64000
2st Stage input BTUH:	N/A
2st Stage Capacity BTUH (ICS) (c,d) :	N/A
1st Stage Temp. Rise (Min.-Max.) :	30-60
2nd Stage Temp. Rise (Min.-Max.):	N/A
AFUE (%) (c,d):	80

FILTERS

Type:	High Velocity
Furnished:	No
Recommended	1 - 20"x25"x1"

BURNERS

Type:	120 V SiNi Igniter
Number:	4

WEIGHT / DIMENSIONS

Shipping:	142.0 lb
Net:	134.0 lb
Dimension (Crated):	35 1/2"x23"x30 7/8"

Notes:
(a For U.S. applications, above input ratings (BTUH) are up to 2,000 feet, derate 4 % per 1,000 feet for elevations above 2,000 feet above sea level. For Canadian applications, above input ratings (BTUH) are up to 4,500 feet, derate 4 % per 1,000 feet for elevations above 4,500 feet above sea level.
(b) Central Furnace heating designs are certified to ANSI Z21.47 / CSA 2.3 - latest edition.
(c) Based on U.S. government standard tests.
(d) Refer to the Vent Length Table in the Installer's Guide.
(e The above wiring specifications are in accordance with National Electrical Code; however, installations must comply with local codes.

4TXCC007

DIMENSION (A):	26 7/8"
DIMENSION (B):	21"
DIMENSION (C):	20 1/8"
DIMENSION (D):	19 1/4"
MATCH FURNACE WIDTH:	21"
GAS:	3/4" BRAZE
LIQUID:	3/8" BRAZE
WEIGHT:	51.0 lb

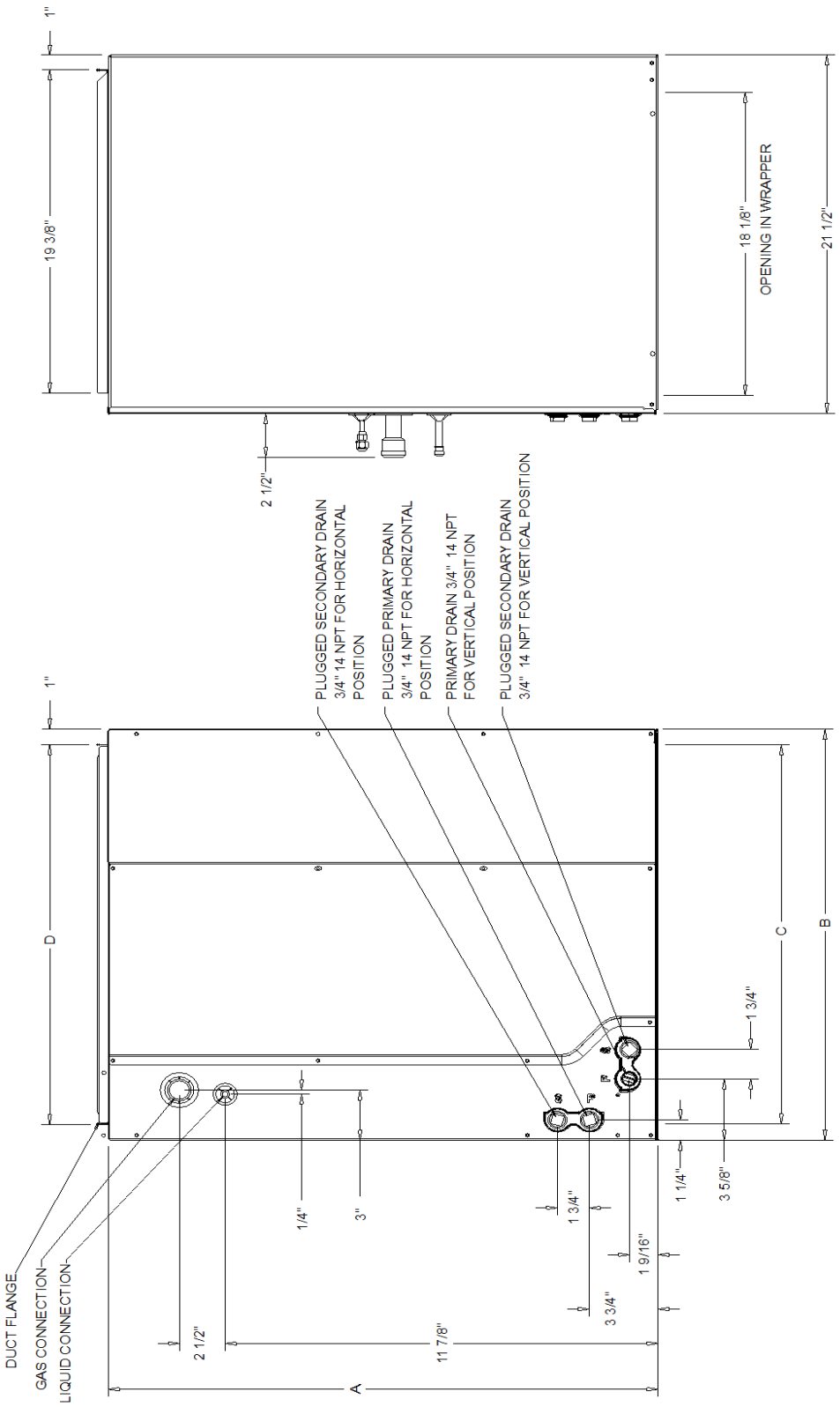

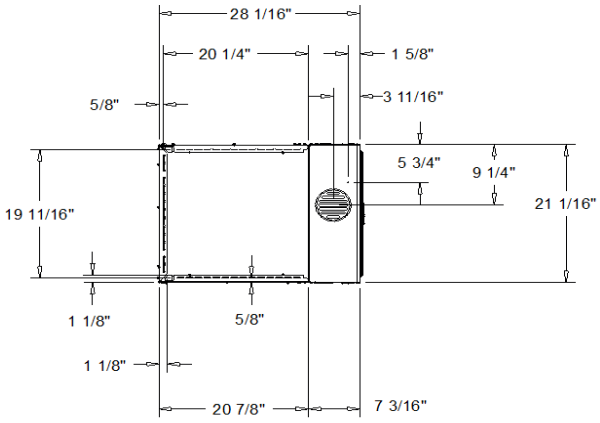

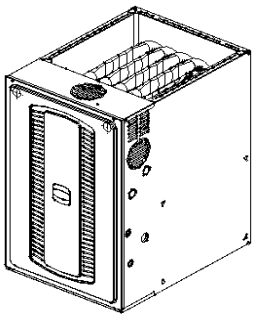

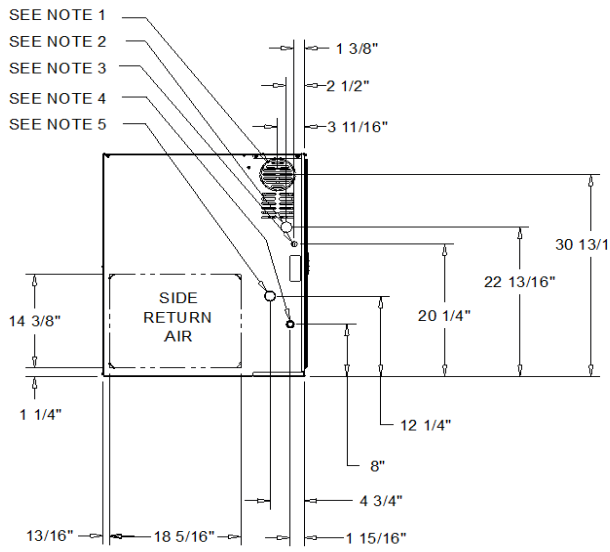

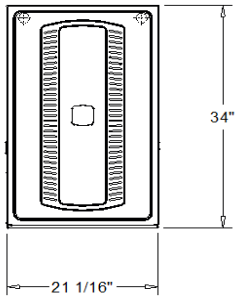

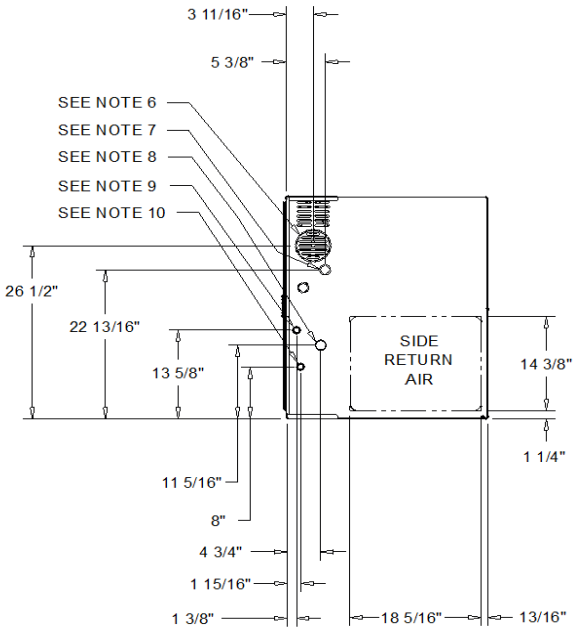

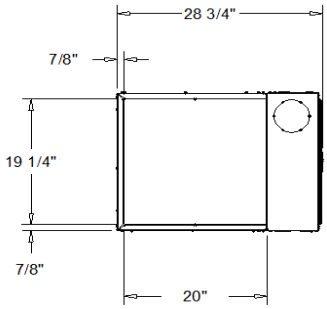

NOTES:
1) 5" FLUE OUTLET
2) 1 5/8" DIA GAS SUPPLY
3) 7/8" ELECTRICAL WIRES
4) 7/8" THERMOSTAT WIRES
5) NOT USED
6) 5" FLUE OUTLET
7) 1 5/8" DIA GAS SUPPLY (ALTERNATE)
8) NOT USED
9) 7/8" ELECTRICAL WIRES (ALTERNATE)
10) 7/8" THERMOSTAT WIRES (ALTERNATE)
11) VERIFY WEIGHT, CONNECTION, AND ALL DIMENSION WITH INSTALLER DOCUMENTS BEFORE INSTALLATION

S8X1 C CABINET FURNACE

UNIT DRAWING

1.5 - 5 Ton Unitary Split System

Unit Overview

System Type	A/C with Furnace/Coil		
Outdoor Unit Model	4TTA4	**Indoor Unit Model**	4TXC+S8X1C
Outdoor Unit Nominal Capacity	060	**Indoor Unit Nominal Capacity**	009

AHRI Data

AHRI Reference Number	-1
Airflow @ AHRI	1545 cfm
Capacity @ AHRI	57000.00 Btuh
EER/EER2 @ AHRI	11.7
SEER/SEER2 @ AHRI	14.00



Unit Electrical

Outdoor Unit	4TTA4060A3	**Indoor Unit**	4TXCC009DS3+S8X1C100M5PSC
Power Supply	200-230/3/60	**Power Supply**	115/1/60

Cooling Performance

Cooling Airflow	1950 cfm	**Net Cooling Capacity**	59466.00 Btuh
Cooling EDB	80.00 F	**Net Sensible Capacity**	45689.00 Btuh
Cooling EWB	67.00 F	**Net Latent Capacity**	13777.00 Btuh
Cooling Outdoor Temp.	95.00 F	**Cooling LDB**	58.00 F
		Cooling LWB	57.00 F

Heating Performance - Furnace

Heating Airflow	1950 cfm	**Heating EDB**	70.00 F

NOTES
1. TOP DISCHARGE AREA SHOULD BE UNRESTRICTED FOR AT LEAST 60" ABOVE UNIT. UNIT SHOULD BE PLACED SO ROOF RUN-OFF WATER DOES NOT POUR DIRECTLY ON UNIT, AND SHOULD BE AT LEAST 12" FROM WALL AND ALL SURROUNDING SHRUBBERY ON TWO SIDES. OTHER TWO SIDES UNRESTRICTED.
2. ELECTRICAL AND REFRIGERANT COMPONENT CLEARANCES PER PREVAILING CODES.
3. VERIFY WEIGHT, CONNECTION, AND ALL DIMENSION WITH INSTALLER DOCUMENTS BEFORE INSTALLATION

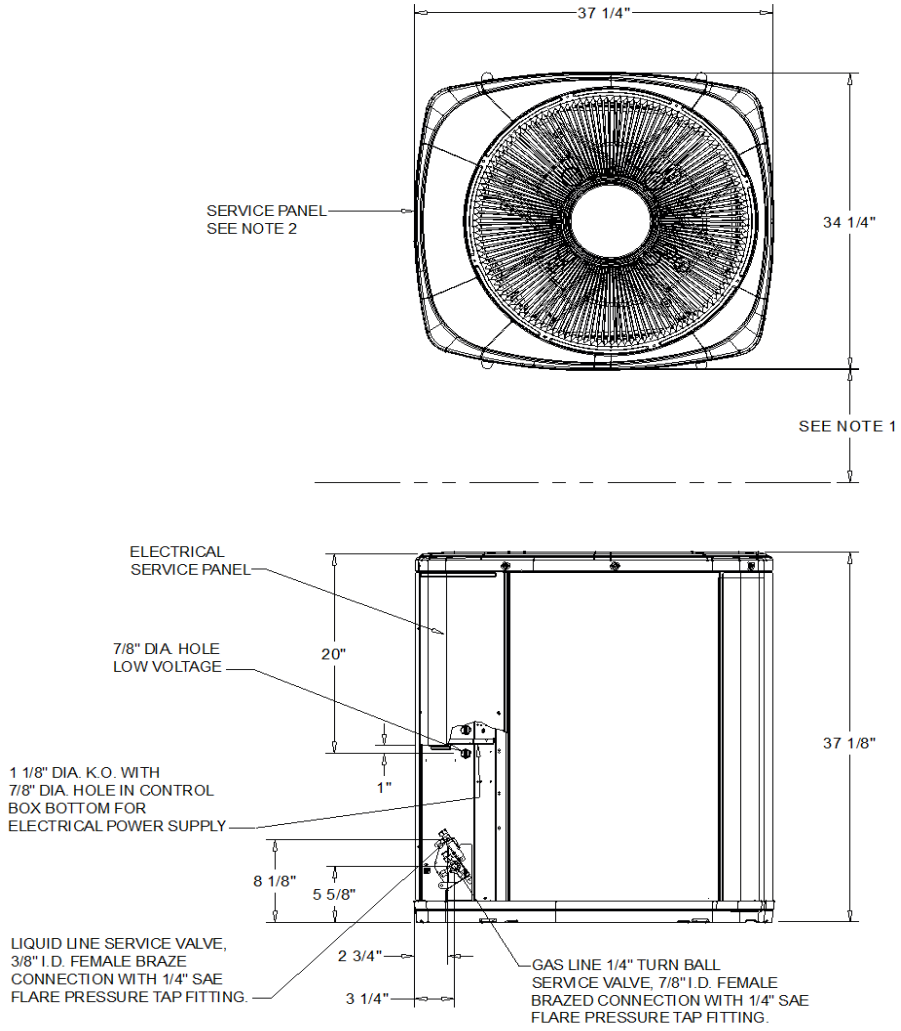

SPLIT SYSTEM COOLING - 4TTA4060

OUTLINE DRAWING

ELECTRICAL / GENERAL DATA

GENERAL		POWER CONN.		COMPRESSOR	
Model:	4TTA4060A3000A	Minimum Circuit Ampacity:	21.0	Number:	1
Operating Voltage:		Maximum Circuit Breaker:	35.0	Phase:	3
Unit Primary Voltage:		Minimum Protection Rating:	35.0	Rated Load Amps:	15.9
Unit Secondary Voltage				Locked Rotor Amps:	110.0
Unit Hertz:					
Unit Phase:					

OUTDOOR MOTOR	
Number:	1
Horsepower:	0.20
Motor Speed (RPM):	-
Phase:	1
Full Load Amps:	1.05
Locked Rotor Amps:	-

REFRIGERANT	
Type:	R-410A
Charge:	7.6 lb
Line Size O.D. Gas:	7/8"
Line Size O.D. LIQ:	3/8"

NOTES:
1. Certified in accordance with the Unitary Air-Conditioner equipment certification program which is based on AHRI Standard 210/240.
2. Calculated in accordance with N.E.C. Use only HACR circuit breakers or fuses.
3. Standard line lengths - 60'. Standard lift - 60' Suction and Liquid line. For Greater lengths and lifts refer to refrigerant piping software Pub# 32-3312-0
4. * = 15, 20, 25, 30, 40 and 50 foot lineset available.

WEIGHT	
NET	211.0 lb
SHIPPING	246.0 lb

NOTES:
C1. TOP DISCHARGE SHOULD BE UNRESTRICTED FOR AT LEAST 60" ABOVE UNIT
C2. PLACE UNIT FROM WALL
C3. PLACE SHRUBBERY AT LEAST 12" FROM UNIT ON TWO SIDES, OTHER SIDES UNRESTRICTED
C4. PLACE UNIT SO ROOF RUN-OFF DOES NOT FALL DIRECTLY ON UNIT

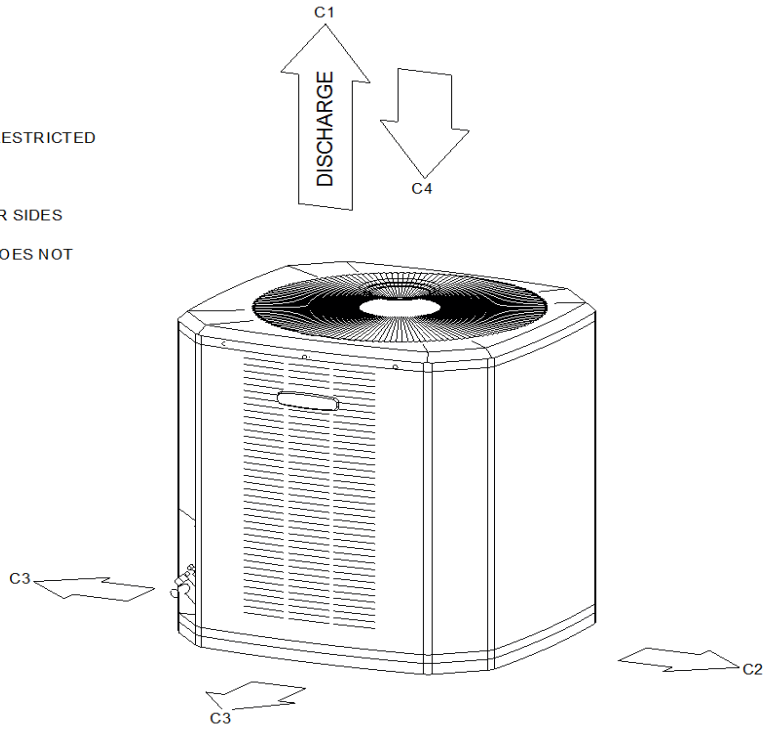

WEIGHT AND CLEARANCE

ELECTRICAL / GENERAL DATA

Furnace

GENERAL - POWER CONN

Model:	S8X1C100M5PSAB
Voltage:	120/1/60
Ampacity (Amps):	14.1
Max Over. Pro. (Amps):	15.0

ORIFICES

Nat. Gas Qty - Drill Size:	5 - 45
L.P. Gas Qty. - Drill Size:	N/A
Gas Valve:	Redundant - Single Stage

BURNERS

Type:	120 V SiNi Igniter
Number:	5

COMBUSTION FAN

Type:	Centrifugal
Motor HP:	-
Motor Speed RPM:	3300
Phase:	1
Full Load Amps:	0.30

RATINGS (b)

1st Stage input BTUH:	100000
1st Stage Capacity BTUH (ICS):	80000
2st Stage input BTUH:	N/A
2st Stage Capacity BTUH (ICS) (c,d) :	N/A
1st Stage Temp. Rise (Min.-Max.) :	30-60
2nd Stage Temp. Rise (Min.-Max.):	N/A
AFUE (%) (c,d):	80

BLOWER DRIVE

Drive:	Direct
No. Used:	1
Motor HP:	1.0
Speed RPM:	1075
Phase:	1
FLA:	10.9

FILTERS

Type:	High Velocity
Furnished:	No
Recommended	1 - 20"x25"x1"

WEIGHT / DIMENSIONS

Shipping:	144.0 lb
Net:	136.0 lb
Dimension (Crated):	35 1/2"x23"x30 7/8"

Notes:
(a For U.S. applications, above input ratings (BTUH) are up to 2,000 feet, derate 4 % per 1,000 feet for elevations above 2,000 feet above sea level. For Canadian applications, above input ratings (BTUH) are up to 4,500 feet, derate 4 % per 1,000 feet for elevations above 4,500 feet above sea level.
(b) Central Furnace heating designs are certified to ANSI Z21.47 / CSA 2.3 - latest edition.
(c) Based on U.S. government standard tests.
(d) Refer to the Vent Length Table in the Installer's Guide.
(e The above wiring specifications are in accordance with National Electrical Code; however, installations must comply with local codes.

4TXCD009

DIMENSION (A):	30 11/16"
DIMENSION (B):	21"
DIMENSION (C):	20 1/8"
DIMENSION (D):	19 1/4"
MATCH FURNACE WIDTH:	24 1/2"
GAS:	3/4" BRAZE
LIQUID:	3/8" BRAZE
WEIGHT:	68.0 lb

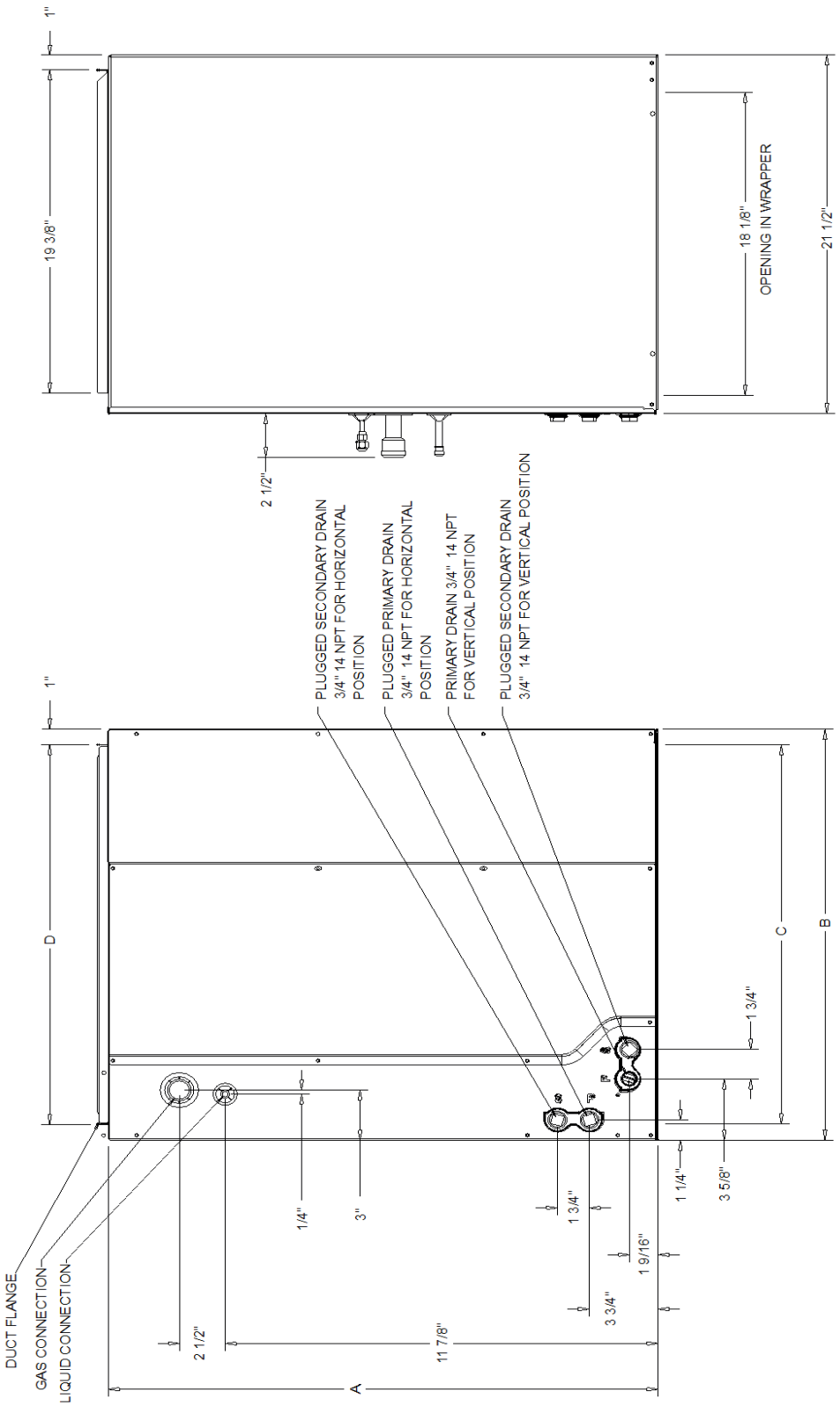

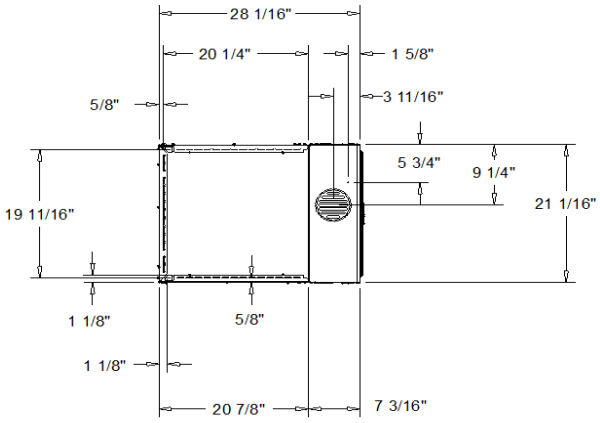

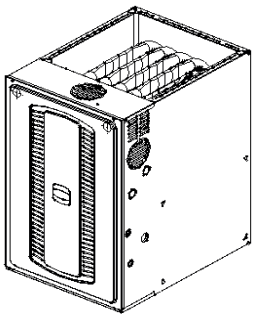

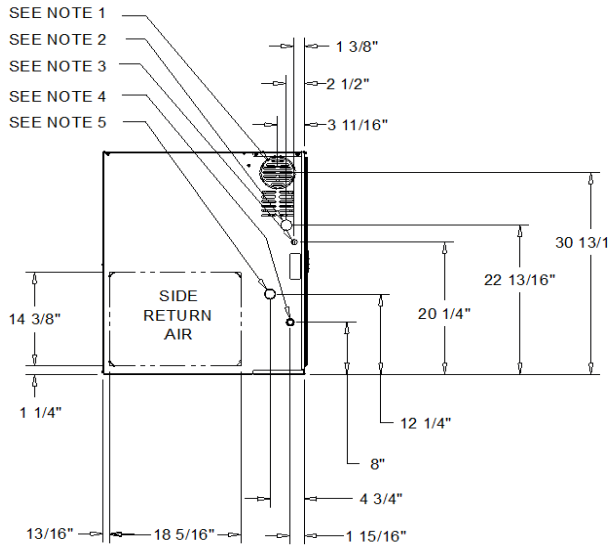

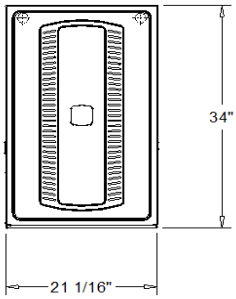

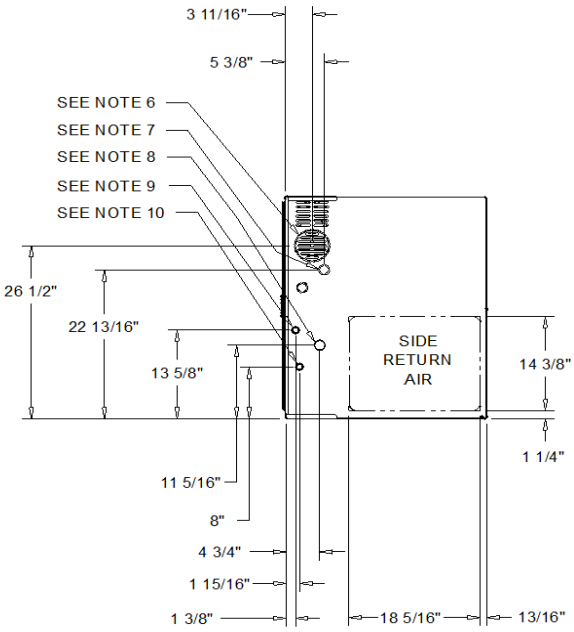

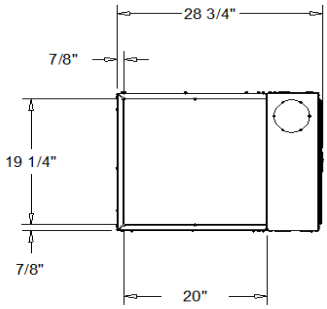

NOTES:
1) 5" FLUE OUTLET
2) 1 5/8" DIA GAS SUPPLY
3) 7/8" ELECTRICAL WIRES
4) 7/8" THERMOSTAT WIRES
5) NOT USED
6) 5" FLUE OUTLET
7) 1 5/8" DIA GAS SUPPLY (ALTERNATE)
8) NOT USED
9) 7/8" ELECTRICAL WIRES (ALTERNATE)
10) 7/8" THERMOSTAT WIRES (ALTERNATE)
11) VERIFY WEIGHT, CONNECTION, AND ALL DIMENSION WITH INSTALLER DOCUMENTS BEFORE INSTALLATION

S8X1 C CABINET FURNACE

UNIT DRAWING

Trane Precedent Gas/Electric Packaged Rooftop

Unit Overview - YSC036G3EL

Application	Unit Size	Supply Fan		External Dimensions (in.)			Operating Weight		EER	IEER/SEER	Elevation
		Airflow	External Static Pressure	Height	Width	Length	Minimum	Maximum			
DX cooling, gas heat	3 Ton (036)	1200 cfm	0.500 in H2O	40.920 in	44.280 in	69.840 in	472.0 lb	747.0 lb	12.00	14.00	

Unit Features

Condenser coil protection	Std condenser coil w/hail guard



Unit Electrical

Voltage/phase/hertz	208-230/60/3
MCA	20.00 A
MOP	30.00 A

Controls

Unit Controls	Electro mechanical controls

Cooling Section

Entering Dry Bulb	80.00 F	**Capacity**	
Entering Wet Bulb	67.00 F	**Gross Total**	37.00 MBh
Ambient Temp	95.00 F	**Gross Sensible**	29.81 MBh
Leaving Coil Dry Bulb	57.20 F	**Net Total**	35.97 MBh
Leaving Coil Wet Bulb	57.20 F	**Net Sensible**	28.77 MBh
Leaving Unit Dry Bulb	58.99 F	**Fan Motor Heat**	0.77 MBh
Leaving Unit Wet Bulb	57.89 F	**Refrig Charge-circuit 1**	3.2 lb
Refrigeration System Options			
Leaving Dew Point	57.21 F		

Heating Section

Heat Type	Gas Heat
Heating Stages	2
Output Heating Capacity	64.80 MBh
Output Heating Capacity with Fan	66.05 MBh
Heating EAT	70.00 F
Heating LAT	120.20 F
Heating Temp Rise	50.20 F

Fan Section

Indoor Fan Data		**Outdoor Fan Data**	
Type	FC Centrifugal	**Type**	Propeller
Drive Type	Direct	**Fan Quantity**	1
Evap Fan FLA	5.70 A	**Drive Type**	Direct
Indoor Fan Performance		**Outdoor Fan Performance**	
Airflow	1200 cfm	**Condenser Fan FLA**	1.10 A
Design ESP	0.500 in H2O		
Component SP	0.000 in H2O		
Total SP	0.500 in H2O		
Supply Motor Horsepower	0.750 hp		
Indoor Motor Operating Power	0.40 bhp		
Indoor Motor Power	0.30 kW		
Indoor RPM	918 rpm		

Compressor Section

Power	2.45 kW
Circuit 1 RLA	10.40 A
Circuit 2 RLA	0.00 A

Accessories

Fresh air selection	Manual outside air damper 0-50%

Acoustics

Sound Path	63 Hz	125 Hz	250 Hz	500 Hz	1 kHz	2 kHz	4 kHz	8 kHz
Ducted Discharge	89 dB	71 dB	68 dB	59 dB	55 dB	50 dB	45 dB	38 dB
Ducted Inlet	89 dB	72 dB	60 dB	53 dB	48 dB	44 dB	42 dB	37 dB
Outdoor Noise	79 dB	85 dB	79 dB	79 dB	77 dB	71 dB	67 dB	58 dB

Note:Ducted Inlet and Ducted Discharge Sound Power Levels are in accordance with AHRI 260.
Note:Outdoor Sound Power Levels are in accordance with AHRI 270.

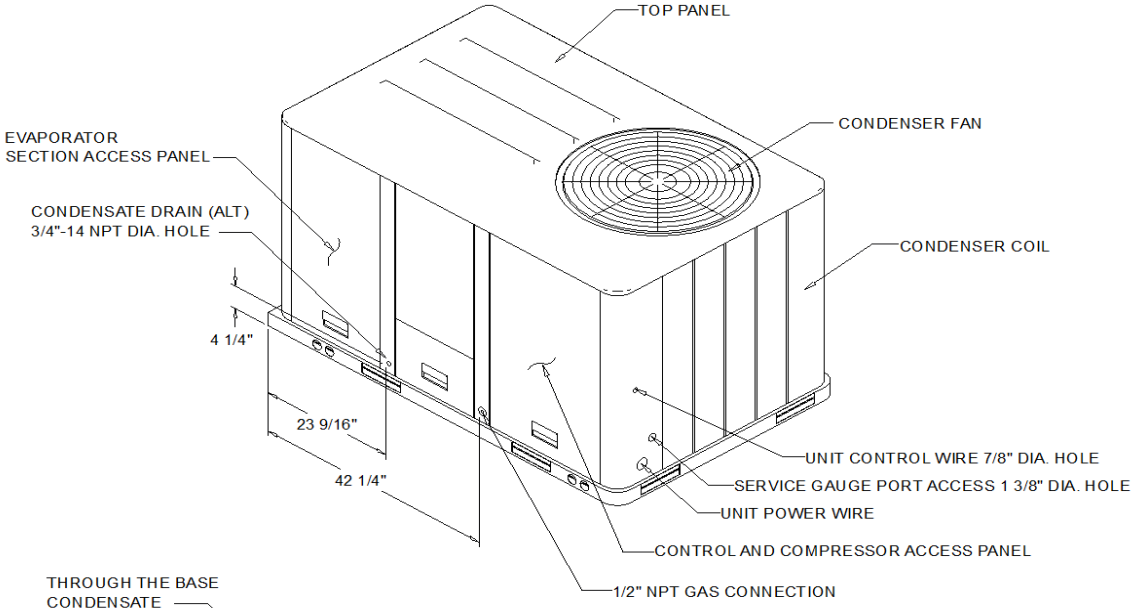

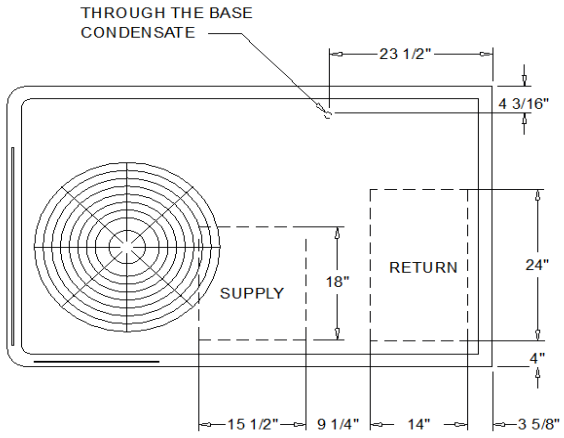

NOTES:
1. THRU -THE -BASE GAS AND ELECTRICAL IS NOT STANDARD ON ALL UNITS.
2. VERIFY WEIGHT, CONNECTION, AND ALL DIMENSION WITH INSTALLER DOCUMENTS BEFORE INSTALLATION

PLAN VIEW UNIT

DIMENSION DRAWING

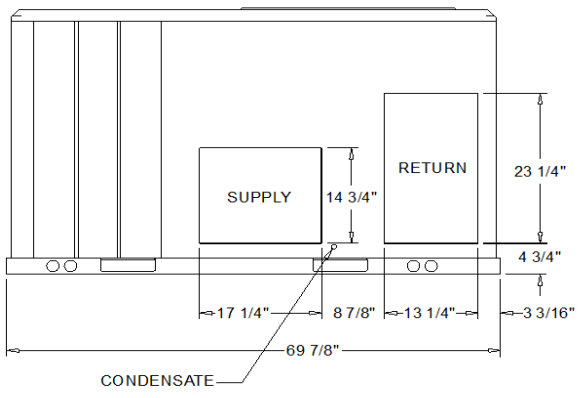

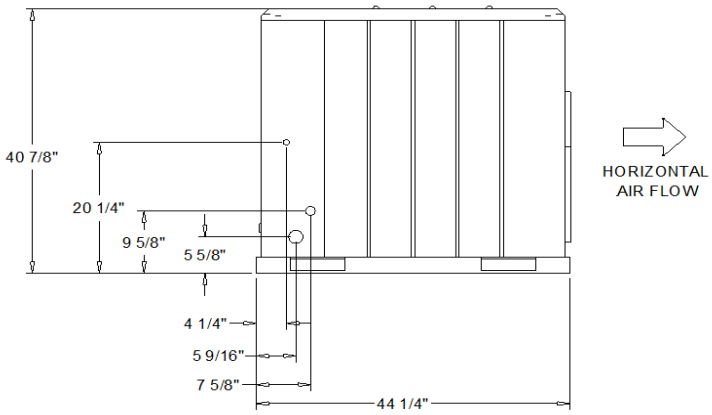

PACKAGED GAS / ELECTRICAL

DIMENSION DRAWING

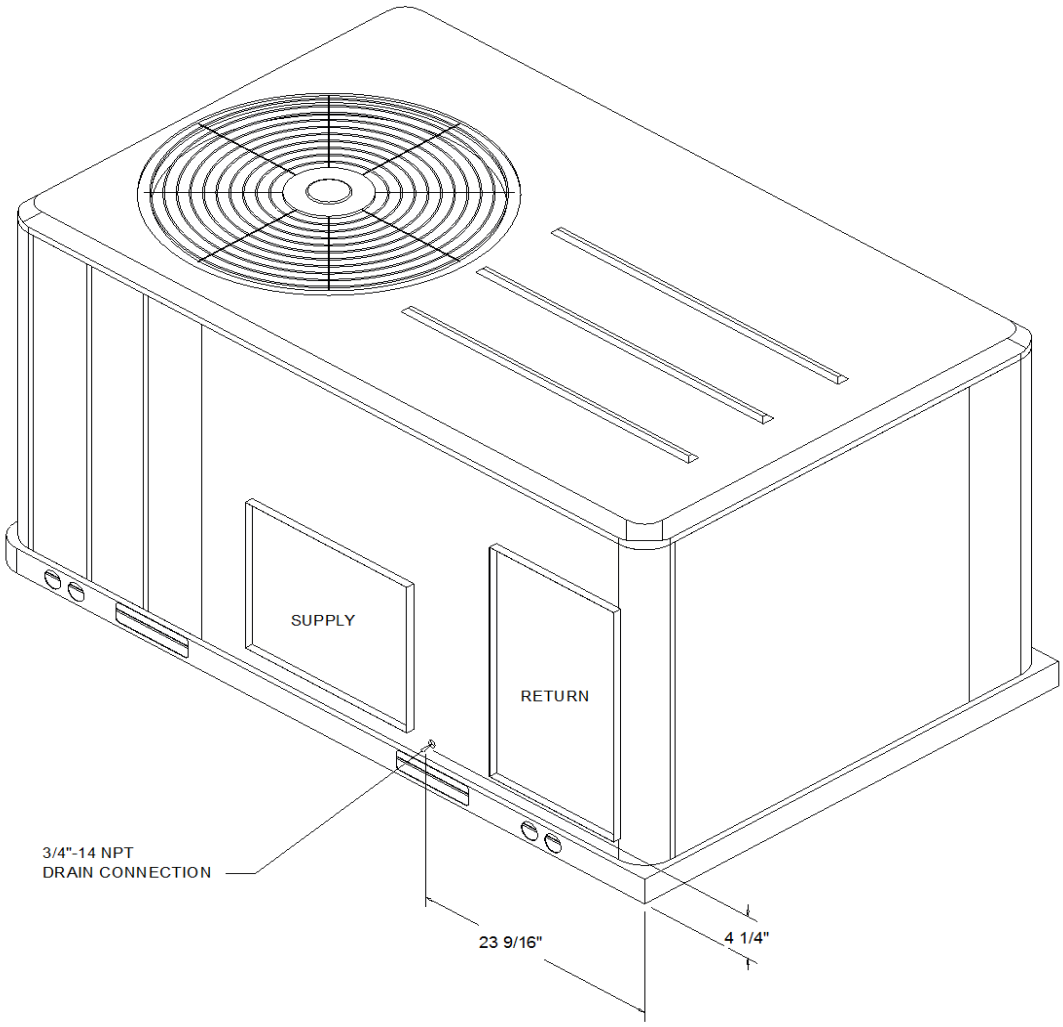

ISOMETRIC-PACKAGED COOLING

PACKET 12.59 September 24, 2024

ELECTRICAL / GENERAL DATA

GENERAL (2)(4)(6)

		Oversized Motor	
Model:	YSC036G		
Unit Operating Voltage:	187-253	MCA:	N/A
Unit Primary Voltage:	208	MFS:	N/A
Unit Secondary Voltage	230	MCB:	N/A
Unit Hertz:	60		
Unit Phase:	3		

Standard Motor		Field Installed Oversized Motor	
MCA:	20.0	MCA:	N/A
MFS:	30.0	MFS:	N/A
MCB:	30.0	MCB:	N/A

HEATING PERFORMANCE

HEATING - GENERAL DATA

Heating Model:	Low
Heating Input (BTU):	80,000/56,000
Heating Output (BTU):	64,800/45,360
No. Burners:	2
No. Stages	2

Gas Inlet Pressure

Natural Gas (Min/Mix):	4 1/2"/14"
LP (Min/Max)	11"/14"
Gas Pipe Connection Size:	1/2"

INDOOR MOTOR

Standard Motor		Oversized Motor		Field Installed Oversized Motor	
Number:	1	Number:	N/A	Number:	
Horsepower:	0.75	Horsepower:	N/A	Horsepower:	
Motor Speed (RPM):	--	Motor Speed (RPM):	N/A	Motor Speed (RPM):	
Phase	1	Phase	N/A	Phase	
Full Load Amps:	5.7	Full Load Amps:	N/A	Full Load Amps:	
Locked Rotor Amps	--	Locked Rotor Amps	N/A	Locked Rotor Amps	

COMPRESSOR Circuit 1/2

Number:	1
Horsepower:	2.8
Phase:	3
Rated Load Amps:	10.4
Locked Rotor Amps	73.0

OUTDOOR MOTOR

Number:	1
Horsepower:	0.25
Motor Speed (RPM):	1100
Phase:	3
Full Load Amps:	1.1
Locked Rotor Amps	3.6

POWER EXHAUST ACCESSORY (3,7)

(Field Installed Power Exhaust)

Phase:	N/A
Horsepower:	N/A
Motor Speed (RPM):	N/A
Full Load Amps:	N/A
Locked Rotor Amps:	N/A

FILTERS

Type:	Throwaway
Furnished:	Yes
Number	2
Recommended	20"x35"x2"

REFRIGERANT (2)

Type

Factory Charge

Circuit #1	3.2 lb
Circuit #2	N/A

NOTES:

1. Maximum (HACR) Circuit Breaker sizing is for installations in the United States only.
2. Refrigerant charge is an approximate value. For a more precise value, see unit nameplate and service instructions.
3. Value does not include Power Exhaust Accessory.
4. Value includes oversized motor.
5. Value does not include Power Exhaust Accessory.
6. EER is rated at AHRI conditions and in accordance with DOE test procedures.
7. Installation of this power exhaust kit will affect unit level MCA and could affect MOP sizing having a direct impact on existing field wiring and unit protection devices. The change in MCA/MOP is the sole responsibility of the field installing party. Trane will not issue new nameplates as a result of this power exhaust accessory installation. FLA of the power exhaust kit option must be added to the MCA of the unit for building supply conductor sizing determination.

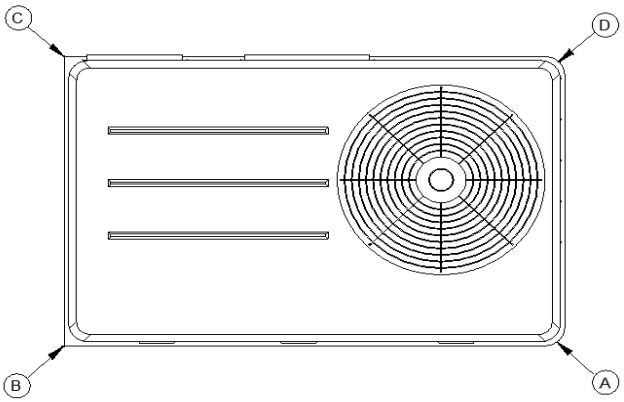

PACKAGED GAS / ELECTRICAL

CORNER WEIGHT

INSTALLED ACCESSORIES NET WEIGHT DATA

ACCESSORY	WEIGHTS
ECONOMIZER	
MOTORIZED OUTSIDE AIR DAMPER	
MANUAL OUTSIDE AIR DAMPER	16.0 lb
BAROMETRIC RELIEF	
OVERSIZED MOTOR	
BELT DRIVE MOTOR	
POWER EXHAUST	
THROUGHT THE BASE ELECTRICAL/GAS (FIOPS)	
UNIT MOUNTED CIRCUIT BREAKER (FIOPS)	
UNIT MOUNTED DISCONNECT (FIOPS)	
POWERED CONVENIENCE OUTLET (FIOPS)	
HINGED DOORS (FIOPS)	
HAIL GUARD	12.0 lb
SMOKE DETECTOR, SUPPLY / RETURN	
NOVAR CONTROL	
STAINLESS STEEL HEAT EXCHANGER	
REHEAT	
ROOF CURB	

BASIC UNIT WEIGHTS		CORNER WEIGHTS				CENTER OF GRAVITIY	
SHIPPING	NET	A	193.0 lb	C	45.0 lb	(E) LENGHT	(F) WIDTH
577.0 lb	472.0 lb	B	178.0 lb	D	55.0 lb	33"	9"

NOTE:
1. All weights are approximate.
2. Weights for options that are not list refer to Installation guide.
3. The actual weight are listed on the unit nameplate.
4. Refer to unit nameplate and installation guide for weights before scheduling transportation and installation of unit.
5. The weight shown represents the typical unit operating weight for the configuration selected. Estimated at +/- 10 % of the nameplate weight. .
6. Verify weight, connection, and all dimension with installer documents before installation.
7. Corner weights are given for information only.
8. Net/Shipping weight of optional accessories should be added to unit weight when ordering factory or field installed accessories.

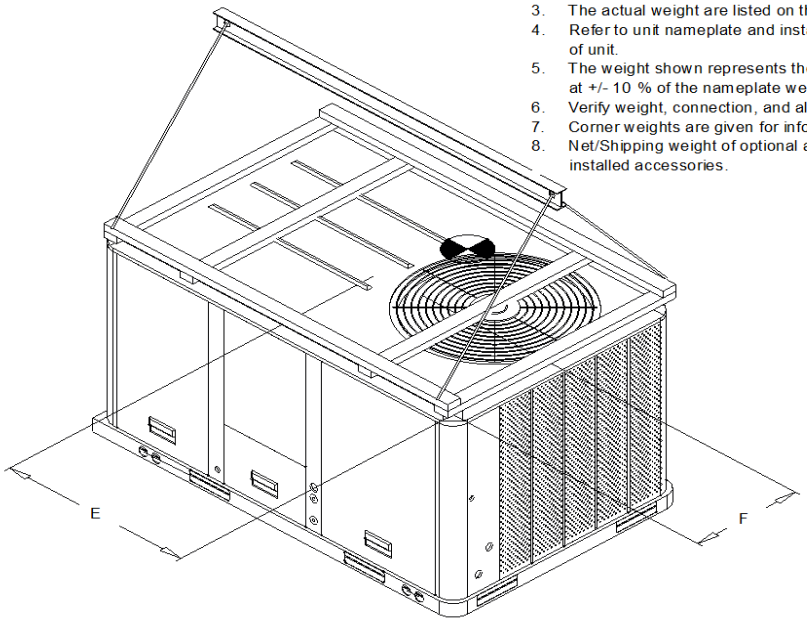

PACKAGED GAS / ELECTRICAL

RIGGING AND CENTER OF GRAVITY

CLEARANCE FROM TOP OF UNIT 72"

CLEARANCE 36"

CLEARANCE 48"

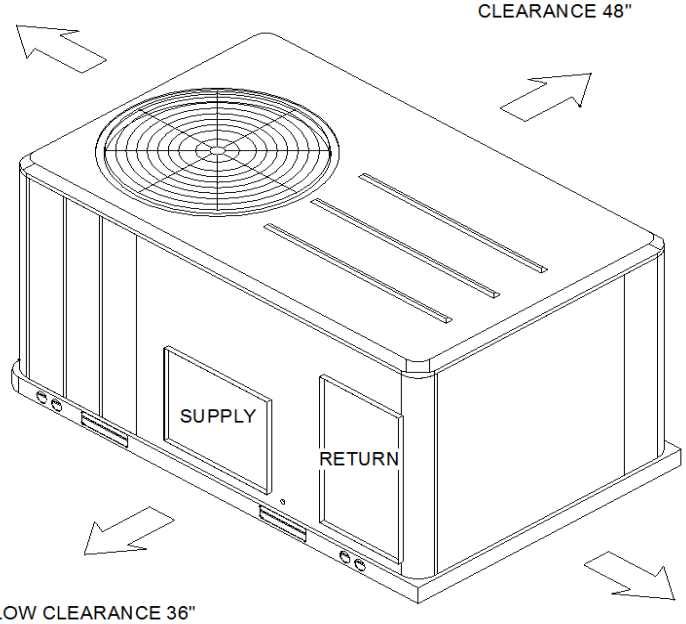

DOWNFLOW CLEARANCE 36"

HORIZONTAL CLEARANCE 18"

CLEARANCE 36"

PACKAGED GAS / ELECTRIC

CLEARANCE

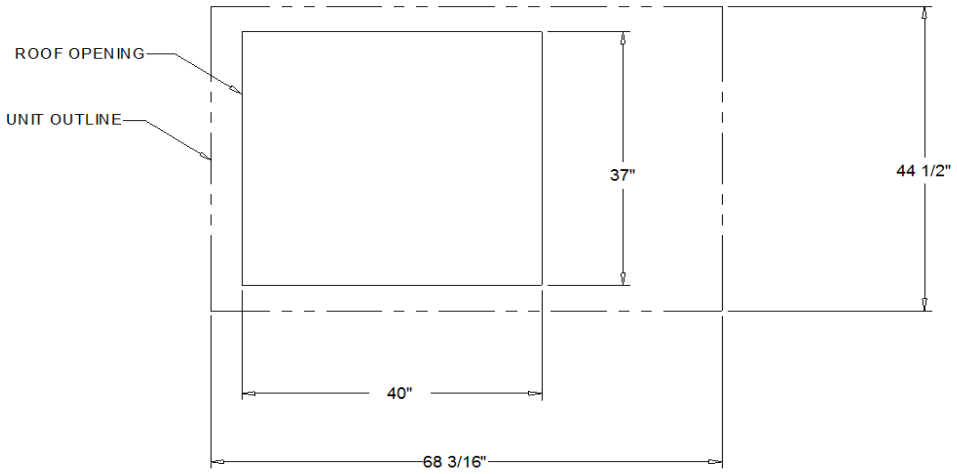

PACKAGED GAS / ELECTRIC

DOWNFLOW TYPICAL ROOF OPENING

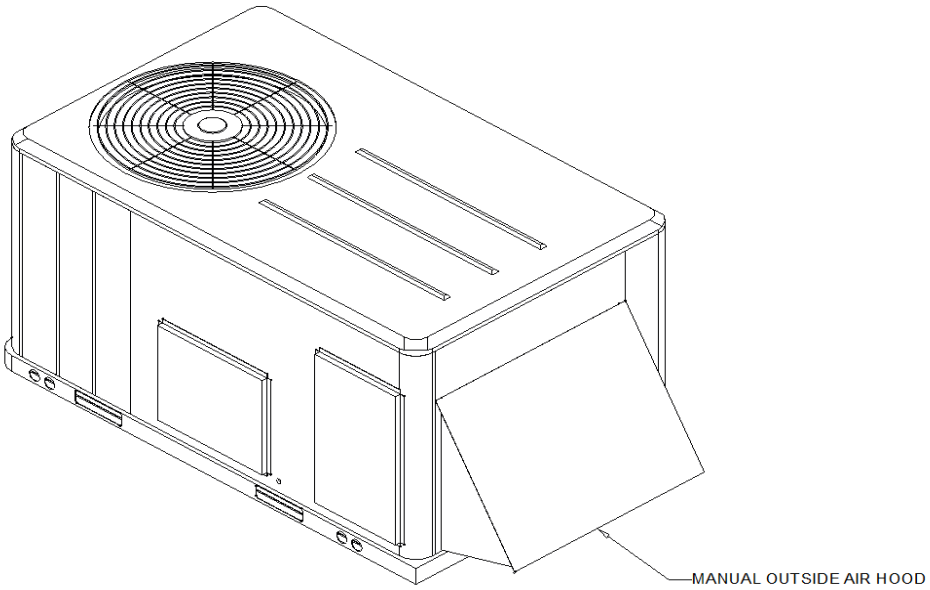

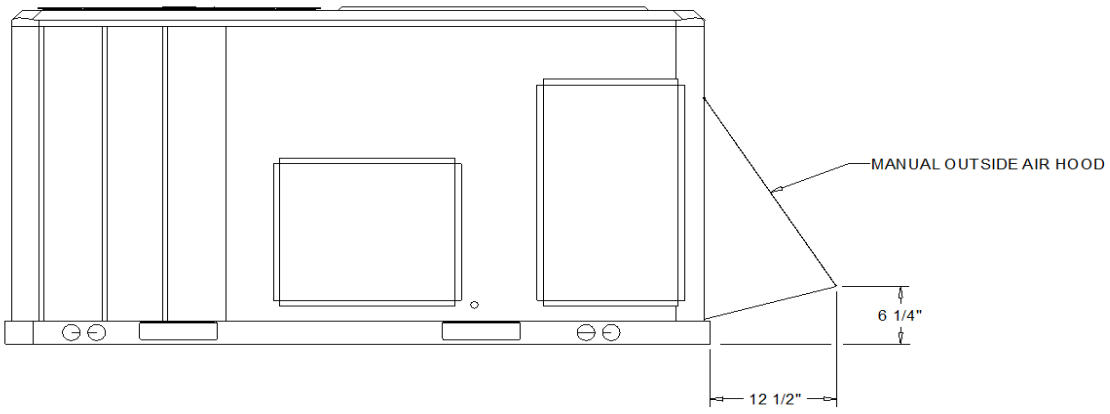

ACCESSORY - MANUAL OUTSIDE AIR HOOD

First Service AC Contractors

Contractor's Name

PROPOSAL
RFP #24006307

To: Purchasing Manager
City of Midland
Midland, Texas

Gentlemen: The undersigned bidder, having examined the plans, specifications and contract documents, the location of the proposed work and being fully advised as to the extent and character of the work proposes to furnish all materials, equipment and to perform all labor and work necessary for the complete work described by and in accordance with the attached plans, specifications and contract for the sum of:

Materials Portion Incorporated Into Project $77,322.00 DOLLARS

Labor Portion Incorporated Into Project $28,700.00 DOLLARS

Other Costs Not Incorporated Into Project _____ DOLLARS

Total Proposal $106,022.00 DOLLARS

The undersigned bidder hereby declares that he has visited the site of the work and has carefully examined the Contract Documents pertaining to the work covered by the above bid and he further agrees to commence work within ten (10) days after the date of written notice to do so and to substantially complete same within 30 calendar days.

VENDOR CONTACT:
All potential vendors shall direct ALL questions, areas for bid clarification and specification verification to the Purchasing Agent IN WRITING, via mail or fax as follows:

The City Of Midland
Office of the Purchasing Manager
P.O. Box 1152
Midland, TX 79702

OR

FAX: (432) 685-0523

E-mail: purchasing@midlandtexas.gov

All vendors on the bid list will then be notified of the questions and presented an answer. Verbal responses shall not be considered binding.

NOTE: Bid and Proposal terms are interchangeable.

AWARD
If the Contract is awarded, it will be awarded to either the lowest responsible bidder, or to the bidder who provides goods or services at the best value for the City of Midland. In determining the best value for the City of Midland, the City of Midland may consider the criteria enumerated in Section 252.043 of the Texas Local Government Code.

Public Information. To the extent that Bidder is submitting a bid for a contract described by Section 552.371 of the Texas Government Code, Bidder agrees as follows in accordance with Section 552.372(b) of the Texas Government Code: The requirements of Subchapter J, Chapter 552, Government Code, may apply to this bid, and the contractor or vendor agrees that the contract can be terminated if the contractor or vendor knowingly or intentionally fails to comply with a requirement of that subchapter.

BID WAIVERS:

A. <u>WAIVER OF ATTORNEY FEES</u>: BY SIGNING THIS PROPOSAL, BIDDER AGREES TO WAIVE AND DOES HEREBY KNOWINGLY, CONCLUSIVELY, VOLUNTARILY AND INTENTIONALLY WAIVE ANY CLAIM IT HAS OR MAY HAVE IN THE FUTURE AGAINST THE CITY, REGARDING THE AWARD OF ATTORNEY'S FEES, WHICH ARE IN ANY WAY RELATED TO THE CONTRACT, OR THE CONSTRUCTION, INTERPRETATION OR BREACH OF THE CONTRACT. THE BIDDER SPECIFICALLY AGREES THAT IF THE BIDDER BRINGS OR COMMENCES ANY LEGAL ACTION OR PROCEEDING RELATED TO THIS CONTRACT, THE CONSTRUCTION, INTERPRETATION, VALIDITY OR BREACH OF THIS CONTRACT, INCLUDING BUT NOT LIMITED TO ANY ACTION PURSUANT TO THE PROVISIONS OF THE TEXAS UNIFORM DECLARATORY JUDGMENTS ACT (TEXAS CIVIL PRACTICE AND REMEDIES CODE SECTION 37.001, ET SEQ., AS AMENDED), OR CHAPTER 271 OF THE TEXAS LOCAL GOVERNMENT CODE, THE BIDDER AGREES TO ABANDON, WAIVE AND RELINQUISH ANY AND ALL RIGHTS TO THE RECOVERY OF ATTORNEY'S FEES TO WHICH BIDDER MIGHT OTHERWISE BE ENTITLED.

BIDDER AGREES THAT THIS IS THE VOLUNTARY AND INTENTIONAL RELINQUISHMENT AND ABANDONMENT OF A PRESENTLY EXISTING KNOWN RIGHT. THE BIDDER ACKNOWLEDGES THAT IT UNDERSTANDS ALL TERMS AND CONDITIONS OF THE CONTRACT. THE BIDDER FURTHER ACKNOWLEDGES AND AGREES THAT THERE WAS AND IS NO DISPARITY OF BARGAINING POWER BETWEEN THE CITY AND THE BIDDER.

THIS SECTION SHALL NOT BE CONSTRUED OR INTERPRETED AS A WAIVER OF SOVEREIGN IMMUNITY.

THE BIDDER AND THE CITY ARE RELYING ON THEIR OWN JUDGMENT. EACH PARTY HAD THE OPPORTUNITY TO DISCUSS THIS CONTRACT WITH COMPETENT LEGAL COUNSEL PRIOR TO ITS EXECUTION.

B. WAIVER: BY SUBMITTING A BID, THE BIDDER AGREES TO WAIVE AND DOES HEREBY VOLUNTARILY AND INTENTIONALLY WAIVE, ABANDON AND RELINQUISH ANY CLAIM THE BIDDER HAS OR MAY HAVE IN THE FUTURE AGAINST THE CITY OF MIDLAND, TEXAS, AND THE CITY'S EMPLOYEES, AGENTS AND OFFICERS, ARISING OUT OF OR IN ANY WAY CONNECTED WITH THE FOLLOWING:

1. **THE ADMINISTRATION, EVALUATION OR RECOMMENDATION OF ANY BID;**
2. **WAIVER OR DELETION OF ANY OF THE REQUIREMENTS UNDER THE BID DOCUMENTS OR THE CONTRACT DOCUMENTS;**
3. **ACCEPTANCE OR REJECTION OF ANY BIDS; OR**
4. **AWARD OF THE CONTRACT.**

BY SUBMITTING A BID, THE BIDDER ACKNOWLEDGES THAT THE BIDDER UNDERSTANDS ALL OF THE TERMS OF THE BIDDING DOCUMENTS AND CONSENTS TO THE BIDDING PROCESS AND THE POSSIBILITY OF A NEGATIVE ASSESSMENT. BY SUBMITTING A BID, THE BIDDER ACKNOWLEDGES AND AGREES THAT THERE WAS AND IS NO DISPARITY OF BARGAINING POWER BETWEEN THE BIDDER AND THE CITY OF MIDLAND, TEXAS. THE BIDDER AGREES THAT THIS IS THE INTENTIONAL RELINQUISHMENT OF A PRESENTLY

EXISTING KNOWN RIGHT. BY SIGNING THE REQUEST FOR BID AND/OR BELOW, YOUR COMPANY AGREES TO THE ABOVE WAIVER(S).

C. Notice of Alleged Breach; Statutory Prerequisites: As a condition precedent to filing suit for alleged damages incurred by an alleged breach of an express or implied provision of this Contract, Bidder or his legal representative, shall give the City Manager, or any other reasonable official of the City, notice in writing (consisting of one original and seven copies of notice attached to a copy of this Contract) of such damages, duly verified, within one-hundred fifty (150) days after the same has been sustained. The discovery rule does not apply to the giving of this notice. The notice shall include when, where and how the damages occurred, the apparent extent thereof, the amount of damages sustained, the amount for which the Bidder will settle, the physical and mailing addresses of Bidder at the time and date the claim was presented and the physical and mailing addresses of Bidder for the six months immediately preceding the occurrence of such damages, and the names and addresses of the witnesses upon whom the Bidder relies to establish its claim; and a failure to so notify the City Manager within the time and manner provided herein shall exonerate, excuse and except the City from any liability whatsoever. The City is under no obligation to provide notice to Bidder that Bidder's notice is insufficient. The City reserves the right to request reasonable additional information regarding the claim. Said additional information shall be supplied within thirty (30) days after receipt of notice.

The statutory prerequisites outlined herein constitute jurisdictional requirements pursuant to Section 271.154 of the Texas Local Government Code and Section 311.034 of the Texas Government Code. Notwithstanding any other provision, Bidder's failure to comply with the requirements herein shall perpetually bar Bidder's claim for damages under Chapter 271 of the Texas Local Government Code, and Section 311.034 of the Texas Government Code, regardless if the City has actual or constructive notice or knowledge of said claim or alleged damages. Bidder agrees that the requirements of this entire Contract are reasonable.

By Signing below, your company agrees to the above waiver(s). If this form is not signed and included with your bid documents your bid will be considered non-responsive and will be rejected.

GOVERNMENTAL IMMUNITY: By executing this agreement CITY is not waiving its right of governmental immunity. CITY is retaining its immunity from suit. CITY is not granting consent to be sued by legislative resolution or action. **THERE IS NO WAIVER OF GOVERNMENTAL IMMUNITY.**

First Service AC Contractors Inc		432-685-0003
Bidder	Authorized Signature	Telephone
3009 Garden City Highway	Amy Standard	432-685-3629
Address, City and State	Please Print above Name	Fax

Bidder's Enclosure Check List: (Bidder - Please review the following list and check to ensure that you have included the documents with your bid.)

☑ PROOF OF AUTOMOBILE, WORKER'S COMPENSATION AND GENERAL LIABILITY INSURANCE COVERAGE AS REQUIRED BY THE TERMS OF THE CONTRACT. (**Upon award and prior to execution of the contract The City of Midland will have to be added to the policy as an additional insured and a certificate issued reflecting that provision) including a waiver of subrogation as stated in the contract)**

PLEASE NOTE:

FAILURE TO INCLUDE ANY OF THE REQUIRED DOCUMENTS ON THE CHECK LIST, MAY CAUSE REJECTION OF YOUR BID.

***FAILURE TO PROVIDE LIABILITY OR WORKER'S COMPENSATION INSURANCE AND SUBSEQUENT CERTIFICATES; OR,**

PACKET 12:00 September 24, 2024

PAYMENT AND/OR PERFORMANCE BONDS AS REQUIRED BY THE CONTRACT MAY CAUSE FORFEITURE OF YOUR BID BOND OR OTHER SURETY (I.E.- CASH OR CASHIERS CHECK).

EXHIBIT C

Bonding Requirements

The successful bidder shall be required to furnish a Performance & Payment Bond* for bids in excess of $50,000.00, in an amount equal to one hundred percent (100%) of the total contract price, such bond to be executed in five (5) original counterparts by a Corporate Surety authorized to do business in the State of Texas and acceptable to the City of Midland. All bonds must be executed on forms contained in these contract documents. The form of agreement which the successful bidder, as contractor, will be required to execute is also included herewith. The form of agreement and the form of the bonds should be carefully examined by the bidder.

A certified check, cashier's check, bank money order, or irrevocable letter of credit issued by a bank satisfactory to the City, or a bidder's bond on the form provided, in the amount of five percent (5%) of the largest possible lump sum bid submitted, payable without recourse to the City, must accompany the bidder's proposal, as a guaranty that the bidder will enter a contract and execute the required payment bond and guaranty in the forms provided within fifteen (15) days after notice of award of contract to him. Bids or proposals without the required bid guaranty will not be considered. All bid sureties and payment bonds shall name the City of Midland as Obligee.

*A cash security such as a cashier's check or irrevocable letter of credit issued by a bank satisfactory to the City for 100 % of the contract amount may be supplied in lieu of the Performance and Payment Bonds. The check will be returned un-cashed upon satisfactory completion of the work and evidence of payment of all obligations due for the contract.

Bid Bond

Surety Department

KNOW ALL MEN BY THESE PRESENTS,

That we, **First Service A/C Contractors, Inc.**, as Principal, hereinafter called the Principal, and the **Swiss Re Corporate Solutions America Insurance Corporation**, a Corporation created and existing under the laws of the State of **Missouri**, whose principal office is in Kansas City, MO, as Surety, hereinafter called the Surety, are held and firmly bound unto the **City of Midland, Texas**, as Obligee, hereinafter called the Obligee, in the sum of **Five Percent (5%) of the Greatest Amount Bid** ($----5%----), for the payment of which sum, well and truly to be made, the said Principal and the said Surety, bind ourselves, our heirs, executors, administrators, successors and assigns, jointly and severally, firmly by these presents.

RFP # 24006307 HVAC for MLK Center (BT-24CH)

NOW THEREFORE, if the Obligee shall accept the bid of the Principal and the Principal shall enter into a contract with the Obligee in accordance with the terms of such bid, and give such bond or bonds as may be specified in the bidding or contract documents with good and sufficient surety for the faithful performance of such contract and for the prompt payment of labor and material furnished in the prosecution thereof, or in the event of the failure of the Principal to enter such contract and give such bond or bonds, if the Principal shall pay to the Obligee the difference not to exceed the penalty hereof between the amount specified in said bid and such larger amount for which the Obligee may in good faith contract with another party to perform the work covered by said bid, then this obligation shall be null and void, otherwise to remain in full force and effect.

Signed and sealed this **11th** day of **September**, 20**24**.

Attest:

First Service A/C Contractors, Inc.
(Principal)

By: _____ By _____ (SEAL)

FIRST SERVICE AIR CONDITIONING CONTRACTORS, INC. SEAL

Witness:

Swiss Re Corporate Solutions America Insurance Corporation

_____ By _____
Kevin J. Dunn, Attorney-in-Fact (SEAL)

Form S-3266-4 Printed in U.S.A. 12-70



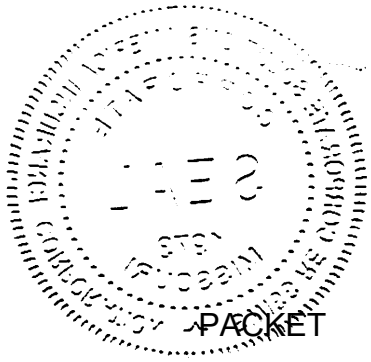

SWISS RE CORPORATE SOLUTIONS

SWISS RE CORPORATE SOLUTIONS AMERICA INSURANCE CORPORATION ("SRCSAIC")
SWISS RE CORPORATE SOLUTIONS PREMIER INSURANCE CORPORATION ("SRCSPIC")
WESTPORT INSURANCE CORPORATION ("WIC")

GENERAL POWER OF ATTORNEY

KNOW ALL MEN BY THESE PRESENTS, THAT SRCSAIC, a corporation duly organized and existing under laws of the State of Missouri, and having its principal office in the City of Kansas City, Missouri, and SRCSPIC, a corporation organized and existing under the laws of the State of Missouri and having its principal office in the City of Kansas City, Missouri, and WIC, organized under the laws of the State of Missouri, and having its principal office in the City of Kansas City, Missouri, each does hereby make, constitute and appoint:

W. LAWRENCE BROWN, TRACY TUCKER, KEVIN J. DUNN, STEVEN TUCKER, ROBERTA H. ERB,

and DOUGLASS A. REED

JOINTLY OR SEVERALLY

Its true and lawful Attorney(s)-in-Fact, to make, execute, seal and deliver, for and on its behalf and as its act and deed, bonds or other writings obligatory in the nature of a bond on behalf of each of said Companies, as surety, on contracts of suretyship as are or may be required or permitted by law, regulation, contract or otherwise, provided that no bond or undertaking or contract or suretyship executed under this authority shall exceed the amount of:

ONE HUNDRED TWENTY FIVE- MILLION ($125,000,000.00) DOLLARS

This Power of Attorney is granted and is signed by facsimile under and by the authority of the following Resolutions adopted by the Boards of Directors of both SRCSAIC and SRCSPIC at meetings duly called and held on the 18th of November 2021 and WIC by written consent of its Executive Committee dated July 18, 2011.

"RESOLVED, that any two of the President, any Managing Director, any Senior Vice President, any Vice President, the Secretary or any Assistant Secretary be, and each or any of them hereby is, authorized to execute a Power of Attorney qualifying the attorney named in the given Power of Attorney to execute on behalf of the Corporation bonds, undertakings and all contracts of surety, and that each or any of them hereby is authorized to attest to the execution of any such Power of Attorney and to attach therein the seal of the Corporation; and it is

FURTHER RESOLVED, that the signature of such officers and the seal of the Corporation may be affixed to any such Power of Attorney or to any certificate relating thereto by facsimile, and any such Power of Attorney or certificate bearing such facsimile signatures or facsimile seal shall be binding upon the Corporation when so affixed and in the future with regard to any bond, undertaking or contract of surety to which it is attached."

SWISS RE CORPORATE SOLUTIONS AMERICA INSURANCE CORPORATION CORPORATE SEAL 1973 MISSOURI

SWISS RE CORPORATE SOLUTIONS PREMIER INSURANCE CORPORATION CORPORATE SEAL MISSOURI

By_____
Erik Janssens, Senior Vice President of SRCSAIC & Senior Vice President of SRCSPIC & Senior Vice President of WIC

By_____
Gerald Jagrowski, Vice President of SRCSAIC & Vice President of SRCSPIC & Vice President of WIC

WESTPORT INSURANCE CORPORATION CORPORATE SEAL MISSOURI

IN WITNESS WHEREOF, SRCSAIC, SRCSPIC, and WIC have caused their official seals to be hereunto affixed, and these presents to be signed by their authorized officers

this 6TH day of MARCH, 20 24

Swiss Re Corporate Solutions America Insurance Corporation
Swiss Re Corporate Solutions Premier Insurance Corporation
Westport Insurance Corporation

State of Illinois
County of Cook ss

On this 6TH day of MARCH, 20 24, before me, a Notary Public personally appeared Erik Janssens, Senior Vice President of SRCSAIC and Senior Vice President of SRCSPIC and Senior Vice President of WIC and Gerald Jagrowski, Vice President of SRCSAIC and Vice President of SPCSPIC and Vice President of WIC, personally known to me, who being by me duly sworn, acknowledged that they signed the above Power of Attorney as officers of and acknowledged said instrument to be the voluntary act and deed of their respective companies.

OFFICIAL SEAL
CHRISTINA MANISCO
NOTARY PUBLIC, STATE OF ILLINOIS
My Commission Expires March 28, 2026

Christina Manisco, Notary

I, Jeffrey Goldberg, the duly elected Senior Vice President and Assistant Secretary of SRCSAIC and SRCSPIC and WIC, do hereby certify that the above and foregoing is a true and correct copy of a Power of Attorney given by said SRCSAIC and SRCSPIC and WIC, which is still in full force and effect.
IN WITNESS WHEREOF, I have set my hand and affixed the seals of the Companies this 11th day of September, 20 24.

Jeffrey Goldberg, Senior Vice President & Assistant Secretary of SRCSAIC and SRCSPIC and WIC

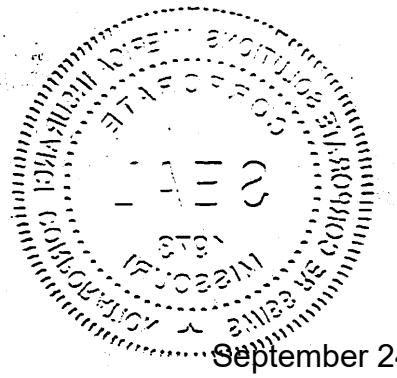

PAYMENT BOND

THE STATE OF TEXAS §

COUNTY OF MIDLAND § SURETY NO _____

KNOW ALL MEN BY THESE PRESENTS, THAT _____ of the City of _____ of the County of _____ and State of Texas as Principal, and _____, as Surety, are held and firmly bound unto the City of Midland, Texas, as Obligee, in the amount of _____ DOLLARS ($ _____) for the payment whereof the said Principal and Surety bind themselves, their heirs, administrators, executors, successors and assigns, jointly and severally, firmly by these presents.

WHEREAS, the Principal has entered into a certain written contract with the Obligee, dated the _____ day of _____, 20__, for the furnishing of materials, equipment to perform all labor and work necessary for _____, hereof as fully and to the same extent as if copied at length herein.

NOW, THEREFORE, the condition of the obligation is that if the said Principal shall pay all claimants supplying labor and material to him or a subcontractor in the prosecution of the work provided for in said contract, then this obligation shall be null and void; otherwise, it is to remain in full force and effect.

Surety, for value received, stipulates and agrees that no change, extension of time alteration or addition to the terms of the contract, or to the work performed there under, or the plans, specifications of drawings accompanying the same, or any assignment of the contract as may be provided for in the instructions to bidders, shall in anywise affect its obligation on this Bond, and it does waive notice of any such change, extension of

PERFORMANCE BOND

THE STATE OF TEXAS §

COUNTY OF MIDLAND § SURETY NO _____

KNOW ALL MEN BY THESE PRESENTS, THAT _____ (Hereinafter called the Principal[s]), as Principal(s), and _____ (Hereinafter called the Surety), as Surety, are held and firmly bound unto the City of Midland, Texas a home rule municipal corporation of Midland County, Texas, (hereinafter called the Obligee), in the amount of _____ DOLLARS ($ _____) for the payment whereof the said Principal and surety bind themselves, and their heirs, administrators, executors, successors and assigns, jointly and severally, firmly by these presents.

WHEREAS, the Principal has entered into a certain written contract with the Obligee, dated the _____day of _____ , 20___ , for the furnishing of materials and equipment to perform all labor and work necessary for the construction of _____ , specifically including in the scope of this work and bond, the additional maintenance guaranty provisions set forth in the contract conditions, which contract is hereby referred to and made a part hereof as fully and to the same extent as if copies at length herein, as well as the Principal's primary obligation to perform according to plans and specifications.

NOW, THEREFORE, THE CONDITION OF THIS OBLIGATION IS SUCH, that if the said Principal shall faithfully perform the work in accordance with the plans, specifications, instructions to bidder, general and special conditions and other contract documents, including any addendum thereto, then this obligation shall be void; otherwise to remain in full force and effect.

PROVIDED further that if any legal action be filed upon this Bond venue shall lie in Midland County, State of Texas.

Surety, for value received, stipulates and agrees that no change, extension of time, alteration or addition to the terms of the contract, or to the work performed thereunder, or the plans, specifications or drawings accompanying the same, or any assignment of the contract as may be provided for in the instructions to bidders, shall in anywise affect its obligation on this Bond, and it does waive notice of any such change, extension of time, alteration or addition to the terms of the contract, assignment thereof, or the work to be performed thereunder.

IN WITNESS WHEREOF, the said Principal and surety do sign and seal this instrument, this _____ day of _____ , 20___.

_____	_____
Principal	Surety
By _____	By _____
Address _____	Address _____
_____	_____
_____	_____

APPROVED AS TO FORM:

_____

City Attorney

NOTE: Attach Power of Attorney

time, alteration or addition to the terms of the contract, assignment thereof, or to the work to be performed there under.

IN WITNESS WHEREOF the said Principal and Surety have signed and sealed this instrument, this _____ day of _____ , 20__ .

_____	_____
Principal	Surety
By _____	By _____
Address _____	Address _____
_____	_____
_____	_____

APPROVED AS TO FORM:

_____

City Attorney

NOTE: Attach Power of Attorney

CONFLICT OF INTEREST QUESTIONNAIRE

FORM CIQ

For vendor doing business with local governmental entity

This questionnaire reflects changes made to the law by H.B. 23, 84th Leg., Regular Session.

This questionnaire is being filed in accordance with Chapter 176, Local Government Code, by a vendor who has a business relationship as defined by Section 176.001(1-a) with a local governmental entity and the vendor meets requirements under Section 176.006(a).

By law this questionnaire must be filed with the records administrator of the local governmental entity not later than the 7th business day after the date the vendor becomes aware of facts that require the statement to be filed. *See* Section 176.006(a-1), Local Government Code.

A vendor commits an offense if the vendor knowingly violates Section 176.006, Local Government Code. An offense under this section is a misdemeanor.

OFFICE USE ONLY

Date Received

1 **Name of vendor who has a business relationship with local governmental entity.**

N/A

2 ☐ **Check this box if you are filing an update to a previously filed questionnaire.** (The law requires that you file an updated completed questionnaire with the appropriate filing authority not later than the 7th business day after the date on which you became aware that the originally filed questionnaire was incomplete or inaccurate.)

3 **Name of local government officer about whom the information is being disclosed.**

_____

Name of Officer

4 **Describe each employment or other business relationship with the local government officer, or a family member of the officer, as described by Section 176.003(a)(2)(A). Also describe any family relationship with the local government officer. Complete subparts A and B for each employment or business relationship described. Attach additional pages to this Form CIQ as necessary.**

A. Is the local government officer or a family member of the officer receiving or likely to receive taxable income, other than investment income, from the vendor?

☐ Yes ☐ No

B. Is the vendor receiving or likely to receive taxable income, other than investment income, from or at the direction of the local government officer or a family member of the officer AND the taxable income is not received from the local governmental entity?

☐ Yes ☐ No

5 **Describe each employment or business relationship that the vendor named in Section 1 maintains with a corporation or other business entity with respect to which the local government officer serves as an officer or director, or holds an ownership interest of one percent or more.**

6 ☐ Check this box if the vendor has given the local government officer or a family member of the officer one or more gifts as described in Section 176.003(a)(2)(B), excluding gifts described in Section 176.003(a-1).

7

Signature of vendor doing business with the governmental entity

9-11-2024

Date

CONFLICT OF INTEREST QUESTIONNAIRE
For vendor doing business with local governmental entity

A complete copy of Chapter 176 of the Local Government Code may be found at http://www.statutes.legis.state.tx.us/Docs/LG/htm/LG.176.htm. For easy reference, below are some of the sections cited on this form.

Local Government Code § 176.001(1-a): "Business relationship" means a connection between two or more parties based on commercial activity of one of the parties. The term does not include a connection based on:

(A) a transaction that is subject to rate or fee regulation by a federal, state, or local governmental entity or an agency of a federal, state, or local governmental entity;

(B) a transaction conducted at a price and subject to terms available to the public; or

(C) a purchase or lease of goods or services from a person that is chartered by a state or federal agency and that is subject to regular examination by, and reporting to, that agency.

Local Government Code § 176.003(a)(2)(A) and (B):

(a) A local government officer shall file a conflicts disclosure statement with respect to a vendor if:

***

(2) the vendor:

(A) has an employment or other business relationship with the local government officer or a family member of the officer that results in the officer or family member receiving taxable income, other than investment income, that exceeds $2,500 during the 12-month period preceding the date that the officer becomes aware that

(i) a contract between the local governmental entity and vendor has been executed; or

(ii) the local governmental entity is considering entering into a contract with the vendor;

(B) has given to the local government officer or a family member of the officer one or more gifts that have an aggregate value of more than $100 in the 12-month period preceding the date the officer becomes aware that:

(i) a contract between the local governmental entity and vendor has been executed; or

(ii) the local governmental entity is considering entering into a contract with the vendor.

Local Government Code § 176.006(a) and (a-1)

(a) A vendor shall file a completed conflict of interest questionnaire if the vendor has a business relationship with a local governmental entity and:

(1) has an employment or other business relationship with a local government officer of that local governmental entity, or a family member of the officer, described by Section 176.003(a)(2)(A);

(2) has given a local government officer of that local governmental entity, or a family member of the officer, one or more gifts with the aggregate value specified by Section 176.003(a)(2)(B), excluding any gift described by Section 176.003(a-1); or

(3) has a family relationship with a local government officer of that local governmental entity.

(a-1) The completed conflict of interest questionnaire must be filed with the appropriate records administrator not later than the seventh business day after the later of:

(1) the date that the vendor:

(A) begins discussions or negotiations to enter into a contract with the local governmental entity; or

(B) submits to the local governmental entity an application, response to a request for proposals or bids, correspondence, or another writing related to a potential contract with the local governmental entity; or

(2) the date the vendor becomes aware:

(A) of an employment or other business relationship with a local government officer, or a family member of the officer, described by Subsection (a);

(B) that the vendor has given one or more gifts described by Subsection (a); or

(C) of a family relationship with a local government officer.

CITY OF MIDLAND

Consideration of Location of Bidder's Principal Place of Business
For Bids of $50,000 up to $100,000 for Services and $500,000 for Commodities
Affidavit of Eligibility

Pursuant to Texas Local Government Code 271.9051, in purchasing real property, personal property that is not affixed to real property, or services, if the City receives one or more bids from a bidder whose principal place of business is in the City of Midland and whose bid is within five percent (5%) of the lowest bid price received by the City from a bidder who is not a resident of the City of Midland, the City may enter into a contract with:

(1) the lowest bidder; or

(2) the bidder whose principal place of business is in the City of Midland if the City Council determines, in writing, that the local bidder offers the City the best combination of contract price and additional economic development opportunities for the City of Midland created by the contract award, including the employment of residents of the City of Midland and increased tax revenues to the City of Midland.

In order to receive consideration, bidders must submit this affidavit to:

Erika Martinez
Purchasing Manager
City of Midland
300 N. Loraine St.,
PO BOX 1152
Midland, TX 79702-1152

Complete all areas below. Incomplete affidavits may be rejected.

Local Business Name: First Service Plumbing Heating Air Conditioning

Local Address (must be within the City limits): 3009 Garden City Hwy

1. Is the above address the principal place of business for the business named above? ☑ Yes ☐ No
2. How many residents of the City of Midland are employed at the above business location? 36
3. Year your business was established in the City of Midland: 1952
4. If you collect sales tax for ANY class of customer, provide the following Reseller information:

   Reseller Permit Number: 75-1848103

   Company Name and Address (as it appears on permit):

   First Service AC Contractors Inc.
   3009 Garden City Highway
   Midland TX 79701
5. Does your business have more than one office in the State of Texas? ☐ Yes ☑ No
   If Yes, identify the office location considered as the point-of sale for the purpose of sales tax calculation:

   _____

   _____
6. Was the local business required to pay business and/or real property tax for the most recent tax year?

   ☑ Yes ☐ No

   If Yes, did the local business pay any of this tax to the City of Midland? ☑ Yes ☐ No

Under penalty of perjury, the undersigned states that the foregoing statements are true and correct. It is further acknowledged that any person, firm, corporation or entity intentionally submitting false information to the City in an attempt to qualify for eligibility shall be prohibited from bidding on City of Midland products and services for a period of one (1) year.

Authorized Signature: _____ Date: 9-11-2024

Printed Name and Title: Amy Standard General Manager

CITY OF MIDLAND

ADDENDUM 1

BID # 24006307

TO ALL BIDDERS ON THE SUBJECT BID:

ADDENDUM # 1

DATE: August 29, 2024

The following questions were raised by one or more of the proposers. The answers are provided as a matter of clarification for all proposers as follows:

Q1. Is it ok to get equivalent equipment that meets the same specifications or are we limited to the same equipment?

A1. Yes, it is okay to have equipment that meet or exceed specifications.

PLEASE RETURN THIS ADDENDUM WITH YOUR BID BY THE CLOSING DATE.

All other terms and conditions shall remain the same.

First Service Plumbing Heating Air Conditioning — Company Name

rauld@firstservice.org — Email

Raul Delgado — Bidder Authorized Signature

9/11/24 — Date

Raul Delgado — Please Print Above Name

432 685-0003 — Phone

CITY OF MIDLAND

ADDENDUM 2

BID # 24006307

TO ALL BIDDERS ON THE SUBJECT BID:

ADDENDUM # 2

DATE: September 6, 2024

The following questions were raised by one or more of the proposers. The answers are provided as a matter of clarification for all proposers as follows:

Q1: What is included in the scope of work?

A1: All items pertaining to the HVAC work.

Q2: Will contractors need to provide the transitions?

A2: Yes

Q3: Will contractor need to do ceiling grids?

A3: No, the City of Midland will do the ceiling grids.

Q4: Will contractor need to include the disconnects.

A4: Yes

Q5: Are there spec sheets or plans that can be sent over to us?

A: No spec sheets or plans are available for the building.

Q6: What is the required completion date?

A6: Not to exceed 30 days

Q7: What package units are on the ground, and what units are on the roof?

A7: Two 71/2 tons package units on the roof. 6 split systems condensers are on the roof. 2 condenser units on the ground for locker rooms.

Q8: Will new roof curbs be required for the package units located on the roof?

A8: Depending on the equipment that is being proposed and or if its available.

Q9: Where can the crane set up? Is this at our discretion, or are there authorized areas?

A9: All permits will be obtained by the contractor and responsible for all fees. Crane will be set on the east side of the building during closing hours

Q10: Will the current electrical breakers and circuits need to be upgraded?

A10: Current electrical breakers and circuits are sustainable by current Equipment. They will only be changed if equipment proposed will need an upgrade or down grade.

Q11: Is the HVAC contractor required to do any ductwork?

A11: Yes, ductwork required will be transitions for return air and supply.

Q12: What seer rating are you looking for (single stage, 2-stages, or variable speed)

A12: Standard is 15.5 or higher.

Q13: Confirm the voltage on all ten units is 240 / 3 phase?
A14: Contractor will be responsible for determining voltage.

PLEASE RETURN THIS ADDENDUM WITH YOUR BID BY THE CLOSING DATE.

All other terms and conditions shall remain the same.

First Service Plumbing Heating Air Conditioning — Company Name
rauld@firstservice.org — Email
Raul Delgado — Bidder Authorized Signature
9/11/24 — Date
Raul Delgado — Please Print Above Name
432 685-0003 — Phone

CITY OF MIDLAND

ADDENDUM 3

BID # 24006307

TO ALL BIDDERS ON THE SUBJECT BID:

ADDENDUM # 3

DATE: September 9, 2024

The following questions were raised by one or more of the proposers. The answers are provided as a matter of clarification for all proposers as follows:

Q1: The request for proposal states that we are to not include any work with the existing plaster ceiling as this will be addressed by the City of Midland. Please verify if the City will also take care of the removal and replacement of the wood ceiling structures and the lay in ceilings, and any touch up painting required, as discussed on site.

A1: Yes the City will be responsible for removal and reinstalling wood structures, ceiling grids, and paint

PLEASE RETURN THIS ADDENDUM WITH YOUR BID BY THE CLOSING DATE.

All other terms and conditions shall remain the same.

First Service Plumbing Heating Air Conditioning — Company Name

rauld@firstservice.org — Email

Raul Delgado — Bidder Authorized Signature

9/11/24 — Date

Raul Delgado — Please Print Above Name

(432) 685-0003 — Phone

CERTIFICATE OF LIABILITY INSURANCE

DATE (MM/DD/YYYY): 9/11/2024

THIS CERTIFICATE IS ISSUED AS A MATTER OF INFORMATION ONLY AND CONFERS NO RIGHTS UPON THE CERTIFICATE HOLDER. THIS CERTIFICATE DOES NOT AFFIRMATIVELY OR NEGATIVELY AMEND, EXTEND OR ALTER THE COVERAGE AFFORDED BY THE POLICIES BELOW. THIS CERTIFICATE OF INSURANCE DOES NOT CONSTITUTE A CONTRACT BETWEEN THE ISSUING INSURER(S), AUTHORIZED REPRESENTATIVE OR PRODUCER, AND THE CERTIFICATE HOLDER.

IMPORTANT: If the certificate holder is an ADDITIONAL INSURED, the policy(ies) must be endorsed. If SUBROGATION IS WAIVED, subject to the terms and conditions of the policy, certain policies may require an endorsement. A statement on this certificate does not confer rights to the certificate holder in lieu of such endorsement(s).

PRODUCER	CONTACT NAME: Janet Shepard
Tucker Agency, Ltd. P O Box 2285 Ft. Worth TX 76113	PHONE (A/C, No, Ext): (817)336-8520 FAX (A/C, No): E-MAIL ADDRESS: janet@tuckeragency.com

INSURER(S) AFFORDING COVERAGE	NAIC #
INSURER A : Amerisure Insurance Company	19488
INSURER B : Amerisure Mutual Insurance Co	23396
INSURER C :	
INSURER D :	
INSURER E :	
INSURER F :	

INSURED
First Service Air Conditioning Contractors, Inc.
3009 Garden City Highway

Midland TX 79701

COVERAGES **CERTIFICATE NUMBER:** 23-24 All Lines **REVISION NUMBER:**

THIS IS TO CERTIFY THAT THE POLICIES OF INSURANCE LISTED BELOW HAVE BEEN ISSUED TO THE INSURED NAMED ABOVE FOR THE POLICY PERIOD INDICATED. NOTWITHSTANDING ANY REQUIREMENT, TERM OR CONDITION OF ANY CONTRACT OR OTHER DOCUMENT WITH RESPECT TO WHICH THIS CERTIFICATE MAY BE ISSUED OR MAY PERTAIN, THE INSURANCE AFFORDED BY THE POLICIES DESCRIBED HEREIN IS SUBJECT TO ALL THE TERMS, EXCLUSIONS AND CONDITIONS OF SUCH POLICIES. LIMITS SHOWN MAY HAVE BEEN REDUCED BY PAID CLAIMS.

INSR LTR	TYPE OF INSURANCE	ADDL INSD	SUBR WVD	POLICY NUMBER	POLICY EFF (MM/DD/YYYY)	POLICY EXP (MM/DD/YYYY)	LIMITS	
A	X COMMERCIAL GENERAL LIABILITY [ ] CLAIMS-MADE [X] OCCUR X XCU Included X Contractual Liability GEN'L AGGREGATE LIMIT APPLIES PER: [ ] POLICY [X] PRO-JECT [ ] LOC [ ] OTHER:			CPP 2098637	10/1/2023	10/1/2024	EACH OCCURRENCE DAMAGE TO RENTED PREMISES (Ea occurrence) MED EXP (Any one person) PERSONAL & ADV INJURY GENERAL AGGREGATE PRODUCTS - COMP/OP AGG [ ]	$ 1,000,000 $ 1,000,000 $ 10,000 $ 1,000,000 $ 2,000,000 $ 2,000,000 $
B	AUTOMOBILE LIABILITY X ANY AUTO [ ] ALL OWNED AUTOS [ ] SCHEDULED AUTOS [ ] HIRED AUTOS [ ] NON-OWNED AUTOS [ ] [ ]			CA 2098636	10/1/2023	10/1/2024	COMBINED SINGLE LIMIT (Ea accident) BODILY INJURY (Per person) BODILY INJURY (Per accident) PROPERTY DAMAGE (Per accident) [ ]	$ 1,000,000 $ $ $ $
B	[ ] UMBRELLA LIAB [X] OCCUR X EXCESS LIAB [ ] CLAIMS-MADE [ ] DED [ ] RETENTION $			CU 2098640	10/1/2023	10/1/2024	EACH OCCURRENCE AGGREGATE [ ]	$ 5,000,000 $ 5,000,000 $
A	WORKERS COMPENSATION AND EMPLOYERS' LIABILITY ANY PROPRIETOR/PARTNER/EXECUTIVE OFFICER/MEMBER EXCLUDED? Y / N [ ] (Mandatory in NH) If yes, describe under DESCRIPTION OF OPERATIONS below	N / A		WC 2098641	10/1/2023	10/1/2024	X PER STATUTE [ ] OTH-ER E.L. EACH ACCIDENT E.L. DISEASE - EA EMPLOYEE E.L. DISEASE - POLICY LIMIT	$ 1,000,000 $ 1,000,000 $ 1,000,000

DESCRIPTION OF OPERATIONS / LOCATIONS / VEHICLES (ACORD 101, Additional Remarks Schedule, may be attached if more space is required)

The City of Midland is included as an Additional Insured on the General Liability, and Auto Liability policies on a claims occurred basis, if required by written contract. The General Liability, Auto Liability, and Workers Compensation policies include a blanket automatic waiver of subrogation in favor of the City of Midland, its agents, employees and officers if required by written contract. Policies include 30 Day notice of cancellation except for non-payment of premium. Umbrella Policy is Follow Form the Underlying General Liability, Auto Liability and Employers Liability coverages.

CERTIFICATE HOLDER

City of Midland
300 North Loraine
Midland, TX 79702

CANCELLATION

SHOULD ANY OF THE ABOVE DESCRIBED POLICIES BE CANCELLED BEFORE THE EXPIRATION DATE THEREOF, NOTICE WILL BE DELIVERED IN ACCORDANCE WITH THE POLICY PROVISIONS.

AUTHORIZED REPRESENTATIVE

Tracy Tucker/JANET

PACKET 12.84 September 24, 2024

© 1988-2014 ACORD CORPORATION. All rights reserved.

THIS ENDORSEMENT CHANGES THE POLICY. PLEASE READ IT CAREFULLY.

TEXAS
CONTRACTOR'S GENERAL LIABILITY EXTENSION ENDORSEMENT

TABLE OF CONTENTS	Page
1. Additional Definitions	9
2. Aggregate Limits Per Location	7
3. Aggregate Limits Per Project	6
4. Blanket Contractual Liability – Railroads	3
5. Broadened Bodily Injury Coverage	10
6. Broadened Knowledge Of Occurrence	8
7. Broadened Legal Liability Coverage For Landlord's Business Personal Property	7
8. Broadened Liability Coverage For Damage To Your Product And Your Work	10
9. Broadened Who Is An Insured	3
10. Co-Employee Bodily Injury Coverage for Managers, Supervisors, Directors or Officers [see provision 9, Broadened Who Is An Insured, paragraph 2.a.(1)]	4
11. Contractual Liability – Personal And Advertising Injury	3
12. Damage To Premises Rented To You – Specific Perils and Increased Limit	7
13. Designated Completed Projects – Amended Limits of Insurance	11
14. Extended Notice Of Cancellation And Nonrenewal	8
15. Incidental Malpractice Liability	6
16. Increased Medical Payments Limit	7
17. Mobile Equipment Redefined	9
18. Nonowned Watercraft	3
19. Product Recall Expense	2
20. Property Damage Liability – Alienated Premises	2
21. Property Damage Liability – Elevators And Sidetrack Agreements	2
22. Property Damage Liability – Property Loaned To The Insured Or Personal Property In The Care, Custody And Control Of The Insured	2
23. Reasonable Force – Bodily Injury or Property Damage	10
24. Supplementary Payments	3
25. Transfer Of Rights (Blanket Waiver Of Subrogation)	8
26. Unintentional Failure To Disclose Hazards	8

Includes copyrighted material of Insurance Services Office, Inc.

This endorsement modifies insurance provided under the following:

COMMERCIAL GENERAL LIABILITY COVERAGE FORM

Under **SECTION I – COVERAGE A. BODILY INJURY AND PROPERTY DAMAGE LIABILITY,** paragraph **2. EXCLUSIONS,** provisions **1.** through **6.** of this endorsement are excess over any valid and collectible insurance (including any deductible) available to the insured, whether primary, excess or contingent (**SECTION IV – COMMERCIAL GENERAL LIABILITY CONDITIONS**, paragraph **4. Other Insurance** is changed accordingly). Provisions **1.** through **6.** of this endorsement amend the policy as follows:

1. PROPERTY DAMAGE LIABILITY – ALIENATED PREMISES

A. Exclusion **j. Damage to Property**, subparagraph **(2)** is deleted.

B. The following paragraph is deleted from Exclusion **j. Damage to Property;**

Paragraph **(2)** of this exclusion does not apply if the premises are "your work" and were never occupied, rented or held for rental by you.

2. PROPERTY DAMAGE LIABILITY – ELEVATORS AND SIDETRACK AGREEMENTS

A. Exclusion **j. Damage to Property**, paragraphs **(3)**, **(4)**, and **(6)** do not apply to the use of elevators.

B. Exclusion **k. Damage to Your Product** does not apply to:

1. The use of elevators; or

2. Liability assumed under a sidetrack agreement.

3. PROPERTY DAMAGE LIABILITY – PROPERTY LOANED TO THE INSURED OR PERSONAL PROPERTY IN THE CARE, CUSTODY AND CONTROL OF THE INSURED

A. Exclusion **j. Damage to Property**, paragraphs **(3)** and **(4)** are deleted..

B. Coverage under this provision **3.** does not apply to "property damage" that exceeds $25,000 per occurrence or $25,000 annual aggregate.

4. PRODUCT RECALL EXPENSE

A. Exclusion **n. Recall of Products, Work or Impaired Property** does not apply to "product recall expenses" that you incur for the "covered recall" of "your product". This exception to the exclusion does not apply to "product recall expenses" resulting from:

1. Failure of any products to accomplish their intended purpose;

2. Breach of warranties of fitness, quality, durability or performance;

3. Loss of customer approval or any cost incurred to regain customer approval;

4. Redistribution or replacement of "your product", which has been recalled, by like products or substitutes;

5. Caprice or whim of the insured;

6. A condition likely to cause loss, about which any insured knew or had reason to know at the inception of this insurance;

7. Asbestos, including loss, damage or clean up resulting from asbestos or asbestos containing materials;

8. Recall of "your product(s)" that have no known or suspected defect solely because a known or suspected defect in another of "your product(s)" has been found.

B. Under **SECTION III – LIMITS OF INSURANCE**, paragraph **3.** is replaced in its entirety as follows and paragraph **8.** is added:

3. The Products-Completed Operations Aggregate Limit is the most we will pay for the sum of:

Includes copyrighted material of Insurance Services Office, Inc.

a. Damages under **COVERAGE A BODILY INJURY AND PROPERTY DAMAGE LIABILITY** because of "bodily injury" and "property damage" included in the "products-completed operations hazard" and

b. "Product recall expenses".

8. Subject to paragraph **5.** above [of the CGL Coverage Form], $25,000 is the most we will pay for all "product recall expenses" arising out of the same defect or deficiency.

5. NONOWNED WATERCRAFT

Exclusion **g. Aircraft, Auto or Watercraft**, paragraph **(2)** is deleted and replaced with the following:

[This exclusion does not apply to:]

(2) A watercraft you do not own that is:

(a) Less than 75 feet long; and

(b) Not being used to carry any person or property for a charge;

6. BLANKET CONTRACTUAL LIABILITY – RAILROADS

Under **SECTION V – DEFINITIONS**, paragraph **c.** of "Insured Contract" is deleted and replaced by the following:

c. Any easement or license agreement;

Under **SECTION V – DEFINITIONS**, paragraph **f.(1)** of "Insured Contract" is deleted.

7. CONTRACTUAL LIABILITY – PERSONAL AND ADVERTISING INJURY

Under **SECTION I – COVERAGE B.**, paragraph **2. Exclusions,** paragraph **e. Contractual Liability** is deleted.

8. SUPPLEMENTARY PAYMENTS

Under **SECTION I – SUPPLEMENTARY PAYMENTS – COVERAGES A AND B,** paragraph **1.b.** is deleted and replaced with the following:

1. b. Up to $5,000 for cost of bail bonds required because of accidents or traffic law violations arising out of the use of any vehicle to which the Bodily Injury Liability Coverage applies. We do not have to furnish these bonds.

9. BROADENED WHO IS AN INSURED

SECTION II – WHO IS AN INSURED is deleted and replaced with the following:

1. If you are designated in the Declarations as:

a. An individual, you and your spouse are insureds, but only with respect to the conduct of a business of which you are the sole owner.

b. A partnership or joint venture, you are an insured. Your members, your partners, and their spouses are also insureds, but only with respect to the conduct of your business.

c. A limited liability company, you are an insured. Your members are also insureds, but only with respect to the conduct of your business. Your managers are insureds, but only with respect to their duties as your managers.

d. An organization other than a partnership, joint venture or limited liability company, you are an insured. Your "executive officers" and directors are insureds, but only with respect to their duties as your officers or directors. Your stockholders are also insureds, but only with respect to their liability as stockholders.

Includes copyrighted material of Insurance Services Office, Inc.

2. Each of the following is also an insured:

   a. Your "volunteer workers" only while performing duties related to the conduct of your business, or your "employees," other than either your "executive officers," (if you are an organization other than a partnership, joint venture or limited liability company) or your managers (if you are a limited liability company), but only for acts within the scope of their employment by you or while performing duties related to the conduct of your business. However, none of these "employees" or "volunteer workers" are insured for:

      (1) "Bodily injury" or "personal and advertising injury":

         (a) To you, to your partners or members (if you are a partnership or joint venture), to your members (if you are a limited liability company), to a co-"employee" while in the course of his or her employment or performing duties related to the conduct of your business, or to your other "volunteer workers" while performing duties related to the conduct of your business;

         (b) To the spouse, child, parent, brother or sister of that co-"employee" or volunteer worker as a consequence of paragraph **(1)(a)** above;

         (c) For which there is any obligation to share damages with or repay someone else who must pay damages because of the injury described in paragraphs **(1)(a)** or **(b)** above; or

         (d) Arising out of his or her providing or failing to provide professional health care services except as provided in Provision **10.** of this endorsement.

         Paragraphs **(1)(a), (1)(b)** and **(1)(c)** above do not apply to your "employees" who are:

            (i) Managers;

            (ii) Supervisors;

            (iii) Directors; or

            (iv) Officers;

         with respect to "bodily injury" to a co-"employee".

      (2) "Property damage" to property:

         (a) Owned, occupied or used by;

         (b) Rented to, in the care, custody or control of, or over which physical control is being exercised for any purpose by

         you, any of your "employees," "volunteer workers", any partner or member (if you are a partnership or joint venture), or any member (if you are a limited liability company).

   b. Any person (other than your "employee" or "volunteer worker"), or any organization while acting as your real estate manager.

   c. Any person or organization having proper temporary custody of your property if you die, but only;

      (1) With respect to liability arising out of the maintenance or use of that property; and

      (2) Until your legal representative has been appointed.

   d. Your legal representative if you die, but only with respect to duties as such. That representative will have all your rights and duties under this Coverage Form.

   e. Your subsidiaries if:

      (1) They are legally incorporated entities; and

      (2) You own more than 50% of the voting stock in such subsidiaries as of the effective date of this policy.

      If such subsidiaries are not shown in the Declarations, you must report them to us within 180 days of the inception of your original policy.

Includes copyrighted material of Insurance Services Office, Inc.

f. Any person or organization, including any manager, owner, lessor, mortgagee, assignee or receiver of premises, to whom you are obligated under a written contract to provide insurance such as is afforded by this policy, but only with respect to liability arising out of the ownership, maintenance or use of that part of any premises or land leased to you, including common or public areas about such premises or land if so required in the contract.

However, no such person or organization is an insured with respect to:

(1) Any "occurrence" that takes place after you cease to occupy or lease that premises or land; or

(2) Structural alterations, new construction or demolition operations performed by or on behalf of such person or organization.

g. Any state or political subdivision but only as respects legal liability incurred by the state or political subdivision solely because it has issued a permit with respect to operations performed by you or on your behalf.

However, no state or political subdivision is an insured with respect to:

(1) "Bodily injury", "property damage", "personal and advertising injury" arising out of operations performed for the state or municipality; or

(2) "Bodily injury" or "property damage" included within the "products-completed operations hazard."

h. Any person or organization who is the lessor of equipment leased to you, to whom you are obligated under a written contract to provide insurance such as is afforded by this policy, but only with respect to their liability arising out of the maintenance, operation or use of such equipment by you or a subcontractor on your behalf with your permission and under your supervision. However, if you have entered into a construction contract subject to Subchapter C of Chapter 151 of Subtitle C of Title 2 of the Texas Insurance Code with the additional insured, the insurance afforded to such person(s) or organization(s) only applies to the extent permitted by Subchapter C of Chapter 151 of Subtitle C of Title 2 of the Texas Insurance Code.

No such person or organization, however, is an insured with respect to any "occurrence" that takes place after the equipment lease expires.

i. Any architect, engineer, or surveyor engaged by you under a written contract but only with respect to liability arising out of your premises or "your work." However, if you have entered into a construction contract subject to Subchapter C of Chapter 151 of Subtitle C of Title 2 of the Texas Insurance Code with the additional insured, the insurance afforded to such person only applies to the extent permitted by Subchapter C of the Chapter 151 of Subtitle C of Title 2 of the Texas Insurance Code.

No architect, engineer, or surveyor, however, is an insured with respect to "bodily injury," "property damage," or "personal and advertising injury" arising out of the rendering of or the failure to render any professional services by or for you, including:

(1) The preparing, approving, or failing to prepare or approve maps, drawings, opinions, reports, surveys, change orders, designs or specifications; or

(2) Supervisory, inspection, or engineering services.

This paragraph **i.** does not apply if a separate Additional Insured endorsement providing liability coverage for architects, engineers, or surveyors engaged by you is attached to the policy.

If the written contract or written agreement requires primary and non-contributory coverage, the insurance provided by paragraphs **f.** through **i.** above will be primary and non-contributory relative to other insurance available to the additional insured which covers that person or organization as a Named Insured, and we will not share with that other insurance.

3. Any organization you newly acquire or form, other than a partnership, joint venture or limited liability company and over which you maintain ownership or majority interest, will qualify as a Named Insured if there is no other similar insurance available to that organization. However:

a. Coverage under this provision is afforded only until the end of the policy period;

b. Coverage **A** does not apply to "bodily injury" or "property damage" that occurred before you acquired or formed the organization;

Includes copyrighted material of Insurance Services Office, Inc.

c. Coverage **B** does not apply to "personal and advertising injury" arising out of an offense committed before you acquired or formed the organization.

d. Coverage **A** does not apply to "product recall expense" arising out of any withdrawal or recall that occurred before you acquired or formed the organization.

4. Any person or organization (referred to below as vendor) with whom you agreed under a written contract to provide insurance is an insured, but only with respect to "bodily injury" or "property damage" arising out of "your products" that are distributed or sold in the regular course of the vendor's business.

However, no such person or organization is an insured with respect to:

a. "Bodily injury" or "property damage" for which the vendor is obligated to pay damages by reason of the assumption of liability in a contract or agreement. This exclusion does not apply to liability for damages that the vendor would have in the absence of the contract or agreement.

b. Any express warranty unauthorized by you;

c. Any physical or chemical change in "your product" made intentionally by the vendor;

d. Repackaging, except when unpacked solely for the purpose of inspection, demonstration, testing, or the substitution of parts under instructions from the manufacturer, and then repackaged in the original container;

e. Any failure to make such inspections, adjustments, tests or servicing as the vendor has agreed to make or normally undertakes to make in the usual course of business, in connection with the distribution or sale of "your products";

f. Demonstration, installation, servicing or repair operations, except such operations performed at the vendor's premises in connection with the sale of the "your product";

g. "Your products" which, after distribution or sale by you, have been labeled or relabeled or used as a container, part or ingredient of any other thing or substance by or for the vendor.

h. "Bodily injury" or "property damage" arising out of the sole negligence of the vendor for its own acts or omissions or those of its employees or anyone else acting on its behalf. However, this exclusion does not apply to:

(1) The exceptions contained in subparagraphs **d.** or **f.**; or

(2) Such inspections, adjustments, tests or servicing as the vendor has agreed to make or normally undertakes to make in the usual course of business, in connection with the distribution or sale of the products.

This paragraph **4.** does not apply to any insured person or organization from which you have acquired "your products", or any ingredient, part, or container, entering into, accompanying or containing "your products". This paragraph **4.** also does not apply if a separate Additional Insured endorsement, providing liability coverage for "bodily injury" or "property damage" arising out of "your product" that is distributed or sold in the regular course of a vendor's business, is attached to the policy.

No person or organization is an insured with respect to the conduct of any current or past partnership, joint venture or limited liability company that is not shown as a Named Insured in the Declarations.

10. INCIDENTAL MALPRACTICE LIABILITY

As respects provision **9.**, **SECTION II – WHO IS AN INSURED**, paragraph **2.a.(1)(d)** does not apply to any nurse, emergency medical technician or paramedic employed by you to provide medical or paramedical services, provided that you are not engaged in the business or occupation of providing such services, and your "employee" does not have any other insurance that would also cover claims arising under this provision, whether the other insurance is primary, excess, contingent or on any other basis.

Under **SECTION III – LIMITS OF INSURANCE**, provisions **11.** through **14.** of this endorsement amend the policy as follows:

11. AGGREGATE LIMITS PER PROJECT

The General Aggregate Limit applies separately to each of your construction projects away from premises owned by or rented to you.

Includes copyrighted material of Insurance Services Office, Inc.

12. AGGREGATE LIMITS PER LOCATION

The General Aggregate Limit applies separately to each of your locations, but only when required by written contract or written agreement. As respects this provision **12.**, your locations are premises you own, rent or use involving the same or connecting lots or premises whose connection is interrupted only by a street, roadway, waterway or right-of-way of a railroad. However, your locations do not include any premises where you, or others acting on your behalf, are performing construction operations.

13. INCREASED MEDICAL PAYMENTS LIMITS

A. **SECTION III – LIMITS OF INSURANCE**, paragraph **7.**, the Medical Expense Limit, is subject to all the terms of **SECTION III – LIMITS OF INSURANCE** and is the greater of:

1. $10,000; or

2. The amount shown in the Declarations for Medical Expense Limit.

B. This provision **13.** does not apply if **COVERAGE C MEDICAL PAYMENTS** is excluded either by the provisions of the Coverage Form or by endorsement.

14. DAMAGE TO PREMISES RENTED TO YOU – SPECIFIC PERILS AND INCREASED LIMIT

A. The word fire is changed to "specific perils" where it appears in:

1. The last paragraph of **SECTION I – COVERAGE A,** paragraph **2. Exclusions;**

2. **SECTION IV,** paragraph **4.b. Excess Insurance.**

B. The Limits of Insurance shown in the Declarations will apply to all damage proximately caused by the same event, whether such damage results from a "specific peril" or any combination of "specific perils."

C. The Damage To Premises Rented To You Limit described in **SECTION III –- LIMITS OF INSURANCE**, paragraph **6.**, is replaced by a new limit, which is the greater of:

1. $1,000,000; or

2. The amount shown in the Declarations for Damage To Premises Rented To You Limit.

D. This provision **14.** does not apply if the Damage To Premises Rented To You Limit of **SECTION I – COVERAGE A** is excluded either by the provisions of the Coverage Form or by endorsement.

E. "Specific Perils" means fire; lightning; explosion; windstorm or hail; smoke; aircraft or vehicles; riot or civil commotion; vandalism; leakage from fire extinguishing equipment; weight of snow, ice or sleet; or "water damage".

"Water damage" means accidental discharge or leakage of water or steam as the direct result of the breaking or cracking of any part of a system or appliance containing water or steam.

15. BROADENED LEGAL LIABILITY COVERAGE FOR LANDLORD'S BUSINESS PERSONAL PROPERTY

Under **SECTION I – COVERAGE A BODILY INJURY AND PROPERTY DAMAGE LIABILITY, 2. Exclusions, j. Damage to Property**, the first paragraph following paragraph **(6)** is deleted and replaced with the following:

Paragraphs **(1)**, **(3)** and **(4)** of this exclusion do not apply to "property damage" (other than damage by fire) to a landlord's business personal property that is subject to, or part of, a premises lease or rental agreement with that landlord.

The most we will pay for damages under this provision **15.** is $10,000. A $250 deductible applies.

Under **SECTION IV – COMMERCIAL GENERAL LIABILITY CONDITIONS**, provisions **16.** through **18.** of this endorsement amend the policy as follows:

Includes copyrighted material of Insurance Services Office, Inc.

16. BROADENED KNOWLEDGE OF OCCURRENCE

Under **2. Duties In The Event Of Occurrence, Offense, Claim, Or Suit**, paragraph **a.** is deleted and replaced and paragraphs **e.** and **f.** are added as follows:

a. You must see to it that we are notified as soon as practicable of an "occurrence" or an offense, regardless of the amount, which may result in a claim. Knowledge of an "occurrence" or an offense by your "employee(s)" shall not, in itself, constitute knowledge to you unless one of your partners, members, "executive officers," directors, or managers has knowledge of the "occurrence" or offense. To the extent possible, notice should include:

(1) How, when and where the "occurrence" or offense took place;

(2) The names and addresses of any injured persons and witnesses; and

(3) The nature and location of any injury or damage arising out of the "occurrence" or offense.

e. If you report an "occurrence" to your workers compensation carrier that develops into a liability claim for which coverage is provided by this Coverage Form, failure to report such an "occurrence" to us at the time of the "occurrence" shall not be deemed a violation of paragraphs a., b., and c. above. However, you shall give written notice of this "occurrence" to us as soon you become aware that this "occurrence" may be a liability claim rather than a workers compensation claim.

f. You must see to it that the following are done in the event of an actual or anticipated "covered recall" that may result in "product recall expense":

(1) Give us prompt notice of any discovery or notification that "your product" must be withdrawn or recalled. Include a description of "your product" and the reason for the withdrawal or recall;

(2) Cease any further release, shipment, consignment or any other method of distribution of like or similar products until it has been determined that all such products are free from defects that could be a cause of loss under the insurance.

17. UNINTENTIONAL FAILURE TO DISCLOSE HAZARDS

Paragraph **6. Representations** is deleted and replaced with the following:

6. Representations

By accepting this policy, you agree:

a. The statements in the Declarations are accurate and complete;

b. Those statements are based upon representations you made to us; and

c. We have issued this policy in reliance upon your representations.

We will not deny coverage under this Coverage Form if you unintentionally fail to disclose all hazards existing as of the inception date of this policy. You must report to us any knowledge of an error or omission in the description of any premises or operations intended to be covered by this Coverage Form as soon as practicable after its discovery. However, this provision does not affect our right to collect additional premium or exercise our right of cancellation or nonrenewal.

18. TRANSFER OF RIGHTS (BLANKET WAIVER OF SUBROGATION)

Paragraph **8. Transfer of Rights Of Recovery Against Others To Us** is deleted and replaced with the following:

8. If the insured has rights to recover all or part of any payment we have made under this Coverage Form, those rights are transferred to us. The insured must do nothing after loss to impair them. At our request, the insured will bring "suit" or transfer those rights to us and help us enforce them. However, if the insured has waived rights to recover through a written contract, or if "your work" was commenced under a letter of intent or work order, subject to a subsequent reduction to writing with customers whose customary contracts require a waiver, we waive any right of recovery we may have under this Coverage Form.

19. EXTENDED NOTICE OF CANCELLATION AND NONRENEWAL

Includes copyrighted material of Insurance Services Office, Inc.

Paragraph 2.b. of **A. Cancellation** of the **COMMON POLICY CONDITIONS** is deleted and replaced with the following:

b. 60 days before the effective date of the cancellation if we cancel for any other reason.

Under **SECTION IV – COMMERCIAL GENERAL LIABILITY CONDITIONS**, Paragraph **9. When We Do Not Renew** is deleted and replaced with the following:

9. When We Do Not Renew

a. We may elect not to renew this policy except, that under the provisions of the Texas Insurance Code, we may not refuse to renew this policy solely because the policyholder is an elected official.

b. If we elect not to renew this policy, we may do so by mailing or delivering to the first Named Insured, at the last mailing address known to us, written notice of nonrenewal, stating the reason for nonrenewal, at least 60 days before the expiration date. If notice is mailed or delivered less than 60 days before the expiration date, this policy will remain in effect until the 61st day after the date on which the notice is mailed or delivered. Earned premium for any period of coverage that extends beyond the expiration date will be computed pro rata based on the previous year's premium.

c. If notice is mailed, proof of mailing will be sufficient proof of notice.

d. The transfer of a policyholder between admitted companies within the same insurance group is not considered a refusal to renew.

20. MOBILE EQUIPMENT REDEFINED

Under **SECTION V – DEFINITIONS**, paragraph **12.** "Mobile equipment", paragraph **f. (1)** does not apply to self-propelled vehicles of less than 1,000 pounds gross vehicle weight that are not designed for highway use.

21. ADDITIONAL DEFINITIONS

1. SECTION V – DEFINITIONS, paragraph **4.** "Coverage territory" is replaced by the following definition:

"Coverage territory" means anywhere in the world with respect to liability arising out of "bodily injury," "property damage," or "personal and advertising injury," including "personal and advertising injury" offenses that take place through the Internet or similar electronic means of communication provided the insured's responsibility to pay damages is determined in a settlement to which we agree or in a "suit" on the merits, in the United States of America (including its territories and possessions), Puerto Rico and Canada.

2. SECTION V – DEFINITIONS is amended by the addition of the following definitions:

"Covered recall" means a recall made necessary because you or a government body has determined that a known or suspected defect, deficiency, inadequacy, or dangerous condition in "your product" has resulted or will result in "bodily injury" or "property damage".

"Product Recall expenses" mean only reasonable and necessary extra costs, which result from or are related to the recall or withdrawal of "your product" for:

a. Telephone and telegraphic communication, radio or television announcements, computer time and newspaper advertising;

b. Stationery, envelopes, production of announcements and postage or facsimiles;

c. Remuneration paid to regular employees for necessary overtime or authorized travel expense;

d. Temporary hiring by you or by agents designated by you of persons, other than your regular employees, to perform necessary tasks;

e. Rental of necessary additional warehouse or storage space;

f. Packaging of or transportation or shipping of defective products to the location you designate; and

g. Disposal of "your products" that cannot be reused. Disposal expenses do not include:

(1) Expenses that exceed the original cost of the materials incurred to manufacture or process such product; and

Includes copyrighted material of Insurance Services Office, Inc.

(2) Expenses that exceed the cost of normal trash discarding or disposal, except as are necessary to avoid "bodily injury" or "property damage".

22. REASONABLE FORCE – BODILY INJURY OR PROPERTY DAMAGE

Under **SECTION I – COVERAGE A.**, paragraph **2. Exclusions**, subparagraph **a. Expected Or Intended Injury** is deleted and replaced with the following:

[This insurance does not apply to:]

a. Expected Or Intended Injury

"Bodily injury" or "property damage" expected or intended from the standpoint of the insured. This exclusion does not apply to "bodily injury" or "property damage" resulting from the use of reasonable force to protect persons or property.

23. BROADENED LIABILITY COVERAGE FOR DAMAGE TO YOUR PRODUCT AND YOUR WORK

A. Under **SECTION I – COVERAGE A.**, paragraph **2. Exclusions**, exclusion **k. Damage to Your Product** and exclusion **l. Damage to Your Work** are deleted and replaced with the following:

[This insurance does not apply to:]

k. Damage to Your Product

"Property damage" to "your product" arising out of it or any part of it, except when caused by or resulting from:

(1) Fire;

(2) Smoke;

(3) "Collapse"; or

(4) Explosion.

For purposes of exclusion k. above, "collapse" means an abrupt falling down or caving in of a building or any part of a building with the result that the building or part of the building cannot be occupied for its intended purpose.

l. Damage to Your Work

"Property damage" to "your work" arising out of it or any part of it and included in the "products-completed operations hazard". This exclusion does not apply:

(1) If the damaged work or the work out of which the damage arises was performed on your behalf by a subcontractor; or

(2) If the cause of loss to the damaged work arises as a result of:

(a) Fire;

(b) Smoke;

(c) "Collapse"; or

(d) Explosion.

For purposes of exclusion l. above, "collapse" means an abrupt falling down or caving in of a building or any part of a building with the result that the building or part of the building cannot be occupied for its intended purpose.

B. The following paragraph is added to **SECTION III – LIMITS OF INSURANCE**:

Includes copyrighted material of Insurance Services Office, Inc.

Subject to **5.** above [of the CGL Coverage Form], $100,000 is the most we will pay under Coverage **A** for the sum of damages arising out of any one "occurrence" because of "property damage" to "your product" and "your work" that is caused by fire, smoke, collapse or explosion and is included within the "product-completed operations hazard". This sublimit does not apply to "property damage" to "your work" if the damaged work, or the work out of which the damage arises, was performed on your behalf by a subcontractor.

24. BROADENED BODILY INJURY COVERAGE

Under **SECTION V – DEFINITIONS**, the definition of "bodily injury" is deleted and replaced with the following:

3. "Bodily injury"

a. Means physical:

(1) Injury;

(2) Disability;

(3) Sickness; or

(4) Disease;

sustained by a person, including death resulting from any of these at any time.

b. Includes mental:

(5) Anguish;

(6) Injury;

(7) Humiliation;

(8) Fright; or

(9) Shock;

directly resulting from any "bodily injury" described in paragraph **3.a.**

c. All "bodily injury" described in paragraph **3.b.** shall be deemed to have occurred at the time the "bodily injury" described in paragraph **3.a.** occurred.

25. DESIGNATED COMPLETED PROJECTS – AMENDED LIMITS OF INSURANCE

When a written contract or written agreement between you and another party requires project-specific limits of insurance exceeding the limits of this policy;

A. for "bodily injury" or "property damage" that occurs within any policy period for which we provided coverage; and

B. for "your work" performed within the "products-completed operation hazard"; and

C. for which we previously issued Amendment Of Limits Of Insurance (Designated Project Or Premises) CG 71 94 either during this policy term or a prior policy term; and

D. that designated project is now complete;

the limits of insurance shown in the CG 71 94 schedule will replace the limits of insurance of this policy for the designated project and will continue to apply for the amount of time the written contract or written agreement requires, subject to the state statute of repose of the project location. These limits are inclusive of and not in addition to the replaced limits.

Includes copyrighted material of Insurance Services Office, Inc.

THIS ENDORSEMENT CHANGES THE POLICY. PLEASE READ IT CAREFULLY.

CONTRACTOR'S BLANKET FLEX ADDITIONAL INSURED ENDORSEMENT – FORM A

This endorsement modifies insurance provided under the following:

COMMERCIAL GENERAL LIABILITY COVERAGE PART

Policy Number	**Agency Number** 0775275	**Policy Effective Date**
Policy Expiration Date	**Date**	**Account Number**
Named Insured	**Agency** TUCKER AGENCY, LTD.	**Issuing Company**

A. SECTION II - WHO IS AN INSURED is amended to add as an additional insured:

1. Any person or organization with whom you have agreed in a "written agreement" that such person or organization be added as an additional insured on this policy, and any other person or organization you are required to add as an additional insured under such "written agreement".

2. If "your work" began under a written letter of intent or written work order, any person or organization who issued the written letter of intent or written work order, but:

   a. such coverage will apply only for 30 calendar days following the date the written letter of intent or written work order was issued; and

   b. the person or organization is an additional insured only for, and to the extent of, liability arising out of "bodily injury", "property damage", or "personal and advertising injury" caused, in whole or in part, by your negligent acts or omissions, or the negligent acts or omissions of others working on your behalf, in the performance of your work as specified in the written letter of intent or written work order. This coverage does not apply to liability arising out of the independent acts or omissions of the additional insured.

For the purposes of the coverage provided by this endorsement, a "written agreement" means a written contract or written agreement that:

1. requires you to include a person or organization as an additional insured for a period of time during the policy period; and

2. is executed prior to the occurrence of "bodily injury", "property damage", or "personal and advertising injury" that forms the basis for a claim under this policy.

The insurance provided by this endorsement does not apply to any person or organization that is specifically listed as an additional insured on another endorsement attached to this policy.

B. The coverage provided to any person or organization added as an additional insured pursuant to Paragraph **A.1** is limited as follows:

1. If the "written agreement" specifically and exclusively requires you to name the person or organization as an additional insured using the ISO CG 20 10 endorsement with edition dates of 11 85 or 10 01, or the ISO CG 20 37 10 01 endorsement, that person or organization is an additional insured, but only with respect to liability for "bodily injury", "property damage", or "personal and advertising injury" arising out of "your work" for that insured by or for you.

2. If the "written agreement" requires you to name the person or organization as an additional insured using the ISO CG 20 10 and or CG 20 37 endorsements without specifically and exclusively requiring the 11 85 or 10 01 edition dates, that person or organization is an additional insured, but only with respect to liability for "bodily injury", "property damage", or "personal and advertising injury" caused, in whole or in part, by your acts or omissions or the acts or omissions of those acting on your behalf.

3. If the "written agreement" requires you to name the person or organization as an additional insured for operations arising out of your work and does not specify an ISO additional insured endorsement, that person or organization is an additional insured, but only with respect to liability for "bodily injury", "property damage", or "personal and advertising injury" arising out of your acts or omissions, or the acts or omissions of others working on your behalf, in the performance of your work as specified in the "written agreement". This coverage does not apply to liability arising out of the sole negligence of the additional insured unless specifically required in the "written agreement".

4. If none of the above paragraphs apply, then the person or organization is an additional insured only for, and to the extent of, liability arising out of "bodily injury", "property damage", or "personal and advertising injury" caused, in whole or in part, by your negligent acts or omissions, or the negligent acts or omissions of others working on your behalf, in the performance of your work as specified in the "written agreement". This coverage does not apply to liability arising out of the independent acts or omissions of the additional insured.

However, the insurance afforded to such additional insured only applies to the extent permitted by law.

C. The insurance provided to an additional insured under this endorsement does not apply to:

1. "Bodily injury" or "property damage" included in the "products-completed operations hazard" unless the "written agreement" specifically requires such coverage (including by specifically requiring the CG 20 10 11 85). To the extent the "written agreement" requires such coverage for a specified amount of time, the coverage provided by this endorsement is limited to the amount of time required for such coverage by the "written agreement".

2. "Bodily injury", "property damage", or "personal and advertising injury" arising out of an architect's, engineer's, or surveyor's rendering of, or failure to render, any professional services, including but not limited to:

   a. The preparing, approving, or failing to prepare or approve:
   (1) Maps;
   (2) Drawings;
   (3) Opinions;
   (4) Reports;
   (5) Surveys;
   (6) Change orders;

(7) Design specifications; and

b. Supervisory, inspection, or engineering services.

D. The limits of insurance that apply to the additional insured are the least of those specified in the "written agreement" or declarations of this policy.

Coverage provided by this endorsement for any additional insured shall not increase the applicable Limits of Insurance shown in the Declarations. The limits of insurance that apply to the additional insured are inclusive of, and not in addition to, the Limits of Insurance shown in the Declarations.

E. With respect to the coverage provided by this endorsement, **SECTION IV – COMMERCIAL GENERAL LIABILITY CONDITIONS,** Paragraph **4. Other Insurance** is deleted and replaced with the following:

4. **Other Insurance.**

a. Coverage provided by this endorsement is excess over any other valid and collectible insurance available to the additional insured whether:

(1) Primary;
(2) Excess;
(3) Contingent; or
(4) On any other basis.

In addition, this insurance is excess over any self-insured retentions, deductibles, or captive retentions payable by the additional insured or payable by any person or organization whose coverage is available to the additional insured.

However, if the "written agreement" requires primary and non-contributory coverage, this insurance will be primary and non-contributory relative only to the other insurance available to the additional insured which covers that person or organization as a Named Insured, and we will not share with that other insurance. For any other insurance available to the additional insured where that person or organization is not a Named Insured, this policy will share coverage with that other insurance based on the terms specified in Paragraph **b.** Method of Sharing below.

b. Method of Sharing

If all the other insurance permits contribution by equal shares, we will follow this method also. Under this method, each insurer contributes equal amounts until it has paid its applicable limit of insurance or none of the loss remains, whichever comes first.

If any of the other insurance does not permit contribution by equal shares, we will contribute by limits. Under this method, each insurer's share is based on the ratio of its applicable limit of insurance to the total applicable limits of insurance of all insurers.

THIS ENDORSEMENT CHANGES THE POLICY. PLEASE READ IT CAREFULLY.

NOTICE OF CANCELLATION, NONRENEWAL OR MATERIAL CHANGE – THIRD PARTY

This endorsement modifies insurance provided under the following:

AUTO DEALERS COVERAGE FORM
BUSINESS AUTO COVERAGE FORM
BUSINESS AUTO PHYSICAL DAMAGE COVERAGE FORM
COMMERCIAL GENERAL LIABILITY COVERAGE FORM
COMMERCIAL UMBRELLA LIABILITY COVERAGE FORM
GARAGE COVERAGE FORM
MOTOR CARRIER COVERAGE FORM
PRODUCTS/COMPLETED OPERATIONS LIABILITY COVERAGE FORM
TRUCKERS COVERAGE FORM

Subject to the cancellation provisions of the Coverage Form to which this endorsement is attached, we will not:

1. Cancel;
2. Nonrenew; or,
3. Materially change (reduce or restrict)

this Coverage Form, except for nonpayment of premium, until we provide at least 30 days written notice of such cancellation, nonrenewal or material change. Written notice will be to the person or organization named in the Schedule. Such notice will be by certified mail with return receipt requested.

This notification of cancellation, nonrenewal or material change to the person or organization named in the Schedule is intended as a courtesy only. Our failure to provide such notification will not:

1. Extend any Coverage Form cancellation date;
2. Negate the cancellation as to any insured or any certificate holder;
3. Provide any additional insurance that would not have been provided in the absence of this endorsement; or
4. Impose liability of any kind upon us.

This endorsement does not entitle the person or organization named in the Schedule to any benefits, rights or protection under this Coverage Form.

SCHEDULE

Name Of Person Or Organization	Mailing Address
Any person or organization holding a certificate of insurance issued for you, provided the certificate:	The address shown for that person or organization in that certificate of insurance

1. Refers to this policy;
2. States that notice of:
   a. Cancellation;
   b. Nonrenewal; or
   c. Material change reducing or restricting coverage;

   will be provided to that person or organization;
3. Is in effect at the time of the:
   a. Cancellation;
   b. Nonrenewal; or
   c. Material change reducing or restricting coverage; and
4. Is on file at your agent or broker's office for this policy

THIS ENDORSEMENT CHANGES THE POLICY. PLEASE READ IT CAREFULLY.

TEXAS ADVANTAGE
COMMERCIAL AUTOMOBILE BROAD FORM ENDORSEMENT

This endorsement modifies insurance provided under the

BUSINESS AUTO COVERAGE FORM

With respect to coverage provided by this endorsement, the provisions of the Coverage Form apply unless modified by the endorsement.

The premium for this endorsement is $ _____

1. BROAD FORM INSURED

SECTION II - LIABILITY COVERAGE, A.1. Who Is An Insured is amended by the addition of the following:

d. Any organization you newly acquire or form, other than a partnership, joint venture or limited liability company, and over which you maintain ownership or a majority interest, will qualify as a Named Insured. However,

(1) Coverage under this provision is afforded only until the end of the policy period;

(2) Coverage does not apply to "accidents" or "loss" that occurred before you acquired or formed the organization; and

(3) Coverage does not apply to an organization that is an "insured" under any other policy or would be an "insured" but for its termination or the exhausting of its limit of insurance.

e. Any "employee" of yours using:

(1) A covered "auto" you do not own, hire or borrow, or a covered "auto" not owned by the "employee" or a member of his or her household, while performing duties related to the conduct of your business or your personal affairs; or

(2) An "auto" hired or rented under a contract or agreement in that "employee's" name, with your permission, while performing duties related to the conduct of your business. However, your "employee" does not qualify as an insured under this paragraph **(2)** while using a covered "auto" rented from you or from any member of the "employee's" household.

f. Your members, if you are a limited liability company, while using a covered "auto" you do not own, hire or borrow and while performing duties related to the conduct of your business or your personal affairs.

g. Any person or organization with whom you agree in a written contract, written agreement or permit, to provide insurance such as is afforded under this policy, but only with respect to your covered "autos".

This provision does not apply:

(1) Unless the written contract or agreement is executed or the permit is issued prior to the "bodily injury" or "property damage";

(2) To any person or organization included as an insured by an endorsement or in the Declarations; or

(3) To any lessor of "autos" unless:

(a) The lease agreement requires you to provide direct primary insurance for the lessor;

(b) The "auto" is leased without a driver; and

Includes copyrighted material of Insurance Services Office, Inc.

(c) The lease had not expired.

Leased "autos" covered under this provision will be considered covered "autos" you own and not covered "autos" you hire.

h. Any legally incorporated organization or subsidiary in which you own more than 50% of the voting stock on the effective date of this endorsement.

This provision does not apply to "bodily injury" or "property damage" for which an "insured" is also an insured under any other automobile policy or would be an insured under such a policy, but for its termination or the exhaustion of its limits of insurance, unless such policy was written to apply specifically in excess of this policy.

2. **COVERAGE EXTENSIONS - SUPPLEMENTARY PAYMENTS**

Under **Section II - LIABILITY COVERAGE, A.2.a. Supplementary Payments**, paragraphs **(2)** and **(4)** are deleted and replaced as follows:

(2) Up to $2,500 for the cost of bail bonds (including bonds for related traffic law violations) required because of an "accident" we cover. We do not have to furnish these bonds.

(4) All reasonable expenses incurred by the "insured" at our request, including actual loss of earnings up to $500 a day because of time off from work.

3. **AMENDED FELLOW EMPLOYEE EXCLUSION**

Under **SECTION II - LIABILITY COVERAGE, B. EXCLUSIONS**, paragraph **5. Fellow Employee** is deleted and replaced by the following:

5. Fellow Employee

"Bodily injury" to:

a. Any fellow "employee" of the "insured" arising out of and in the course of the fellow "employee's" employment or while performing duties related to the conduct of your business. However, this exclusion does not apply to your "employees" that are officers, managers, supervisors or above. Coverage is excess over any other collectible insurance.

b. The spouse, child, parent, brother or sister of that fellow "employee" as a consequence of paragraph **a.** above.

4. **HIRED AUTO PHYSICAL DAMAGE COVERAGE AND LOSS OF USE EXPENSE**

A. Under **SECTION III - PHYSICAL DAMAGE COVERAGE, A. COVERAGE**, the following is added:

If any of your owned covered "autos" are covered for Physical Damage, we will provide Physical Damage coverage to "autos" that you or your "employees" hire or borrow, under your name or the "employee's" name, for the purpose of doing your work.

We will provide coverage equal to the broadest physical damage coverage applicable to any covered "auto" shown in the Declarations, Item Three, Schedule of Covered Autos You Own, or on any endorsements amending this schedule.

B. Under **SECTION III - PHYSICAL DAMAGE COVERAGE, A.4. Coverage Extensions.** paragraph **b. Loss Of Use Expenses** is deleted and replaced with the following:

b. Loss Of Use Expenses

For Hired Auto Physical Damage, we will pay expenses for which an "insured" becomes legally responsible to pay for loss of use of a vehicle rented or hired without a driver, under a written rental contract or agreement. We will pay for loss of use expenses if caused by:

(1) Other than collision, only if the Declarations indicate that Comprehensive Coverage is provided for any covered "auto";

Includes copyrighted material of Insurance Services Office, Inc.

(2) Specified Causes of Loss, only if the Declarations indicate that Specified Causes Of Loss Coverage is provided for any covered "auto"; or

(3) Collision, only if the Declarations indicate that Collision Coverage is provided for any covered "auto".

However, the most we will pay for any expenses for loss of use is $30 per day, to a maximum of $2,000.

C. Under **SECTION IV – BUSINESS AUTO CONDITIONS, B. General Conditions, 5. Other Insurance,** paragraph **b.** is replaced by the following:

b. For Hired Auto Physical Damage, the following are deemed to be covered "autos" you own:

1. Any covered "auto" you lease, hire, rent or borrow; and

2. Any covered "auto" hired or rented by your "employees" under a contract in that individual "employee's" name, with your permission, while performing duties related to the conduct of your business.

However, any "auto" that is leased, hired, rented or borrowed with a driver is not a covered "auto", nor is any "auto" you hire from any of your "employees", partners (if you are a partnership), members (if you are a limited liability company), or members of their households.

5. LOAN OR LEASE GAP COVERAGE

Under **SECTION III – PHYSICAL DAMAGE COVERAGE, A. COVERAGE,** the following is added:

If a covered "auto" is owned or leased and if we provide Physical Damage Coverage on it, we will pay, in the event of a covered total "loss", any unpaid amount due on the lease or loan for a covered "auto", less:

(a) The amount paid under the Physical Damage Section of the policy; and:

(b) Any:

(1) Overdue lease or loan payments including penalties, interest or other charges resulting from overdue payments at the time of the "loss";

(2) Financial penalties imposed under a lease for excessive use, abnormal wear and tear or high mileage;

(3) Costs for extended warranties, Credit Life Insurance, Health, Accident or Disability Insurance purchased with the loan or lease;

(4) Security deposits not refunded by a lessor; and

(5) Carry-over balances from previous loans or leases.

6. RENTAL REIMBURSEMENT

Under **SECTION III - PHYSICAL DAMAGE COVERAGE, A.4. Coverage Extensions,** paragraph **a. Transportation Expenses** is deleted and replaced by the following:

a. Transportation Expenses

(1) We will pay up to $75 per day to a maximum of $2,000 for transportation expense incurred by you because of covered "loss". We will pay only for those covered "autos" for which you carry Collision Coverage or either Comprehensive Coverage or Specified Causes of Loss Coverage. We will pay for transportation expenses incurred during the period beginning 24 hours after the covered "loss" and ending, regardless of the policy's expiration, when the covered "auto" is returned to use or we pay for its "loss". This coverage is in addition to the otherwise applicable coverage you have on a covered "auto". No deductibles apply to this coverage.

Includes copyrighted material of Insurance Services Office, Inc.

(2) This coverage does not apply while there is a spare or reserve "auto" available to you for your operation.

7. AIRBAG COVERAGE

Under **SECTION III - PHYSICAL DAMAGE, B. EXCLUSIONS**, paragraph **3.** is deleted and replaced by the following:

3. We will not pay for "loss" caused by or resulting from any of the following unless caused by other "loss" that is covered by this insurance:

(1) Wear and tear, freezing, mechanical or electrical breakdown. However, this exclusion does not include the discharge of an airbag.

(2) Blowouts, punctures or other road damage to tires.

8. GLASS REPAIR – WAIVER OF DEDUCTIBLE

Section III – PHYSICAL DAMAGE COVERAGE, D. Deductible is amended to add the following:

No deductible applies to glass damage if the glass is repaired rather than replaced.

9. COLLISION COVERAGE – WAIVER OF DEDUCTIBLE

Under **Section III - PHYSICAL DAMAGE COVERAGE, D. Deductible** is amended to add the following:

When there is a loss to your covered "auto" insured for Collision Coverage, no deductible will apply if the loss was caused by a collision with another "auto" insured by us.

10. KNOWLEDGE OF ACCIDENT

Under **SECTION IV - BUSINESS AUTO CONDITIONS, A. Loss Conditions, 2. Duties In The Event Of Accident, Claim, Suit Or Loss**, paragraph **a.** is deleted and replaced by the following:

a. You must see to it that we are notified as soon as practicable of an "accident", claim, "suit" or "loss". Knowledge of an "accident", claim, "suit" or "loss" by your "employees" shall not, in itself, constitute knowledge to you unless one of your partners, executive officers, directors, managers, or members (if you are a limited liability company) has knowledge of the "accident", claim, "suit" or "loss". Notice should include:

(1) How, when and where the "accident" or "loss" occurred;

(2) The "insured's" name and address; and

(3) To the extent possible, the names and addresses of any injured persons and witnesses.

11. TRANSFER OF RIGHTS (BLANKET WAIVER OF SUBROGATION)

Under **SECTION IV - BUSINESS AUTO CONDITIONS, A. Loss Conditions** paragraph **5. Transfer Of Rights Of Recovery Against Others To Us** is deleted and replaced by the following:

5. Transfer Of Rights Of Recovery Against Others To Us

If any person or organization to or for whom we make payment under this Coverage Form has rights to recover damages from another, those rights are transferred to us. That person or organization must do everything necessary to secure our rights and must do nothing after "accident" or "loss" to impair them. However, if the "insured" has waived rights to recover through a written contract, or if your work was commenced under a letter of intent or work order, subject to a subsequent reduction in writing with customers whose customary contracts require a waiver, we waive any right of recovery we may have under this Coverage Form.

Includes copyrighted material of Insurance Services Office, Inc.

12. UNINTENTIONAL FAILURE TO DISCLOSE HAZARDS

Under **SECTION IV - BUSINESS AUTO CONDITIONS , B. General Conditions** , paragraph **2. Concealment, Misrepresentation Or Fraud** is amended by the addition of the following:

We will not deny coverage under this Coverage Form if you unintentionally fail to disclose all hazards existing as of the inception date of this policy. You must report to us any knowledge of an error or omission in your representations as soon as practicable after its discovery. This provision does not affect our right to collect additional premium or exercise our right of cancellation or non-renewal.

13. BLANKET COVERAGE FOR CERTAIN OPERATIONS IN CONNECTION WITH RAILROADS

When required by written contract or written agreement, the definition of "insured contract" is amended as follows:

— The exception contained in paragraph **H.3.** relating to construction or demolition operations on or within 50 feet of a railroad; and

— Paragraph **H.a.**

are deleted with respect to the use of a covered "auto" in operations for, or affecting, a railroad.

Includes copyrighted material of Insurance Services Office, Inc.

POLICY NUMBER:

COMMERCIAL AUTO
CA 71 65 09 11

THIS ENDORSEMENT CHANGES THE POLICY. PLEASE READ IT CAREFULLY.

DESIGNATED INSURED - PRIMARY NON-CONTRIBUTORY COVERAGE WHEN REQUIRED BY INSURED CONTRACT OR CERTIFICATE

This endorsement modifies insurance provided under the

BUSINESS AUTO COVERAGE FORM

The provisions of the Coverage Form apply unless changed by this endorsement.

This endorsement identifies person(s) or organization(s) who are "insured" under the Who Is An Insured Provision of the Coverage Form.

This endorsement changes the policy on the inception date of the policy, unless another date is shown below.

Endorsement Effective:	Countersigned By:
Named Insured:	(Authorized Representative)

(No entry may appear above. If so, information to complete this endorsement is in the Declarations.)

1. Section II – Liability Coverage, A. Coverage, 1. Who Is An Insured is amended to add:

   Any person or organization with whom you have an "insured contract" which requires:

   i. that person or organization to be added as an "insured" under this policy or on a certificate of insurance; and
   ii. this policy to be primary and non-contributory to any like insurance available to the person or organization.

Each such person or organization is an "insured" for Liability Coverage. They are an "insured" only if that person or organization is an "insured" under in **SECTION II** of the Coverage Form.

The contract between the Named Insured and the person or organization is an "insured contract".

2. Section IV – Business Auto Conditions, B. General Conditions, 5. Other Insurance, paragraph d. is deleted and replaced by the following for the purpose of this endorsement only:

   d. When coverage provided under this Coverage Form is also provided under another Coverage Form or policy, we will provide coverage on a primary, non-contributory basis.

Includes copyrighted material of Insurance Services Office, Inc. with its permission.

TEXAS WAIVER OF OUR RIGHT TO RECOVER FROM OTHERS ENDORSEMENT

This endorsement applies only to the insurance provided by the policy because Texas is shown in Item 3.A. of the Information Page.

We have the right to recover our payments from anyone liable for an injury covered by this policy. We will not enforce our right against the person or organization named in the Schedule, but this waiver applies only with respect to bodily injury arising out of the operations described in the Schedule where you are required by a written contract to obtain this waiver from us.

This endorsement shall not operate directly or indirectly to benefit anyone not named in the Schedule.

The premium for this endorsement is shown in the Schedule.

Schedule

1. ( ) Specific Waiver
   Name of person or organization

   (X) Blanket Waiver
   Any person or organization for whom the Named Insured has agreed by written contract to furnish this waiver.

2. Operations:

3. Premium:
   The premium charge for this endorsement shall be 0.020 percent of the premium developed on payroll in connection with work performed for the above person(s) or organization(s) arising out of the operations described.
4. Advance Premium:

This endorsement changes the policy to which it is attached and is effective on the date issued unless otherwise stated.
(The information below is required only when this endorsement is issued subsequent to preparation of the policy.)

Endorsement Effective Policy No. Endorsement No.

Insured Premium $

Insurance Company Countersigned by _____

WC 42 03 04 B
(Ed. 6-14)

© Copyright 2014 National Council on Compensation Insurance, Inc. All Rights Reserved.

THIS ENDORSEMENT CHANGES THE POLICY. PLEASE READ IT CAREFULLY.

EARLIER NOTICE OF CANCELLATION PROVIDED BY US

Number of Days Notice 30

For any statutorily permitted reason **other than nonpayment of premium,** the number of days required for notice of cancellation is increased to the number of days shown in the Schedule above.

If this policy is cancelled by us we will send the Named Insured and any party listed in the following schedule notice of cancellation based on the number of days notice shown above.

SCHEDULE

Name of Person or Organization

The Name of Person or Organization is any person or organization holding a certificate of insurance issued for you, provided the certificate:

1. Refers to this policy;
2. States that notice of:

   a. Cancellation;
   b. Nonrenewal; or
   c. Material change reducing or restricting coverage;

   will be provided to that person or organization;
3. Is in effect at the time of the:

   a. Cancellation;
   b. Nonrenewal; or
   c. Material change reducing or restricting coverage; and
4. Is on file at your agent or broker's office for this policy.

Mailing Address

The Mailing Address is the address shown for that person or organization in that certificate of insurance.

EXHIBIT D - Building Wage Rate rev 01/05/2024

"General Decision Number: TX20240261 01/05/2024

Superseded General Decision Number: TX20230261

State: Texas

Construction Type: Building

County: Midland County in Texas.

BUILDING CONSTRUCTION PROJECTS (does not include single family homes or apartments up to and including 4 stories).

Note: Contracts subject to the Davis-Bacon Act are generally required to pay at least the applicable minimum wage rate required under Executive Order 14026 or Executive Order 13658. Please note that these Executive Orders apply to covered contracts entered into by the federal government that are subject to the Davis-Bacon Act itself, but do not apply to contracts subject only to the Davis-Bacon Related Acts, including those set forth at 29 CFR 5.1(a)(1).

If the contract is entered into on or after January 30, 2022, or the contract is renewed or extended (e.g., an option is exercised) on or after January 30, 2022:	. Executive Order 14026 generally applies to the contract. . The contractor must pay all covered workers at least $17.20 per hour (or the applicable wage rate listed on this wage determination, if it is higher) for all hours spent performing on the contract in 2024.
If the contract was awarded on or between January 1, 2015 and January 29, 2022, and the contract is not renewed or extended on or after January 30, 2022:	. Executive Order 13658 generally applies to the contract. . The contractor must pay all covered workers at least $12.90 per hour (or the applicable wage rate listed on this wage determination, if it is higher) for all hours spent performing on that contract in 2024.

The applicable Executive Order minimum wage rate will be adjusted annually. If this contract is covered by one of the Executive Orders and a classification considered necessary for performance of work on the contract does not appear on this wage determination, the contractor must still submit a conformance request.

Additional information on contractor requirements and worker protections under the Executive Orders is available at http://www.dol.gov/whd/govcontracts.

Modification Number 0 — Publication Date 01/05/2024

BOIL0074-003 07/01/2023

	Rates	Fringes
BOILERMAKER	$ 37.00	24.64

ENGI0178-005 06/01/2020

	Rates	Fringes
POWER EQUIPMENT OPERATOR		
(1) Tower Crane	$ 32.85	13.10
(2) Cranes with Pile Driving or Caisson Attachment and Hydraulic Crane 60 tons and above	$ 28.75	10.60
(3) Hydraulic cranes 59 Tons and under	$ 32.35	13.10

IRON0084-011 06/01/2023

	Rates	Fringes
IRONWORKER, ORNAMENTAL	$ 27.51	8.13

PLUM0404-001 09/01/2022

	Rates	Fringes
PLUMBER	$ 28.64	10.65

SUTX2014-037 07/21/2014

	Rates	Fringes
BRICKLAYER	$ 20.00	0.00
CARPENTER	$ 13.82 **	0.00
CEMENT MASON/CONCRETE FINISHER	$ 13.76 **	0.00
ELECTRICIAN	$ 23.18	6.31
INSULATOR - MECHANICAL (Duct, Pipe & Mechanical System Insulation)	$ 19.77	7.13
IRONWORKER, REINFORCING	$ 12.27 **	0.00
IRONWORKER, STRUCTURAL	$ 22.16	5.26
LABORER: Common or General	$ 11.80 **	0.00
LABORER: Mason Tender - Brick	$ 11.38 **	0.00
LABORER: Mason Tender - Cement/Concrete	$ 10.58 **	0.00
LABORER: Pipelayer	$ 12.49 **	2.13
LABORER: Roof Tearoff	$ 11.28 **	0.00
OPERATOR: Backhoe/Excavator/Trackhoe	$ 14.25 **	0.00
OPERATOR: Bobcat/Skid Steer/Skid Loader	$ 13.93 **	0.00
OPERATOR: Bulldozer	$ 18.29	1.31
OPERATOR: Drill	$ 16.22 **	0.34
OPERATOR: Forklift	$ 14.83 **	0.00
OPERATOR: Grader/Blade	$ 13.37 **	0.00
OPERATOR: Loader	$ 13.55 **	0.94
OPERATOR: Mechanic	$ 17.52	3.33
OPERATOR: Paver (Asphalt, Aggregate, and Concrete)	$ 16.03 **	0.00

OPERATOR: Roller.....$ 12.70 ** 0.00

PAINTER (Brush, Roller, and
Spray).....$ 15.00 ** 0.73

PIPEFITTER.....$ 25.80 8.55

ROOFER.....$ 14.75 ** 0.00

SHEET METAL WORKER (HVAC Duct
Installation Only).....$ 22.73 7.52

SHEET METAL WORKER, Excludes
HVAC Duct Installation.....$ 19.50 0.00

TILE FINISHER.....$ 11.22 ** 0.00

TILE SETTER.....$ 14.74 ** 0.00

TRUCK DRIVER: Dump Truck.....$ 12.39 ** 1.18

TRUCK DRIVER: Flatbed Truck.....$ 19.65 8.57

TRUCK DRIVER: Semi-Trailer
Truck.....$ 12.50 ** 0.00

TRUCK DRIVER: Water Truck.....$ 12.00 ** 4.11

WELDERS - Receive rate prescribed for craft performing
operation to which welding is incidental.

==========

** Workers in this classification may be entitled to a higher
minimum wage under Executive Order 14026 ($17.20) or 13658
($12.90). Please see the Note at the top of the wage
determination for more information. Please also note that the
minimum wage requirements of Executive Order 14026 are not
currently being enforced as to any contract or subcontract to
which the states of Texas, Louisiana, or Mississippi, including
their agencies, are a party.

Note: Executive Order (EO) 13706, Establishing Paid Sick Leave
for Federal Contractors applies to all contracts subject to the
Davis-Bacon Act for which the contract is awarded (and any
solicitation was issued) on or after January 1, 2017. If this
contract is covered by the EO, the contractor must provide

employees with 1 hour of paid sick leave for every 30 hours they work, up to 56 hours of paid sick leave each year. Employees must be permitted to use paid sick leave for their own illness, injury or other health-related needs, including preventive care; to assist a family member (or person who is like family to the employee) who is ill, injured, or has other health-related needs, including preventive care; or for reasons resulting from, or to assist a family member (or person who is like family to the employee) who is a victim of, domestic violence, sexual assault, or stalking. Additional information on contractor requirements and worker protections under the EO is available at https://www.dol.gov/agencies/whd/government-contracts.

Unlisted classifications needed for work not included within the scope of the classifications listed may be added after award only as provided in the labor standards contract clauses (29CFR 5.5 (a) (1) (iii)).

The body of each wage determination lists the classification and wage rates that have been found to be prevailing for the cited type(s) of construction in the area covered by the wage determination. The classifications are listed in alphabetical order of ""identifiers"" that indicate whether the particular rate is a union rate (current union negotiated rate for local), a survey rate (weighted average rate) or a union average rate (weighted union average rate).

Union Rate Identifiers

A four letter classification abbreviation identifier enclosed in dotted lines beginning with characters other than ""SU"" or ""UAVG"" denotes that the union classification and rate were prevailing for that classification in the survey. Example: PLUM0198-005 07/01/2014. PLUM is an abbreviation identifier of the union which prevailed in the survey for this classification, which in this example would be Plumbers. 0198 indicates the local union number or district council number where applicable, i.e., Plumbers Local 0198. The next number, 005 in the example, is an internal number used in processing the wage determination. 07/01/2014 is the effective date of the most current negotiated rate, which in this example is July 1, 2014.

Union prevailing wage rates are updated to reflect all rate

changes in the collective bargaining agreement (CBA) governing this classification and rate.

Survey Rate Identifiers

Classifications listed under the ""SU"" identifier indicate that no one rate prevailed for this classification in the survey and the published rate is derived by computing a weighted average rate based on all the rates reported in the survey for that classification. As this weighted average rate includes all rates reported in the survey, it may include both union and non-union rates. Example: SULA2012-007 5/13/2014. SU indicates the rates are survey rates based on a weighted average calculation of rates and are not majority rates. LA indicates the State of Louisiana. 2012 is the year of survey on which these classifications and rates are based. The next number, 007 in the example, is an internal number used in producing the wage determination. 5/13/2014 indicates the survey completion date for the classifications and rates under that identifier.

Survey wage rates are not updated and remain in effect until a new survey is conducted.

Union Average Rate Identifiers

Classification(s) listed under the UAVG identifier indicate that no single majority rate prevailed for those classifications; however, 100% of the data reported for the classifications was union data. EXAMPLE: UAVG-OH-0010 08/29/2014. UAVG indicates that the rate is a weighted union average rate. OH indicates the state. The next number, 0010 in the example, is an internal number used in producing the wage determination. 08/29/2014 indicates the survey completion date for the classifications and rates under that identifier.

A UAVG rate will be updated once a year, usually in January of each year, to reflect a weighted average of the current negotiated/CBA rate of the union locals from which the rate is based.

WAGE DETERMINATION APPEALS PROCESS

1.) Has there been an initial decision in the matter? This can be:

* an existing published wage determination
* a survey underlying a wage determination
* a Wage and Hour Division letter setting forth a position on a wage determination matter
* a conformance (additional classification and rate) ruling

On survey related matters, initial contact, including requests for summaries of surveys, should be with the Wage and Hour National Office because National Office has responsibility for the Davis-Bacon survey program. If the response from this initial contact is not satisfactory, then the process described in 2.) and 3.) should be followed.

With regard to any other matter not yet ripe for the formal process described here, initial contact should be with the Branch of Construction Wage Determinations. Write to:

Branch of Construction Wage Determinations
Wage and Hour Division
U.S. Department of Labor
200 Constitution Avenue, N.W.
Washington, DC 20210

2.) If the answer to the question in 1.) is yes, then an interested party (those affected by the action) can request review and reconsideration from the Wage and Hour Administrator (See 29 CFR Part 1.8 and 29 CFR Part 7). Write to:

Wage and Hour Administrator
U.S. Department of Labor
200 Constitution Avenue, N.W.
Washington, DC 20210

The request should be accompanied by a full statement of the interested party's position and by any information (wage payment data, project description, area practice material, etc.) that the requestor considers relevant to the issue.

3.) If the decision of the Administrator is not favorable, an interested party may appeal directly to the Administrative Review Board (formerly the Wage Appeals Board). Write to:

Administrative Review Board
U.S. Department of Labor
200 Constitution Avenue, N.W.
Washington, DC 20210

4.) All decisions by the Administrative Review Board are final.

==========

END OF GENERAL DECISION"

City Council Meeting

Item Number: 13

Meeting Date: September 24, 2024

To: City Council / City Manager

From: Erika Martinez, Manager, Purchasing

Subject: RESOLUTION APPROVING A CONTRACT WITH DECOR IQ, LLC, THROUGH BUYBOARD, FOR SERVICES RELATED TO THE INSTALLATION OF EVENT LIGHTING AND DECORATIVE DISPLAYS IN DOWNTOWN MIDLAND FOR A TOTAL COST OF $1,622,706.03 (DISTRICT 2) (GENERAL SERVICES) (STRENGTHEN AND SUSTAIN OUR INFRASTRUCTURE)

Purpose:

Resolution awarding a contract to Decor IQ, LLC through Buyboard contract 735-24 for the lease of Lighting for the City Downtown area for a cost of $1,622,706.03 for three (3) years.

Recommended City Council Action:

Approve

Fiscal Impact:

$610,722.51 is available in the Hotel Motel Fund unappropriated fund balance and will be appropriated for this purpose for the first year. The remainder will be appropriated from the Hotel Motel Unappropriated Fund Balance over the next two (2) years.

Strategic Priority:

(Strengthen and Sustain our Infrastructure)

Discussion:

Staff recommends awarding a contract to Décor IQ, LLC through Buyboard contract 735-24 for the lease of Lighting for the City Downtown area through Buyboard contract 735-24. We are members of this cooperative and Subchapter F, Section 271.102 of the Local Government

Code provides that a local government may participate in a cooperative purchasing program and that purchasing goods or services under Subchapter F satisfies any state law requiring the local government to seek competitive bids for those purchases. Please see the attached memo from Taylor Novak, Chief of Staff, for more information.

Therefore, please consider a resolution awarding a contract to Decor IQ, LLC of San Antonio, Texas through Buyboard contract 735-24 for the lease of Lighting for the City Downtown area for a cost of $1,622,706.03 for three (3) years.

Morris Williams Jr.

City Manager's Office

MIDLAND
Be the Energy!

OFFICE OF THE CITY MANAGER

Mayor
Lori Blong

At-Large
Robin Poole

At-Large
Eric Davidson

District 1
Scott Dufford

District 2
John Norman

District 3
Jack Ladd

District 4
Amy Stretcher-Burkes

City Manager
Tommy Gonzalez

To: Midland City Council
From: Chief of Staff, Taylor Novak
Date: September 16, 2024
Subject: Support for the Midland Holiday Lights Project Appropriation of Funds

Overview:
Mayor and Council, I am writing to express my strong support for the Midland Holiday Lights Project, an initiative designed to enhance the quality of life in our city, create a vibrant sense of place, and attract visitors from across the region. This project aims to bring a festive, family-friendly atmosphere to Midland during the holiday season, driving economic benefits for local businesses while showcasing our community's unique spirit.

Key Benefits:

1. **Boost to Quality of Life:**
   The Holiday Lights Project will offer residents a chance to enjoy a local, visually stunning, and joyful experience throughout the holiday season. By bringing the community together for a shared celebration, we aim to foster a deeper sense of belonging and pride in Midland.

2. **Tourism and Regional Attraction:**
   The event has the potential to attract visitors from surrounding areas, making Midland a holiday destination. Similar projects in other cities have proven to be strong regional draws, leading to increased foot traffic and visibility for local attractions, restaurants, and retailers. This can result in a positive ripple effect across multiple sectors.

3. **Economic Impact on Local Businesses:**
   With the influx of both residents and tourists, the project will directly benefit our local economy. Visitors attending the event are likely to shop at local stores, dine at restaurants, and stay at hotels, increasing sales and creating a boost during the critical holiday shopping season.

4. **Strengthening Midland's Brand:**
   By investing in projects like this, Midland will further establish itself as a forward-thinking, dynamic city that values both economic growth and community well-being. A successful event will contribute to building a long-term reputation for Midland as a premier destination for seasonal events and family-friendly attractions.

Conclusion:
The Midland Holiday Lights Project represents a tremendous opportunity for our city to enhance quality of life, stimulate economic growth, and put Midland on the map as a regional holiday destination. I urge the City Council to fully support this initiative, which will benefit both our residents and local businesses while contributing to the city's vibrant future.

Thank you for your consideration.

Sincerely,
Taylor Novak
Chief of Staff

300 N Loraine, Midland TX 79701 | 432-685-7200 | www.midlandtexas.gov

RESOLUTION NO. _____

RESOLUTION APPROVING A CONTRACT WITH DECOR IQ, LLC, THROUGH BUYBOARD, FOR SERVICES RELATED TO THE INSTALLATION OF EVENT LIGHTING AND DECORATIVE DISPLAYS IN DOWNTOWN MIDLAND FOR A TOTAL COST OF $1,622,706.03

WHEREAS, Buyboard is a cooperative purchasing agency with which the City participates with on purchases through a cooperative purchasing program in accordance with TEX. LOC. GOV'T CODE § 271.102; and

WHEREAS, Decor IQ, LLC, has submitted a total proposed cost to the City of $1,622,706.03, through Buyboard, to provide services related to the installation of event lighting and decorative displays in downtown Midland; and

WHEREAS, the Council finds the price proposed by Decor IQ, LLC, through Buyboard for said installation and services to be fair and reasonable; and

WHEREAS, the City Council finds it to be in the public interest to approve a contract with Decor IQ, LLC, to provide services related to the installation of event lighting and decorative displays in downtown Midland through Buyboard;

NOW, THEREFORE, BE IT RESOLVED BY THE CITY COUNCIL OF THE CITY OF MIDLAND, TEXAS:

SECTION ONE. That the City Manager and City Secretary are hereby authorized and directed to execute and attest, respectively, on behalf of the City of Midland, a contract with Decor IQ, LLC, for services related to the installation of event lighting and decorative displays in downtown Midland, through Buyboard, for a total cost of $1,622,706.03. Said contract being in a form substantially similar to that of Exhibit A, which is attached hereto and incorporated herein for all purposes.

SECTION TWO. That $610,722.51 is available in the Hotel Motel Fund unappropriated fund balance and shall be appropriated for purposes consistent with this Resolution to provide for the costs associated with the first year of the term of the contract;

the remaining funds shall be appropriated from the Hotel Motel Fund unappropriated fund balance over the remaining years of the term of the contract.

SECTION THREE. That the City Comptroller is hereby authorized and directed to pay Decor IQ, LLC, in accordance with the provisions of the above-referenced contract from funds available in the FY 2024 General Fund operating budget upon receipt of proper invoices or statements approved by the City Manager.

On motion of Council member _____, seconded by Council member _____, the above and foregoing resolution was adopted by the City Council of the City of Midland at a regular meeting on the _____ day of _____, A.D., 2024, by the following vote:

Council members voting "AYE":

Council members voting "NAY":

_____
Lori Merritt Blong, Mayor

ATTEST:

_____
Marcia Bentley-German, City Secretary

RECOMMENDED AND APPROVED:

_____
Tommy Gonzalez, City Manager

APPROVED AS TO CONTENT
AND COMPLETENESS:

_____
Regina Stephenson, General Services Director

APPROVED AS TO FORM ONLY:

_____
John Ohnemiller, City Attorney

CITY OF MIDLAND
SERVICE CONTRACT
#24007323

THIS CONTRACT, effective this 25th day of September 2024, by and between the City of Midland, hereinafter referred to as the "CITY" and Decor IQ, LLC, hereinafter referred to as the "COMPANY".

Projected Annual Cost: _Year 1: $610,722.51; Year 2: $505,991.76; Year 3: $505,991.76 for a total cost of $1,622,706.03_

For and in consideration of the payments and Contracts hereinafter mentioned, COMPANY and CITY hereby agree as follows:

1. COMPANY shall perform all work as set forth in the Quote, which is incorporated as part of this Contract as Exhibit "A". In performing the work, COMPANY shall, at its own cost and expense furnish all the materials, supplies, machinery, equipment, tools, superintendence, labor, insurance, and other accessories and services necessary to complete the said work, in accordance with the conditions and prices stated in Exhibit "A"; all of which is made a part hereof and collectively evidence and constitute the entire Contract.

2. COMPANY hereby agrees to commence work within fifteen (15) days after the date written notice to do so shall have been given to it by CITY.

3. CITY agrees to pay COMPANY in current funds the price or prices shown in the Quote, which forms a part of this Contract. No payment shall be due until the monthly service report has been delivered to CITY.

4. COMPANY shall at all times exercise reasonable precaution for the safety of employees and others on or near the work and shall comply with all applicable provisions of federal, state and municipal laws and building codes. All machinery and equipment and other physical hazards shall be guarded in accordance with the "Manual of Accident Prevention in Construction" of Associated General Contractors of America, except where incompatible with federal, state or municipal laws or regulations.

5. INDEMNITY: COMPANY SHALL INDEMNIFY AND HOLD HARMLESS AND DEFEND CITY AND ALL OF CITY'S OFFICERS, AGENTS AND EMPLOYEES FROM ALL SUITS, ACTIONS, CLAIMS, DAMAGES, PERSONAL INJURIES, ACCIDENTAL DEATH, LOSSES, PROPERTY DAMAGE AND EXPENSES OF ANY CHARACTER WHATSOEVER, INCLUDING ATTORNEY'S FEES, BROUGHT FOR OR ON ACCOUNT OF ANY INJURIES OR DAMAGES

RECEIVED OR SUSTAINED BY ANY PERSON OR PERSONS OR PROPERTY, ON ACCOUNT OF ANY NEGLIGENT ACT OF COMPANY, IT'S AGENTS OR EMPLOYEES, OR ANY SUBCONTRACTOR, IN THE EXECUTION, SUPERVISION AND OPERATIONS GROWING OUT OF OR IN ANY WAY CONNECTED WITH THE PERFORMANCE OF THIS CONTRACT, AND COMPANY WILL BE REQUIRED TO PAY ANY JUDGMENT WITH COSTS WHICH MAY BE OBTAINED AGAINST CITY OR ANY OF ITS OFFICERS, AGENTS OR EMPLOYEES, INCLUDING ATTORNEY'S FEES. THE OBLIGATIONS CONTAINED IN THIS SECTION 5 SHALL SURVIVE THE TERMINATION OF THIS CONTRACT.

5.1. COMPANY SHALL INDEMNIFY AND HOLD HARMLESS AND DEFEND CITY AND ALL OF CITY'S OFFICERS, AGENTS AND EMPLOYEES FROM ALL SUITS, ACTIONS, CLAIMS, DAMAGES, PERSONAL INJURIES, ACCIDENTAL DEATH, PROPERTY DAMAGE, LOSSES, AND EXPENSES OF ANY CHARACTER WHATSOEVER INCLUDING ATTORNEY'S FEES, BROUGHT FOR OR ON ACCOUNT OF ANY INJURIES OR DAMAGES RECEIVED OR SUSTAINED BY ANY PERSON OR PERSONS OR PROPERTY, ON ACCOUNT OF ANY NEGLIGENT ACT OF CITY, CITY'S OFFICERS, AGENTS AND EMPLOYEES, WHETHER SUCH NEGLIGENT ACT WAS THE SOLE PROXIMATE CAUSE OF THE INJURY OR DAMAGE OR A PROXIMATE CAUSE JOINTLY AND CONCURRENTLY WITH COMPANY OR COMPANY'S EMPLOYEES, AGENTS OR SUBCONTRACTORS NEGLIGENCE IN THE EXECUTION, SUPERVISION AND OPERATIONS GROWING OUT OF OR IN ANY WAY CONNECTED WITH THE PERFORMANCE OF THIS CONTRACT, AND COMPANY WILL BE REQUIRED TO PAY ANY JUDGMENT WITH COSTS WHICH MAY BE OBTAINED AGAINST CITY OR ANY OF ITS OFFICERS, AGENTS OR EMPLOYEES, INCLUDING ATTORNEY'S FEES. THE OBLIGATIONS CONTAINED IN THIS SECTION 5.1 SHALL SURVIVE THE TERMINATION OF THIS CONTRACT.

5.2. COMPANY AGREES THAT IT WILL INDEMNIFY AND SAVE CITY HARMLESS FROM ALL CLAIMS GROWING OUT OF ANY DEMANDS OF SUBCONTRACTORS, LABORERS, WORKMEN, MECHANICS, MATERIALMEN, AND FURNISHERS OF MACHINERY AND PARTS THEREOF, EQUIPMENT, POWER TOOLS AND ALL SUPPLIES, INCURRED IN THE FURTHERANCE OF THE PERFORMANCE OF THIS CONTRACT. WHEN CITY SO DESIRES, COMPANY SHALL FURNISH SATISFACTORY EVIDENCE THAT ALL OBLIGATIONS OF THE NATURE HEREINABOVE DESIGNATED HAVE BEEN PAID, DISCHARGED OR WAIVED. COMPANY, ITS SURETIES AND INSURANCE CARRIERS SHALL DEFEND,

INDEMNIFY AND SAVE HARMLESS CITY AND ALL OF ITS OFFICERS, AGENTS AND EMPLOYEES FROM ALL SUITS, ACTIONS, OR CLAIMS OF ANY CHARACTER WHATSOEVER, BROUGHT FOR OR ON ACCOUNT OF ANY INJURIES OR DAMAGES RECEIVED OR SUSTAINED BY ANY PERSON OR PERSONS OR PROPERTY, ARISING FROM ANY ACT OF COMPANY OR ANY SUBCONTRACTOR, THEIR AGENTS OR EMPLOYEES, IN THE EXECUTION AND SUPERVISION OF THIS CONTRACT, AND WILL BE REQUIRED TO PAY ANY JUDGMENT WITH COSTS WHICH MAY BE OBTAINED AGAINST CITY OR ANY OF ITS OFFICERS, AGENTS, OR EMPLOYEES INCLUDING ATTORNEY'S FEES. THE OBLIGATIONS CONTAINED IN THIS SECTION 5.2 SHALL SURVIVE THE TERMINATION OF THIS CONTRACT.

6. COMPANY Hereby waives all rights to any attorney's fees awarded as a result of any action brought under the Texas Declaratory Judgment Act relating to this Contract.

7. CITY shall have the right to withhold payment for:

a. defective work not corrected;

b. completed service report not submitted;

c. failure of COMPANY to pay subcontractors or suppliers;

d. damage to other work or CITY's property or equipment; or

e. default of COMPANY in performance of this Contract.

The term of this agreement shall be for a period of three (3) years commencing on November 1, 2024, and terminating on January 31, 2027 unless sooner terminated as provided in this agreement.

8. COMPANY shall:

a. comply with all applicable laws, rules, codes and regulations of Local, State and U.S. Governments;

b. have a designated supervisor on the job site at all times work is in progress;

c. make no changes in the scheduled work without written authorization from CITY;

e. permit and facilitate inspection of the work in progress by CITY;

f. not willfully discriminate against any employee or applicant for employment because of race, color, religion, ancestry, sex or national origin;

g. be responsible for any damage caused by COMPANY to CITY property and repair such damage at his own cost;

h. remedy all defects in workmanship which develop within a period of one (l) year from the date of service report acceptance by CITY; and

i. not permit any worker to labor more than eight (8) hours during any one (l) calendar day or more than forty (40) hours during any one (l) calendar week, except as permitted by law; pay all royalties, license, and permit fees and applicable taxes required to execute this Contract.

9. In the event COMPANY is in noncompliance with any of the covenants or provisions of this Contract, and such noncompliance is not cured within thirty (30) days after receipt of written notice from CITY, CITY may terminate this Contract at the end of said thirty (30) day period, and may seek such other remedies as may be available in law or equity. Notwithstanding the above, CITY may, at its option, terminate this Contract in the event COMPANY fails on at least three (3) occasions to provide emergency services in a timely manner as required by the Specifications.

10. Failure of CITY to declare any default immediately upon occurrence thereof, or delay in taking any action in connection therewith, shall not waive COMPANY's responsibility to rectify such default, but CITY shall have the right to declare any such default at any time and take such action as might be lawful or authorized hereunder, either in law or in equity.

11. Any notice which may or shall be given under the terms of this Contract shall, unless otherwise provided herein, be in writing and shall be either delivered by hand or sent by United States Registered or Certified Mail, postage prepaid:

To CITY:	City of Midland, Texas
(If mailed)	P. O. Box 1152
	Midland, Texas 79702
(If hand delivered)	300 North Loraine
	Suite 220
	Midland, Texas 79701
To COMPANY.	Decor IQ, LLC
	1310 W Laurel
	San Antonio, Texas 78201

The above addresses may be changed at any time by providing written notice to the other party.

12. **GOVERNING LAW AND VENUE:** This contract shall be governed by the laws of the State of Texas. All performance and payment made pursuant to this contract shall be deemed to have occurred in Midland County, Texas. The obligations and undertakings of each of the parties to this Agreement shall be deemed to have occurred in Midland County, Texas. Exclusive venue for any claims, suits or any other action arising from or connected in any way to this contract or the performance of this contract shall be in

Midland County, Texas.

13. This obligation and undertakings of each of the parties to this Contract shall be performed in Midland County, Texas.

14. This Contract may not be altered, changed or amended, except by an instrument in writing signed by all parties hereto.

15. This Contract and all incorporated Contract documents constitute the entire agreement among CITY and COMPANY; no prior written or contemporaneous oral promises or representations shall be binding.

16. **PROMPT PAY ACT** – CITY and COMPANY agree that Texas Government Code, Chapter 2251, Payment for Goods and Services (the "Prompt Pay Act") does not waive governmental immunity.

17. RELEASE: NOTWITHSTANDING ANY OTHER PROVISION CONTAINED HEREIN, COMPANY HEREBY RELEASES, ACQUITS, RELINQUISHES AND FOREVER DISCHARGES CITY AND CITY'S COUNCIL MEMBERS, EMPLOYEES, AND OFFICERS FROM ANY AND ALL DEMANDS, CLAIMS, DAMAGES OR CAUSES OF ACTION OF ANY KIND WHATSOEVER THAT COMPANY HAS OR MIGHT HAVE IN THE FUTURE, INCLUDING, BUT NOT LIMITED TO, BREACH OF CONTRACT, QUANTUM MERUIT, CLAIMS UNDER THE DUE PROCESS AND TAKINGS CLAUSES OF THE TEXAS AND UNITED STATES CONSTITUTIONS, TORT CLAIMS, OR CITY'S NEGLIGENCE. THE OBLIGATIONS CONTAINED IN THIS SECTION SHALL SURVIVE THE TERMINATION OF THIS CONTRACT.

18. WAIVER OF ATTORNEY FEES: BY EXECUTING THIS CONTRACT, COMPANY AGREES TO WAIVE AND DOES HEREBY KNOWINGLY, CONCLUSIVELY, VOLUNTARILY AND INTENTIONALLY WAIVE ANY CLAIM IT HAS OR MAY HAVE IN THE FUTURE AGAINST CITY REGARDING THE AWARD OR ATTORNEY'S FEES, WHICH ARE IN ANY WAY RELATED TO THIS CONTRACT, OR THE CONSTRUCTION, INTERPRETATION OR BREACH OF THIS CONTRACT. COMPANY SPECIFICALLY AGREES THAT IF COMPANY BRINGS OR COMMENCES ANY LEGAL ACTION OR PROCEEDING RELATED TO THIS CONTRACT, THE CONSTRUCTION, INTERPRETATION, VALIDITY OR BREACH OF THIS CONTRACT, INCLUDING, BUT NOT LIMITED TO, ANY ACTION PURSUANT TO THE PROVISIONS OF THE TEXAS UNIFORM DECLARATORY JUDGMENTS ACT (TEXAS CIVIL PRACTICE AND REMEDIES CODE SECTION 37.001, ET SEQ., AS AMENDED), OR

CHAPTER 271 OF THE TEXAS LOCAL GOVERNMENT CODE, COMPANY AGREES TO ABANDON, WAIVE AND RELINQUISH ANY AND ALL RIGHTS TO THE RECOVERY OF ATTORNEY'S FEES TO WHICH COMPANY MIGHT OTHERWISE BE ENTITLED.

COMPANY AGREES THAT THIS IS THE VOLUNTARY AND INTENTIONAL RELINQUISHMENT AND ABANDONMENT OF A PRESENTLY-EXISTING KNOWN RIGHT. COMPANY ACKNOWLEDGES THAT IT UNDERSTANDS ALL TERMS AND CONDITIONS OF THIS CONTRACT. COMPANY FURTHER ACKNOWLEDGES AND AGREES THAT THERE WAS AND IS NO DISPARITY OF BARGAINING POWER BETWEEN CITY AND COMPANY. THIS SECTION SHALL NOT BE CONSTRUED OR INTERPRETED AS A WAIVER OR GOVERNMENTAL IMMUNITY AND SHALL SURVIVE THE TERMINATION OF THIS CONTRACT.

COMPANY IS RELYING ON ITS OWN JUDGMENT. COMPANY HAD THE OPPORTUNITY TO DISCUSS THIS CONTRACT WITH COMPETENT LEGAL COUNSEL PRIOR TO ITS EXECUTION.

19. **NOTICE OF ALLEGED BREACH; STATUTORY PREREQUISITES:** As a condition precedent to filing suit for alleged damages incurred by an alleged breach of an express or implied provision of this Contract, COMPANY or its legal representative, shall give the City Manager, or any other reasonable official of CITY, notice in writing (consisting of one (1) original and seven (7) copies of notice attached to a copy of this Contract) of such damages, duly verified, within one hundred twenty (120) days after the same has been sustained. The discovery rule does not apply to the giving of this notice. The notice shall include when, where and how the damages occurred, the apparent extent thereof, the amount of damages sustained, the amount for which COMPANY shall settle, the physical and mailing addresses of COMPANY at the time and date the claim was presented and the physical and mailing addresses of COMPANY for the six (6) months immediately preceding the occurrence of such damages, and the names and addresses of the witnesses upon whom COMPANY relies to establish its claim; and a failure to provide such written notification within the time and manner provided herein shall exonerate, excuse and except CITY from any liability whatsoever. CITY is under no obligation to provide notice to COMPANY that COMPANY's notice is insufficient. CITY reserves the right to request additional information regarding the claim. Said additional information shall be supplied within thirty (30) days after receipt of notice.

The statutory prerequisites outlined herein constitute jurisdictional requirements pursuant to

Section 271.154 of the Texas Local Government Code and Section 311.034 of the Texas Government Code. Notwithstanding any other provision to the contrary, COMPANY's failure to comply with the requirements of this Section shall perpetually bar COMPANY's claim for damages under Chapter 271 of the Texas Local Government Code, and Section 311.034 of the Texas Government Code, regardless if CITY has actual or constructive notice or knowledge of said claim or alleged damages. COMPANY agrees that the requirements of this entire Contract are reasonable. The provisions and obligations of this Section shall survive the termination of this Contract.

20. **GOVERNMENTAL IMMUNITY:** By executing this Contract CITY is not waiving its right of governmental immunity. CITY is retaining its immunity from suit. CITY is not granting consent to be sued by legislative resolution or action.

THERE IS NO WAIVER OF GOVERNMENTAL IMMUNITY.

21. **ASSIGNMENTS:** COMPANY shall not, either directly or indirectly assign all or any part of this Contract or any interest, right, or privilege herein, without the prior consent of CITY. The issue on whether or not to grant consent to an assignment is in the sole discretion of CITY.

22. **THIRD-PARTY BENEFICIARY:** CITY's approval of this Contract does not create a third-party beneficiary. There is no third-party beneficiary to this Contract. No person or entity who is not a party to this Contract shall have any third-party beneficiary or other rights hereunder.

23. **INDEPENDENT CONTRACTOR:** COMPANY shall perform all work and services described herein as an independent contractor and not as an officer, agent, servant, or employee of CITY. COMPANY shall have exclusive control of, and the exclusive right to control the details of the services and work to be performed hereunder, and all persons performing the same. COMPANY shall be solely responsible for the acts and omissions of its officers, agents, employees, contractors and subcontractors and the doctrine of *respondeat superior* shall not apply as between CITY and COMPANY, its officers, agents, employees, contractors and subcontractors. Nothing in this Contract shall be construed as creating a partnership or joint enterprise between CITY and COMPANY. No person performing any of the work and services described hereunder by COMPANY shall be considered an officer, agent, servant or employee of CITY. Further, it is specifically understood and agreed that nothing in this contract is intended or construed as creating a "Community of Pecuniary Interest" or an "Equal Right of Control" which would give rise to vicarious liability.

24. **CLEAN UP:** COMPANY shall promptly remove from CITY's premises all materials condemned by CITY's Representative on account of failure to conform to the Contract, whether actually incorporated

in the work or not, and COMPANY shall at its own expense promptly replace such condemned materials with other materials conforming to the requirements of the Contract. COMPANY shall also bear the expense of restoring all work of other contractors damaged by any such removal or replacement. If COMPANY does not remove and replace any such condemned materials within a reasonable time after a written notice by CITY, CITY may remove and replace such at COMPANY's expense.

25. **WARRANTY:** Neither the final payment nor any provision in this Contract shall relieve COMPANY of responsibility for faulty materials or workmanship, and he shall remedy any defects due thereto and pay for any damage to other work resulting therefrom, which shall appear within a period of one (1) year from the date of substantial completion. CITY shall give notice of observed defects with reasonable promptness.

26. **CONIDERATION:** The terms of this Contract are supported by good and valuable consideration, the receipt and sufficiency of which is hereby acknowledged by the parties named herein.

27. **TERMINATION AT WILL:** CITY may terminate this Contract at will for no or any reason upon giving at least one hundred eighty (180) days' written notice to COMPANY. The parties to this Contract understand and agree that it is in CITY's sole discretion to cancel the Contract during the term of the Contract. COMPANY has no expectation and has received no guarantees that this Contract will not be terminated before the end of the Contract term. The parties have bargained for the flexibility of terminating this Contract upon tender of the requisite notice at any time during the term of the Contract. All work and services under the Contract shall be suspended upon termination of the Contract becoming effective. Except for any termination due to COMPANY's default or noncompliance with the terms of this Contract, CITY's termination of this Contract pursuant to this Section shall result in the imposition of a cancellation fee (the "Cancellation Fee"), which CITY shall pay to COMPANY within thirty (30) days following the termination of this Contract. The Cancellation Fee shall be equal to twenty-five percent (25%) of the remaining unpaid amount due and payable to COMPANY under this Contract as of the date that this Contract is terminated.

28. **INSURANCE**

COMPANY shall at all times during the term of this Contract maintain and keep in full force and effect insurance in the following types and minimum amounts with companies authorized to do business in the State of Texas:

Commercial General Liability (including Contractual liability):

-Personal Injury: $1,000,000.00 per person

	$1,000,000.00 per occurrence
-Property Damage:	$500,000.00 per occurrence
Business Automobile Liability:	$250,000.00 combined single limit - Personal Injury and Property Damage
Worker's Compensation:	Statutory limits
Employers' Liability:	$500,000.00 per accident or occurrence

The Commercial General Liability shall be on a per project aggregate, including completed operations, and shall be on an occurrence basis.

The Business Automobile Liability insurance provided by COMPANY shall cover any auto for bodily injury and property damage, including owned vehicles, hired and non-city vehicles, and employee non-ownership, and the amount of such policy shall be a minimum of $250,000.00 covering any vehicle used for the execution of the work that is the subject of this Contract.

The Workers' Compensation coverage provided by COMPANY shall inure to the benefit of employees injured during the course and scope of their employment by COMPANY pursuant to this Contract. All insurance required pursuant to this Contract shall provide for a waiver of subrogation in favor of CITY. All insurance required pursuant to this Contract, except for Worker's Compensation Insurance, shall name CITY as an additional insured on a claims occurred basis. CITY shall be provided the notice by COMPANY's insurance provider not later than thirty (30) days prior to any reduction or termination of such coverage.

COMPANY shall contractually require all contractors, subcontractors, and sub-subcontractors that work on any portion of the work that is the subject of this Contract to obtain insurance coverage that meets or exceeds the policy requirements and minimum amounts specified herein. All contractors, subcontractors, and sub-subcontractors shall obtain insurance policies that provide blanket waivers of subrogation in favor of CITY of Midland and policies that name CITY of Midland as an additional insured on a claims occurred basis (except workers compensation).

The parties agree that, prior to the execution of the Contract, COMPANY shall provide one or more certificates of insurance specifically stating that these requirements have been met and subject to the approval of CITY. CITY shall not be required to provide any insurance whatsoever pursuant to this Contract.

COMPANY certifies that the certificate of insurance provided as required herein complies with the requirements of Chapter 1811 of the Texas Insurance Code.

29. **COMPLIANCE:** COMPANY agrees that it shall comply with Texas Government Code Section 2252.908, *et seq.*, as amended. COMPANY agrees that it shall comply with Texas Local Government Code Section 176.006, *et seq.*, as amended.

30. To the extent that Sections 2271.002, 2274.002 and 2276.002 of the Texas Government Code (collectively, the "Anti-Boycott Statutes") apply to this Contract, Company hereby verifies:

- that Company does not boycott Israel and will not boycott Israel during the term of this Contract;
- that Company does not boycott energy companies and will not boycott energy companies during the term of this Contract; and
- that Company does not have a practice, policy, guidance, or directive that discriminates against a firearm entity or firearm trade association and will not discriminate during the term of this Contract against a firearm entity or firearm trade association.

To the extent that the Anti-Boycott Statutes do not apply to this Contract, such verification is not required, and Company shall be deemed to have not made such verification.

31. **Records Retention and Production of Information.** To the extent that this Contract constitutes a contract described by Section 552.371 of the Texas Government Code, COMPANY shall: (i) preserve all contracting information related to this Contract as provided by the records retention requirements applicable to CITY for the duration of this Contract; (ii) promptly provide to CITY any contracting information related to the Contract that is in the custody or possession of COMPANY on request of CITY; and (iii) on completion of the Contract, either: (a) provide at no cost to CITY all contracting information related to the Contract that is in the custody or possession of COMPANY; or (b) preserve the contracting information related to the Contract as provided by the records retention requirements applicable to CITY.

32. **Public Information.** To the extent that this Contract is a contract described by Section 552.371 of the Texas Government Code, COMPANY agrees as follows in accordance with Section 552.372(b) of the Texas Government Code: The requirements of Subchapter J, Chapter 552, Government Code, may apply to this Contract, and COMPANY agrees that the contract can be terminated if COMPANY knowingly or intentionally fails to comply with a requirement of that subchapter.

33. **Conflict of Terms.** If a conflict of terms or language exists between: (i) any of the provisions of this Contract and (ii) any of the provisions contained in any exhibit(s) attached to this Contract, precedence shall be given to the provisions of this Contract. For the avoidance of any doubt, the provisions contained in this Contract shall supersede any and all conflicting provisions contained in any exhibit(s) attached hereto. Furthermore, the parties acknowledge and agree that any provision contained in an exhibit(s)

attached to this Contract that imposes an additional express or implied obligation on CITY is hereby made void and of no force or effect. CITY's sole and exclusive obligations under this Contract are contained in the provisions of this Contract that precede the signature page(s), which evidences the parties' execution.

34. Company agrees that all iron or steel products produced through a manufacturing process and used in the project that is the subject of this Contract shall be produced in the United States in accordance with Government Code § 2252.202, et seq., as amended.

EXECUTED IN DUPLICATE the day and year first above mentioned.

THE CITY OF MIDLAND, TEXAS

By: _____
Tommy Gonzalez, City Manager

ATTEST

_____
Marcia Bentley-German, City Governance Officer/City Secretary

APPROVED ONLY AS TO FORM

_____
John Ohnemiller, City Attorney

COMPANY:

By: _____

Name: _____

Title: _____

STATE OF_____§

§

COUNTY OF_____§

BEFORE ME, the undersigned authority, on this ____ day of _____, 2024 personally appeared, _____, an officer of Decor IQ, LLC, known to me to be the person and official whose name is subscribed to the forgoing instrument, and acknowledged to me that he executed the same as the act and deed of said corporation, for the purposes and consideration therein expressed, and in the capacity therein stated.

GIVEN UNDER MY HAND AND SEAL OF OFFICE this the ____day of _____, 2024.

_____
Notary Public, State of _____

DECOR IQ, LLC
1310 W Laurel
San Antonio, TX 78201-6433
USA
210-667-3603
accounting@decoriq.com

EXHIBIT "A"

Estimate

ADDRESS
City of Midland
300 N Loraine St
Midland, TX 79701

ESTIMATE 4738
DATE 08/16/2024

SALES REP
John Alban

DATE		DESCRIPTION	QTY	RATE	AMOUNT
	Lease - Installation/Removal	Garland Under (2) Convention Center Signs Install/Strike/Storage of (6) Decorated Garland (Color TBD)	1	2,780.33	2,780.33
	Lease - Installation/Removal	Garland for (3) Awnings Install/Strike/Storage of (86) Decorated Garland (Color TBD)	1	39,851.33	39,851.33
	Lease - Installation/Removal	Garland for Lamp Posts (40 Total) Install/Strike/Storage of (80) Decorated Garland (Color TBD)	1	31,665.60	31,665.60
	Lease - Installation/Removal	Walk Through Packages at Either Side of Stage Area Install/Strike/Storage of (2) Gift Package Entry Gate (includes bases)	1	22,666.69	22,666.69
	Lease - Installation/Removal	Walk Through Ornament Between Splash Pad and Convention Center Entrance Install/Strike/Storage of (1) 16' Walk Through Ornament (No Seating)	1	18,049.78	18,049.78
	Lease - Installation/Removal	Entrance of Park Install/Strike/Storage of (2) Custom Arch with Soldiers and Event Signage Above (Must Allow Truck Under for Events)	1	48,909.97	48,909.97
	Lease - Installation/Removal	Feature Tree in Green Area (1) New Drum Base for 50' Tree (No Entry)	1	29,183.54	29,183.54
	Lease - Installation/Removal	Feature Tree in Green Area Labor to Install (1) Customer Owned 50' Tree	1	15,444.00	15,444.00
	Lease - Installation/Removal	Feature Tree in Green Area Updated Ornamentation to Match Garland	1	23,016.83	23,016.83
	Lease - Installation/Removal	Interactive Area Install/Strike/Storage of (1) Tic Tac Toe Board	1	27,547.92	27,547.92

REMITTANCE ADDRESS:
14241 Commerce Dr
Garden Grove, CA 92843

Lease - Installation/Removal	Photo Op Area Install/Strike/Storage of (1) Train Photo Op	1	33,122.87	33,122.87
Lease - Installation/Removal	Photo Op Area Install/Strike/Storage of (1) Ornament Photo Op with Midland Logo Backdrop	1	8,099.54	8,099.54
Lease - Installation/Removal	Photo Op Area Install/Strike/Storage of (1) Happy Holidays Photo Frame	1	5,843.49	5,843.49
Lease - Installation/Removal	Photo Op Area Install/Strike/Storage of (1) 30' Gift Package Tree	1	50,681.84	50,681.84
Lease - Installation/Removal	Photo Op Area Install/Strike/Storage of (2) 3D Snowflake (base included)	1	16,507.29	16,507.29
Lease - Installation/Removal	Photo Op Area Install/Strike/Storage of (1) 3D Package (base included)	1	2,750.61	2,750.61
Lease - Installation/Removal	Monument Signs Install/Strike/Storage of (4) Angel's on Monument Sign	1	24,654.08	24,654.08
Lease - Installation/Removal	Tree Lighting of Focal Trees in (2) Park Install/Strike/Storage of (65) StarBurst Installed in Canopy of Tree	1	25,579.42	25,579.42
Product Purchase	Tree Lighting with Expandable Perm. Light Strands Per Document Attached (Price Includes Labor to Install)	1	104,730.75	104,730.75
Lease - Installation/Removal	Temporary Tree Lighting Per Document Attached	1	79,636.63	79,636.63

Payment Terms:
50% Deposit
25% Due at Completion of Installation
25% Prior to the Removal and Storage of Display
Pricing is a LEASE per year for (3) Years 2024-2026
Year 1 $610,722.51
Year 2 $505,991.76 (Perm. Tree Lighting Removed)
Year 3 $505,991.76

***Cancellation policy: If lease is cancelled prior to the completion of the 3 year term, a 25% Cancellation Fee will be charged on any remaining unbilled amount of contract total over three-year period.

SUBTOTAL	610,722.51
TAX	0.00
TOTAL	**$610,722.51**

Accepted By

Accepted Date

REMIT TO ADDRESS:
14241 Commerce Dr
Garden Grove, CA 92843

CITY OF MIDLAND
SERVICE CONTRACT
#24007323

THIS CONTRACT, effective this 25th day of September 2024, by and between the City of Midland, hereinafter referred to as the "CITY" and Decor IQ, LLC, hereinafter referred to as the "COMPANY".

Projected Annual Cost: _Year 1: $610,722.51; Year 2: $505,991.76; Year 3: $505,991.76 for a total cost of $1,622,706.03_

For and in consideration of the payments and Contracts hereinafter mentioned, COMPANY and CITY hereby agree as follows:

1. COMPANY shall perform all work as set forth in the Quote, which is incorporated as part of this Contract as Exhibit "A". In performing the work, COMPANY shall, at its own cost and expense furnish all the materials, supplies, machinery, equipment, tools, superintendence, labor, insurance, and other accessories and services necessary to complete the said work, in accordance with the conditions and prices stated in Exhibit "A"; all of which is made a part hereof and collectively evidence and constitute the entire Contract.

2. COMPANY hereby agrees to commence work within fifteen (15) days after the date written notice to do so shall have been given to it by CITY.

3. CITY agrees to pay COMPANY in current funds the price or prices shown in the Quote, which forms a part of this Contract. No payment shall be due until the monthly service report has been delivered to CITY.

4. COMPANY shall at all times exercise reasonable precaution for the safety of employees and others on or near the work and shall comply with all applicable provisions of federal, state and municipal laws and building codes. All machinery and equipment and other physical hazards shall be guarded in accordance with the "Manual of Accident Prevention in Construction" of Associated General Contractors of America, except where incompatible with federal, state or municipal laws or regulations.

5. INDEMNITY: COMPANY SHALL INDEMNIFY AND HOLD HARMLESS AND DEFEND CITY AND ALL OF CITY'S OFFICERS, AGENTS AND EMPLOYEES FROM ALL SUITS, ACTIONS, CLAIMS, DAMAGES, PERSONAL INJURIES, ACCIDENTAL DEATH, LOSSES, PROPERTY DAMAGE AND EXPENSES OF ANY CHARACTER WHATSOEVER, INCLUDING ATTORNEY'S FEES, BROUGHT FOR OR ON ACCOUNT OF ANY INJURIES OR DAMAGES

RECEIVED OR SUSTAINED BY ANY PERSON OR PERSONS OR PROPERTY, ON ACCOUNT OF ANY NEGLIGENT ACT OF COMPANY, IT'S AGENTS OR EMPLOYEES, OR ANY SUBCONTRACTOR, IN THE EXECUTION, SUPERVISION AND OPERATIONS GROWING OUT OF OR IN ANY WAY CONNECTED WITH THE PERFORMANCE OF THIS CONTRACT, AND COMPANY WILL BE REQUIRED TO PAY ANY JUDGMENT WITH COSTS WHICH MAY BE OBTAINED AGAINST CITY OR ANY OF ITS OFFICERS, AGENTS OR EMPLOYEES, INCLUDING ATTORNEY'S FEES. THE OBLIGATIONS CONTAINED IN THIS SECTION 5 SHALL SURVIVE THE TERMINATION OF THIS CONTRACT.

5.1. COMPANY SHALL INDEMNIFY AND HOLD HARMLESS AND DEFEND CITY AND ALL OF CITY'S OFFICERS, AGENTS AND EMPLOYEES FROM ALL SUITS, ACTIONS, CLAIMS, DAMAGES, PERSONAL INJURIES, ACCIDENTAL DEATH, PROPERTY DAMAGE, LOSSES, AND EXPENSES OF ANY CHARACTER WHATSOEVER INCLUDING ATTORNEY'S FEES, BROUGHT FOR OR ON ACCOUNT OF ANY INJURIES OR DAMAGES RECEIVED OR SUSTAINED BY ANY PERSON OR PERSONS OR PROPERTY, ON ACCOUNT OF ANY NEGLIGENT ACT OF CITY, CITY'S OFFICERS, AGENTS AND EMPLOYEES, WHETHER SUCH NEGLIGENT ACT WAS THE SOLE PROXIMATE CAUSE OF THE INJURY OR DAMAGE OR A PROXIMATE CAUSE JOINTLY AND CONCURRENTLY WITH COMPANY OR COMPANY'S EMPLOYEES, AGENTS OR SUBCONTRACTORS NEGLIGENCE IN THE EXECUTION, SUPERVISION AND OPERATIONS GROWING OUT OF OR IN ANY WAY CONNECTED WITH THE PERFORMANCE OF THIS CONTRACT, AND COMPANY WILL BE REQUIRED TO PAY ANY JUDGMENT WITH COSTS WHICH MAY BE OBTAINED AGAINST CITY OR ANY OF ITS OFFICERS, AGENTS OR EMPLOYEES, INCLUDING ATTORNEY'S FEES. THE OBLIGATIONS CONTAINED IN THIS SECTION 5.1 SHALL SURVIVE THE TERMINATION OF THIS CONTRACT.

5.2. COMPANY AGREES THAT IT WILL INDEMNIFY AND SAVE CITY HARMLESS FROM ALL CLAIMS GROWING OUT OF ANY DEMANDS OF SUBCONTRACTORS, LABORERS, WORKMEN, MECHANICS, MATERIALMEN, AND FURNISHERS OF MACHINERY AND PARTS THEREOF, EQUIPMENT, POWER TOOLS AND ALL SUPPLIES, INCURRED IN THE FURTHERANCE OF THE PERFORMANCE OF THIS CONTRACT. WHEN CITY SO DESIRES, COMPANY SHALL FURNISH SATISFACTORY EVIDENCE THAT ALL OBLIGATIONS OF THE NATURE HEREINABOVE DESIGNATED HAVE BEEN PAID, DISCHARGED OR WAIVED. COMPANY, ITS SURETIES AND INSURANCE CARRIERS SHALL DEFEND,

INDEMNIFY AND SAVE HARMLESS CITY AND ALL OF ITS OFFICERS, AGENTS AND EMPLOYEES FROM ALL SUITS, ACTIONS, OR CLAIMS OF ANY CHARACTER WHATSOEVER, BROUGHT FOR OR ON ACCOUNT OF ANY INJURIES OR DAMAGES RECEIVED OR SUSTAINED BY ANY PERSON OR PERSONS OR PROPERTY, ARISING FROM ANY ACT OF COMPANY OR ANY SUBCONTRACTOR, THEIR AGENTS OR EMPLOYEES, IN THE EXECUTION AND SUPERVISION OF THIS CONTRACT, AND WILL BE REQUIRED TO PAY ANY JUDGMENT WITH COSTS WHICH MAY BE OBTAINED AGAINST CITY OR ANY OF ITS OFFICERS, AGENTS, OR EMPLOYEES INCLUDING ATTORNEY'S FEES. THE OBLIGATIONS CONTAINED IN THIS SECTION 5.2 SHALL SURVIVE THE TERMINATION OF THIS CONTRACT.

6. COMPANY Hereby waives all rights to any attorney's fees awarded as a result of any action brought under the Texas Declaratory Judgment Act relating to this Contract.

7. CITY shall have the right to withhold payment for:

a. defective work not corrected;

b. completed service report not submitted;

c. failure of COMPANY to pay subcontractors or suppliers;

d. damage to other work or CITY's property or equipment; or

e. default of COMPANY in performance of this Contract.

The term of this agreement shall be for a period of three (3) years commencing on November 1, 2024, and terminating on January 31, 2027 unless sooner terminated as provided in this agreement.

8. COMPANY shall:

a. comply with all applicable laws, rules, codes and regulations of Local, State and U.S. Governments;

b. have a designated supervisor on the job site at all times work is in progress;

c. make no changes in the scheduled work without written authorization from CITY;

e. permit and facilitate inspection of the work in progress by CITY;

f. not willfully discriminate against any employee or applicant for employment because of race, color, religion, ancestry, sex or national origin;

g. be responsible for any damage caused by COMPANY to CITY property and repair such damage at his own cost;

h. remedy all defects in workmanship which develop within a period of one (l) year from the date of service report acceptance by CITY; and

i. not permit any worker to labor more than eight (8) hours during any one (l) calendar day or more than forty (40) hours during any one (l) calendar week, except as permitted by law; pay all royalties, license, and permit fees and applicable taxes required to execute this Contract.

9. In the event COMPANY is in noncompliance with any of the covenants or provisions of this Contract, and such noncompliance is not cured within thirty (30) days after receipt of written notice from CITY, CITY may terminate this Contract at the end of said thirty (30) day period, and may seek such other remedies as may be available in law or equity. Notwithstanding the above, CITY may, at its option, terminate this Contract in the event COMPANY fails on at least three (3) occasions to provide emergency services in a timely manner as required by the Specifications.

10. Failure of CITY to declare any default immediately upon occurrence thereof, or delay in taking any action in connection therewith, shall not waive COMPANY's responsibility to rectify such default, but CITY shall have the right to declare any such default at any time and take such action as might be lawful or authorized hereunder, either in law or in equity.

11. Any notice which may or shall be given under the terms of this Contract shall, unless otherwise provided herein, be in writing and shall be either delivered by hand or sent by United States Registered or Certified Mail, postage prepaid:

To CITY:	City of Midland, Texas
(If mailed)	P. O. Box 1152
	Midland, Texas 79702
(If hand delivered)	300 North Loraine
	Suite 220
	Midland, Texas 79701
To COMPANY.	Decor IQ, LLC
	1310 W Laurel
	San Antonio, Texas 78201

The above addresses may be changed at any time by providing written notice to the other party.

12. **GOVERNING LAW AND VENUE:** This contract shall be governed by the laws of the State of Texas. All performance and payment made pursuant to this contract shall be deemed to have occurred in Midland County, Texas. The obligations and undertakings of each of the parties to this Agreement shall be deemed to have occurred in Midland County, Texas. Exclusive venue for any claims, suits or any other action arising from or connected in any way to this contract or the performance of this contract shall be in

Midland County, Texas.

13. This obligation and undertakings of each of the parties to this Contract shall be performed in Midland County, Texas.

14. This Contract may not be altered, changed or amended, except by an instrument in writing signed by all parties hereto.

15. This Contract and all incorporated Contract documents constitute the entire agreement among CITY and COMPANY; no prior written or contemporaneous oral promises or representations shall be binding.

16. **PROMPT PAY ACT** – CITY and COMPANY agree that Texas Government Code, Chapter 2251, Payment for Goods and Services (the "Prompt Pay Act") does not waive governmental immunity.

17. RELEASE: NOTWITHSTANDING ANY OTHER PROVISION CONTAINED HEREIN, COMPANY HEREBY RELEASES, ACQUITS, RELINQUISHES AND FOREVER DISCHARGES CITY AND CITY'S COUNCIL MEMBERS, EMPLOYEES, AND OFFICERS FROM ANY AND ALL DEMANDS, CLAIMS, DAMAGES OR CAUSES OF ACTION OF ANY KIND WHATSOEVER THAT COMPANY HAS OR MIGHT HAVE IN THE FUTURE, INCLUDING, BUT NOT LIMITED TO, BREACH OF CONTRACT, QUANTUM MERUIT, CLAIMS UNDER THE DUE PROCESS AND TAKINGS CLAUSES OF THE TEXAS AND UNITED STATES CONSTITUTIONS, TORT CLAIMS, OR CITY'S NEGLIGENCE. THE OBLIGATIONS CONTAINED IN THIS SECTION SHALL SURVIVE THE TERMINATION OF THIS CONTRACT.

18. WAIVER OF ATTORNEY FEES: BY EXECUTING THIS CONTRACT, COMPANY AGREES TO WAIVE AND DOES HEREBY KNOWINGLY, CONCLUSIVELY, VOLUNTARILY AND INTENTIONALLY WAIVE ANY CLAIM IT HAS OR MAY HAVE IN THE FUTURE AGAINST CITY REGARDING THE AWARD OR ATTORNEY'S FEES, WHICH ARE IN ANY WAY RELATED TO THIS CONTRACT, OR THE CONSTRUCTION, INTERPRETATION OR BREACH OF THIS CONTRACT. COMPANY SPECIFICALLY AGREES THAT IF COMPANY BRINGS OR COMMENCES ANY LEGAL ACTION OR PROCEEDING RELATED TO THIS CONTRACT, THE CONSTRUCTION, INTERPRETATION, VALIDITY OR BREACH OF THIS CONTRACT, INCLUDING, BUT NOT LIMITED TO, ANY ACTION PURSUANT TO THE PROVISIONS OF THE TEXAS UNIFORM DECLARATORY JUDGMENTS ACT (TEXAS CIVIL PRACTICE AND REMEDIES CODE SECTION 37.001, ET SEQ., AS AMENDED), OR

CHAPTER 271 OF THE TEXAS LOCAL GOVERNMENT CODE, COMPANY AGREES TO ABANDON, WAIVE AND RELINQUISH ANY AND ALL RIGHTS TO THE RECOVERY OF ATTORNEY'S FEES TO WHICH COMPANY MIGHT OTHERWISE BE ENTITLED.

COMPANY AGREES THAT THIS IS THE VOLUNTARY AND INTENTIONAL RELINQUISHMENT AND ABANDONMENT OF A PRESENTLY-EXISTING KNOWN RIGHT. COMPANY ACKNOWLEDGES THAT IT UNDERSTANDS ALL TERMS AND CONDITIONS OF THIS CONTRACT. COMPANY FURTHER ACKNOWLEDGES AND AGREES THAT THERE WAS AND IS NO DISPARITY OF BARGAINING POWER BETWEEN CITY AND COMPANY. THIS SECTION SHALL NOT BE CONSTRUED OR INTERPRETED AS A WAIVER OR GOVERNMENTAL IMMUNITY AND SHALL SURVIVE THE TERMINATION OF THIS CONTRACT.

COMPANY IS RELYING ON ITS OWN JUDGMENT. COMPANY HAD THE OPPORTUNITY TO DISCUSS THIS CONTRACT WITH COMPETENT LEGAL COUNSEL PRIOR TO ITS EXECUTION.

19. **NOTICE OF ALLEGED BREACH; STATUTORY PREREQUISITES:** As a condition precedent to filing suit for alleged damages incurred by an alleged breach of an express or implied provision of this Contract, COMPANY or its legal representative, shall give the City Manager, or any other reasonable official of CITY, notice in writing (consisting of one (1) original and seven (7) copies of notice attached to a copy of this Contract) of such damages, duly verified, within one hundred twenty (120) days after the same has been sustained. The discovery rule does not apply to the giving of this notice. The notice shall include when, where and how the damages occurred, the apparent extent thereof, the amount of damages sustained, the amount for which COMPANY shall settle, the physical and mailing addresses of COMPANY at the time and date the claim was presented and the physical and mailing addresses of COMPANY for the six (6) months immediately preceding the occurrence of such damages, and the names and addresses of the witnesses upon whom COMPANY relies to establish its claim; and a failure to provide such written notification within the time and manner provided herein shall exonerate, excuse and except CITY from any liability whatsoever. CITY is under no obligation to provide notice to COMPANY that COMPANY's notice is insufficient. CITY reserves the right to request additional information regarding the claim. Said additional information shall be supplied within thirty (30) days after receipt of notice.

The statutory prerequisites outlined herein constitute jurisdictional requirements pursuant to

Section 271.154 of the Texas Local Government Code and Section 311.034 of the Texas Government Code. Notwithstanding any other provision to the contrary, COMPANY's failure to comply with the requirements of this Section shall perpetually bar COMPANY's claim for damages under Chapter 271 of the Texas Local Government Code, and Section 311.034 of the Texas Government Code, regardless if CITY has actual or constructive notice or knowledge of said claim or alleged damages. COMPANY agrees that the requirements of this entire Contract are reasonable. The provisions and obligations of this Section shall survive the termination of this Contract.

20. **GOVERNMENTAL IMMUNITY:** By executing this Contract CITY is not waiving its right of governmental immunity. CITY is retaining its immunity from suit. CITY is not granting consent to be sued by legislative resolution or action.

THERE IS NO WAIVER OF GOVERNMENTAL IMMUNITY.

21. **ASSIGNMENTS:** COMPANY shall not, either directly or indirectly assign all or any part of this Contract or any interest, right, or privilege herein, without the prior consent of CITY. The issue on whether or not to grant consent to an assignment is in the sole discretion of CITY.

22. **THIRD-PARTY BENEFICIARY:** CITY's approval of this Contract does not create a third-party beneficiary. There is no third-party beneficiary to this Contract. No person or entity who is not a party to this Contract shall have any third-party beneficiary or other rights hereunder.

23. **INDEPENDENT CONTRACTOR:** COMPANY shall perform all work and services described herein as an independent contractor and not as an officer, agent, servant, or employee of CITY. COMPANY shall have exclusive control of, and the exclusive right to control the details of the services and work to be performed hereunder, and all persons performing the same. COMPANY shall be solely responsible for the acts and omissions of its officers, agents, employees, contractors and subcontractors and the doctrine of *respondeat superior* shall not apply as between CITY and COMPANY, its officers, agents, employees, contractors and subcontractors. Nothing in this Contract shall be construed as creating a partnership or joint enterprise between CITY and COMPANY. No person performing any of the work and services described hereunder by COMPANY shall be considered an officer, agent, servant or employee of CITY. Further, it is specifically understood and agreed that nothing in this contract is intended or construed as creating a "Community of Pecuniary Interest" or an "Equal Right of Control" which would give rise to vicarious liability.

24. **CLEAN UP:** COMPANY shall promptly remove from CITY's premises all materials condemned by CITY's Representative on account of failure to conform to the Contract, whether actually incorporated

in the work or not, and COMPANY shall at its own expense promptly replace such condemned materials with other materials conforming to the requirements of the Contract. COMPANY shall also bear the expense of restoring all work of other contractors damaged by any such removal or replacement. If COMPANY does not remove and replace any such condemned materials within a reasonable time after a written notice by CITY, CITY may remove and replace such at COMPANY's expense.

25. **WARRANTY:** Neither the final payment nor any provision in this Contract shall relieve COMPANY of responsibility for faulty materials or workmanship, and he shall remedy any defects due thereto and pay for any damage to other work resulting therefrom, which shall appear within a period of one (1) year from the date of substantial completion. CITY shall give notice of observed defects with reasonable promptness.

26. **CONIDERATION:** The terms of this Contract are supported by good and valuable consideration, the receipt and sufficiency of which is hereby acknowledged by the parties named herein.

27. **TERMINATION AT WILL:** CITY may terminate this Contract at will for no or any reason upon giving at least one hundred eighty (180) days' written notice to COMPANY. The parties to this Contract understand and agree that it is in CITY's sole discretion to cancel the Contract during the term of the Contract. COMPANY has no expectation and has received no guarantees that this Contract will not be terminated before the end of the Contract term. The parties have bargained for the flexibility of terminating this Contract upon tender of the requisite notice at any time during the term of the Contract. All work and services under the Contract shall be suspended upon termination of the Contract becoming effective. Except for any termination due to COMPANY's default or noncompliance with the terms of this Contract, CITY's termination of this Contract pursuant to this Section shall result in the imposition of a cancellation fee (the "Cancellation Fee"), which CITY shall pay to COMPANY within thirty (30) days following the termination of this Contract. The Cancellation Fee shall be equal to twenty-five percent (25%) of the remaining unpaid amount due and payable to COMPANY under this Contract as of the date that this Contract is terminated.

28. **INSURANCE**

COMPANY shall at all times during the term of this Contract maintain and keep in full force and effect insurance in the following types and minimum amounts with companies authorized to do business in the State of Texas:

Commercial General Liability (including Contractual liability):

-Personal Injury: $1,000,000.00 per person

	$1,000,000.00 per occurrence
-Property Damage:	$500,000.00 per occurrence
Business Automobile Liability:	$250,000.00 combined single limit - Personal Injury and Property Damage
Worker's Compensation:	Statutory limits
Employers' Liability:	$500,000.00 per accident or occurrence

The Commercial General Liability shall be on a per project aggregate, including completed operations, and shall be on an occurrence basis.

The Business Automobile Liability insurance provided by COMPANY shall cover any auto for bodily injury and property damage, including owned vehicles, hired and non-city vehicles, and employee non-ownership, and the amount of such policy shall be a minimum of $250,000.00 covering any vehicle used for the execution of the work that is the subject of this Contract.

The Workers' Compensation coverage provided by COMPANY shall inure to the benefit of employees injured during the course and scope of their employment by COMPANY pursuant to this Contract. All insurance required pursuant to this Contract shall provide for a waiver of subrogation in favor of CITY. All insurance required pursuant to this Contract, except for Worker's Compensation Insurance, shall name CITY as an additional insured on a claims occurred basis. CITY shall be provided the notice by COMPANY's insurance provider not later than thirty (30) days prior to any reduction or termination of such coverage.

COMPANY shall contractually require all contractors, subcontractors, and sub-subcontractors that work on any portion of the work that is the subject of this Contract to obtain insurance coverage that meets or exceeds the policy requirements and minimum amounts specified herein. All contractors, subcontractors, and sub-subcontractors shall obtain insurance policies that provide blanket waivers of subrogation in favor of CITY of Midland and policies that name CITY of Midland as an additional insured on a claims occurred basis (except workers compensation).

The parties agree that, prior to the execution of the Contract, COMPANY shall provide one or more certificates of insurance specifically stating that these requirements have been met and subject to the approval of CITY. CITY shall not be required to provide any insurance whatsoever pursuant to this Contract.

COMPANY certifies that the certificate of insurance provided as required herein complies with the requirements of Chapter 1811 of the Texas Insurance Code.

29. **COMPLIANCE:** COMPANY agrees that it shall comply with Texas Government Code Section 2252.908, *et seq.*, as amended. COMPANY agrees that it shall comply with Texas Local Government Code Section 176.006, *et seq.*, as amended.

30. To the extent that Sections 2271.002, 2274.002 and 2276.002 of the Texas Government Code (collectively, the "Anti-Boycott Statutes") apply to this Contract, Company hereby verifies:

- that Company does not boycott Israel and will not boycott Israel during the term of this Contract;
- that Company does not boycott energy companies and will not boycott energy companies during the term of this Contract; and
- that Company does not have a practice, policy, guidance, or directive that discriminates against a firearm entity or firearm trade association and will not discriminate during the term of this Contract against a firearm entity or firearm trade association.

To the extent that the Anti-Boycott Statutes do not apply to this Contract, such verification is not required, and Company shall be deemed to have not made such verification.

31. **Records Retention and Production of Information.** To the extent that this Contract constitutes a contract described by Section 552.371 of the Texas Government Code, COMPANY shall: (i) preserve all contracting information related to this Contract as provided by the records retention requirements applicable to CITY for the duration of this Contract; (ii) promptly provide to CITY any contracting information related to the Contract that is in the custody or possession of COMPANY on request of CITY; and (iii) on completion of the Contract, either: (a) provide at no cost to CITY all contracting information related to the Contract that is in the custody or possession of COMPANY; or (b) preserve the contracting information related to the Contract as provided by the records retention requirements applicable to CITY.

32. **Public Information.** To the extent that this Contract is a contract described by Section 552.371 of the Texas Government Code, COMPANY agrees as follows in accordance with Section 552.372(b) of the Texas Government Code: The requirements of Subchapter J, Chapter 552, Government Code, may apply to this Contract, and COMPANY agrees that the contract can be terminated if COMPANY knowingly or intentionally fails to comply with a requirement of that subchapter.

33. **Conflict of Terms.** If a conflict of terms or language exists between: (i) any of the provisions of this Contract and (ii) any of the provisions contained in any exhibit(s) attached to this Contract, precedence shall be given to the provisions of this Contract. For the avoidance of any doubt, the provisions contained in this Contract shall supersede any and all conflicting provisions contained in any exhibit(s) attached hereto. Furthermore, the parties acknowledge and agree that any provision contained in an exhibit(s)

attached to this Contract that imposes an additional express or implied obligation on CITY is hereby made void and of no force or effect. CITY's sole and exclusive obligations under this Contract are contained in the provisions of this Contract that precede the signature page(s), which evidences the parties' execution.

34. Company agrees that all iron or steel products produced through a manufacturing process and used in the project that is the subject of this Contract shall be produced in the United States in accordance with Government Code § 2252.202, et seq., as amended.

EXECUTED IN DUPLICATE the day and year first above mentioned.

THE CITY OF MIDLAND, TEXAS

By: _____
Tommy Gonzalez, City Manager

ATTEST

_____
Marcia Bentley-German, City Governance Officer/City Secretary

APPROVED ONLY AS TO FORM

_____
John Ohnemiller, City Attorney

COMPANY:

By: _____

Name: _____

Title: _____

STATE OF_____§

§

COUNTY OF_____§

BEFORE ME, the undersigned authority, on this ____ day of _____, 2024 personally appeared, _____, an officer of Decor IQ, LLC, known to me to be the person and official whose name is subscribed to the forgoing instrument, and acknowledged to me that he executed the same as the act and deed of said corporation, for the purposes and consideration therein expressed, and in the capacity therein stated.

GIVEN UNDER MY HAND AND SEAL OF OFFICE this the ____day of _____, 2024.

_____
Notary Public, State of _____

DECOR IQ, LLC
1310 W Laurel
San Antonio, TX 78201-6433
USA
210-667-3603
accounting@decoriq.com

EXHIBIT "A"

Estimate

ADDRESS
City of Midland
300 N Loraine St
Midland, TX 79701

ESTIMATE 4738
DATE 08/16/2024

SALES REP
John Alban

DATE		DESCRIPTION	QTY	RATE	AMOUNT
	Lease - Installation/Removal	Garland Under (2) Convention Center Signs Install/Strike/Storage of (6) Decorated Garland (Color TBD)	1	2,780.33	2,780.33
	Lease - Installation/Removal	Garland for (3) Awnings Install/Strike/Storage of (86) Decorated Garland (Color TBD)	1	39,851.33	39,851.33
	Lease - Installation/Removal	Garland for Lamp Posts (40 Total) Install/Strike/Storage of (80) Decorated Garland (Color TBD)	1	31,665.60	31,665.60
	Lease - Installation/Removal	Walk Through Packages at Either Side of Stage Area Install/Strike/Storage of (2) Gift Package Entry Gate (includes bases)	1	22,666.69	22,666.69
	Lease - Installation/Removal	Walk Through Ornament Between Splash Pad and Convention Center Entrance Install/Strike/Storage of (1) 16' Walk Through Ornament (No Seating)	1	18,049.78	18,049.78
	Lease - Installation/Removal	Entrance of Park Install/Strike/Storage of (2) Custom Arch with Soldiers and Event Signage Above (Must Allow Truck Under for Events)	1	48,909.97	48,909.97
	Lease - Installation/Removal	Feature Tree in Green Area (1) New Drum Base for 50' Tree (No Entry)	1	29,183.54	29,183.54
	Lease - Installation/Removal	Feature Tree in Green Area Labor to Install (1) Customer Owned 50' Tree	1	15,444.00	15,444.00
	Lease - Installation/Removal	Feature Tree in Green Area Updated Ornamentation to Match Garland	1	23,016.83	23,016.83
	Lease - Installation/Removal	Interactive Area Install/Strike/Storage of (1) Tic Tac Toe Board	1	27,547.92	27,547.92

REMITTANCE ADDRESS:
14241 Commerce Dr
Garden Grove, CA 92843

Lease - Installation/Removal	Photo Op Area Install/Strike/Storage of (1) Train Photo Op	1	33,122.87	33,122.87
Lease - Installation/Removal	Photo Op Area Install/Strike/Storage of (1) Ornament Photo Op with Midland Logo Backdrop	1	8,099.54	8,099.54
Lease - Installation/Removal	Photo Op Area Install/Strike/Storage of (1) Happy Holidays Photo Frame	1	5,843.49	5,843.49
Lease - Installation/Removal	Photo Op Area Install/Strike/Storage of (1) 30' Gift Package Tree	1	50,681.84	50,681.84
Lease - Installation/Removal	Photo Op Area Install/Strike/Storage of (2) 3D Snowflake (base included)	1	16,507.29	16,507.29
Lease - Installation/Removal	Photo Op Area Install/Strike/Storage of (1) 3D Package (base included)	1	2,750.61	2,750.61
Lease - Installation/Removal	Monument Signs Install/Strike/Storage of (4) Angel's on Monument Sign	1	24,654.08	24,654.08
Lease - Installation/Removal	Tree Lighting of Focal Trees in (2) Park Install/Strike/Storage of (65) StarBurst Installed in Canopy of Tree	1	25,579.42	25,579.42
Product Purchase	Tree Lighting with Expandable Perm. Light Strands Per Document Attached (Price Includes Labor to Install)	1	104,730.75	104,730.75
Lease - Installation/Removal	Temporary Tree Lighting Per Document Attached	1	79,636.63	79,636.63

Payment Terms:
50% Deposit
25% Due at Completion of Installation
25% Prior to the Removal and Storage of Display
Pricing is a LEASE per year for (3) Years 2024-2026
Year 1 $610,722.51
Year 2 $505,991.76 (Perm. Tree Lighting Removed)
Year 3 $505,991.76

***Cancellation policy: If lease is cancelled prior to the completion of the 3 year term, a 25% Cancellation Fee will be charged on any remaining unbilled amount of contract total over three-year period.

SUBTOTAL	610,722.51
TAX	0.00
TOTAL	**$610,722.51**

Accepted By

Accepted Date

REMIT TO ADDRESS:
14241 Commerce Dr
Garden Grove, CA 92843

MIDLAND
Be the Energy!

OFFICE OF THE CITY MANAGER

Mayor
Lori Blong

At-Large
Robin Poole

At-Large
Eric Davidson

District 1
Scott Dufford

District 2
John Norman

District 3
Jack Ladd

District 4
Amy Stretcher-Burkes

City Manager
Tommy Gonzalez

To: Midland City Council
From: Chief of Staff, Taylor Novak
Date: September 16, 2024
Subject: Support for the Midland Holiday Lights Project Appropriation of Funds

Overview:
Mayor and Council, I am writing to express my strong support for the Midland Holiday Lights Project, an initiative designed to enhance the quality of life in our city, create a vibrant sense of place, and attract visitors from across the region. This project aims to bring a festive, family-friendly atmosphere to Midland during the holiday season, driving economic benefits for local businesses while showcasing our community's unique spirit.

Key Benefits:

1. **Boost to Quality of Life:**
   The Holiday Lights Project will offer residents a chance to enjoy a local, visually stunning, and joyful experience throughout the holiday season. By bringing the community together for a shared celebration, we aim to foster a deeper sense of belonging and pride in Midland.

2. **Tourism and Regional Attraction:**
   The event has the potential to attract visitors from surrounding areas, making Midland a holiday destination. Similar projects in other cities have proven to be strong regional draws, leading to increased foot traffic and visibility for local attractions, restaurants, and retailers. This can result in a positive ripple effect across multiple sectors.

3. **Economic Impact on Local Businesses:**
   With the influx of both residents and tourists, the project will directly benefit our local economy. Visitors attending the event are likely to shop at local stores, dine at restaurants, and stay at hotels, increasing sales and creating a boost during the critical holiday shopping season.

4. **Strengthening Midland's Brand:**
   By investing in projects like this, Midland will further establish itself as a forward-thinking, dynamic city that values both economic growth and community well-being. A successful event will contribute to building a long-term reputation for Midland as a premier destination for seasonal events and family-friendly attractions.

Conclusion:
The Midland Holiday Lights Project represents a tremendous opportunity for our city to enhance quality of life, stimulate economic growth, and put Midland on the map as a regional holiday destination. I urge the City Council to fully support this initiative, which will benefit both our residents and local businesses while contributing to the city's vibrant future.

Thank you for your consideration.

Sincerely,
Taylor Novak
Chief of Staff

300 N Loraine, Midland TX 79701 | 432-685-7200 | www.midlandtexas.gov

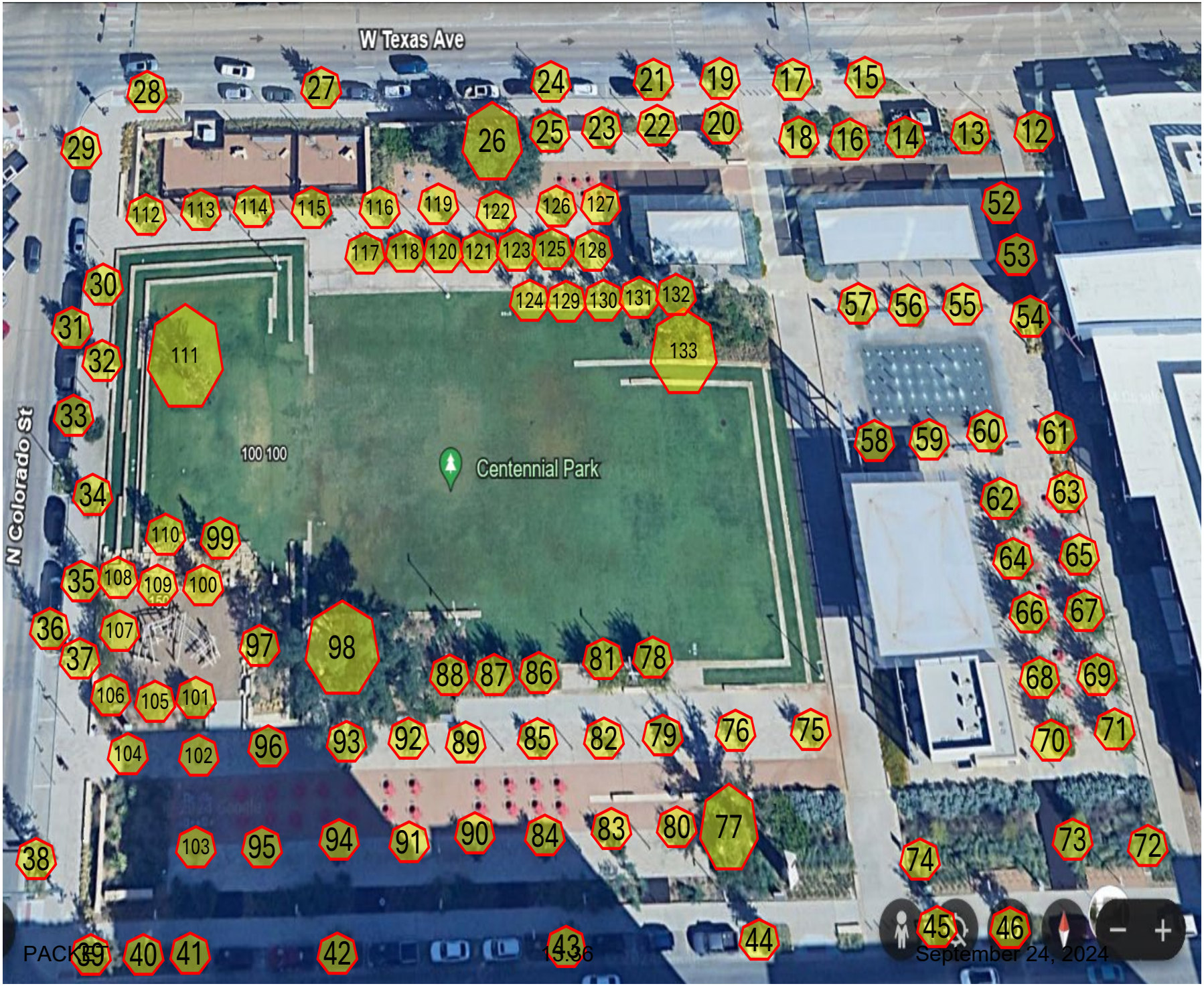
W Texas Ave
N Colorado St
Centennial Park
100 100
28 27 24 21 19 17 15
29 26 25 23 22 20 18 16 14 13 12
112 113 114 115 116 119 122 126 127 52
117 118 120 121 123 125 128 53
30 124 129 130 131 132 57 56 55 54
31 111 133
32
33
58 59 60 61
34 62 63
110 99 64 65
35 108 109 100
36 107 97 98 66 67
37 88 87 86 81 78 68 69
106 105 101
104 102 96 93 92 89 85 82 79 76 75 70 71
38 103 95 94 91 90 84 83 80 77 74 73 72
39 40 41 42 43 44 45 46


47
48
49
50
51
1
2
3
4
5
6
7
8
9
10
11
W Wall St
Bush Convention Center
109
N Main St

City Council Meeting

Item Number: 14

Meeting Date: September 24, 2024

To: City Council / City Manager

From: Justine Ruff, Director

Subject: **RESOLUTION AUTHORIZING THE EXECUTION OF A CONTRACT WITH JONES BROS. DIRT & PAVING CONTRACTORS, INC., IN THE AMOUNT OF $2,272,588.85 FOR THE RECONSTRUCT RUNWAY 16R BLAST PAD, REMOVE RUNWAY 34L CONCRETE BLAST PAD, AND ADD ASPHALT SHOULDERS TO RUNWAY 10 BLAST PAD PROJECT AT THE MIDLAND INTERNATIONAL AIR & SPACE PORT; AND APPROPRIATING AND TRANSFERRING FUNDS FOR SAID PROJECT (DISTRICT 4) (AIRPORTS) (TRANSPARENT & CONSISTENT COMMUNICATION)**

Purpose

Resolution authorizing the execution of a contract with Jones Bros. Dirt & Paving Contractors, Inc. in the amount of $2,272,588.85 for the MAF Blast Pad Improvement Project (#900413) at Midland International Air & Space Port, and appropriate necessary funds for said project.

Recommended City Council Action

Approve

Strategic Priority

(Transparent & Consistent Communication)

Fiscal Impact

FAA Share (90%) – Grant 71		$ 2,975,211.00
City/Airport Share (10%) – Grant 71		$ 330,579.00
City/Airport Contingency		$ 227,259.00
	Total	**$ 3,533,049.00**

Breakout of Costs

Construction Phase Airport Admin Costs (Audit, etc.)	$ 10,000.09
Construction Phase Engineering Fee	$ 258,850.00
FAA Reimbursable Agreement	$ 102,851.06
FAA Cable Design & Construction	$ 31,500.00
Construction Phase Admin/Resident Project Representative (RPR)	$ 490,000.00
Construction Phase Surveying and Testing	$ 100,000.00
Construction Phase Reimbursable Costs	$ 40,000.00
Construction Improvements Bid	$ 2,272,588.85
Construction Contingency	$ 227,259.00
Recommended Construction Total Phase Appropriation	**$ 2,533,049.00**

Appropriation Language

That the sum of $557,838.00 is hereby appropriated from the Airport Operating Fund (500) Unappropriated Fund Balance (35650) to the MAF Blast Pad Improvement Project (#900413).

The sum of $2,975,211 will be appropriated from the Airport Construction Fund Balance and transferred to the MAF Blast Pad Improvement Project (#900413).

Discussion

During the April 23, 2024, Council meeting, a Motion authorized the Advertisement for Bids for the Reconstruct Runway 16R Blast Pad, Remove Runway 34L Concrete Blast Pad and Add Asphalt Shoulders to Runway 10 Blast Pad Project (#900413) at Midland International Air & Space Port. One bid was received from Jones Bros Dirt & Paving Contractors, Inc of Odessa, Texas. This project will be funded by FAA Grant #71 at 90% FAA and 10% City/Airport Funds.

The existing asphalt blast pad for Runway 16R is over 35 years old, and the asphalt surface has large, random cracks that penetrate the base layer. The Airport has continued to seal the cracks, but their size and depth has now made sealing these cracks almost impossible. This project will reconstruct the blast pad full depth and include the required asphalt shoulders for the blast pad in accordance with the current advisory circular for Airport Design.

The concrete blast pad for Runway 34L that was utilized prior to the threshold being displaced is well over 40 years old, and the concrete is deteriorating and the sealant in the joints has either come out entirely or has become extremely compromised. The ability of the Airport to repair or maintain this concrete is no longer feasible. This blast pad is no longer necessary for Runway 34L since the threshold was displaced. The project will remove the concrete and seed the area to provide erosion control.

The blast pad for Runway 10 does not have paved shoulders. On a previous project the blast pad was reconstructed but only within the limits of the existing pavement. In accordance with the current Airport Design Advisory Circular, the blast pad is required to include paved shoulders. This project will add asphalt shoulders to the existing blast pad to match the width of Runway 10/28 along with its paved shoulders.

City Manager's Office

RESOLUTION NO._____

RESOLUTION AUTHORIZING THE EXECUTION OF A CONTRACT WITH JONES BROS. DIRT & PAVING CONTRACTORS, INC., IN THE AMOUNT OF $2,272,588.85 FOR THE RECONSTRUCT RUNWAY 16R BLAST PAD, REMOVE RUNWAY 34L CONCRETE BLAST PAD, AND ADD ASPHALT SHOULDERS TO RUNWAY 10 BLAST PAD PROJECT AT THE MIDLAND INTERNATIONAL AIR & SPACE PORT; AND APPROPRIATING AND TRANSFERRING FUNDS FOR SAID PROJECT

WHEREAS, the City Council approved the plans and specifications and authorized advertisement for bids for the Reconstruct Runway 16R Blast Pad, Remove Runway 34L Concrete Blast Pad, and Add Asphalt Shoulders to Runway 10 Blast Pad Project (900413) at the Midland International Air & Space Port; and

WHEREAS, the City received one (1) responsive bid, with said bid being submitted by Jones Bros. Dirt & Paving Contractors, Inc., for a total cost of $2,272,588.85 for said project; and

WHEREAS, the City Council finds the price proposed by Jones Bros. Dirt & Paving Contractors, Inc., for said project to be fair and reasonable; and

WHEREAS, the City Council finds it to be in the public interest to award a contract to Jones Bros. Dirt & Paving Contractors, Inc., for said project and to appropriate necessary funds;

NOW, THEREFORE, BE IT RESOLVED BY THE CITY COUNCIL OF THE CITY OF MIDLAND, TEXAS:

SECTION ONE. That the Mayor and the City Secretary are hereby authorized and directed to execute and attest, respectively, on behalf of the City of Midland, a contract with Jones Bros. Dirt & Paving Contractors, Inc., in the amount of $2,272,588.85 for the Reconstruct Runway 16R Blast Pad, Remove Runway 34L Concrete Blast Pad, and Add Asphalt Shoulders to Runway 10 Blast Pad Project (900413) at the Midland International Air & Space Port. Said contract shall be on file in the office of the City Secretary and referenced

by the date and number of this Resolution.

SECTION TWO. That the sum of $557,838.00 shall be appropriated from the Airport Operating Fund (500) Unappropriated Fund Balance (35650) to the MAF Blast Pad Improvement Project (900413), and the sum of $2,975,211.00 shall be appropriated from the Airport Construction Fund Balance and transferred to the MAF Blast Pad Improvement Project (900413).

SECTION THREE. That the City Comptroller is hereby authorized and directed to pay Jones Bros. Dirt & Paving Contractors, Inc., pursuant to the terms of said contract from funds available in the MAF Blast Pad Improvement Project (900413) upon receipt of proper invoices or statements approved by the City Manager or his designee.

On motion of Council member _____, seconded by Council member _____, the above and foregoing resolution was adopted by the City Council of the City of Midland at a regular meeting on the _____ day of _____, A.D., 2024, by the following vote:

Council members voting "AYE":

Council members voting "NAY":

_____
Lori Merritt Blong, Mayor

ATTEST:

_____
Marcia Bentley-German, City Secretary

RECOMMENDED AND APPROVED:

_____
Tommy Gonzalez, City Manager

APPROVED AS TO CONTENT
AND COMPLETENESS:

_____
Justine Ruff, Director of Airports

APPROVED AS TO FORM ONLY:

_____
John Ohnemiller, City Attorney

Parkhill

PROJECT MANUAL – ISSUE FOR BID

MIDLAND INTERNATIONAL AIR & SPACE PORT (MAF)

Runway Blast Pads Improvements

AIP 3-48-0150-069-2022

Midland, Texas

Midland International Air & Space Port

June | 2024

Parkhill Project #01623422

PACKET 14.7 September 24, 2024

Parkhill

PROJECT MANUAL – ISSUE FOR BID

MIDLAND INTERNATIONAL AIR & SPACE PORT (MAF)

Runway Blast Pads Improvements

AIP 3-48-0150-069-2022

Midland, Texas

Midland International Air & Space Port



June | 2024

Parkhill Project #01623422

PACKET 14.8 September 24, 2024

Parkhill

ADDENDUM NO. 01	
	TO: All Planholders
	FROM: Larry Bell, PE
	PROJECT NAME: MAF Runway Blast Pads Improvements
	PROJECT NO.: 01623422
	DATE: July 8, 2024

Attention all Prospective Proposers/Planholders: The following are modifications to referenced Drawings and Project Manual. This Addendum becomes a part of Contract Documents and modifies original Contract Documents dated June 17, 2024, as noted herein. This Addendum includes Summary, Prebid Meeting Minutes, and Sign-in Sheet.

I. CLARIFICATIONS AS NOTED:
   1. Prebid Meeting Minutes
   2. Prebid Meeting Sign-In Sheet

END OF ADDENDUM NO. 01



Respectfully submitted,

PARKHILL

By: _____

Bidder shall acknowledge receipt of this addendum below and on Bid Proposal. Attach entire addendum to Bid Proposal submission.

ACKNOWLEDGED:

Jones Bros Dirt & Paving Contractors Inc

Stacey Bryant

By: _____

Parkhill

PREBID MEETING MINUTES	
	PROJECT NAME: MAF Runway Blast Pads Improvements Project
	PARKHILL PROJECT NO.: 01623422
	DATE: Wednesday, July 2, 2024 **TIME:** 1:30 pm CST
	LOCATION: MAF Conference Room
	ATTACHMENTS: Sign-In Sheet

Meeting minutes noted in red.

I. ATTENDANCE (attached)

II. INTRODUCTIONS

A. OWNER (City of Midland)
9506 La Force Blvd, Midland Texas 79701
   i. Justine Ruff, Director of Airports
   jruff@midlandtexas.gov
   ii. Nicholas Krakovec, Deputy Director
   nkrakovec@midlandtexas.gov
   432.560.2200
   iii. Steve Hirst, Operations Supervisor
   shirst@midlandtexas.gov
   432.559.7008

B. ENGINEER (Parkhill)
1700 West Wall Street, Suite 100, Midland Texas 79701
   i. Danny Winchester, PE, Project Manager
   432.697.1447
   dwinchester@parkhill.com
   ii. Larry Bell, PE, Project Engineer
   432.697.1447
   lbell@parkhill.com
   iii. Larry Castleman, Assistant Engineer
   806.473.2200
   lcastleman@parkhill.com

III. SECTION A – ADVERTISEMENT FOR BIDS

A. BID OPENING DATE/TIME:
   i. Opening: 2 pm CST, Wednesday, July 17, 2024
   ii. Location: City Secretary's Office, City Hall
   iii. DBE Goal: 9.8%
   iv. Minimum Wage Rates as established by DOL

IV. SECTION IB – INSTRUCTIONS TO BIDDERS

A. BID REQUIREMENTS/PREPARATIONS
   i. Contractor's Proposal (incomplete Proposals subject to rejection)
      a. All pricing items must be completed.
      b. Bid must show a grand total of all bid items.
      c. Bid must have an original signature.
      d. Bid form shall not be changed or altered in any manner.
      e. Any addenda issued up to date of Bid Opening must be acknowledged on page C-5 of Bid Form.
   ii. Bid Security
      a. A 5% security will be submitted with bid, based on maximum amount of the bid.

b. Security must be in the form of a cashier's or certified check, bond, or combination of the two, provided it equals 5%.
c. Bonds must have original signature and attached power of attorney.
d. Securities including cashier's checks will not be returned until bid is fully let. This can take up to 90 days.

iii. Financial Statement
a. Include with Bid in a separate, sealed envelope.
b. TxDOT prequalification acceptable

V. EXPERIENCE RECORD (Complete form in its entirety.)

VI. EQUIPMENT SCHEDULE (Complete form in its entirety.)

VII. MAF BIDDER INFORMATION SHEET (Complete form in its entirety.)

VIII. DBE INFORMATION

A. DBE Form 1 Utilization and DBE Form 2 Letter of Intent to be completed and submitted with Proposal.
B. DBE Form 2 does not require DBE firm signature at time of Proposal. Successful Bidder/Offeror will be required to complete DBE Form 2 within five days of bid opening.

IX. FAA-REQUESTED CONTRACT PROVISIONS

A. Buy American Form
B. Certification of Tax Delinquency and Felony Convictions

X. ENGINEER'S OVERVIEW

A. PROJECT SUMMARY:
i. Time of Completion: 270 consecutive calendar days
a. RWY16R/34L phase = 150 days,
b. RWY 10 phase = 120 days.
ii. Scope:
a. Remove existing RWY 16R Blast Pad and repave it including paved shoulders.
b. At RWY 34L far south blast area, remove~~/replace~~ existing concrete pavement and replace with topsoil.
c. At RWY 10 blast area, Project will add paved shoulders.
d. RWY 10 paving work also includes rerouting FAA electrical direct-bury power wires existing under proposed north paved shoulder footprint. Wires serve FAA MALSR threshold light row. Place new replacement wires in conduit and new junction boxes outside new pavement. This work will involve FAA personnel observation and oversight of work, materials, and installation.

B. PROJECT PHASING: See Special Provisions SP-3, and Plan Sheets G008-010. Per SP-3, Project phasing is affected by seasonal use factors for each air carrier runway, plus only one air-carrier runway may be closed at a time.
i. Phase 1 will be verified during Preconstruction meeting when all timing factors are known; however, the likely scenario is that work on RWY 16R/34L will be Phase 1 to complete both blast pads on that runway beginning Fall 2024.
ii. Phase 2, work on RWY 10 blast area, will likely begin May 2025.

C. PLANS AND SPECIFICATIONS
i. All questions concerning documents will be directed to Engineer's office, addressed to Debbie German, via email at dagerman@parkhill.com. Do not address any questions to Owner during bid stage.

ii. Planholders must call or email Parkhill to register as a Bidder and guarantee accurate communication, including distribution of Addenda.

D. ADDENDA
   i. Address questions regarding any addenda issued to this point.
   ii. Deadline for submitting questions is close of business, July 11, 2024.
   iii. Addenda will be issued no later than July 15, 2024.
   iv. Items discussed in today's Prebid Meeting will be issued to all registered Planholders through an Addendum issued by Engineer.

XI. OTHER PERTINENT ITEMS

A. ENTRY/STAGING AREAS
   i. Staging areas inside and outside airfield secure area will be identified based on MAF coordination. Before starting each work area, Contractor shall coordinate with MAF to determine approved access regarding staging area, entrance gate, and work area.
   ii. Access gates used by Contractor to enter secure area will also depend upon active work area(s).
   iii. Contractor shall keep access routes clean.
   iv. Contractor will be responsible for controlling access of workers through designated access gate for active phase.

B. SAFETY/SECURITY
   i. Per SP-5 and CSPP, badging is required for supervisors. Process includes background check and security class. A badged contractor representative must always be at each work zone. Expect a 30-day lead time to obtain badges.
   ii. Airfield pavement closure barricades shall be per Detla A1/G010 and placed for each phase per plan sheets G008 and G009.
   iii. Barricading with lights per Special Provisions for aircraft safety. Note the $25/day fee for lights out (see SP-13).
   iv. Security measures may change during Project based on security levels imposed by FAA.
   v. Contractor shall coordinate preconstruction utility locates at each of the three work sites.

C. TESTING
   i. All material approval during submittals at cost of and by Contractor.
   ii. Passing material acceptance tests during construction of improvements for in-place material performed by third-party laboratory provided by Owner and at cost of Owner.
   iii. RPR by Nathan Morrow.
   iv. Failing material acceptance tests at Contractor cost.

D. LINES AND GRADES
   i. See SP-10 LINES AND GRADES. Engineer will provide Contractor horizontal control points and benchmark for vertical control at each of the three blast pad work areas.
   ii. Contractor will be responsible for all construction staking and laying out Work beyond noted items.

E. CONTRACTOR COORDINATION REQUIREMENTS
   i. Contractor shall note special coordination required regarding rerouting electrical power to certain FAA facilities on RWY 10. Local FAA representatives will oversee and accomplish preconstruction power shutdown of RWY 10 MALSR approach light system. Contractor and FAA shall coordinate power lock-out procedures for Project. Local FAA representatives will periodically be on site to observe Contractor's work for FAA compliance. Contractor's work will focus on rerouting specific circuit that powers RWY 10 FAA threshold bar lights. Contractor shall provide submittals for all items incorporated into the work for this FAA re-route. In

addition to Parkhill review, submittals may be reviewed by FAA representatives to verify compliance with plan product requirements. Plan sheets note certain testing requirements accomplished by Contractor and monitored by local FAA representatives at appropriate times during construction. Separate from work described herein, Plans note Contractor shall remove and preserve certain FAA threshold and approach lights to preserve these items during paving construction. Contractor shall cover light bases to prevent water intrusion. Contractor shall incorporate standard 811 utility locate provisions.

XII. QUESTIONS

A. What is the Engineer estimate?

i. **$1.3 million.**

B. How old is the material?

i. **RWY 34L concrete was built in 1940s.**
ii. **RWY 16R Blast Pad was built in the late 1970s.**
iii. **RWY 10 (tie to edges of this Project) was built in 2019.**

C. Is FAA underground line at RWY 10 deep enough to abandon?

i. **If line is deep enough, abandon in place to pave over it.**
ii. **If line is too shallow, Contractor will cut the line near new pavement edges and remove line from new pavement footprint.**

XIII. CLOSE OF MEETING

Parkhill

PREBID ATTENDANCE

PROJECT NAME: MAF Runway Blast Pads Improvements Project
PARKHILL PROJECT NO.: 01623422
DATE: Wednesday, July 2, 2024 **TIME:** 1:30 pm CST
LOCATION: MAF Conference Room

NAME	ORGANIZATION	PHONE	EMAIL
Larry Bell	Parkhill	4326971447	lbell@parkhill.com
Cody Chitty	Jones Bros	432 349 3603	c.chitty@jonesdp.com
George Wilbanks	Reece Albert Inc	432-520-4480	georgew@ReeceAlbertInc.com
Jesse Ramirez	Reece Albert, inc.	432-570-0481	jesser@reecealbertinc.com
Nathan Morrow	Parkhill	806-438-6847	nmorrow@parkhill.com
Nick Krakover	DOA/MAF	432-560-2200	nkrakover@midlandtexas.gov
Steve Hirst	DOA/MAF	432-559-7008	shirst@midlandTexas.gov
Justine Ruff	DOA/MAF	432-560-2200 x 3001	jruff@midlandtexas.gov
Danny Winchester	Parkhill	432-697-1447	dwinchester@parkhill.com

TABLE OF CONTENTS

ADVERTISEMENT FOR BIDS..... A
INSTRUCTIONS TO BIDDERS.....IB
BID BOND.....BB
PROPOSAL..... C
CONTRACT..... D
PERFORMANCE BOND .....E
PAYMENT BOND .....F
CERTIFICATE OF INSURANCE..... G
EXPERIENCE RECORD ..... H
EQUIPMENT SCHEDULE I

Contract Assurance
Prompt Payment
City of Midland Department of Airports - DBE Policy Statement
Bidder Information Sheet

SPECIAL PROVISIONS

Article	Title
SP-1	Scope of Work
SP-2	Contract Documents
SP-3	Time and Order of Completion
SP-4	Limitation of Operation
SP-5	Construction Activity
SP-6	Affidavit of Bills Paid
SP-7	Calendar Day
SP-8	Protection of Property
SP-9	Electric Power and Natural Gas
SP-10	Lines and Grades
SP-11	Water for Construction
SP-12	Material Tests
SP-13	Barricades, Signs, and Hazard Markings
SP-14	Prevention of Air and Water Pollution
SP-15	Public Convenience and Safety
SP-16	Final Cleaning
SP-17	Insurance
SP-18	Removal and Disposal of Structures, Utilities, and Obstructions
SP-19	Conformity with Plans and Allowable Deviations
SP-20	Removal of Defective and Unauthorized Work
SP-21	Disputed Claims for Extra Work
SP-22	Federal Participation
SP-23	Indemnification
SP-24	Contractor Responsibility for Work
SP-25	Correction of Faulty Work after Final Payment
SP-26	Texas State Sales Tax
SP-27	Separate Contracts
SP-28	Trench Safety
SP-29	Load Restrictions
SP-30	Notice to Proceed
SP-31	Payment for Materials on Hand

SP-32	Weighing and Measuring Equipment
SP-33	Progress Schedule
SP-34	Average Climatic Range
SP-35	Substantially Complete
SP-36	Submittals
SP-37	Geotechnical Information
SP-38	Sovereign Immunity
SP-39	Governing Law and Venue
SP-40	Third-Party Beneficiary
SP-41	Releases
SP-42	Independent Contractor
SP-43	Notice of Alleged Breach; Statutory Prerequisites
SP-44	Assignment
SP-45	Waiver of Attorney Fees
SP-46	Prompt Pay Act
SP-47	Payment
SP-48	Project Closeout
SP-49	Disclosure of Interested Parties
SP-50	Parkhill/RPR Authority and Duty
SP-51	Anti-Boycott Statutes
SP-52	Partial Payments

GENERAL CONDITIONS OF THE CONTRACT

Article	Title
GC-01.	Owner
GC-02.	Contractor
GC-03.	Architect/Engineer
GC-04.	Contract Documents
GC-05.	Subcontractor
GC-06.	Written Notice
GC-07.	Work
GC-08.	Deleted
GC-09.	Deleted
GC-10.	Layout of Work
GC-11.	Architect/Engineer Authority and Duty
GC-12.	Superintendence and Project Representation
GC-13.	Contractor Duty and Superintendence
GC-14.	Contractor Understanding
GC-15.	Character of Workers
GC-16.	Contractor Buildings
GC-17.	Sanitation
GC-18.	Shop Drawings
GC-19.	Preliminary Approval
GC-20.	Defects and Remedies
GC-21.	Changes and Alterations
GC-22.	Right of Architect/Engineer to Modify Methods and Equipment
GC-23.	Keeping Plans and Specifications Accessible
GC-24.	Ownership of Drawings
GC-25.	Adequacy of Design

GC-26.	Right of Entry
GC-27.	Collateral Contracts
GC-28.	Discrepancies and Omissions
GC-29.	Deleted
GC-30.	Protection Against Accident to Employees and the Public
GC-31.	Contractor Insurance
GC-32.	Time for Completion and Liquidated Damages
GC-33.	Price for Work
GC-34.	Bonds
GC-35.	Losses from Natural Causes
GC-36.	Protection of Adjoining Property
GC-37.	Protection Against Subcontractor, Laborer, Materialmen and Furnisher of Machinery, Equipment, and Supply Claims
GC-38.	Protection Against Royalties or Patented Invention
GC-39.	Laws and Ordinances
GC-40.	Assignment and Subletting
GC-41.	Time and Order of Completion
GC-42.	Extension of Time
GC-43.	Hindrances and Delays
GC-44.	Quantities and Measurements
GC-45.	Estimated Quantities
GC-46.	Partial Payments
GC-47.	Use of Completed Portions
GC-48.	Final Completion and Acceptance
GC-49.	Final Payment
GC-50.	Payment Withheld
GC-51.	Delayed Payments
GC-52.	Extra Work
GC-53.	Time of Filing Claims
GC-54.	Deleted
GC-55.	Abandonment by Contractor
GC-56.	Abandonment by Owner

FEDERAL CONTRACT PROVISIONS
Guidelines for Contract Provisions
Wage Rate Determinations

FAA AC 150/5370-10H

PART 1 – GENERAL CONTRACT PROVISIONS
Section 10 Definition of Terms
Section 20 Proposal Requirements and Conditions
Section 30 Award and Execution of Contract
Section 40 Scope of Work
Section 50 Control of Work

Section 60 Control of Materials
Section 70 Legal Regulations and Responsibility to Public
Section 80 Execution and Progress
Section 90 Measurement and Payment

PART 2 – GENERAL CONSTRUCTION ITEMS
Item C-100 Contractor Quality Control Program (CQCP)
Item C-102 Temporary Air and Water Pollution, Soil Erosion, and Siltation Control
Item C-105 Mobilization
Item C-110 Method of Estimating Percentage Material Within Specification Limits (PWL)

PART 3 – SITEWORK
Item P-101 Preparation/Removal of Existing Pavements
Item P-152 Excavation, Subgrade, and Embankment

PART 6 – FLEXIBLE PAVEMENT
Item P-401 Asphalt Mix Pavement
Item P-403 Asphalt Mix Pavement Base Course

PART 9– MISCELLANEOUS
Item P-602 Emulsified Asphalt Prime Coat
Item P-603 Emulsified Asphalt Tack Coat
Item P-610 Concrete for Miscellaneous Structures
Item P-620 Runway and Taxiway Marking

PART 12 – TURFING
Item T-901 Seeding
Item T-905 Topsoil

APPENDICES

APPENDIX A - GEOTECHNICAL REPORT
APPENDIX B - CONSTRUCTION SAFETY AND PHASING PLAN (CSPP)
APPENDIX C - CONSTRUCTION MANAGEMENT PLAN (CMP)

ADVERTISEMENT FOR BIDS
NOTICE TO BIDDERS

Sealed proposals addressed to the City Secretary will be received at the office of the City Secretary, City Hall, Midland, Texas until 2pm, Wednesday, July 17, 2024, for furnishing all necessary materials, machinery, equipment, superintendence, and labor for constructing certain improvements at Midland International Air & Space Port (MAF), Midland, Texas. These improvements are contained in Plans and Specifications entitled, "Midland International Air & Space Port, Runway Blast Pads Improvements," dated June 2024.

Immediately following the closing time for receipt of Bids/Proposals will be publicly opened and read aloud. Any Bid received after closing time will be returned unopened.

Principal items of Work are set forth in specific detail in the Proposal Section of these Specifications; however, Work items may be generally described as repaving and reconfiguring three runway blast pads areas.

Work will also include other miscellaneous materials, equipment, machinery, superintendence, and labor for constructing these improvements for MAF, Midland, Texas.

A Bid Proposal guaranty is to accompany the Bid, thereby guaranteeing the good faith of the Bidder and that Bidder will enter the written Contract. The guaranty is to amount to 5 percent of the total bid and must be in the form of cash or certified check, issued by a bank satisfactory to the City of Midland, or a bid bond.

Bidders are expected to inspect site of work and inform themselves regarding all local conditions.

In all areas of employment, women will be afforded equal opportunity for employment. Employment of women shall not diminish the standards or requirements for employment of minorities.

This Project is subject to Minority Business Enterprise Contract Provisions, Foreign Trade Restrictions, Federal Debarment and Suspension, Drug-free Workplace, and other requirements stated in the Instructions to Bidders and other Sections of Project Specifications and Contract Documents.

Policy. It is the policy of the Department of Transportation (DOT) that disadvantaged business enterprises as defined in 49 CFR Part 26 shall have maximum opportunity to participate in performance of contracts financed in whole or in part with Federal funds.

Buy American Provision. Proposed contract is subject to the Buy American Provision under Section 9129 of the Aviation Safety and Capacity Expansion Act of 1990. Details of such requirement are contained in Specifications.

MAF treats Bidder/Offer compliance with good faith effort requirements as a matter of responsiveness.

Requirements of 49 CFR Part 26, Regulations of the U.S. Department of Transportation, apply to this Contract. It is the policy of MAF to practice nondiscrimination based on race, color, sex, or national origin in award or performance of this Contract. All firms qualifying under this solicitation are encouraged to submit Bids/Proposals. Award of this Contract will be conditioned upon satisfying requirements of this Bid Specification. These requirements apply to all Bidders/Offerors, including those who qualify as a DBE. DBE contract goal of 9.8 percent has been established for this Contract. Bidder/Offeror shall make good faith efforts, as defined in Appendix A, 49 CFR Part 26, to meet contract goal for DBE participation in performance of this Contract.

Successful Bidder/Offeror will be required to submit the following information:

(1) names and addresses of DBE firms that will participate in Contract;
(2) description of Work each DBE firm will perform;
(3) dollar amount of participation of each DBE firm participating;
(4) written documentation of Bidder/Offeror commitment to use a DBE subcontractor whose participation submits to meet contract goal;
(5) written confirmation from DBE of participation in Contract as provided in commitment made under (4); and
(6) if contract goal is not met, evidence of good faith efforts.

Successful Bidder or Offeror must provide written confirmation of participation from each DBE firm the Bidder/Offeror lists in their commitment. Bidder/Offeror must submit DBE written confirmation of participation within five days of receiving Owner notice to successful Bidder.

Information for Bidders, Proposal forms, Specifications, and Plans are on file in the office of the Director of Airports, MAF.

Downloaded documents (PDF file extension format) can be obtained from the Parkhill Info Exchange web site after registering as a plan holder with Parkhill via https://parkhill.com/projects-for-bid/ or by contacting Debbie German, Project Coordinator, at dagerman@parkhill.com. No cost or deposit required for downloaded documents.

CITY OF MIDLAND, TEXAS
Marcia Bentley-German, City Secretary

INSTRUCTIONS TO BIDDERS

IB-1. BID FORMS

Bid shall be submitted on Proposal form in the bound Specifications.

In addition to the completed Proposals, bid forms shall include Bid Security, Financial Statement, and other specified documents. Failure to submit a complete Bid as specified will be considered as sufficient cause for rejection of the Bid.

IB-2. PREPARATION OF PROPOSALS

All blanks in the forms shall be filled in or marked "N.A." (Not Applicable) and all required information shall be included with Proposals. Bid prices shall be written in ink. Receipt of all addenda issued shall be acknowledged in the space provided on the addendum. Each addendum received and the Bid Security shall be enclosed with Proposal. Proposal and accompanying documents shall be enclosed in a sealed envelope, addressed to the City Secretary, 300 N. Loraine, Midland, Texas 79701, marked "MAF Runway Blast Pads" with name and address of Bidder also shown thereon. **If Sealed Bid is sent in a mailing envelope, outside of mailing envelope must also have same marking visible.**

IB-3. EXPERIENCE RECORD AND FINANCIAL STATEMENT

Experience Record included herein, shall be filled in, showing completed jobs, of a similar nature to the one covered by Proposal, and work in progress with contract and bond amounts and percent complete.

A sworn statement of the current financial condition of Bidder shall also be enclosed with Proposal, to provide Owner with information relative to the responsibility of bidders and their ability to finance and construct the work. This statement shall be enclosed with Proposal in a separate envelope and will be returned to Bidder upon return of his bid security.

TxDOT prequalification can be submitted in lieu of a financial statement with bids; however, financial information may be required of the apparent low Bidder.

IB-4. BID SECURITY

Each proposal must be accompanied by a Bid Bond, Certified Check, or cash in the amount of not less than 5 percent of the maximum bid submitted, payable without recourse to the City of Midland, Texas. If a Bid Bond is submitted as Bid Security, it shall be executed by an approved surety company authorized to do business in the State of Texas and accepted according to the latest list of companies holding certificates of authority from the Secretary of the Treasury of the United States of America. Such Bid Security shall be so conditioned if Bidder is awarded Contract and unable or fails to furnish Performance and Payment Bonds and execute Contract within 10 days after date of award, Security shall revert to Owner as compensation for damages which Owner suffers because of such failure by Bidder.

IB-5. PERFORMANCE AND PAYMENT BONDS

With execution and delivery of the Contract Documents, Contractor shall furnish, on the forms provided herein, bonds, as required by the General Conditions, of 100 percent of the total contract price, executed by an approved surety company authorized to do business in the State of Texas, and accepted according to the latest list of companies holding certificates of authority from the Secretary of the Treasury of the United States of America. Performance and Payment Bonds submitted shall be in compliance with Chapter 2253 of the Texas Government Code.

IB-6. INTERPRETATION OF BIDS

No bid will be considered which fails to supply all information indicated, or which has any limitation or provisions placed upon it by Bidder. In case of a difference between the written words and the figures in Proposal, amount stated in written words will be considered as bid price, without recourse on the part of Contractor. In case of ambiguity or lack of clearness in Proposal, Owner will adopt the most advantageous construction thereof or reject the bid. Owner reserves the right to accept or reject any or all bids, if it is deemed to be in the best interest of the public. Further, Owner reserves the right to reject any bids because of irregularity or to waive such irregularity if such action is in the public interest.

IB-7. DISPOSITION OF BIDS

Owner expects to make award of the Contracts as soon as possible after the opening of Bids, but specifically reserves the right to hold all Proposals for a period not to exceed 90 days, before making an award. No Proposal, having been opened, may be withdrawn prior to expiration of this 90-day period. Bid Security of all but the successful Bidder will be returned upon making an award.

Contract will be awarded to the responsible bidder submitting the lowest bid complying with the conditions of the Advertisement for Bidders and the Instructions to Bidders.

IB-8. EXAMINATION OF SITE, PLANS, AND SPECIFICATIONS

Before submitting Proposal, each Bidder shall have made a thorough examination of the Site of Work and of the Plans and Specifications and shall become informed as to the location and nature of the proposed construction, labor conditions and all other matters that may affect the cost and time of completion of the Work upon which he bids. Bidders shall make such investigations of the nature of the Project as deemed necessary and shall assume all responsibility for fully informing themselves of the character of materials which will be encountered. Submission of a Proposal shall be prima facie evidence that Bidder has made such an examination. Contact Steve Hirst, Airport Facilities Manager (432.560.2200), to schedule a site examination visit.

IB-9. PREBID CONFERENCE

A prebid conference will be held at 1:30 pm, Tuesday, July 2, 2024, in the Conference Room at Midland International Air & Space Port (MAF). At this time, all interested Bidders will be requested to appear and present any questions they may have pertaining to this Project. All Bidders are urged to attend prebid conference because they will be charged with notice of the matters discussed therein. Attendance to the prebid conference is NOT mandatory.

IB-10. INTERPRETATION OF SPECIFICATIONS PRIOR TO BIDDING

Any questions arising during the advertising period as to the meaning or intent of the Specifications will be answered by an addendum which will be sent to all who have placed a deposit and/or furnished Plans and Contract Documents issued by Parkhill. Engineer shall receive requests for clarifications to Specifications and Plans at least three days prior to the date for receipt of bids.

Receipt of each addendum shall be acknowledged by Bidder in the space provided and each Addendum shall be enclosed with Proposal when it is submitted. All Addenda shall become a part of these Contract Documents.

IB-11. AVAILABILITY OF PLANS

A. For Bidders

All parties with an interest in the type of Work included in the Project covered by these documents, shall be given a reasonable opportunity to examine the documents and prepare a Bid or sub-bid. Documents may be examined without charge as noted in the Notice to Bidders.

Downloadable documents (PDF file extension format) can be obtained from the PSC Info Exchange web site after registering as a Plan Holder with Parkhill via https://parkhill.com/projects-for-bid/ or through Debbie German, Project Coordinator, at dagerman@parkhill.com. No cost or deposit required for downloaded documents.

B. For Contractor

Contractor will be furnished five sets of Specifications and Plans for his use during construction. This shall include all Plans and Specifications furnished to material suppliers and subcontractors but does not include the executed contract copies. Plans and Specifications for use during construction will be furnished directly only to Contractor. Contractor shall then distribute copies of Plans and Specifications to suppliers, subcontractors, or others, as required for proper execution of the Work.

Should additional sets of documents be desired, they may be purchased, by Contractor only, at the following prices, exclusive of postage or freight charges:

Plans and Specifications are $150.00 per set.

IB-12. SPECIAL PROVISIONS

Attention of Bidders is directed to SPECIAL PROVISIONS included in these documents for requirements concerning scope of work, labor, insurance, and similar subjects.

IB-13. PLANT LOCATION AND STORAGE AREA

Contractors bidding on the Work included in this Contract who desire to locate a material storage area or other similar facility on the airport property may secure such site, buildings, or areas by direct negotiation with the Director of Airports, MAF, Midland, Texas. An area located adjacent to the Project area will be identified as available for use by Contractor for staging and material storage.

IB-14. WITHDRAWAL OF PROPOSALS

Any Bidder, upon his or his authorized representative's written request, will be given permission to withdraw his Proposal not later than the time set for opening thereof. At the time of opening of Proposals, when such Proposal is reached, it will be returned to him unread.

IB-15. DISQUALIFICATION OF BIDDERS

Any one or more of the following causes may be considered as sufficient for the disqualification of bidder and the rejection of his bid or bids:

More than one Proposal for the same work from an individual firm, partnership, or corporation under the same or different name.

Evidence of collusion among bidders. Participants in such collusion may not receive recognition as Bidders for any future work.

Unbalanced Proposals in which the prices for some items are out of proportion to the prices for other items.

Failure to submit a unit price for each item of work for which a bid price is required by Proposal.

Lack of competency as revealed by the financial statement submitted.

Lack of responsibility as shown by past work judged from workmanship and progress standpoints.

Uncompleted Work which, in the judgment of Owner, might hinder or prevent the prompt completion of additional Work if awarded.

For being in arrears on existing contracts, in litigation with Owner, or having defaulted on a previous contract.

IB-16. MATERIAL GUARANTY

Before any Contract is awarded, Bidder may be required to furnish a complete statement of origin, composition, or manufacture of any or all materials proposed to be used in the construction of the Work, together with samples, which may be subjected to the tests provided for in these specifications to determine their quality and fitness for the Work.

IB-17. DISADVANTAGED BUSINESS ENTERPRISE CONTRACT PROVISIONS

It is the policy of the Department of Transportation (DOT) that disadvantaged business enterprises as defined in 49 CFR Part 26 shall have the maximum opportunity to participate in the performance of contracts financed in whole or in part with Federal funds under this agreement. Consequently, Bidder will be required to conform to the DBE requirements of 49 CFR Part 26.

IB-18. WAIVER

BY SUBMITTING A BID, EACH BIDDER AGREES TO AND DOES HEREBY WAIVE ANY CLAIM BIDDER HAS OR MAY HAVE AGAINST THE CITY OF MIDLAND, TEXAS, AND CITY EMPLOYEES, AGENTS, AND OFFICERS ARISING OUT OF OR IN ANY WAY CONNECTED WITH THE FOLLOWING:

1. ADMINISTRATION, EVALUATION, OR RECOMMENDATION OF ANY BID;
2. WAIVER OR DELETION OF ANY REQUIREMENT UNDER BID DOCUMENTS OR CONTRACT DOCUMENTS;
3. ACCEPTANCE OR REJECTION OF ANY BIDS; AND
4. AWARD OF CONTRACT.

BY SUBMITTING A BID, BIDDER ACKNOWLEDGES AN UNDERSTANDING OF ALL BIDDING DOCUMENT TERMS AND CONSENTS TO BIDDING PROCESS AND THE POSSIBILITY OF A NEGATIVE ASSESSMENT. BY SUBMITTING A BID, BIDDER ACKNOWLEDGES AND AGREES THAT THERE WAS/IS NO DISPARITY OF BARGAINING POWER BETWEEN BIDDER AND THE CITY OF MIDLAND, TEXAS.

BIDDER AGREES THIS IS THE INTENTIONAL RELINQUISHMENT OF THE LISTED PRESENTLY EXISTING KNOWN RIGHTS.

IB-19. WAIVER OF ATTORNEY FEES

BY EXECUTING THIS CONTRACT, CONTRACTOR AGREES TO WAIVE AND DOES HEREBY KNOWINGLY, CONCLUSIVELY, VOLUNTARILY, AND INTENTIONALLY WAIVE ANY CLAIM IT HAS/MAY HAVE IN THE FUTURE AGAINST OWNER, REGARDING AWARD OF ATTORNEY FEES, WHICH ARE IN ANY WAY RELATED TO CONTRACT, OR CONSTRUCTION, INTERPRETATION OR BREACH OF CONTRACT. CONTRACTOR SPECIFICALLY AGREES IF CONTRACTOR BRINGS/COMMENCES ANY LEGAL ACTION OR PROCEEDING RELATED TO THIS CONTRACT, CONSTRUCTION, INTERPRETATION, VALIDITY, OR BREACH OF CONTRACT, INCLUDING BUT NOT LIMITED TO ANY ACTION PURSUANT TO PROVISIONS OF THE TEXAS UNIFORM DECLARATORY JUDGMENTS ACT (TEXAS CIVIL PRACTICE AND REMEDIES CODE SECTION 37.001, ET. SEQ., AS AMENDED), OR CHAPTER 271 OF THE TEXAS LOCAL GOVERNMENT CODE, CONTRACTOR AGREES TO ABANDON, WAIVE, AND RELINQUISH ANY AND ALL RIGHTS TO RECOVERY OF ATTORNEY FEES TO WHICH CONTRACTOR MIGHT OTHERWISE BE ENTITLED.

CONTRACTOR AGREES THIS IS VOLUNTARY AND INTENTIONAL RELINQUISHMENT AND ABANDONMENT OF A PRESENTLY EXISTING KNOWN RIGHT. CONTRACTOR ACKNOWLEDGES AN UNDERSTANDING OF ALL TERMS AND CONDITIONS OF CONTRACT. CONTRACTOR FURTHER ACKNOWLEDGES AND AGREES THAT WAS/IS NO DISPARITY OF BARGAINING POWER BETWEEN OWNER AND CONTRACTOR.

THIS SECTION SHALL NOT BE CONSTRUED OR INTERPRETED AS A WAIVER OF SOVEREIGN IMMUNITY.

CONTRACTOR AND OWNER ARE RELYING ON THEIR OWN JUDGMENT. EACH PARTY HAD THE OPPORTUNITY TO DISCUSS THIS CONTRACT WITH COMPETENT LEGAL COUNSEL PRIOR TO ITS EXECUTION.

BID BOND

THE STATE OF TEXAS)

SURETY'S NO. 71724

COUNTY OF MIDLAND)

KNOWN ALL MEN BY THESE PRESENTS, THAT Jones Bros. Dirt & Paving Contractors, Inc. (hereinafter called "Principal"), as Principal, and National Fire Insurance Company of Hartford (hereinafter called "Surety"), as Surety, are held and firmly bound unto the City of Midland, a home rule municipal corporation of Midland County (hereinafter called "Obligee"), in the amount of Five (5%) Percent of Bidder's Maximum Bid Price DOLLARS ($ 5%), for payment whereof said Principal and Surety bind themselves and their heirs, administrators, executors, successors and assigns, jointly and severally, firmly by these presents.

WHEREAS, Principal submitted a Bid or Proposal to enter a certain written contract with Obligee to perform all work associated with the MAF Runway Blast Pads Improvements project.

NOW, THEREFORE, THE CONDITION OF THIS OBLIGATION IS SUCH, if said Principal shall faithfully, enter such written Contract, then this obligation shall be void; otherwise to remain in full force and effect.

IT IS EXPRESSLY UNDERSTOOD AND AGREED if said Principal should withdraw its Bid any time after such Bid is opened and before official rejection of such Bid or, if successful in securing the award thereof, said Principal should fail to enter into the Contract and furnish satisfactory Performance Bond and Payment Bond, Obligee, in either of such events, shall be entitled and hereby given the right to collect this Bid Bond as liquidated damages.

PROVIDED further if any legal action be filed upon this Bond venue shall lie in Midland County, Texas.

IN WITNESS WHEREOF, the said Principal and Surety do sign and seal this instrument, this day 9th of July, 2024.

National Fire Insurance Company of Hartford
Surety

By _____
Linda K. Edwards, Attorney-in-Fact

Address 151 N. Franklin Street

Chicago, IL 60606

Jones Bros. Dirt & Paving Contractors, Inc.

By _____

Address 1401 S Grandview Ave

Odessa, TX 79761

APPROVED AS TO FORM:

_____
City Attorney

NOTE: Attach Power of Attorney

POWER OF ATTORNEY APPOINTING INDIVIDUAL ATTORNEY-IN-FACT

Know All Men By These Presents, That Continental Casualty Company, an Illinois insurance company, National Fire Insurance Company of Hartford, an Illinois insurance company, and American Casualty Company of Reading, Pennsylvania, a Pennsylvania insurance company (herein called "the CNA Companies"), are duly organized and existing insurance companies having their principal offices in the City of Chicago, and State of Illinois, and that they do by virtue of the signatures and seals herein affixed hereby make, constitute and appoint

Linda K Edwards, Steven B Siddons, Shirong Chen, Lorrie E Scott, Teresa Ayala, Individually

of Fort Worth, TX, their true and lawful Attorney(s)-in-Fact with full power and authority hereby conferred to sign, seal and execute for and on their behalf bonds, undertakings and other obligatory instruments of similar nature

- In Unlimited Amounts -

and to bind them thereby as fully and to the same extent as if such instruments were signed by a duly authorized officer of their insurance companies and all the acts of said Attorney, pursuant to the authority hereby given is hereby ratified and confirmed.

This Power of Attorney is made and executed pursuant to and by authority of the By-Law and Resolutions, printed on the reverse hereof, duly adopted, as indicated, by the Boards of Directors of the insurance companies.

In Witness Whereof, the CNA Companies have caused these presents to be signed by their Vice President and their corporate seals to be hereto affixed on this 15th day of July, 2022.

Continental Casualty Company
National Fire Insurance Company of Hartford
American Casualty Company of Reading, Pennsylvania

Paul T. Bruflat — Vice President

State of South Dakota, County of Minnehaha, ss:

On this 15th day of July, 2022, before me personally came Paul T. Bruflat to me known, who, being by me duly sworn, did depose and say: that he resides in the City of Sioux Falls, State of South Dakota; that he is a Vice President of Continental Casualty Company, an Illinois insurance company, National Fire Insurance Company of Hartford, an Illinois insurance company, and American Casualty Company of Reading, Pennsylvania, a Pennsylvania insurance company described in and which executed the above instrument; that he knows the seals of said insurance companies; that the seals affixed to the said instrument are such corporate seals; that they were so affixed pursuant to authority given by the Boards of Directors of said insurance companies and that he signed his name thereto pursuant to like authority, and acknowledges same to be the act and deed of said insurance companies.

J. MOHR NOTARY PUBLIC SOUTH DAKOTA

My Commission Expires June 23, 2027

J. Mohr — Notary Public

CERTIFICATE

I, D. Johnson, Assistant Secretary of Continental Casualty Company, an Illinois insurance company, National Fire Insurance Company of Hartford, an Illinois insurance company, and American Casualty Company of Reading, Pennsylvania, a Pennsylvania insurance company do hereby certify that the Power of Attorney herein above set forth is still in force, and further certify that the By-Law and Resolution of the Board of Directors of the insurance companies printed on the reverse hereof is still in force. In testimony whereof I have hereunto subscribed my name and affixed the seal of the said insurance companies this 9th day of July, 2024.

Continental Casualty Company
National Fire Insurance Company of Hartford
American Casualty Company of Reading, Pennsylvania

D. Johnson — Assistant Secretary

Form F6853-4/2012

Go to www.cnasurety.com > Owner / Obligee Services > Validate Bond Coverage, if you want to verify bond authenticity.

Texas Department of Transportation

125 EAST 11TH STREET | AUSTIN, TEXAS 78701-2483 | (512) 463-8588 | WWW.TXDOT.GOV

February 08, 2024

JONES BROS. DIRT & PAVING CONTRACTORS, INC.
1401 S GRANDVIEW AVE
ODESSA, TX. 79761

RE: TxDOT Vendor Number 01026

Dear Contractor:

Your Confidential Questionnaire is satisfactory and qualifies you to bid on Projects let by the Texas Department of Transportation (TxDOT) from the date of this letter through November 30, 2024.

Your bidding capacity has been set at $160,258,000.00. You may request and receive bidding proposals for projects on which the engineer's estimate does not exceed your bidding capacity less any uncompleted work currently under contract with TxDOT.

If we may be of further assistance, please contact our Pre-qualification Branch at 512/416-2584.

Sincerely,

Greg Williams

Greg Williams
Director, Letting Management Section
Construction Division

PROPOSAL

TO: The Mayor and City Council
City of Midland
Midland, Texas

Date: July 17, 2024

Gentlemen:

Pursuant to foregoing Notice to Bidders, undersigned Bidder hereby proposes to do all Work and furnish all necessary superintendence, labor, machinery, equipment, tools, and materials, and anything necessary to complete all work bid, as provided by attached Specifications and shown on Plans, and is bound to acceptance of this Proposal to execute Contract and Bonds per accompanying forms, performing and completing Work within time stated, and furnishing all required guarantees, for the following prices to-wit:

RUNWAY BLAST PADS IMPROVEMENTS

Item	Quantity Unit	Description of Item and Unit Prices	Total Amount
1	1 LS	Item C-100 Contractor Quality Control Plan (CQCP), complete, per lump sum: one hundred two thousand Dollars and zero Cents ($ 102,000.00)	$ 102,000.00
2	1 LS	Item C-102, Temporary Air and Water Pollution, Soil Erosion, and Siltation Control, complete, per lump sum: twenty two thousand five hundred Dollars and zero Cents ($ 22,500.00)	$ 22,500.00
3	1 LS	Item C-105, Mobilization, 10 percent, complete, per lump sum: two hundred one thousand one hundred Dollars and zero Cents ($ 201,100.00)	$ 201,100.00
4	1 LS	Barricading, Signage, and Traffic Control, complete, per lump sum: three hundred fifty two thousand Dollars and zero Cents ($ 352,000.00)	$ 352,000.00
5	3,690 SY	Item P-101-5.1a, Remove Existing Asphaltic Pavement, complete, per square yard: twenty four Dollars and zero Cents ($ 24.00)	$ 88,560.00

Item	Quantity Unit	Description of Item and Unit Prices	Total Amount
6	3,200 SY	Item P-101-5.1b, Remove Existing Concrete Pavement, complete, per square yard: thirty seven Dollars and Zero Cents ($ 37.00)	$ 118,400.00
7	1,800 CY	Item P-152-4.1, Embankment, complete, per cubic yard: Seventy Six Dollars and eighty five Cents ($ 76.85)	$ 138,330.00
8	1,315 TON	Item P-401-8.1, Asphalt Surface Course, 4-inch thickness, 3-inch max lifts, complete, per ton: two hundred eighty five Dollars and Zero Cents ($ 285.00)	$ 374,775.00
9	1,560 TON	Item P-403-8.1, Asphalt Base Course, 5 inch thickness, 3 inch max lifts, complete, per ton: two hundred eighty five Dollars and Zero Cents ($ 285.00)	$ 444,600.00
10	1,620 GAL	Item P-602-5.1, Emulsified Asphalt Prime Coat, complete, per gallon: Seven Dollars and fifty Cents ($ 7.50)	$ 12,150.00
11	3,320 GAL	Item P-603-5.1, Emulsified Asphalt Tack Coat, complete, per gallon: five Dollars and fifty Cents ($ 5.50)	$ 18260.00
12	1 LS	FAA MALSR, cable reroute, including all coordination, labor, materials, testing and appurtenances required to reroute new underground power line in conduit, complete, per lump sum: one hundred seventy nine thousand One hundred fifty seven Dollars and ~~Zero~~ Sixty Cents ($ 179,157.60)	$ 179,157.60

Item	Quantity Unit	Description of Item and Unit Prices	Total Amount
13	11,100 SF	Item P-620-5.2b, Marking, including reflective media per Specifications, complete, per square foot: two Dollars and eighty seven Cents ($ 2.87)	$ 31,857.00
14	2.9 AC	Item T-901-5.1, Seeding, complete, per acre: eleven thousand one hundred forty Dollars and sixty nine Cents ($ 11,140.69)	$ 32,308.00
15	9,700 SY	Item T-905-5.1, Topsoil, obtained from site of Runways 10 and 16R work areas, per square yard: nine Dollars and fifty Cents ($ 9.50)	$ 92,150.00
16	775 CY	Item T-905-5.2, Topsoil, obtained from Off Airport for filling Runway 34L work area, complete, per cubic yard: eighty three Dollars and fifteen Cents ($ 83.15)	$ 64,441.25
		TOTAL BASE BID	$ 2,272,538.85

Bidder shall be required to issue a resale certificate on such materials in lieu of paying sales tax on such materials at time of purchase. The City will provide successful Bidder with a sales tax exemption certificate for such materials.

Undersigned Bidder hereby confirms he has visited the Site of the Work and has carefully examined Plans, Specifications, and Contract Documents pertaining to Work covered by this Bid, and prices bid herein are based on minimum wage rates included in Specifications.

Bidder certifies, by submission of this Proposal or acceptance of this Contract, neither Bidder nor Bidder's principals are presently debarred, suspended, proposed for debarment, declared ineligible, or voluntary excluded from participation in this transaction by any Federal department or agency. Bidder further agrees by submitting this Proposal, Bidder will include this clause without modification in all lower tier transactions, solicitations, proposals, contracts, and subcontracts. Where Bidder or any lower tier participant is unable to certify to this statement, it shall attach an explanation to this proposal.

Contractor or subcontractor, by submission of offer/execution of a contract, certifies it:

a. is not owned or controlled by one or more citizens or nationals of a foreign country included in the list of countries that discriminate against U.S. firms published by the Office of the United States Trade Representative (USTR);
b. has not knowingly entered into any contract or subcontract for this Project with a contractor that is a citizen or national of a foreign country on said list or is owned or controlled directly or indirectly by one or more citizens or nationals of a foreign country on said list.
c. has not procured any product nor subcontracted for the supply of any product for use on the Project that is produced in a foreign country on said list.

Unless restrictions of this clause are waived by the Secretary of Transportation in accordance with 49 CFR 30.17, no contract shall be awarded to Contractor or subcontractor who is unable to certify to the above. If Contractor knowingly procures or subcontracts for supply of any product or service of a foreign country on said list for use on Project, the Federal Aviation Administration may direct, through the sponsor, cancellation of Contract at no cost to the Government.

Further, Contractor agrees if awarded a contract resulting from this solicitation, it will incorporate this provision for certification without modification in each contract and in all lower-tier subcontracts. Contractor may rely upon the certification of a prospective subcontractor unless it has knowledge that the certification is erroneous.

Contractor shall provide immediate written notice to sponsor if Contractor learns its certification or that of a subcontractor was erroneous when submitted or has become erroneous by reason of changed circumstances. Subcontractor agrees to provide immediate written notice to Contractor, if at any time it learns that its certification was erroneous by reason of changed circumstances.

This certification is a material representation of fact upon which reliance was placed when making the award. If later determined Contractor or subcontractor knowingly rendered an erroneous certification, the Federal Aviation Administration may direct, through the sponsor, cancellation of contract or subcontract for default at no cost to the Government.

Nothing contained in the foregoing shall be construed to require establishment of a system of records to render, in good faith, certification required by this provision. Knowledge and information of a contractor is not required to exceed that normally possessed by a prudent person in the ordinary course of business dealings.

This certification concerns a matter within the jurisdiction of an agency of the United States of America and making of a false, fictitious, or fraudulent certification may render maker subject to prosecution under Title 18, United States Code, Section 1001.

Bidder hereby agrees to commence work under this Contract within 10 days of a date specified in written “Notice to Proceed” and to complete work within the consecutive calendar day framework noted in Contract. Bidder further agrees to pay as liquidated damages, the sum of $ 1,000.00 for each consecutive calendar day beyond each phase of days allowed as hereinafter provided in Article 32 of the General Conditions.

Bidder acknowledges receipt of the following addendum: Addendum 1 7/8/2024

Enclosed with this Proposal is a Cashier's or Certified Check for _____

_____ Dollars ($_____)

or, a Proposal Bond in the sum of 5 percent of Greatest Amount Bid Dollars ($ 5 percent of Greatest Bid), which it is agreed shall be collected and retained by Owner as liquidated damages in the event the Proposal is accepted by Owner within 90 days after date advertised for the reception of bids and undersigned fails to execute Contract or required bonds with Owner, under conditions hereof, within 10 days after date said proposal is accepted; otherwise, said check or bond shall be returned to undersigned upon demand.

Jones Bros. Dirt & Paving Contractors Inc
Contractor

(Seal if Bidder is a Corporation)
NO Seal Corp

By _____

1401 S. Grandview Odessa Texas 79761
Address

NOTE: Complete all blanks in this and accompanying forms and include proper Bid Security.

CONTRACT

STATE OF TEXAS

COUNTY OF MIDLAND

THIS CONTRACT is made and entered into this 24th day of September 2024, by and between the **CITY OF MIDLAND, TEXAS**, a home rule municipal corporation ("***Owner***"), and **JONES BROS. DIRT & PAVING CONTRACTORS, INC**., ("***Contractor***").

WITNESS: That for and in consideration of payments and agreements hereinafter mentioned, to be made and performed by Owner, and under conditions expressed in the bond bearing even date herewith, Contractor hereby agrees to commence and complete construction of items of work included in this Project, described as repaving and reconfiguring three runway blast pads areas.

Work will also include other miscellaneous materials, equipment, machinery, superintendence, and labor for constructing improvements for Midland International Air & Space Port (MAF).

These improvements are shown on Plans and Specifications entitled "MAF Runway Blast Pads Improvements" dated June 2024. Plans and Specifications are hereby incorporated herein by reference for all legal purposes and shall apply to this Contract as if fully set forth herein.

This Contract shall include all extra work in connection therewith. All work performed hereunder shall be in accordance with those certain General Conditions and Special Provisions, attached hereto, and hereby incorporated herein by referenced for all legal purposes and shall apply to this Contract as if fully set forth herein. Contractor shall, at own proper cost and expense, furnish all materials, supplies, machinery, equipment, tools, superintendence, labor, insurance, and other accessories and services necessary to complete said construction, in accordance with conditions and prices stated in Proposal attached hereto, and in accordance with all General Conditions, Special Provisions, and Plans, which includes all maps, plats, blueprints, and other drawings and printed or written explanatory matter thereof, and Specifications therefor, as prepared by Parkhill ("***Architect/Engineer***"), each of which has been identified by endorsement of Contractor and Engineer thereon, together with Contractor's written Proposal, General Conditions, Special Provisions, Performance Bond, and Payment Bond hereto attached; all of which are made a part hereof and collectively evidence and constitute the entire agreement between the parties hereof.

Contractor hereby agrees to commence work under this Contract within 10 days of a date specified in written "Notice to Proceed" and to complete work under Base Bid identified on plans within 270 calendar days from Notice to Proceed.

Contractor further agrees to pay as liquidated damages the sum of $1,000 for each consecutive calendar day beyond days allowed as hereinafter provided in Article 32 of General Conditions.

Owner agrees to pay Contractor from current funds for performance of this Contract in accordance with Proposal submitted therefor, subject to additions and deductions, as provided in Specifications, and to make payments on account thereof as provided therein.

BY EXECUTING THIS CONTRACT, CONTRACTOR AGREES TO WAIVE AND DOES HEREBY WAIVE ANY CLAIM CONTRACTOR HAS/MAY HAVE AGAINST THE CITY OF MIDLAND, TEXAS, AND PARKHILL, REGARDING AWARD OF ATTORNEY FEES, WHICH ARE IN ANY WAY RELATED TO CONTRACT, OR CONSTRUCTION, INTERPRETATION OR BREACH OF CONTRACT. CONTRACTOR SPECIFICALLY AGREES IF CONTRACTOR BRINGS/COMMENCES ANY LEGAL ACTION OR PROCEEDING RELATED TO THIS CONTRACT, CONSTRUCTION, INTERPRETATION, VALIDITY, OR BREACH OF THIS CONTRACT, INCLUDING BUT NOT LIMITED TO ANY ACTION PURSUANT TO PROVISIONS OF THE TEXAS UNIFORM DECLARATORY JUDGMENTS ACT (TEXAS CIVIL PRACTICE AND REMEDIES CODE SECTION 37.001, *ET SEQ*., AS AMENDED), CONTRACTOR AGREES TO WAIVE AND RELINQUISH ANY AND ALL RIGHTS TO RECOVERY OF ATTORNEY FEES TO WHICH CONTRACTOR MIGHT OTHERWISE BE ENTITLED.

CONTRACTOR AGREES THIS IS INTENTIONAL RELINQUISHMENT OF A PRESENTLY EXISTING KNOWN RIGHT. CONTRACTOR ACKNOWLEDGES AN UNDERSTANDING OF ALL TERMS AND CONDITIONS OF THIS CONTRACT.

By execution of this Contract, Contractor hereby represents and warrants to the City of Midland, Texas, that Contractor has read and understood the Contract.

This Contract shall be governed by laws of the State of Texas. Venue of any suit, right, or cause of action arising under or in connection with this Contract shall lie exclusively in Midland County, Texas. All payments and performance under or connected to this Contract shall be deemed to have occurred exclusively in Midland County, Texas.

IN WITNESS WHEREOF, the parties to these presents have executed this Agreement in the year and day first above written.

OWNER:

CITY OF MIDLAND, TEXAS

By _____
Lori Blong, Mayor

ATTEST:

By _____
Marica Bentley-German, City Secretary

CONTRACTOR:

By_____
Signature

Name, Title: _____
Print

Complete Address:

_____

_____

STATE OF _____

COUNTY OF _____

Before me, _____, on this day, personally
Notary

appeared, _____ (Name of Signer), who

□ is known to me

□ proved to me on the oath of _____
Witness

□ proved to me through _____
Document Description

to be the person whose name is subscribed herein and acknowledged to me execution of the same for purposes and consideration herein expressed.

Given under my hand and seal of office this

_____ day of _____, A.D., _____.
Day Month Year

Notary Seal

_____
Signature of Notary Officer

PERFORMANCE BOND
SUBMITTED IN COMPLIANCE WITH CHAPTER 2253 OF THE TEXAS GOVERNMENT CODE

STATE OF TEXAS §

COUNTY OF MIDLAND §

KNOW ALL MEN BY THESE PRESENTS: That we, Jones Bros. Dirt & Paving Contractors, Inc. of the City Odessa, County of Ector, and State of Texas, as principal, and _____, hereinafter called "Surety," are held and firmly bound unto the City of Midland, Texas, a home rule municipal corporation of Midland County, Texas, (hereinafter called "City-Obligee"), in the penal sum of two-million, two-hundred seventy-two thousand, five-hundred eighty-eight DOLLARS and eighty-five CENTS, ($2,272,588.85) lawful money of the United States, well and truly to be paid to the City of Midland, Texas, for payment whereof said Principal and Surety bind themselves and their heirs, administrators, executors, successors, and assigns, jointly and severally, firmly by these presents.

WHEREAS, Principal has entered a certain written contract with the Owner-Obligee, dated the 24th day of September 2024, to the Runway Blast Pads Improvements for the Midland International Air & Space Port, Midland, Texas specifically including in the scope of this work and bond, additional maintenance guaranty provisions set forth in Contract conditions, which Contract is hereby referred to and made a part hereof as fully and to the same extent as if copied at length herein, as well as the Principal's primary obligation to perform according to Plans and Specifications.

NOW, THEREFORE, THE CONDITION OF THIS OBLIGATION IS SUCH, if said Principal shall faithfully perform work in accordance with Plans, Specifications, Instructions to Bidders, General and Special Conditions, and other Contract Documents, including any addendums thereto, then this obligation shall be void; otherwise, to remain in full force and effect.

PROVIDED further if any legal action be filed upon this Bond venue shall lie in Midland County, State of Texas.

PROVIDED further this Performance Bond is submitted in compliance with Chapter 2253 of the Texas Government Code.

Surety, for value received, stipulates and agrees no change, extension of time, alteration, or addition to terms of the Contract, or to the work performed thereunder, or Plans, Specifications or Drawings accompanying the same, or any assignment of the Contract as may be provided for in Instructions to Bidders, shall in any way affect its obligation on this Bond, and it does waive notice of any such change, extension of time, alteration, or addition to the terms of the Contract, assignment thereof, or to the Work to be performed thereunder.

IN WITNESS WHEREOF said Principal and Surety have signed and sealed this instrument, this ____ day of _____, 20___.

_____	_____
Contractor	Surety
By _____	By _____
	(Title)

NOTE: If signed by an officer of Surety Company, there must be on file a certified extract from by-laws showing this person has authority to sign such obligation. If signed by an Attorney in Fact, Owner must be furnished with a copy of Power of Attorney for their files.

PAYMENT BOND

SUBMITTED IN COMPLIANCE WITH CHAPTER 2253 OF THE TEXAS GOVERNMENT CODE

STATE OF TEXAS §

COUNTY OF MIDLAND §

KNOW ALL MEN BY THESE PRESENTS: That we, Jones Bros. Dirt & Paving Contractors, Inc. of the City Odessa, County of Ector, and State of Texas, as principal, and _____, hereinafter called "Surety," are held and firmly bound unto the City of Midland, Texas, a home rule municipal corporation of Midland County, Texas, (hereinafter called "City-Obligee"), in the penal sum of two-million, two-hundred seventy-two thousand, five-hundred eighty-eight DOLLARS and eighty-five CENTS, ($2,272,588.85) lawful money of the United States, well and truly to be paid to the City of Midland, for payment whereof said Principal and Surety bind themselves and their heirs, administrators, executors, successors, and assigns, jointly and severally, firmly by these presents.

WHEREAS, Principal has entered into a certain written contract with Owner-Obligee, dated the 24th day of September 2024, to the Runway Blast Pads Improvements for the Midland International Air & Space Port, Midland, Texas which contract is hereby referred to and made a part hereof as fully and to the same extent as if copied at length herein.

NOW, THEREFORE, the condition of this obligation is if said Principal shall pay all claimants supplying labor and material to him or a subcontractor in the prosecution of the Work provided for in said Contract, then this obligation shall be null and void; otherwise, to remain in full force and effect.

PROVIDED further if any legal action be filed upon this Bond venue shall lie in Midland County, State of Texas.

PROVIDE further this Payment Bond is submitted in compliance with Chapter 2253 of the Texas Government Code.

Surety, for value received, stipulates and agrees no change, extension of time, alteration, or addition to terms of this Contract, or to Work performed thereunder, or Plans, Specifications, or Drawings accompanying the same, or any assignment of Contract as may be provided in Instructions to Bidders, shall in any way affect its obligation on this Bond, and it does waive notice of any such change, extension of time, alteration, or addition to terms of the Contract, assignment thereof, or to work to be performed thereunder.

WITNESS our hands this the _____ day of _____, 20___.

_____	_____
Contractor	Surety
By_____	By _____
	(Title)

NOTE: If signed by an officer of Surety Company, there must be on file a certified extract from by-laws showing this person has authority to sign such obligation. If signed by an Attorney in Fact, Owner must be furnished with a copy of Power of Attorney for their files.

CERTIFICATE OF INSURANCE

TO: CITY OF MIDLAND
MIDLAND INTERNATIONAL AIR & SPACE PORT
MIDLAND, TEXAS

Date _____

Type of Project: Runway Blast Pads Improvements

_____
(Name of Insured)

SAMPLE ONLY
SUCCESSFUL CONTRACTOR SHALL PROVIDE CERTIFICATE OF INSURANCE FROM HIS INSURANCE

THIS IS TO CERTIFY THAT _____
is, at the date of this certificate, insured by this Company with respect to business operations hereinafter described, for types of Insurance and in accordance with provisions of standard policies used by this Company, and further hereinafter described. Exceptions to standard policy noted on reverse side hereof.

TYPE OF INSURANCE

Policy No	Effective	Expires	Limits of Liability
Workmen's Compensation		Public	
1 person	$_____	Liability	
1 accident	$_____	Continuing	
1 person	$_____	Liability	
1 accident	$		
Property Damage			
Builder's Risk			
Automobile			
Other			

Foregoing Policies (do) (do not) cover all sub-contractors.

Locations Covered:_____

Description of Operations Covered:_____

The noted policies either in the body thereof or by appropriate endorsement provide they may not be changed or cancelled by insurer in less than the legal time required after insured receives written notice of such change or cancellation, or, in case there is no legal requirement, in less than five days after insured receives such written notice.

SEND EIGHT COPIES OF THIS
CERTIFICATE TO OWNER

_____
(Name of Insurer)

By _____

Title _____

Phone _____

NOTE: Name CITY OF MIDLAND and PARKHILL as additional insureds on required insurance policies.

CERTIFICATE OF LIABILITY INSURANCE

DATE (MM/DD/YYYY): 4/30/2024

THIS CERTIFICATE IS ISSUED AS A MATTER OF INFORMATION ONLY AND CONFERS NO RIGHTS UPON THE CERTIFICATE HOLDER. THIS CERTIFICATE DOES NOT AFFIRMATIVELY OR NEGATIVELY AMEND, EXTEND OR ALTER THE COVERAGE AFFORDED BY THE POLICIES BELOW. THIS CERTIFICATE OF INSURANCE DOES NOT CONSTITUTE A CONTRACT BETWEEN THE ISSUING INSURER(S), AUTHORIZED REPRESENTATIVE OR PRODUCER, AND THE CERTIFICATE HOLDER.

IMPORTANT: If the certificate holder is an ADDITIONAL INSURED, the policy(ies) must have ADDITIONAL INSURED provisions or be endorsed. If SUBROGATION IS WAIVED, subject to the terms and conditions of the policy, certain policies may require an endorsement. A statement on this certificate does not confer rights to the certificate holder in lieu of such endorsement(s).

PRODUCER
Acrisure Texas Risk Advisors & Insurance Services, LLC
5057 Keller Springs Rd.
Suite 200
Addison TX 75001

CONTACT NAME: Tina Payne
PHONE (A/C, No, Ext): 817-737-4943 **FAX (A/C, No):**
E-MAIL ADDRESS: CMPayne@Acrisure.com

INSURER(S) AFFORDING COVERAGE	NAIC #
INSURER A : Starr Indemnity & Liability Company	38318
INSURER B : Great American Insurance Company	16691
INSURER C : Texas Mutual Insurance Company	22945
INSURER D :	
INSURER E :	
INSURER F :	

INSURED JONEBRO-01
Jones Bros. Dirt & Paving Contractors, Inc.
1401 South Grandview Ave
Odessa TX 79761-7144

COVERAGES **CERTIFICATE NUMBER:** 1831689759 **REVISION NUMBER:**

THIS IS TO CERTIFY THAT THE POLICIES OF INSURANCE LISTED BELOW HAVE BEEN ISSUED TO THE INSURED NAMED ABOVE FOR THE POLICY PERIOD INDICATED. NOTWITHSTANDING ANY REQUIREMENT, TERM OR CONDITION OF ANY CONTRACT OR OTHER DOCUMENT WITH RESPECT TO WHICH THIS CERTIFICATE MAY BE ISSUED OR MAY PERTAIN, THE INSURANCE AFFORDED BY THE POLICIES DESCRIBED HEREIN IS SUBJECT TO ALL THE TERMS, EXCLUSIONS AND CONDITIONS OF SUCH POLICIES. LIMITS SHOWN MAY HAVE BEEN REDUCED BY PAID CLAIMS.

INSR LTR	TYPE OF INSURANCE	ADDL INSD	SUBR WVD	POLICY NUMBER	POLICY EFF (MM/DD/YYYY)	POLICY EXP (MM/DD/YYYY)	LIMITS	
A	X COMMERCIAL GENERAL LIABILITY CLAIMS-MADE X OCCUR GEN'L AGGREGATE LIMIT APPLIES PER: POLICY X PRO-JECT LOC OTHER:			1000025606231	5/1/2024	5/1/2025	EACH OCCURRENCE DAMAGE TO RENTED PREMISES (Ea occurrence) MED EXP (Any one person) PERSONAL & ADV INJURY GENERAL AGGREGATE PRODUCTS - COMP/OP AGG	$ 1,000,000 $ 300,000 $ 5,000 $ 1,000,000 $ 2,000,000 $ 2,000,000
A	AUTOMOBILE LIABILITY X ANY AUTO OWNED AUTOS ONLY / SCHEDULED AUTOS X HIRED AUTOS ONLY / X NON-OWNED AUTOS ONLY X MCS-90			1000198569241	5/1/2024	5/1/2025	COMBINED SINGLE LIMIT (Ea accident) BODILY INJURY (Per person) BODILY INJURY (Per accident) PROPERTY DAMAGE (Per accident) PIP-Basic	$ 1,000,000 $ $ $ $ 2,500
B	X UMBRELLA LIAB / OCCUR EXCESS LIAB / CLAIMS-MADE DED X RETENTION $ 10,000			TUU0332703-15	5/1/2024	5/1/2025	EACH OCCURRENCE AGGREGATE	$ 10,000,000 $ 10,000,000
C	WORKERS COMPENSATION AND EMPLOYERS' LIABILITY ANYPROPRIETOR/PARTNER/EXECUTIVE OFFICER/MEMBER EXCLUDED? Y / N (Mandatory in NH) If yes, describe under DESCRIPTION OF OPERATIONS below	N / A		0001185649	5/1/2024	5/1/2025	X PER STATUTE / OTH-ER E.L. EACH ACCIDENT E.L. DISEASE - EA EMPLOYEE E.L. DISEASE - POLICY LIMIT	 $ 1,000,000 $ 1,000,000 $ 1,000,000

DESCRIPTION OF OPERATIONS / LOCATIONS / VEHICLES (ACORD 101, Additional Remarks Schedule, may be attached if more space is required)
The general liability and auto policies include blanket automatic additional insured endorsements that provide additional insured status to the certificate holder on a primary and non-contributory basis only when there is a written contract between the named insured and the certificate holder that requires such status. The general liability, auto & workers compensation policies include blanket automatic waiver of subrogation endorsements that provide this feature only when there is a written contract between the named insured and the certificate holder that requires it.
For Bidding Purposes Only

CERTIFICATE HOLDER
Sample

CANCELLATION
SHOULD ANY OF THE ABOVE DESCRIBED POLICIES BE CANCELLED BEFORE THE EXPIRATION DATE THEREOF, NOTICE WILL BE DELIVERED IN ACCORDANCE WITH THE POLICY PROVISIONS.

AUTHORIZED REPRESENTATIVE
Jimmy Irwin

© 1988-2015 ACORD CORPORATION. All rights reserved.

The ACORD name and logo are registered marks of ACORD

CERTIFICATE OF LIABILITY INSURANCE

DATE (MM/DD/YYYY): 4/10/2024

THIS CERTIFICATE IS ISSUED AS A MATTER OF INFORMATION ONLY AND CONFERS NO RIGHTS UPON THE CERTIFICATE HOLDER. THIS CERTIFICATE DOES NOT AFFIRMATIVELY OR NEGATIVELY AMEND, EXTEND OR ALTER THE COVERAGE AFFORDED BY THE POLICIES BELOW. THIS CERTIFICATE OF INSURANCE DOES NOT CONSTITUTE A CONTRACT BETWEEN THE ISSUING INSURER(S), AUTHORIZED REPRESENTATIVE OR PRODUCER, AND THE CERTIFICATE HOLDER.

IMPORTANT: If the certificate holder is an ADDITIONAL INSURED, the policy(ies) must have ADDITIONAL INSURED provisions or be endorsed. If SUBROGATION IS WAIVED, subject to the terms and conditions of the policy, certain policies may require an endorsement. A statement on this certificate does not confer rights to the certificate holder in lieu of such endorsement(s).

PRODUCER	CONTACT NAME: Tina Payne	
Frank Siddons Insurance Agency Fort Worth 5057 Keller Springs Rd. Suite 200 Addison TX 75001	PHONE (A/C, No, Ext): 817-737-4943	FAX (A/C, No): 8177374947
	E-MAIL ADDRESS:	

INSURED	INSURER(S) AFFORDING COVERAGE	NAIC #
Jones Bros. Dirt & Paving Contractors, Inc. 1401 South Grandview Ave Odessa TX 79761-7144 JONEBRO-01	INSURER A : Mt. Hawley Insurance Company	37974
	INSURER B :	
	INSURER C :	
	INSURER D :	
	INSURER E :	
	INSURER F :	

COVERAGES **CERTIFICATE NUMBER:** 2056259407 **REVISION NUMBER:**

THIS IS TO CERTIFY THAT THE POLICIES OF INSURANCE LISTED BELOW HAVE BEEN ISSUED TO THE INSURED NAMED ABOVE FOR THE POLICY PERIOD INDICATED. NOTWITHSTANDING ANY REQUIREMENT, TERM OR CONDITION OF ANY CONTRACT OR OTHER DOCUMENT WITH RESPECT TO WHICH THIS CERTIFICATE MAY BE ISSUED OR MAY PERTAIN, THE INSURANCE AFFORDED BY THE POLICIES DESCRIBED HEREIN IS SUBJECT TO ALL THE TERMS, EXCLUSIONS AND CONDITIONS OF SUCH POLICIES. LIMITS SHOWN MAY HAVE BEEN REDUCED BY PAID CLAIMS.

INSR LTR	TYPE OF INSURANCE	ADDL INSD	SUBR WVD	POLICY NUMBER	POLICY EFF (MM/DD/YYYY)	POLICY EXP (MM/DD/YYYY)	LIMITS	
	COMMERCIAL GENERAL LIABILITY						EACH OCCURRENCE	$
	☐ CLAIMS-MADE ☐ OCCUR						DAMAGE TO RENTED PREMISES (Ea occurrence)	$
							MED EXP (Any one person)	$
							PERSONAL & ADV INJURY	$
	GEN'L AGGREGATE LIMIT APPLIES PER:						GENERAL AGGREGATE	$
	☐ POLICY ☐ PRO-JECT ☐ LOC						PRODUCTS - COMP/OP AGG	$
	☐ OTHER:							$
	AUTOMOBILE LIABILITY						COMBINED SINGLE LIMIT (Ea accident)	$
	☐ ANY AUTO						BODILY INJURY (Per person)	$
	☐ OWNED AUTOS ONLY ☐ SCHEDULED AUTOS						BODILY INJURY (Per accident)	$
	☐ HIRED AUTOS ONLY ☐ NON-OWNED AUTOS ONLY						PROPERTY DAMAGE (Per accident)	$
								$
	☐ UMBRELLA LIAB ☐ OCCUR						EACH OCCURRENCE	$
	☐ EXCESS LIAB ☐ CLAIMS-MADE						AGGREGATE	$
	☐ DED ☐ RETENTION $							$
	WORKERS COMPENSATION AND EMPLOYERS' LIABILITY Y / N						☐ PER STATUTE ☐ OTH-ER	
	ANY PROPRIETOR/PARTNER/EXECUTIVE OFFICER/MEMBER EXCLUDED? ☐ N / A (Mandatory in NH)						E.L. EACH ACCIDENT	$
	If yes, describe under DESCRIPTION OF OPERATIONS below						E.L. DISEASE - EA EMPLOYEE	$
							E.L. DISEASE - POLICY LIMIT	$
A	Commercial Pollution Liability			EGL0011281	4/3/2023	12/4/2024	Per Occurrence Aggregate Deductible Per Claim	$2,000,000 $4,000,000 $25,000

DESCRIPTION OF OPERATIONS / LOCATIONS / VEHICLES (ACORD 101, Additional Remarks Schedule, may be attached if more space is required)

For Bidding Purposes Only

CERTIFICATE HOLDER

Sample

CANCELLATION

SHOULD ANY OF THE ABOVE DESCRIBED POLICIES BE CANCELLED BEFORE THE EXPIRATION DATE THEREOF, NOTICE WILL BE DELIVERED IN ACCORDANCE WITH THE POLICY PROVISIONS.

AUTHORIZED REPRESENTATIVE

Jimmy Irwin

© 1988-2015 ACORD CORPORATION. All rights reserved.

The ACORD name and logo are registered marks of ACORD

07/24 WORK COMPLETED OVER $500,000

CONTRACT AWARDED	CLASS OF WORK	COMPLETION DATE	COUNTY/ PROJECT	ENGINEER
$5,271,413	ROADWAY REHABILITATION	06/24	MIDLAND CO., SS 588	TX DOT ATTN: FRED HERRERA 5100 W. IH 20 MIDLAND, TEXAS 79702
$5,497,840	MOB, EXCAVATION, MILLING, HMAC, BASE, CONCRETE	06/24	FY2023 MILL & FILL	CITY OF MIDLAND PO BOX 1152 MIDLAND, TEXAS 79701
$15,591,974	RMV CONC, BASE, PRIME COAT, TOM C, TRAFFIC CONTROL, ELECTRICAL, CONC, STRIPING	06/24	WINKLER CO., FM 874	TX DOT FRED HERRERA 3901 E. HWY 80 ODESSA, TEXAS 79761
$18,363,377	RMV CONC, EXCAVATIN, FLEX BASE, SP MIX, TACK COAT, DRILL SHAFT, CONC RIPRAP, ELECTRICAL, STRIPING	04/2024	MIDLAND CO, SL 250	TX DOT ATTN: FRED HERRERA 5100 W. IH 20 MIDLAND, TEXAS 79702
$1,108,985	EXCAVATION, PRIME COAT, TY C, TY D, CONCRETE	12/23	ILLINOIS AVENUE MILL & INLAY	CITY OF MIDLAND PO BOX 1152 MIDLAND, TEXAS 79701
$60,322,907	ROADWAY REHABILITATION	12/23	REEVES FM 2119	TX DOT 1207 E. DICKINSON ATTN: BRYAN LUTZ FT. STOCKTON, TEXAS 79735
$1,852,182	HMAC, CONCRETE, STRIPING, SIGNS, TRAFFIC CONTROL	08/23	COTTONWOOD ROAD, PHASE II IMPROVEMENTS	ECTOR COUNTY 1010 E. 8TH STREET ODESSA, TEXAS 79761
$3,288,107	EXCAVATION, MILLING, PRIME COAT, TY D ASPHALT, CONCRETE	08/23	FY 2022 CITY OF MIDLAND	CITY OF MIDLAND PO BOX 1152 MIDLAND, TEXAS 79701
$5,443,364	VO COURSE SURFACE, BASE, CONC, STRIPING, PIPE S.E.T.'s, TRAFFIC CONTR	08/23	COTTONWOOD ROAD	ECTOR COUNTY 1010 E. 8TH STREET ODESSA, TEXAS 79761
$27,534,730	CONSTRUCT NEW INTERCHANGE	08/23	ECTOR CO US 385	TX DOT FRED HERRERA 3901 E. HWY 80 ODESSA, TEXAS 79761
$714,908	SUBGRADE, BASE, TY D MIX, CONCRETE	07/23	SHILOH ESTATES 4TH FILING	WYLY BROWN CONSTRUCTION P.O. BOX 1183 ODESSA, TEXAS 79760
$5,306,680	ILL, REWORK BASE, PRIME COAT, HMAC TY SP B, STRIPING, CONC, FOG SEAI	07/23	MOSS AVENUE MILL & OVERLAY	ECTOR COUNTY 1010 E. 8TH STREET ODESSA, TEXAS 79761
$5,103,078	PREP ROW, CONC, PIPELINE CAP, HMA, FLEX BASE, STRIPING, SIGNS	07/23	YUKON ROAD	MIDLAND CO. PURCHASING OFFICE P.O. BOX 421 MIDLAND, TEXAS 79702
$4,803,725	MILL & INLAY	05/23	MIDLAND CO., IH 20	TX DOT ATTN: FRED HERRERA 5100 W. IH 20 MIDLAND, TEXAS 79702
$25,175,545	CONSTRUCT NEW INTERCHANGE	02/23	MIDLAND CO SL 250	TX DOT ATTN: FRED HERRERA 5100 W. IH 20 MIDLAND, TEXAS 79702
$3,142,382	AL COAT, BASE, SUBGRADE, CONCRETE, STRIPING, MAIL BOXES, TRFC CNTF	01/23	APPLE STREET PAVING IMPROVEMENTS	ECTOR COUNTY 1010 E. 8TH STREET ODESSA, TEXAS 79761
$736,440	RMV EXSTG MIX, RMV C&G, BASE, TY D MIX, CONC, RIPRAP	01/23	LA ESTANCIA ESTATES	NEWTON ENGINEERING 3209 CALDERA BLVD MIDLAND, TEXAS 79705
$1,256,357	ROUGH CUT, SUBGRADE, BASE, HOT MIX, CONCRETE, STRIPING	12/22	YUKON ROAD PHASE III	WALKAMIN TRADING CO., INC. PO BOX 10649 MIDLAND, TEXAS 79702

07/24 **WORK COMPLETED OVER $500,000**

CONTRACT AWARDED	CLASS OF WORK	COMPLETION DATE	COUNTY/ PROJECT	ENGINEER
$5,112,952	IRRIGATION, MILLING, HMAC, FLEXBASE, CONCRETE, STRIPING, ELECTRICAL	11/22	THOMASON MILL & INLAY	CITY OF MIDLAND PO BOX 1152 MIDLAND, TEXAS 79701
$10,425,500	PREP ROW, GATES, CONC, BASE, HOT MIX, STRIPING	06/22	MIDLAND COUNTY CR 1232	MIDLAND CO. PURCHASING OFFICE P.O. BOX 421 MIDLAND, TEXAS 79702
$3,931,625	SAWCUT, EXCAVATION, SUBGRADE, PRIME COAT, HMA, CONC, STRIPING	06/22	MIDLAND COUNTY CLUSTER A ROADS	MIDLAND CO. PURCHASING OFFICE P.O. BOX 421 MIDLAND, TEXAS 79702
$4,287,754	TY D HOT MIX, TY C HOT MIX, CURB & GUTTER	04/22	TX NE WATER BP A PIPE	GARNEY COMPANIES, INC. 1700 SWIFT STREET NORTH KANSAS CITY, MO 64116
$28,170,563	MILL, INLAY, SUBGRADE WIDENING, SIGNS & PVMT MRKG	04/22	MIDLAND CO., SH 349	TX DOT ATTN: FRED HERRERA 5100 W. IH 20 MIDLAND, TEXAS 79702
$945,190	PVMT REPAIR EXCAV, GRADING, SEAL COAT, TXDOT TY D, FLEXIBLE STRCTR	01/22	STANTON AIRPORT	F & W ELECTRICAL CONTRACTORS, INC. PO BOX 98 FLORESVILLE, TEXAS 78114
$3,228,449	EXCAVATION, MILLING, PRIME COAT, HMAC, SAWCUT, CONCRETE	12/21	FY2021 MILL & INLAY	CITY OF MIDLAND PO BOX 1152 MIDLAND, TEXAS 79701
$809,768	SUBGRADE, BASE, TY D MIX, CONCRETE	12/21	SHILOH SQUARE	WYLY BROWN PO BOX 1183 ODESSA, TEXAS 79760
$2,623,863	EXCAVATION, SUBGRADE, PRIME, HMA PVMT, CONC, STRIPING, SIGNS	11/2021	MIDLAND CO CR 1150, PHASE 1	MIDLAND CO. PURCHASING OFFICE P.O. BOX 421 MIDLAND, TEXAS 79702
$603,331	MOB, EXCAVATION, MILLING, PRIME COAT, HMAC, CONCRETE	08/21	SINCLAIR MILL-INLAY	CITY OF MIDLAND PO BOX 1152 MIDLAND, TEXAS 79701
$1,420,956	MOB, EROSION CONTROL, TRAFFIC CONTROL, MILLING, HMAC, CONC, PRIME TACK COAT, STRIPING	08/21	ANETTA DR. MILL & INLAY	CITY OF MIDLAND PO BOX 1152 MIDLAND, TEXAS 79701
$2,878,473	SITE CLEARING, BASE, HMAC, RMV CONC	07/21	MAF VEHICLE PARKING IMPROVEMENTS	ONYX GENERAL CONTRACTORS, LLC. P.O. BOX 60547 MIDLAND, TEXAS 79711
$5,280,182	EXCAVATION, COLD MILLING, PRIME COAT, TY D MIX, CONC, STRIPING	03/21	FY2020 MILL & FILL	CITY OF MIDLAND PO BOX 1152 MIDLAND, TEXAS 79701
$7,737,688	ROADWAY REHABILITATION	03/21	MARTIN CO., BS 349	TX DOT ATTN: FRED HERRERA 5100 W. IH 20 MIDLAND, TEXAS 79702
$4,871,039	PREP ROW, SUBGRADE, PRIME COAT, HMAC, CONC, STRIPING	03/21	MIDLAND COUNTY CR 1210, PHASE 1	MIDLAND CO. PURCHASING OFFICE P.O. BOX 421 MIDLAND, TEXAS 79702
$18,412,853	EXCAVATION, FLEX BASE, ASPHALT, CONCRETE	01/21	REEVES CO., SH 302	TX DOT 1207 E. DICKINSON ATTN: BRYAN LUTZ FT. STOCKTON, TEXAS 79735
$3,894,443	PREP ROW, SUBGRADE, PRIME COAT, HMA, CONC, STRIPING	12/20	MIDLAND COUNTY CR 1210, PHASE 2	MIDLAND CO. PURCHASING OFFICE P.O. BOX 421 MIDLAND, TEXAS 79702
$4,351,471	MOB, CONC, PRIME COAT, HMAC, STRIPING	12/20	MICHIGAN, TEXAS & LOUISIANA AVE.	CITY OF MIDLAND PO BOX 1152 MIDLAND, TEXAS 79701

07/24 WORK COMPLETED OVER $500,000

CONTRACT AWARDED	CLASS OF WORK	COMPLETION DATE	COUNTY/ PROJECT	ENGINEER
$2,906,852	MOB, RMV ASPHLT PAV, CONC, HMAC, STRIPING	11/20	BLUEBIRD LANE	CITY OF MIDLAND PO BOX 1152 MIDLAND, TEXAS 79701
$3,875,925	MOB, BARRICADES, RMV ASPHT PVMT, HMAC, CONC, STRIPING	09/20	CARTER AVENUE	CITY OF MIDLAND PO BOX 1152 MIDLAND, TEXAS 79701
$469,002	PREP ROW, BASE, PRIME, HOT MIX, CONCRETE	08/20	PILOT AVENUE PAVING PROJECT	CITY OF MIDLAND PO BOX 1152 MIDLAND, TEXAS 79701
$5,202,544	MOB, EXCAVATION, MILLING, PRIME COAT, TY D, CONC	08/20	CITY OF MIDLAND, FY2019 MILL & INLAY	CITY OF MIDLAND PO BOX 1152 MIDLAND, TEXAS 79701
$1,304,645	MOBILIZATION, SUBGRADE, BASE, HOT MIX, CONCRETE, STRIPING	06/20	ROGERS FORD ENGINNERING PLANS	ROGERS FORD 4200 W. WALL STREET MIDLAND, TEXAS 79703
$8,208,749	EXCAVATION, TY C HOT MIX, TY D HOT MIX, RIPRAP, CONCRETE, PRIME COAT, STRIPING	06/20	CITY OF MIDLAND TRADEWINDS	CITY OF MIDLAND PO BOX 1152 MIDLAND, TEXAS 79701
$5,017,411	EXCAVATION, HMAC, TRFC CONTROL, STRIPING, CONCRETE	05/20	MIDLAND COUNTY CR 1200	MIDLAND CO. PURCHASING OFFICE P.O. BOX 421 MIDLAND, TEXAS 79702
$961,165	PREP ROW, SUBGRADE, PRIME COAT, HMA, CONC, STRIPING	04/20	MIDLAND COUNTY CR 1218	MIDLAND CO. PURCHASING OFFICE P.O. BOX 421 MIDLAND, TEXAS 79702
$10,302,237	BACKFILL, FLEX BASE, SUPERPAVE, ELECTRICAL, STRIPING	04/20	REEVES CO., FM 1450	TX DOT 1207 E. DICKINSON ATTN: BRYAN LUTZ FT. STOCKTON, TEXAS 79735
$16,151,748	FLEX BASE, SUPERPAVE, SIGNS, STRIPING	3/20	WINKLER CO., SH 18	TX DOT FRED HERRERA 3901 E. HWY 80 ODESSA, TEXAS 79761
$1,223,540	CLEAR & GRUB, BASE, HOT MIX, CONC, BARRICADES	2/20	ARROYO CLEARING	I.C.A. PROPERTIES 700 N. GRANT, SUITE 600 ODESSA, TEXAS 79761
$8,138,220	EXCAVATION, SUPERPAVE, CONC, ELECTRICAL, STRIPING	1/20	MIDLAND CO., BS 349C	TX DOT FRED HERRERA 3901 E. HWY 80 ODESSA, TEXAS 79761
$1,837,295	EXCAVATION, FLEX BASE, ASPHALT, SUPERPAVE	11/19	ECTOR CO., FM 3503	TX DOT FRED HERRERA 3901 E. HWY 80 ODESSA, TEXAS 79761
$6,778,381	FLEX BASE, EMULSION, HOT MIX, STRIPING	11/19	MIDLAND CO., FM 1787	TX DOT FRED HERRERA 3901 E. HWY 80 ODESSA, TEXAS 79761
$11,811,750	SUBGRADE, PRIME COAT, SUPERPAVE, CONCRETE, ELEC	11/19	ECTOR CO B I-20 E	TX DOT FRED HERRERA 3901 E. HWY 80 ODESSA, TEXAS 79761
$2,170,418	MILLING, EXCAVATION, BASE, TY D , CONC, TRAFFIC CNTRL	11/19	DOWNTOWN STREET REHABILITATION	CITY OF ODESSA 411 W. 8TH STREET ODESSA, TEXAS 79761
$1,953,487	SWPPP, SUBGRADE, EXCAVATION, BASE, TY D	10/19	PILOT TRAVEL CENTER 338 & KERMIT HWY	PILOT TRAVEL CENTERS, LLC P.O. BOX 10146 KNOXVILLE, TN 37939-0146
$505,900	MOB, SUBGRADE, HOT MIX, BASE, CONC, STRIPING	09/19	GREENWOOD MIDDLE SCHOOL ADDITIO	LEE LEWIS CONSTRUCTION,INC. 7810 ORLANDO AVE. LUBBOCK, TEXAS 79423

07/24

WORK COMPLETED OVER $500,000

CONTRACT AWARDED	CLASS OF WORK	COMPLETION DATE	COUNTY/ PROJECT	ENGINEER
$1,399,601	SW3P DEVICES, BUILDING PAD, EXCAVATION, BASE, HOT MIX	08/19	PILOT TRAVEL CENTERS 2019	PILOT TRAVEL CENTERS, LLC P.O. BOX 10146 KNOXVILLE, TN 37939-0146
$626,164	PRIME COAT, BASE, TY D HOT MIX, CONCRETE, STRIPING	08/19	MIDLAND COUNTY CR 1120	MIDLAND CO. PURCHASING OFFICE P.O. BOX 421 MIDLAND, TEXAS 79702
$2,971,268	SUBGRADE, BASE, FENCING, CONCRETE	05/19	INTERNAL ROADS- PREFERRED SANDS	PREFERRED SANDS OF MONAHANS, LLC ONE RADNOR CORPORATE CENTER 100 MATSONFORD ROAD, SUITE 101 RADNOR, PA 19087
$731,724	HMAC SURFACE	05/19	VISTA SANDS TERMINAL ROADWAY	WATCO COMPANIES 420 HANSEN ST. S TWIN FALLS, ID 83301
$4,820,246	EXCAVATION, BASE, TY D HOT MIX, CONCRETE	04/19	MIDLAND COUNTY CR 1160	MIDLAND CO. PURCHASING OFFICE P.O. BOX 421 MIDLAND, TEXAS 79702
$830,416	EXCAVATION, BASE, HMAC	04/19	VILLAGE AT MANOR PARK PHASE 1	BOLER EQUIPMENT 4611 SINCLAIR MIDLAND, TEXAS 79707
$701,840	BARRICADES, MILLING, SP B, SP D, SIGNS, STRIPING	03/19	SERVICE ROAD @ MONAHANS MINE	TURNKEY PROCESSING SERVICE 28369 DAVIS PARKWAY, SUITE 407 WARRENVILLE, IL 60555
$701,840	BARRICADES, MILLING, SP B, SP D, SIGNS, STRIPING	03/19	SERVICE ROAD @ MONAHANS MINE	TURNKEY PROCESSING SERVICE 28369 DAVIS PARKWAY, SUITE 407 WARRENVILLE, IL 60555
$6,925,992	EXCAVATION, PRIME COAT, ELECTRICAL, STRIPING	03/19	REAGAN CO., US 67	TX DOT ATTN: STUART WITHINGTON 2802 ARMSTRONG SAN ANGELO, TEXAS 76903
$1,530,726	SUBGRADE, BASE, CONCRETE, HOT MIX	03/19	ROLLING WINDS	LANDGRAF CRUTCHER & ASSOCIATES 521 N. TEXAS AVE. ODESSA, TEXAS 79761
$3,117,309	EXCV, EMBKMNT, BASE, P-401 HOT MIX, STRIPING	12/18	MAF INCURSION & REHAB APRON	PARKHILL, SMITH & COOPER 1700 W. WALL STREET, SUITE 100 MIDLAND, TEXAS 79701
$5,623,576	PRIME COAT, HMAC	11/18	EDWARDS RANCH SAND PLANT	TURNKEY PROCESSING SERVICE 28369 DAVIS PARKWAY, SUITE 407 WARRENVILLE, IL 60555
$1,799,871	SUBGRADE, BASE, MIX, CONCRETE	11/18	GROW ODESSA-OIDC	LANDGRAF CRUTCHER & ASSOCIATES 521 N. TEXAS AVE. ODESSA, TEXAS 79761
$1,300,163	MILLING, SUBGRADE, BASE, HMAC, CONCRETE	11/18	EAST HICKS & EAST TAYLOR	CITY OF MIDLAND PO BOX 1152 MIDLAND, TEXAS 79701
$1,148,848	HMAC, PRIME COAT, CONC, STRIPING	10/18	LAMESA AND LONGVIEW MILL & FILL	CITY OF MIDLAND PO BOX 1152 MIDLAND, TEXAS 79701
$987,860	ASPHALT, CURB & GUTTER, CONCRETE	8/18	MIDLAND INT'L AIR SPCPRT DEVELOPMENT	PARKHILL, SMITH & COOPER 1700 W. WALL STREET, SUITE 100 MIDLAND, TEXAS 79701
$11,490,947	REHABILITATION OF EXISTING ROAD	8/18	ANDREWS CO,SH 176	TX DOT ATTN: CIRO BAEZA 5100 W. IH 20 MIDLAND, TEXAS 79702
$2,034,501	BUILDING PAD, SUBGRADE, HOT MIX, BASE, STRIPING	8/18	PILOT FLYING J	PILOT TRAVEL CENTERS PO BOX 10146 KNOXVILLE, TN 37939-0146
$2,296,749	HMAC, CONCRETE, EROSION CONTROL	7/18	LOS PATIOS, SECTION 3	MIKE JACKSON 4910 N. MIDKIFF MIDLAND, TEXAS 79705

07/24

WORK COMPLETED OVER $500,000

CONTRACT AWARDED	CLASS OF WORK	COMPLETION DATE	COUNTY/ PROJECT	ENGINEER
$1,632,556	EXCAVATION, SUBGRADE, FLEX BASE, STRIPING	7/18	FM 1233, CRANE COUNTY	ZACHRY CORPORATION 527 LOGWOOD SAN ANTONIO, TEXAS 78221
$526,945	ROUGH GRADE, HMAC, CONC, STRIPING	7/18	MAF XCOR & ORBITAL OUTFITTERS	PARKHILL, SMITH & COOPER 1700 W. WALL STREET, SUITE 100 MIDLAND, TEXAS 79701
$1,179,450	EXCAVATION, HMAC, ROCK BASE, STRIPING, CONCRETE	7/18	CITY OF MIDLAND, FY 2017 MILL/INLAY	CITY OF MIDLAND PO BOX 1152 MIDLAND, TEXAS 79701
$879,067	SUBGRADE, CONC, PRIME, BASE, HMAC	6/18	GRANDRIDGE ESTATES, PHASE 2	PARKHILL, SMITH & COOPER 1700 W. WALL STREET, SUITE 100 MIDLAND, TEXAS 79701
$11,801,427	EXTEND ON/OFF RAMPS	6/18	MIDLAND CO., IH 20 1788 RAMPS	TX DOT ATTN: CIRO BAEZA 5100 W. IH 20 MIDLAND, TEXAS 79702
$6,917,372	CONC, RIPRAP, BARRICADES, ELECTRIAL, STRIPING	6/18	MIDLAND CO., SH 349	TX DOT ATTN: CIRO BAEZA 5100 W. IH 20 MIDLAND, TEXAS 79702
$1,680,441	EXCAV, BASE, PRE COAT, HMAC, CONC	6/18	GRASSLAND ESTATES, SECTION 10	WEST COMPANY OF MIDLAND 110 WEST LOUISIANA AVENUE, SUITE 110 MIDLAND, TEXAS 79701
$1,231,520	SUBGRADE, BASE, CONCRETE, STRIPING	6/18	FAIRMOUNT SANTROL	FAIRMOUNT SANTROL 4115 PROGRESS DRIVE OTTAWA, IL 61350
$6,136,374	SUGRADE, BASE, EMULSION, HOT MIX	5/18	VISTA SANDS - WINKLER CO.	CCC GROUP, INC 5797 DIETRICH ROAD SAN ANTONIO, TEXAS 78219
$13,715,024	CONC, PRIME COAT, SUPERPAVE, ELECTRICAL	5/18	WARD CO., IH 20	TX DOT FRED HERRERA 3901 E. HWY 80 ODESSA, TEXAS 79761
$3,726,951	EXCAV, SUBGRADE, BASE, HOTMIX, PRIME	4/18	CR 1230 & 140 IMPROVEMENTS	MIDLAND CO. PURCHASING OFFICE P.O. BOX 421 MIDLAND, TEXAS 79702
$725,746	BASE, CURB & GUTTER, STRIPING	4/18	BRIDGE- NEW WORSHIP CENTER	MIDTEX OF MIDLAND 5206 W. WADLEY MIDLAND, TEXAS 79701
$19,297,426	SEAL COAT, BASE, STRIPING	2/18	DAWSON CO., SH 349	TX DOT JAMES COMBES 800 W. WEBB STREET BROWNFIELD, TX 79376

07/24 **WORK IN PROGRESS OVER $500,000**

AMT. OF CONTRACT AWARDED	TYPE OF WORK	% COMPLETE	NAME & ADDRESS OF OWNER	BONDING CO.
$35,754,470	WIDEN ROAD ADD LANES AND SHOULDERS 21060503 PECOS US 67	71.00%	TX DOT 1207 E. DICKINSON ATTN: BRYAN LUTZ FT. STOCKTON, TEXAS 79735	Nat'l Fire Ins. Co. 5.00%
$46,043,243	BRIDGE REPLACEMENT & SUPER 2 22070503 REEVES CO., US 285	24.00%	TX DOT 1207 E. DICKINSON ATTN: BRYAN LUTZ FT. STOCKTON, TEXAS 79735	Nat'l Fire Ins. Co. 5.00%
$37,268,536	HIGHWAY IMPROVEMENT 22070504 WINKLER CO., SH 18	95.00%	TX DOT FRED HERRERA 3901 E. HWY 80 ODESSA, TEXAS 79761	Nat'l Fire Ins. Co. 5.00%
$31,527,013	PREP ROW, CONCRETE, ELECTRCAL, HMAC 22090504 FAUDREE ROAD PAVING IMPROVEMENTS	58.00%	CITY OF ODESSA 411 W. 8TH STREET ODESSA, TEXAS 79761	Nat'l Fire Ins. Co. 5.00%
$26,727,485	WIDEN ROAD- ADD LANES 22090505 UPTON CO., US 67	20.00%	TX DOT ATTN: FRED HERRERA 5100 W. IH 20 MIDLAND, TEXAS 79702	Nat'l Fire Ins. Co. 5.00%
$16,251,844	ROADWAY REHABILATION 22110503 MIDLAND CO., RM 1492	36.00%	TX DOT ATTN: FRED HERRERA 5100 W. IH 20 MIDLAND, TEXAS 79702	Nat'l Fire Ins. Co. 5.00%
$17,997,658	REHABILITATE EXISTING ROADWAY 22120503 MIDLAND CO., BS 349 C	45.00%	TX DOT ATTN: FRED HERRERA 5100 W. IH 20 MIDLAND, TEXAS 79702	Nat'l Fire Ins. Co. 5.00%
$2,758,651	 23120503 FAIRGROUNDS LOOP 350 MOCKINGBIRD	1.00%	CITY OF MIDLAND PO BOX 1152 MIDLAND, TEXAS 79701	Nat'l Fire Ins. Co. 5.00%
$5,995,947	ROAD REHABILITATION 23010504 UPTON CO., US 385	86.00%	TX DOT ATTN: FRED HERRERA 5100 W. IH 20 MIDLAND, TEXAS 79702	Nat'l Fire Ins. Co. 5.00%
$6,702,091	MOB, EROSION CNTRL, EXCAVATION, HMAC, BASE, PRIME, STRIPING, CONC 23020504 WADLEY AVENUE EXTENSION	50.00%	CITY OF MIDLAND PO BOX 1152 MIDLAND, TEXAS 79701	Nat'l Fire Ins. Co. 5.00%
$9,237,741	PREP ROW, SAWCUT, CONC PVMT, BASE, HMA, STRIPING, PRIME, CONCRETE 23040503 RECONST CR 1050 & ECR 110	84.00%	MIDLAND CO. PURCHASING OFFICE P.O. BOX 421 MIDLAND, TEXAS 79702	Nat'l Fire Ins. Co. 5.00%
$23,649,205	SUBGRADE, BASE, PRIME, CONC, STRIPING, FENCING TOM C 23060503 42ND STREET FROM FM 1936 TO KNOX AVENUE	67.00%	ECTOR COUNTY 1010 E. 8TH STREET ODESSA, TEXAS 79761	Nat'l Fire Ins. Co. 5.00%
$2,500,554	MOB, PVMT RMVL, EXCAVATION, BASE, EMULSION, ASPHALT, CONCRETE, ELECTRICAL 23100503 MAF TAXIWAY E RECONSTRUCTION	81.00%	PARKHILL, SMITH & COOPER 1700 W. WALL STREET, SUITE 100 MIDLAND, TEXAS 79701	Nat'l Fire Ins. Co. 5.00%
$8,628,119	MOB, EXCAVATION, MILLING, TY C MIX, TY D MIX, SAW CUT, MANHOLES, STRIPING 24010503 FY 2024 MILL & INLAY	37.00%	CITY OF MIDLAND PO BOX 1152 MIDLAND, TEXAS 79701	Nat'l Fire Ins. Co. 5.00%
$3,499,793	PREP ROW, SAWCUT, EARTHWORK, SUBGRADE, PRIME COAT, BASE, CONC WORK, STRIPING, SIGNS 24010504 RECONSTRUCTION CR 1040	52.00%	MIDLAND CO. PURCHASING OFFICE P.O. BOX 421 MIDLAND, TEXAS 79702	Nat'l Fire Ins. Co. 5.00%

$6,447,629	MOB, TRFC CNTRL, EXCAVATION, RMV/DSP CONC, BASE, HMAC, PRIME, CONC, STRIPI	1.00%	CITY OF MIDLAND PO BOX 1152 MIDLAND, TEXAS 79701	Nat'l Fire Ins. Co. 5.00%
	24070503 MAIN STREET PAVING BOND PROJECT			

07/24 **WORK IN PROGRESS OVER $500,000**

AMT. OF CONTRACT AWARDED	TYPE OF WORK	% COMPLETE	NAME & ADDRESS OF OWNER	BONDING CO.
$35,754,470	WIDEN ROAD ADD LANES AND SHOULDERS 21060503 PECOS US 67	71.00%	TX DOT 1207 E. DICKINSON ATTN: BRYAN LUTZ FT. STOCKTON, TEXAS 79735	Nat'l Fire Ins. Co. 5.00%
$46,043,243	BRIDGE REPLACEMENT & SUPER 2 22070503 REEVES CO., US 285	24.00%	TX DOT 1207 E. DICKINSON ATTN: BRYAN LUTZ FT. STOCKTON, TEXAS 79735	Nat'l Fire Ins. Co. 5.00%
$37,268,536	HIGHWAY IMPROVEMENT 22070504 WINKLER CO., SH 18	95.00%	TX DOT FRED HERRERA 3901 E. HWY 80 ODESSA, TEXAS 79761	Nat'l Fire Ins. Co. 5.00%
$31,527,013	PREP ROW, CONCRETE, ELECTRCAL, HMAC 22090504 FAUDREE ROAD PAVING IMPROVEMENTS	58.00%	CITY OF ODESSA 411 W. 8TH STREET ODESSA, TEXAS 79761	Nat'l Fire Ins. Co. 5.00%
$26,727,485	WIDEN ROAD- ADD LANES 22090505 UPTON CO., US 67	20.00%	TX DOT ATTN: FRED HERRERA 5100 W. IH 20 MIDLAND, TEXAS 79702	Nat'l Fire Ins. Co. 5.00%
$16,251,844	ROADWAY REHABILATION 22110503 MIDLAND CO., RM 1492	36.00%	TX DOT ATTN: FRED HERRERA 5100 W. IH 20 MIDLAND, TEXAS 79702	Nat'l Fire Ins. Co. 5.00%
$17,997,658	REHABILITATE EXISTING ROADWAY 22120503 MIDLAND CO., BS 349 C	45.00%	TX DOT ATTN: FRED HERRERA 5100 W. IH 20 MIDLAND, TEXAS 79702	Nat'l Fire Ins. Co. 5.00%
$2,758,651	 23120503 FAIRGROUNDS LOOP 350 MOCKINGBIRD	1.00%	CITY OF MIDLAND PO BOX 1152 MIDLAND, TEXAS 79701	Nat'l Fire Ins. Co. 5.00%
$5,995,947	ROAD REHABILITATION 23010504 UPTON CO., US 385	86.00%	TX DOT ATTN: FRED HERRERA 5100 W. IH 20 MIDLAND, TEXAS 79702	Nat'l Fire Ins. Co. 5.00%
$6,702,091	MOB, EROSION CNTRL, EXCAVATION, HMAC, BASE, PRIME, STRIPING, CONC 23020504 WADLEY AVENUE EXTENSION	50.00%	CITY OF MIDLAND PO BOX 1152 MIDLAND, TEXAS 79701	Nat'l Fire Ins. Co. 5.00%
$9,237,741	PREP ROW, SAWCUT, CONC PVMT, BASE, HMA, STRIPING, PRIME, CONCRETE 23040503 RECONST CR 1050 & ECR 110	84.00%	MIDLAND CO. PURCHASING OFFICE P.O. BOX 421 MIDLAND, TEXAS 79702	Nat'l Fire Ins. Co. 5.00%
$23,649,205	SUBGRADE, BASE, PRIME, CONC, STRIPING, FENCING TOM C 23060503 42ND STREET FROM FM 1936 TO KNOX AVENUE	67.00%	ECTOR COUNTY 1010 E. 8TH STREET ODESSA, TEXAS 79761	Nat'l Fire Ins. Co. 5.00%
$2,500,554	MOB, PVMT RMVL, EXCAVATION, BASE, EMULSION, ASPHALT, CONCRETE, ELECTRICAL 23100503 MAF TAXIWAY E RECONSTRUCTION	81.00%	PARKHILL, SMITH & COOPER 1700 W. WALL STREET, SUITE 100 MIDLAND, TEXAS 79701	Nat'l Fire Ins. Co. 5.00%
$8,628,119	MOB, EXCAVATION, MILLING, TY C MIX, TY D MIX, SAW CUT, MANHOLES, STRIPING 24010503 FY 2024 MILL & INLAY	37.00%	CITY OF MIDLAND PO BOX 1152 MIDLAND, TEXAS 79701	Nat'l Fire Ins. Co. 5.00%
$3,499,793	PREP ROW, SAWCUT, EARTHWORK, SUBGRADE, PRIME COAT, BASE, CONC WORK, STRIPING, SIGNS 24010504 RECONSTRUCTION CR 1040	52.00%	MIDLAND CO. PURCHASING OFFICE P.O. BOX 421 MIDLAND, TEXAS 79702	Nat'l Fire Ins. Co. 5.00%

$6,447,629	MOB, TRFC CNTRL, EXCAVATION, RMV/DSP CONC, BASE, HMAC, PRIME, CONC, STRIPI	1.00%	CITY OF MIDLAND PO BOX 1152 MIDLAND, TEXAS 79701	Nat'l Fire Ins. Co. 5.00%
	24070503 MAIN STREET PAVING BOND PROJECT			

List of Surety Bonds in force on uncompleted work: See attached

Amount of Contract Award	Amount of Bond	Name of Surety Company

Jones Bros Dirt & Paving Contractors Inc.
Bidder

Print Name: Stacey Bryant

1401 S. Grandview Odessa Texas 79761
Business Address

Unit #	Description #1	Description #2	Model	Make	Year Built
010-00	VACUUM TRUCK		LN 8000	FORD	1983
034-00	MESSAGE BOARD	S-A	KODIAK	CHEV	1995
038-00	TRUCK	S-A	4900 Navistar	INT'L	1992
041-00	TRUCK	S-A	KODIAK	CHEV	1991
047-00	TRUCK	S-A		CHEV	1998
048-00	TRUCK	S-A		CHEV	1999
049-00	TRUCK	S-A		FORD	2003
058-00	SERVICE TRUCK W/PTO		CH613	MACK	1994
064-00	HAUL TRUCK			PETERBILT	2003
064-17	HAUL TRUCK		389	PETERBILT	2018
067-00	TRUCK	T-A W/ WINCH		PETERBILT	1993
083-06	WATER TRUCK	Bruckners#81409	CHU613	MACK	2014
083-07	DUMP TRUCK	Bruckners#81410	CHU613	MACK	2014
083-10	WATER TRUCK	Bruckners#81413	CHU613	MACK	2014
083-24	TRUCK	Bruckners#821037	ANTHEM64	MACK	2021
083-26	TRUCK	Bruckners#821039	ANTHEM64	MACK	2021
083-27	TRUCK	Bruckners#821040	ANTHEM64	MACK	2021
083-28	TRUCK	Bruckners#821041	ANTHEM64	MACK	2021
084-00	TRUCK	T-A	CX613	MACK	2000
100-01	PICKUP		2500	GMC	2006
103-80	PICKUP	PILOT TRUCK	RANGER	FORD	2003
104-01	PICKUP	PILOT TRUCK	RANGER	FORD	2004
107-02	PICKUP	PILOT TRUCK	SIERRA 1500	GMC	2007
107-10	PICKUP	WELDING TRUCK	RAM 3500 HEAVYDU	DODGE	2007
108-10	PICKUP	PILOT TRUCK	RANGER	FORD	2008
111-01	PICKUP		F-150 EXT CAB	FORD	2011
111-03	PICKUP		F-150 EXT CAB	FORD	2011
111-04	PICKUP		F-150 CREW CAB	FORD	2011
111-05	PICKUP	CODY'S OLD COMPANY TRUCK	F-150 SUPERCREW E	FORD	2011
112-01	PICKUP		F-150 CREW CAB	FORD	2012
113-01	PICKUP		F-150 CREW CAB	FORD	2013
113-02	PICKUP		F-150 CREW CAB	FORD	2013
113-03	PICKUP		F-150 CREW CAB	FORD	2013
113-04	PICKUP		F-150 CREW CAB	FORD	2013
113-05	PICKUP		F-150 CREW CAB	FORD	2013
113-06	PICKUP		F-350 CREW CAB	FORD	2013
113-07	PICKUP		ECONOLINE WAGON	FORD	2013
114-30	VAN	11 PASSENGER	E-350 XLT	FORD	2014
114-31	VAN	11 PASSENGER	E-350 XLT	FORD	2014
114-70	CREW VAN	11 PASSENGER	E-350 XLT	FORD	2014
114-90	CREW VAN	11 PASSENGER	E-350 XLT	FORD	2014
115-01	PICKUP	DANNY VASQUEZ	F-250	FORD	2015
115-70	PICKUP	1 TON	F-350XL SUPER CREW	FORD	2015
115-71	PICKUP	1/2 TON	F-150XL SUPER CREW	FORD	2015
115-90	PICKUP	1 TON	F-350 XL SUPER CREV	FORD	2015
116-01	PICKUP	1/2 TON	F-150 XLT SUPER CRE	FORD	2016
116-02	PICKUP	1/2 TON	F-150 XLT SUPER CRE	FORD	2016
116-30	PICKUP	1/2 TON	F-150 XL SUPER CREV	FORD	2016
116-31	PICKUP	1/2 TON	F-150 XLT SUPER CRE	FORD	2016
116-32	PICKUP	1/2 TON	F-150 XLT SUPER CRE	FORD	2016
116-40	PICKUP	1/2 TON	F-150 XLT SUPER CRE	FORD	2016

116-71	PICKUP	1/2 TON	F-150 XLT SUPER CRE	FORD	2016
116-72	PICKUP	1/2 TON	F-150 XL SUPER CREV	FORD	2016
116-73	PICKUP	1/2 TON	F-150 XLT SUPER CRE	FORD	2016
116-90	PICKUP	1/2 TON	F-150 XL SUPER CREV	FORD	2016
116-93	PICKUP	1/2 TON	F-150 XL SUPER CREV	FORD	2016
117-10	PICKUP		F-150 XLT CREW CAB	FORD	2017
117-30	PICKUP		F-150 XL CREW CAB	FORD	2017
117-31	PICKUP		F-150 XLT CREW CAB	FORD	2017
117-32	PICKUP		F-150 XLT CREW CAB	FORD	2017
117-33	PICKUP		F-150 XL CREW CAB	FORD	2017
117-70	PICKUP		F-150 XL CREW CAB	FORD	2017
117-71	PICKUP		F-150 XL CREW CAB	FORD	2017
117-72	PICKUP	SUPERDUTY	F-350	FORD	2017
117-74	PICKUP		F-150 XL CREW CAB	FORD	2017
117-75	PICKUP	4X2 SUPERCREW	F-150	FORD	2017
117-76	VAN		TRANSIT 350	FORD	2017
117-77	PICKUP		F-150 XLT CREW CAB	FORD	2017
117-78	PICKUP		F-150 XLT CREW CAB	FORD	2017
117-79	PICKUP		F-150 XLT CREW CAB	FORD	2017
117-90	PICKUP		F-150 XL CREW CAB	FORD	2017
117-91	PICKUP		F-350 XL	FORD	2017
118-01	PICKUP	1/2 TON	F-150 XL CREW CAB	FORD	2018
118-02	PICKUP	1/2 TON	F-150 XL CREW CAB	FORD	2018
118-30	PICKUP	1/2 TON	F-150 XL CREW CAB	FORD	2018
118-31	PICKUP	1/2 TON	F-150 XL CREW CAB	FORD	2018
118-70	PICKUP	1/2 TON	F-150 XL CREW CAB	FORD	2018
118-71	PICKUP	1/2 TON	F-150 XL CREW CAB	FORD	2018
118-72	PICKUP	1/2 TON	F-150 XLT CREW CAB	FORD	2018
118-80	PICKUP	1/2 TON	F-150 XLT CREW CAB	FORD	2018
118-90	PICKUP	1 TON	F-350 XL CREW CAB	FORD	2018
118-91	PICKUP	1/2 TON	1500 SILVERADO	CHEVY	2018
118-92	PICKUP	1/2 TON 2 WHEEL DRIVE	F-150 CREW CAB	FORD	2018
118-93	PICKUP	1/2 TON	F-150 XL CREW CAB	FORD	2018
118-94	PICKUP	1/2 TON	F-150 XL CREW CAB	FORD	2018
119-30	VAN	15 PASSENGER	T-350	FORD	2019
119-31	VAN	15 PASSENGER	T350	FORD	2019
119-70	PICKUP	1 TON	F-350 XLT CREW CAB	FORD	2019
119-71	VAN	15 PASSENGER	T350	FORD	2019
119-90	PICKUP	1 TON	F-350 XL CREW CAB	FORD	2019
119-91	PICKUP	1 TON	F-350 XLT CREW CAB	FORD	2019
120-30	PICKUP		F-150 XLT CREW CAB	FORD	2020
120-31	PICKUP		F-150 XLT CREW CAB	FORD	2020
120-32	PICKUP		F-150 XLT CREW CAB	FORD	2020
120-33	PICKUP		F-150 XLT CREW CAB	FORD	2020
120-34	PICKUP		F-150 XLT CREW CAB	FORD	2020
120-35	PICKUP		F-150 XLT CREW CAB	FORD	2020
120-36	PICKUP		F-150 XLT CREW CAB	FORD	2020
120-70	PICKUP		F-150 XL CREW CAB	FORD	2020
120-71	PICKUP		F-350 XLT CREW CAB	FORD	2020
120-72	PICKUP		F-150 XLT CREW CAB	FORD	2020
120-73	PICKUP		F-150 XL CREW CAB	FORD	2020
120-90	PICKUP		F-150 XLT CREW CAB	FORD	2020

120-91	PICKUP	1 TON	F-350 XLT CREW CAB	FORD	2020
120-92	PICKUP	1 TON	F-350 XLT CREW CAB	FORD	2020
120-93	PICKUP		F-150 XLT CREW CAB	FORD	2020
121-00	PICKUP		F-150 CREW CAB	FORD	2013
121-10	PICKUP	LARIAT	F-150 XLT CREW CAB	FORD	2021
121-70	PICKUP		F-350	FORD	2021
122-30	PICKUP		F-150	FORD	2022
122-70	PICKUP		F-150 XL CREW CAB	FORD	2022
122-80	PICKUP		F-150	FORD	2022
123-10	PICKUP		F-350 CREW CAB	FORD	2023
123-30	PICKUP		F-150 XLT CREW CAB	FORD	2023
123-70	PICKUP		F-150	FORD	2023
133-00	PICKUP	2007/1 TON	F 150	FORD	2007
140-00	PICKUP	(QUAD CAB)	F 250 3/4 TON	FORD	2000
144-00	PICKUP	2009/QUADCAB	1500 1/2 TON	CHEV	2009
146-00	PICKUP		F 350 CREW CAB	FORD	2002
168-00	PICKUP	(CREW CAB)	F 150 1/2 TON	FORD	2003
172-00	PICKUP		RANGER	FORD	2007
176-00	PICKUP	(1/2 TON)	SILVERADO	CHEV	2007
180-00	PICKUP		1/2 TON (4 DR)	CHEVY	2006
185-00	ATTENUATOR	S-A 5TH WHEEL	KODIAK	CHEV	1996
192-00	MECHANIC TRUCK		C6500	CHEV	2006
193-01	PICKUP		F250	FORD	2011
194-01	WELDING TRUCK		1 TON	DODGE	2007
195-01	MECHANICS TRUCK		FB	FREIGHTLINER	2003
199-00	PICKUP		F-150	FORD	2011
200-01	VAN	ECNOLINE	VAN	FORD	2013
209-00	PICKUP		F-150 XLT CREW CAB	FORD	2011
209-10	DUMP TRUCK		CXU613	MACK	2009
211-00	DISTRIBUTOR		1998/FORD/TN	FORD	1998
211-10	DUMP TRUCK		CXU613	MACK	2011
211-30	WATER TRUCK		268A	HINO	2011
211-31	SERVICE TRUCK		268A	HINO	2011
212-00	PICKUP		F-150 XLT CREW CAB	FORD	2011
212-01	S/A BOBTAIL	BRUCKNER # 61218R	268	HINO	2012
212-10	MECHANIC TRUCK	BRUCKNERS # 61230	268A	HINO	2012
212-30	S/A BOBTAIL	BRUCKNER # 61216R	268	HINO	2012
212-31	SERVICE TRUCK	BRUCKNER # 61217R	268	HINO	2012
212-32	S/A BOBTAIL	BRUCKNER # 61215R	268	HINO	2012
212-33	S/A BOBTAIL	BRUCKNER # 61219R	268	HINO	2012
212-35	WATER TRUCK	BRUCKNERS#61226	268A	HINO	2012
212-36	SERVICE TRUCK	BRUCKNERS#61202	268A	HINO	2012
212-40	WATER TRUCK	BRUCKNERS# 61313R	268	HINO	2012
212-71	WATER TRUCK 2000 GAL	BRUCKNERS# 61228	268A	HINO	2012
212-72	SERVICE TRUCK	BRUCKNERS#61203	268A	HINO	2012
212-90	SERVICE TRUCK	BRUCKNERS# 61229	268A	HINO	2012
213-10	DUMP TRUCK		CXU613	MACK	2013
215-00	PICKUP		F-150 XLT CREW CAB	FORD	2011
216-00	DISTRIBUTOR		KODIAK	CHEV	1999
216-70	DISTRIBUTOR	2000 GAL	M2106	FREIGHTLINER	2016
216-90	WATER TRUCK	4000 GAL	WT4000	PETERBILT	2016
216-91	WATER TRUCK	4000 GAL	WT4000	PETERBILT	2016

216-92	WATER TRUCK	4000 GAL	WT4000	PETERBILT	2016
217-00	DISTRIBUTOR		DISTRIBUTOR	STERLING	1999
217-71	DISTRIBUTOR	BRUCKNER # 81753	GU433	MACK	2017
217-72	DISTRIBUTOR	BRUCKNER # 81754	GU433	MACK	2017
217-73	MECHANIC TRUCK	BRUCKNERS#61714	268A	HINO	2017
219-00	ATTENUATOR		1500 GALLONS	INT'L	1998
219-01	WATER TRUCK	F750	11,300 GALLON	FORD	2011
219-02	WATER TRUCK	F750	11,400 GALLONS	FORD	2011
219-03	WATER TRUCK	F750	11,300 GALLON	FORD	2012
219-70	DISTRIBUTOR		M2106	FREIGHTLINER	2019
219-91	SERVICE TRUCK		3500	CHEV	2019
220-00	WATER TRUCK		4000 GALLONS	FORD	1996
220-02	WATER TRUCK	BRUCKNERS#820058 (4000 GAL)	GU713	MACK	2020
220-03	WATER TRUCK	BRUCKNERS#820059 (4000 GAL)	GU713	MACK	2020
220-10	DUMP TRUCK	BRUCKNERS#821017	PINNACLE	MACK	2020
220-11	DUMP TRUCK	BRUCKNERS#821018	PINNACLE	MACK	2020
220-12	DUMP TRUCK	BRUCKNERS#821019	PINNACLE	MACK	2020
221-00	PICKUP		F-150 XLT CREW CAB	FORD	2011
221-70	WATER TRUCK 2000 GAL	BRUCKNER'S#62101	MD6	MACK	2021
222-00	WATER TRUCK		1500 GALLONS	CHEV	2000
222-01	WATER TRUCK 4000GL	BRUCKNER'S#815128	GU713	MACK	2015
222-10	MECHANIC TRUCK	BRUCKNERS#62205	MD6	MACK	2022
222-11	LUBE TRUCK	BRUCKNERS#62207	MD6	MACK	2022
222-70	DISTRIBUTOR		M2106	FREIGHTLINER	2022
222-91	END DUMP		730	CAT	2022
222-92	END DUMP		730	CAT	2022
223-00	WATER	(PTO PUMP)	4900	INT'L	1992
223-70	DISTRIBUTOR	BRUCKNERS # 62341	MD7	MACK	2024
224-10	SERVICE TRUCK	BRUCKNERS#62437	MD6	MACK	2024
224-11	SERVICE TRUCK	BRUCKNERS#62438	MD6	MACK	2024
224-20	TRUCK	BRUCKNERS#824110	AN64T	MACK	2024
224-21	TRUCK	BRUCKNERS#824111	AN64T	MACK	2024
224-22	TRUCK	BRUCKNERS#824112	AN64T	MACK	2024
224-23	TRUCK	BRUCKNERS#824113	AN64T	MACK	2024
224-24	TRUCK	BRUCKNERS#824114	AN64T	MACK	2024
225-00	WATER TRUCK		KODIAK	CHEV	1992
226-00	WATER TRUCK		KODIAK	CHEV	1992
227-00	WATER TRUCK	2000 GAL TANK	KODIAK	CHEV	1998
228-00	DUMP TRUCK		6 YARD	CHEV	1998
254-00	DUMP TRUCK	T-A	CX613 15 YD TRK	MACK	2001
256-00	DUMP TRUCK		CX613 15 YD TRK	MACK	2001
257-00	DUMP TRUCK	T-A	CX613 15 YD TRK	MACK	2001
260-00	DUMP TRUCK	T-A	CX613 15 YD TRK	MACK	2002
263-00	SERVICE TRUCK		4200 4x2	INT'L	2000
264-00	SERVICE TRUCK			FREIGHTLINER	2008
270-00	SERVICE TRUCK		KODIAK	CHEV	1995
303-00	BROOM		USED PULL TYPE	SHOPMADE	
307-30	BROOM		RJ350	BROCE	2007
308-00	SWEEPER		SM 250	WALDON	2002
310-00	BROOM		SM250	WALDON	
311-00	BROOM			WALDON	
312-00	BROOM		HYDRAULIC	BROCE	1999

312-40	MOTOR GRADER	40" EXTENSION	140M2	CAT	2012
313-00	BROOM		HYDRAULIC	BROCE	1999
314-30	MOTOR GRADER		140M2	CAT	2014
314-31	MOTOR GRADER		140M2	CAT	2014
316-00	BROOM		SWEEPMASTER	WALDON	1990
316-30	MOTOR GRADER		140M3 ARO	CAT	2016
316-70	BROOM		DT80K	SUPERIOR	2016
316-71	BROOM		DT80K	SUPERIOR	2016
316-72	BROOM		DT80K	SUPERIOR	2016
317-30	MOTOR GRADER		140M3 ARO	CAT	2017
317-70	BROOM		SWEEPMASTER II	WALDON	1997
318-00	BROOM		SWEEPMASTER	WALDON	1993
318-01	BROOM		RJT-350	BROCE	2012
318-30	MOTOR GRADER		140M3 ARO	CAT	2018
318-90	EXCAVATOR		336FL	CAT	2018
318-91	EXCAVATOR		336FL	CAT	2018
318-92	EXCAVATOR		336FL	CAT	2018
319-00	BROOM		SWEEPMASTER	WALDON	1993
319-90	EXCAVATOR		336GC	CAT	2019
320-00	MOTOR GRADER		140H	CAT	2003
320-30	MOTOR GRADER		150	CAT	2020
320-70	BROOM		RCT350	BROCE	2020
320-90	EXCAVATOR		336	CAT	2020
320-91	EXCAVATOR		336	CAT	2020
323-00	MOTOR GRADER		140H	CAT	2001
324-00	MOTOR GRADER		140H	CAT	1996
327-00	MOTOR GRADER		65B	FLAT	1979
330-01	MOTOR GRADER		140H	CAT	2003
331-01	MOTOR GRADER		140H	CAT	2002
332-00	MOTOR GRADER		M65	AC	1972
335-01	MOTOR GRADER		140M	CAT	2012
336-01	MOTOR GRADER		140M	CAT	
337-01	MOTOR GRADER		140M 2	CAT	2013
338-01	MOTOR GRADER		140M2	CAT	2012
338-0A	GPS BLADE CONTROLS		ACCUGRADE	SITECH	2015
339-01	MOTOR GRADER		140M 2	CAT	2012
339-0A	GPS BLADE CONTROLS		ACCUGRADE	SITECH	2015
341-00	MOTOR GRADER		160H	CAT	1996
343-00	MOTOR GRADER	BLADE	140H	CAT	2005
348-00	MOTOR GRADER	ART BLADE	12G	CAT	1976
348-01	GPS BLADE CONTROLS & SURVEY BASE				
348-02	Misc Equipment				
348-03	GPS BLADE CONTROLS & SURVEY BASE		GPS	Trimble	2015
358-00	DOZER		D-8	CAT	1992
359-00	CAT MODEL 6DN DOZER		D6N	CAT	2008
373-00	SCRAPER		613C	CAT	2001
379-00	SCRAPER		615CII	CAT	2005
391-00	SCRAPER		613WW	CAT	2006
393-00	WATER WAGON		613C	CAT	2005
397-00	TRACTOR		PANTHER PTA-325	STRIGER	1981
407-30	ROLLER	STEEL WHEEL	CS142N	DYNAPAC	2007
414-70	ROLLER	STEEL WHEEL	CC722	DYNAPAC	2014

415-30	ROLLER	PNEUMATIC	CP2700	DYNAPAC	2015
415-31	ROLLER	PNEUMATIC	CP2700	DYNAPAC	2015
416-40	ROLLER		CC6200	DYNAPAC	2016
416-70	ROLLER	PNEUMATIC	CP2700	DYNAPAC	2016
416-71	ROLLER		CB64B	CAT	2016
416-72	ROLLER	STEEL WHEEL	CC7200	DYNAPAC	2016
417-70	ROLLER	PNEUMATIC	CP2700	DYNAPAC	2017
417-71	ROLLER	STEEL WHEEL	CC 6200	DYNAPAC	2017
418-70	ROLLER		CC5200VI	DYNAPAC	2018
419-70	ROLLER	VIBRATORY	CB13	CAT	2019
420-70	ROLLER	VIBRATORY	CB13	CAT	2020
422-30	ROLLER	VIBRATORY	CS56B	CAT	2022
422-70	ROLLER	PNEUMATIC	CW34	CAT	2022
446-00	ROLLER	8-10 TON	TANDEM	INGRAM	1977
450-00	ROLLER	5-8 TON	3 WHEEL	INGRAM	1980
453-00	ROLLER	12 TON	CS12	DYNAPAC	1986
454-00	ROLLER	12-14 TON	3 WHEEL	INGRAM	1971
458-01	DD Steel Wheel Roller	Vibratory	CC722	DYNAPAC	2013
459-03	ROLLER	VIBRATORY COMBO	CS56B	CAT	2015
459-04	ROLLER	VIBRATORY COMBO	CS56B	CAT	2015
462-00	ROLLER	8-10 TON	3 WHEEL	DYNAPAC	1988
463-01	ROLLER	8-10 TON	TANDEM	INGRAM	1998
463-02	ROLLER	DD-30	TANDEM	INGE	2004
466-00	ROLLER		CP271	DYNAPAC	2007
467-01	ROLLER		CP132	DYNAPAC	1998
467-02	ROLLER		CP142	DYNAPAC	2005
467-03	ROLLER		CP142	DYNAPAC	2005
467-04	ROLLER	HOT MIX	CC222	DYNAPAC	2005
469-00	ROLLER		PNEUMATIC CP27	DYNAPAC	2007
470-00	ROLLER	25 TON	PNEUMATIC CP27	DYNAPAC	1999
472-00	ROLLER		PNEUMATIC	DYNAPAC	2000
476-00	COMPACTOR	VIBRATORY	CP563E	CAT	2006
481-00	COMPACTOR	VIBRATORY	CP563C	CAT	1998
485-00	ROLLER		GRID	HYSTER(used)	
486-00	ROLLER		ROLLER	TAMPING(used)	
487-00	ROLLER		PNEUMATIC CP27	DYNAPAC	2003
487-01	ROLLER	PNEUMATIC	CP2700	DYNAPAC	2015
488-00	ROLLER		PNEUMATIC CP27	DYNAPAC	2003
488-01	ROLLER	PNEUMATIC	CP2700	DYNAPAC	2015
493-00	COMPACTOR		3-50	REX	1979
494-00	ROLLER	SHEEP FOOT	DOUBLE DRUM	TAMPO(used)	
495-00	COMPACTOR		VIBRATORY	DYNAPAC	1980
499-00	ROLLER	SHEEP FOOT	H2	USED	
505-00	PAVER		461	CEDARRAPIDS	2002
506-00	PAVER	RUBBER TRACK	562R	CEDARAPIDS	2005
511-70	MANLIFT		S-65	GENIE	2011
514-90	MANLIFT	50 FT BOOM	JL T500J	JLG	2014
516-00	CHIP SPREADER			ETNYRE	2007
516-30	WHEEL LOADER	4.5 YD3	950M	CAT	2016
516-31	SKIDSTEER	40'	259D	CAT	2016
516-73	WINDROW ELEVATOR		E550C	WEILER	2016
516-74	LAYDOWN		AP1055F	CAT	2016

516-93	SKIDSTEER		236D	CAT	2016
517-71	WHEEL LOADER		938M	CAT	2017
517-72	WINDROW ELEVATOR		E550C	WEILER	2017
517-73	SHUTTLE BUGGY	REMIXING TRANSFER VEHICLE	E2850	WEILER	2017
517-74	SHUTTLE BUGGY	REMIXING TRANSFER VEHICLE	E2850	WEILER	2017
517-80	WHEEL LOADER		938M	CAT	2017
517-81	WHEEL LOADER		938M	CAT	2017
517-82	WHEEL LOADER		938M	CAT	2017
517-94	WHEEL LOADER		950M	CAT	2017
518-01	CHIP SPREADER		CHIP SPREADER	NEW ENTYRE	2014
518-30	WHEEL LOADER	2.75 YRD	930M	CAT	2018
518-33	WHEEL LOADER		930M	CAT	2018
518-34	WHEEL LOADER		930M	CAT	2018
518-71	WHEEL LOADER		930M	CAT	2018
518-72	WHEEL LOADER		930M	CAT	2018
518-75	SHUTTLE BUGGY	REMIXING TRANSFER VEHICLE	E2850	WEILER	2018
518-90	WHEEL LOADER		WA380-8	KOMATSU	2018
518-92	WHEEL LOADER		938M	CAT	2018
519-71	LAYDOWN MACHINE		AP1055F	CAT	2019
519-72	WHEEL LOADER		980M	CAT	2019
520-70	WHEEL LOADER		980M	CAT	2020
520-71	WHEEL LOADER		980M	CAT	2020
520-91	WHEEL LOADER		980M	CAT	2020
520-93	WHEEL LOADER		980M	CAT	2020
521-30	RECYCLER		WR240I	WIRTGEN WR	2021
521-31	LOADER	5.25 YD3	950GC	CAT	2021
521-70	LAYDOWN MACHINE		AP1055F	CAT	2021
521-80	LOADER		950M	CAT	2021
521-91	LOADER		950M	CAT	2021
522-70	TELEHANDLER		1255	JLG	2022
522-90	WHEEL LOADER		950M	CAT	2022
523-10	SKIDSTEER		259D3 C3H2	CAT	2023
523-30	WHEEL LOADER		950M	CAT	2023
523-31	WHEEL LOADER		938M	CAT	2023
523-70	WHEEL LOADER		950M	CAT	2023
523-71	LOADER		980	CAT	2023
523-72	LOADER		980	CAT	2023
523-90	WHEEL LOADER		980M	CAT	2023
523-91	WHEEL LOADER		980M	CAT	2023
523-92	WHEEL LOADER		980M	CAT	2023
523-93	WHEEL LOADER		980M	CAT	2023
524-70	PAVER		AP1055	CAT	2024
524-71	LOADER		980M	CAT	2024
525-00	SHOULDER UP MACH		1.6 LITRE ENGI	FORD	INE
529-00	WINDROW ELEVATOR			CARLSON	2004
541-00	FORKLIFT		FORKLIFT	KOMATSU	1999
542-00	FORKLIFT		PNEUMATIC P50	NISSAN	1997
543-02	MANLIFT	60'	S60	GENIE	2005
552-00	WHEEL LOADER		I 3040H	LS TRACTOR	2010
554-00	TRACTOR		FE BUCK/R BLAD	FORD	1986
559-01	WHEEL LOADER	3.5 YDS	938G	CAT	2001
563-00	WHEEL LOADER	3 1/4 YDS	938G	CAT	1998

568-01	WHEEL LOADER		938G II	CAT	2006
574-00	WHEEL LOADER		950	CAT	2010
578-00	WHEEL LOADER		938H	CAT	2010
579-00	WHEEL LOADER		938H	CAT	2010
581-00	WHEEL LOADER	4 YDS	624E	JOHN DEERE	1992
585-01	WHEEL LOADER	3.5 YRD	938M	CAT	2015
586-00	WHEEL LOADER		938G II	CAT	2004
597-01	WHEEL LOADER		938K	CAT	2012
603-00	STORAGE TRAILER	4200 GAL TANK	WT100	CLARK	2001
610-21	TRAFFIC SIGNAL	TRAILER MOUNTED	PTS2000		2010
614-01	MESSAGE BOARD		WTMMB	WANCO	2014
614-02	MESSAGE BOARD		WTMMB	WANCO	2014
615-00	STORAGE TRAILER	4200 GAL TANK	WT100	CLARK	1999
616-02	ARROWBOARD		WTSP	WANCO	2016
616-03	ARROWBOARD		WTSP	WANCO	2016
616-04	ARROWBOARD		WTSP	WANCO	2016
616-11	MESSAGE BOARD		WTMMB	WANCO	2016
616-12	MESSAGE BOARD		WTMMB	WANCO	2016
616-13	MESSAGE BOARD		WTMMB	WANCO	2016
617-10	UTILITY TRAILER	83" X 18' STEEL FLOOR	CAR HAULER	STAGECOACH	2016
617-11	UTILITY TRAILER	83" X 20'	FLATBED	MAXEY	2017
617-30	UTILITY TRAILER	83" X 16'		MAXEY	2017
617-31	UTILITY TRAILER	83" X 16'		MAXEY	2017
617-32	UTILITY TRAILER	83" X 16'		MAXEY	2017
617-33	ARROWBOARD TRAILER	ATTENUATOR	TTMA CORDED AB &	GREGORY INDUSTRI	2017
617-34	ARROWBOARD TRAILER	ATTENUATOR	TTMA CORDED AB &	GREGORY INDUSTRI	2017
617-35	ARROWBOARD TRAILER	ATTENUATOR	TTMA CORDED AB &	GREGORY INDUSTRI	2017
617-71	ASPHALT TANKER		ASPHALT TANKER	ETNYRE	1998
617-72	ASPHALT TANKER		ASPHALT TANKER	ETNYRE	1998
617-73	ASPHALT TANKER		ASPHALT TANKER	ETNYRE	1998
617-74	CARGO TRAILER	8.5 X 20	CARGO TRL	CONTINENTAL	2017
617-75	UTILITY TRAILER	18 X 82 TA	UTILITY	DIAMOND C	2014
618-01	MESSAGE BOARD	TRAILER	651	SMC2000FM ST	2018
618-03	MESSAGE BOARD	TRAILER	13520	SMC2000FM	2018
618-04	MESSAGE BOARD	TRAILER	13521	SMC2000FM	2018
618-05	MESSAGE BOARD	TRAILER	627	SMC2000FM ST	2018
618-30	TRAILER		CC242	PJ	2018
618-31	PNEUMATIC TRAILER	ALUMINUM		HEIL	2018
618-70	CARGO TRAILER	8.5 X 20	CARGO TRL	CONTINENTAL	2018
619-01	MESSAGE BOARD		WTMMB	WANCO	2019
619-02	MESSAGE BOARD		WTMMB	WANCO	2019
619-03	MESSAGE BOARD		WTMMB	WANCO	2019
619-04	MESSAGE BOARD		WTMMB	WANCO	2019
619-60	TRAILER	BRUCKNERS #T1901	BELLY DUMP	ARMORLITE	2019
619-61	TRAILER	BRUCKNERS #T1902	BELLY DUMP	ARMORLITE	2019
619-62	TRAILER	BRUCKNERS #T1903	BELLY DUMP	ARMORLITE	2019
619-63	TRAILER	BRUCKNERS #T1904	BELLY DUMP	ARMORLITE	2019
619-64	TRAILER	BRUCKNERS #T1905	BELLY DUMP	ARMORLITE	2019
619-65	TRAILER	BRUCKNERS #T1906	BELLY DUMP	ARMORLITE	2019
619-66	TRAILER	BRUCKNERS #T1907	BELLY DUMP	ARMORLITE	2019
619-67	TRAILER	BRUCKNERS #T1908	BELLY DUMP	ARMORLITE	2019
619-68	TRAILER	BRUCKNERS #T1909	BELLY DUMP	ARMORLITE	2019

619-69	TRAILER	BRUCKNERS #T1910	BELLY DUMP	ARMORLITE	2019
620-00	TRAILER		TNYR PRTN50TD3-T1	BLACKHAWK E	1999
620-01	MESSAGE BOARD		SMC2000 FM	WORK AREA PROTE	2020
620-02	MESSAGE BOARD		SMC2000 FM	WORK AREA PROTE	2020
620-03	MESSAGE BOARD		SMC2000 FM	WORK AREA PROTE	2020
620-04	MESSAGE BOARD		SMC2000 FM	WORK AREA PROTE	2020
620-05	MESSAGE BOARD		SMC2000 FM	WORK AREA PROTE	2020
620-06	MESSAGE BOARD		SMC2000 FM	WORK AREA PROTE	2020
620-07	MESSAGE BOARD		SMC2000 FM	WORK AREA PROTE	2020
620-08	ENCLOSED TRAILER		EZE	ALCO	2020
620-12	ARROWBOARD		AW-16	WORK AREA PROTE	2020
620-13	ARROWBOARD		AW-16	WORK AREA PROTE	2020
620-14	ARROWBOARD		AW-16	WORK AREA PROTE	2020
620-15	ARROWBOARD		AW-16	WORK AREA PROTE	2020
620-16	ARROWBOARD		AW-16	WORK AREA PROTE	2020
620-17	ARROWBOARD		AW-16	WORK AREA PROTE	2020
620-30	ATTENUATOR		TTMA 200	GREGORY INDUSTRI	2020
620-31	ATTENUATOR		TTMA 200	GREGORY INDUSTRI	2020
620-32	ATTENUATOR	SOLAR	TTMA 200	GREGORY INDUSTRI	2020
620-33	ATTENUATOR	SOLAR	TTMA 200	GREGORY INDUSTRI	2020
620-34	ATTENUATOR		TTMA 200	GREGORY HIGHWAY	2020
620-35	ATTENUATOR		TTMA 200	GREGORY HIGHWAY	2020
620-70	UTILITY TRAILER	18X82		DIAMOND C	2020
620-71	CARGO TRAILER		U SERIES	CONTINENTAL	2020
620-72	CARGO TRAILER		U SERIES	CONTINENTAL	2020
621-00	TRAILER		TK100 LOWBOY	TRAIL KING	1998
621-01	MESSAGE BOARD		SMC2000 FM	WORK AREA PROTE	2021
621-02	MESSAGE BOARD		SMC2000 FM	WORK AREA PROTE	2021
621-03	MESSAGE BOARD		SMC2000 FM	WORK AREA PROTE	2021
621-04	MESSAGE BOARD		SMC2000 FM	WORK AREA PROTE	2021
621-05	MESSAGE BOARD		SMC2000 FM	WORK AREA PROTE	2021
621-06	MESSAGE BOARD		SMC2000 FM	WORK AREA PROTE	2021
621-07	MESSAGE BOARD		SMC2000 FM	WORK AREA PROTE	2021
621-08	MESSAGE BOARD		SMC2000 FM	WORK AREA PROTE	2021
621-30	TRAFFIC SIGNAL LIGHT	TRAILER MOUNTED	PTS2000	ADDCO	2021
621-31	TRAFFIC SIGNAL LIGHT	TRAILER MOUNTED	PTS2000	ADDCO	2021
621-73	STORAGE ASPHALT TRAILER	BRUCKNERS #T2101	ARJH 7500	POLAR	2020
621-74	STORAGE ASPHALT TRAILER	BRUCKNERS #T2102	ARJH 7500	POLAR	2020
621-75	STORAGE ASPHALT TRAILER	BRUCKNERS #T2103	ARJH 7500	POLAR	2020
621-76	STORAGE ASPHALT TRAILER	BRUCKNERS #T2104	ARJH 7500	POLAR	2020
623-10	ARROWBOARD		AW10525	HILL & SMITH INC	2023
624-01	MESSAGE BOARD		SMC2000 FM	WORK AREA PROTE	2024
624-02	MESSAGE BOARD		SMC2000 FM	WORK AREA PROTE	2024
624-03	MESSAGE BOARD		SMC2000 FM	WORK AREA PROTE	2024
624-04	MESSAGE BOARD		SMC2000 FM	WORK AREA PROTE	2024
624-05	MESSAGE BOARD		SMC2000 FM	WORK AREA PROTE	2024
624-06	MESSAGE BOARD		SMC2000 FM	WORK AREA PROTE	2024
624-11	ARROWBOARD		AW-16	HILL & SMITH INC	2024
624-12	ARROWBOARD		AW-16	HILL & SMITH INC	2024
624-13	ARROWBOARD		AW-16	HILL & SMITH INC	2024
624-14	ARROWBOARD		AW-16	HILL & SMITH INC	2024
624-15	ARROWBOARD		AW-16	HILL & SMITH INC	2024

624-16	ARROWBOARD		AW-16	HILL & SMITH INC	2024
634-00	STORAGE TANK	STOILER MOUNTED	4200 GAL	SUREWAY	1977
635-00	STORAGE TANK	STOILER MOUNTED	4200 GAL	SUREWAY	1976
636-00	STORAGE TANK	STOILER MOUNTED	4200 GAL	SUREWAY	1976
637-00	STORAGE VAN	STOILER MOUNTED	40' T-A	LUFKIN	1966
637-01	CARGO TRAILER	CARILER MOUNTED		CONTINENTAL	2016
637-02	CARGO TRAILER	CARILER MOUNTED		CONTINENTAL	2015
637-03	CARGO TRAILER	CARILER MOUNTED		CONTINENTAL	2015
638-00	STORAGE TRAILER	STOILER MOUNTED	4200 TANK	CLARK	1992
638-01	STORAGE TRAILER	STOILER MOUNTED	INSULATED TANK 76(	FRUE	1984
639-00	STORAGE TRAILER	4200 GAL TANK	WT100 TANK	CLARK	1995
640-00	STORAGE TRAILER	STOILER MOUNTED	TANK	SUREWAY	1977
641-00	TRAILER UTILITY	TRAILER MOUNTED		CARR	2011
643-01	TRAILER UTILITY	TRAILER MOUNTED	FLATBED	TRANSCRAFT	1991
644-00	STORAGE TRAILER	3500 GAL TANK	TANK	CORBETT	1953
645-00	STORAGE TRAILER	4200 GAL TANK	WT100	CLARK	1995
646-00	STORAGE VAN	ELECTRIC	INSULATED	FRUEHAUF	1956
648-00	TRAILER UTILITY	TRAILER MOUNTED	GOOSENECK 24'	BIG TEX	1991
648-01	HAZMAT RESPONSE TRAILER	HAZILER MOUNTED		BIG TEX	1992
649-01	STORAGE VAN	STOILER MOUNTED	ALUMINUM T-A	STRICK	1964
650-00	STORAGE VAN	STOILER MOUNTED	ELECTRIC	TRAILMOBILE	1961
651-01	TRAILER UTILITY	TRAILER MOUNTED	1995	BIG TEX	1995
651-02	TRAILER UTILITY	TRAILER MOUNTED		BIG TEX	1993
651-03	TRAILER UTILITY	TRAILER MOUNTED	16 FT	BIG TEX	1993
651-04	TRAILER SERVICE	TRAILER MOUNTED		BIG TEX	1995
651-06	TRAILER UTILITY	TRAILER MOUNTED		BIG TEX	1994
651-07	TRAILER CARGO	TRAILER MOUNTED		WELLS CARGO	1995
651-08	TRAILER	TRAILER MOUNTED		WELLS CARGO	2007
651-09	TRAILER UTILITY	TRAILER MOUNTED		BIG TEX	1996
651-11	STORAGE TANK TRAILER	STOILER MOUNTED	5'X10' S-A	WTA	1997
651-13	STORAGE TRAILER	STOILER MOUNTED	500 GAL TANK	SHOPMADE	1998
651-14	STORAGE TRAILER	STOILER MOUNTED	500 GAL TANK	SHOPMADE	1998
651-15	TIRE TRAILER	T-A		SHOPMADE	1998
651-16	TRAILER SERVICE	TRAILER MOUNTED		SHOPMADE	1999
651-19	STORAGE TANK	STOILER MOUNTED	USED OIL S-A	SHOPMADE	1998
651-20	TRAILER CARGO	TRAILER MOUNTED	AN	PACE AMERIC	1998
651-21	TRAILER UTILITY	TRAILER MOUNTED	16'	BIG TEX	1999
651-22	TRAILER CARGO	TRAILER MOUNTED	AN	PACE AMERIC	2000
651-23	TRAILER	TRAILER MOUNTED		BIG TEX	2000
651-25	TRAILER UTILITY	TRAILER MOUNTED	T-A	BIG TEX	2000
651-26	TRAILER UTILITY	TRAILER MOUNTED	16' T-A	BIG TEX	2001
651-27	LIGHT TOWER TRAILER	LIGILER MOUNTED	LITETOUR CRP59	SPECIALTY LIGHT	1998
651-29	TRAILER CORE		8' T-A	SHOPMADE	2000
651-31	TRAILER UTILITY	TRAILER MOUNTED	16' T-A	BIG TEX	2002
651-33	STORAGE VAN	STOILER MOUNTED		HOBBS	1973
651-35	TRAILER SERVICE	TRAILER MOUNTED		BIG TEX	2004
651-36	TRAILER UTILITY	TRAILER MOUNTED		BIG TEX	1994
651-37	TRAILER UTILITY	2005/SHOP	16' T-A	SHOPMADE	2005
651-38	LIGHT TOWER TRAILER	LIGILER MOUNTED	RP4260	WC	2004
651-42	STORAGE VAN	STOILER MOUNTED	BOX	TRUCK ENTERPISES	1993
651-44	LIGHT TOWER TRAILER	LIGILER MOUNTED	NORMAN POWER SY	CAT	2008
651-47	RAMPGATE TRAILER	RAMILER MOUNTED	5X8	BIG TEX	1994

651-48	TRAILER	TRAILER MOUNTED	6.5'X16'	BIG TEX	1992
651-49	TRAILER	TRAILER MOUNTED	12'-1000	BIG TEX	1998
652-01	TRAILER TRASH	TRAILER MOUNTED	16'	BIG TEX	2000
652-02	TRAILER TRASH	TRAILER MOUNTED	16'	BIG TEX	2000
652-03	TRAILER TRASH	TRAILER MOUNTED	16'	BIG TEX	2000
652-04	TRAILER TRASH	TRAILER MOUNTED	16'	BIG TEX	2005
652-05	TRAILER TRASH	TRAILER MOUNTED	16'	BIG TEX	2005
653-00	STORAGE TRAILER	7000 GAL	HARMEN TANK	HARMON	1990
655-00	STORAGE TANK	7500 GAL		TRAILMOBILE	1979
656-00	STORAGE TANK	4200 GAL		FRUEHAUF	1954
658-00	TRAILER UTILITY	TRAILER MOUNTED	T-A	BIG TEX	1990
658-01	LIGHT TOWER TRAILER	PORTABLE	RP8255	CAT	2008
659-00	STORAGE ASPHALT TRAILER	7000 GAL		HOBBS	1982
660-00	STORAGE TANK	4200 GAL		HARMON	1985
661-00	TRAILER	FLATBED		SNOWDEN	1949
662-00	STORAGE TANK	4200 GAL		DELTA	1964
663-00	WATER TRUCK	WATILER MOUNTED		HOLLICE CLARK	2002
664-00	STORAGE TANK	25000 GAL	S25TS	SUNDANCE	1989
665-00	TRAILER	W/ EMULSION TRAILER		SHOPMADE	1975
668-01	TRAILER	TRAILER MOUNTED	NG	CMI LOAD KI	2006
668-18	TRAILER	LOW BOY WITH 5 AXLE	60CC	TALBERT	2018
672-00	STORAGE TANK	PRIME OIL	20,000 GAL	SUREWAY	1973
673-00	STORAGE TANK	STOILER MOUNTED	40'	LUFKIN	1967
674-00	TRAILER FUEL TANK	TRAILER MOUNTED		COUGAR	1983
674-01	TRAILER FUEL TANK	TRAILER MOUNTED		FRUEHAUF	1976
674-02	TRAILER FUEL TANK	TRAILER MOUNTED		FRUEHAUF	1976
675-00	STORAGE TANK	CSS1H	6500 GAL	TRAILMOBILE	1980
676-00	STORAGE ASPHALT TANK	STOILER MOUNTED	6000 GAL	GORBETT	1962
678-00	STORAGE VAN .	STOILER MOUNTED	28'	FRUEHAUF	1946
679-00	STORAGE VAN	STOILER MOUNTED	32'	HOBBS	1952
681-00	DOLLY	T-A	FB	TANDEM DOLLY	1985
681-02	DOLLY	S-A		SHOPMADE	1997
682-00	STORAGE TANK TRAILER	STOILER MOUNTED		H-C	1998
683-00	STORAGE VAN	STOILER MOUNTED	40'	FRUEHAUF	1969
685-00	STORAGE TANK TRAILER	STOILER MOUNTED		TRAILMOBILE	1959
686-01	TRAILER	TRAILER MOUNTED		CHAN	2007
687-00	LOWBOY TRAILER	LOWILER MOUNTED	5O TON	ETNYRE	1993
687-01	DOLLY	DOLILER MOUNTED	2-AXLE	ETNYRE	1993
688-00	STORAGE VAN	STOILER MOUNTED	21'	FRUEHAUF	1954
689-00	STORAGE VAN	STOILER MOUNTED	34'	STRICK	1966
690-00	STORAGE ASPHALT TRAILER	STOILER MOUNTED	7000 GAL	HOBBS	1982
690-01	STORAGE TANK TRAILER	STOILER MOUNTED	ASHPALT BOOSTER	ARCO	1977
690-02	STORAGE ASPHALT TRAILER	STOILER MOUNTED	TANK	FRUEHAUF	1974
690-03	STORAGE ASPHALT TRAILER	STOILER MOUNTED	TANK	ETNYRE	1976
690-04	STORAGE ASPHALT TRAILER	STOILER MOUNTED	TANK	ETNYRE	1974
692-00	STORAGE TANK TRAILER	STOILER MOUNTED		TRAILMOBILE	1973
693-00	STORAGE VAN	STOILER MOUNTED	35'	TRAILMOBILE	1957
694-00	STORAGE VAN	STOILER MOUNTED	32'	TRAILMOBILE	1955
695-00	STORAGE TRAILER	STOILER MOUNTED	36'	FRUEHAUF	1956
696-00	STORAGE VAN	STOILER MOUNTED	40'	FRUEHAUF (USED)	
697-00	STORAGE VAN	STOILER MOUNTED	TANDEM	BROWN	1958
698-00	TRAILER FUEL TANK	TRAILER MOUNTED	DBLE COMPART.	MERIT	1970

699-00	STORAGE VAN	W/ GEN 500KWC	40'	STRICK	1969
705-00	STACKING CONVEYOR	STAILER MOUNTED	30 X 80	EXCEL	2005
706-00	CONVEYOR TELESTAC	CONILER MOUNTED	36" X 150'	SUPERIOR	2003
707-00	CONVEYOR TELESTAC	CONILER MOUNTED		SUPERIOR	2001
708-00	CONVEYOR	CONILER MOUNTED	36" X 50'	LATTICE CONVEYOR	
709-00	CONVEYOR	CONILER MOUNTED	48"X50'	FRAM CONVEYOR	
709-01	CONVEYOR RADIAL 3	CONILER MOUNTED	30"X60'	KPI	2008
709-02	TELESTACKER	TELILER MOUNTED	36" X 50'	SUPERIOR	2009
709-03	RADICAL STACKER	BELT SCALE	30"X60' TK01291	KOLBERG	2010
709-04	RADICAL STACKER	BELT SCALE	30''X60' TK01294	KOLBERG	2010
709-05	RADICAL STACKER	BELT SCALE	30"X60' TK01291	KOLBERG	2010
709-06	RADICAL STACKER	RADILER MOUNTED		KOLBERG	2011
709-07	SUPER STACKER	SUPILER MOUNTED	33-36-150	KOLBERG	2011
709-08	SUPER STACKER	SUPILER MOUNTED	33-36-150	KOLBERG	2011
709-09	Fold Down Telestacker	36X150	36X150	Superior	2013
709-10	TELESTACKER	36 x 150		SUPERIOR	2015
710-00	CONVEYOR TELESTACKER	CONILER MOUNTED	36" X 150'	SUPERIOR	2001
711-00	BELT SAMPLER	BELILER MOUNTED	AUTOMATIC 24''ABS	SUPERIOR	2003
711-30	CONVEYOR -AGGREGATE SAND	CONILER MOUNTED			1991
712-00	80'CONVEYOR	TRACK TYPE	TS80	EDGE	2015
713-70	80 KW GENERATOR	80 ILER MOUNTED	82 KW/ 100KVA	CAT	2013
716-00	CONVEYOR	CONILER MOUNTED	36" X 60'		1973
717-90	30 KW GENSET	30 ILER MOUNTED	XQ 30	CAT	
718-70	CONCRETE SAW		SK14-13H	EDCO	2018
718-77	GENSET	1000 KW	C32	CATERPILLAR	2018
719-70	CONCRETE SAW		SK14-13H	EDCO	2019
720-70	CONCRETE SAW		SK14-13H	EDCO	2020
727-00	BELT SCALES			MODEL 45	
728-00	CONVEYOR		30" X 50'		
729-00	BELT SCALES	54"			
729-01	CONVEYOR	W/ 25 YD BIN	52" X 36'		
730-00	25 CUBIC YD BIN				
731-00	SINGLE BIN			SINGLE BIN	
732-00	CONVEYOR		30" X 60'		
733-00	CONVEYOR	PEERLESS STACKER	24" X 150'	CONVEYOR	
734-00	CONVEYOR		48" X 50'		
735-00	CONVEYOR		48" X 50'		
736-00	CONVEYOR		36" X 50'	SHOPMADE	1997
736-01	CONVEYOR		36" X 50'	SHOPMADE	1997
736-02	CONVEYOR		36" X 50'	SHOPMADE	1998
736-03	CONVEYOR		36" X 50'	SHOPMADE	1998
736-04	CONVEYOR		36" X 50'	SHOPMADE	1998
736-05	CONVEYOR		36" X 50'	SHOPMADE	1998
736-06	CONVEYOR		48" X 20'	SHOPMADE	1998
736-07	CONVEYOR		36" X 50'	SHOPMADE	1998
736-08	CONVEYOR		36" X 50'	SHOPMADE	1998
736-09	CONVEYOR		24" X 40"	SHOPMADE	
736-10	CONVEYOR		24" X 40 "	SHOPMADE	
738-00	CONVEYOR ON WHEELS		24" X 65'		
739-00	CONVEYOR TECTRONMAGNET				
740-00	LOADING BIN ON WEELS				
741-00	FEEDER BIN ON WHEELS				

742-00	SINGLE BIN ON WHEELS				
743-00	SINGLE BIN ON WHEELS		RECIPRACTNG FDR		
744-00	SINGLE BIN				
744-01	SINGLE BIN				
744-02	SINGLE BIN				
744-03	SINGLE BIN				
744-04	SINGLE BIN				
744-05	SINGLE BIN				
745-00	SINGLE BIN				
746-00	CONVEYOR		30" X 36' 4X10DD	TELESMITH	
765-00	CONVEYOR		34" X 60'		
769-00	WELDING MACHINE		225G	BOBCAT	1994
770-00	HOT MIX PLANT			ALMIX	2015
770-01	GENSET	1000 KW	C32	CAT	2016
773-00	TICNETIC SCALES				
774-00	PORTABLE HOT MIXplant		E500	CEDARAPIDS	1999
774-03	CIRCULATING HOT OIL HEATER		JACKETED FIREBOX	CEI-2000A	2003
775-00	PORTABLE ULTRAPLANT		500 TPH	GENCOR	1996
775-06	SELF ERECTING SILO	100 TON			1996
775-08	ASPHALT HEATER		SINGLE CMPRTMEN	CEI	1999
775-10	STORAGE FUEL TANK	MOUNTED ON SKID	10'6"X32' HORIZ		2004
775-11	CIRCULATING HOT OIL HEATER		240A	CEI-2400A	2004
775-13	FUEL OIL HEATER	F/ U775-01	C-HFP-100R	CEI	2011
775-14	80 KW GENSET	SKID MOUNTED WITH FUEL TANK	80RF5WLP/QM	HANCO	2015
775-20	GENSET	1000KW	C32	CAT	2020
776-06	GENERATOR		50 KW	ONAN	1995
776-07	STORAGE DIESEL TANK		8000 GAL		
777-13	CONVEYOR				
777-14	CONVEYOR				
777-16	BINS				
777-17	STORAGE FUEL TANK	MOUNTED ON SKID		USED	
777-20	STORAGE FUEL TANK		12,000 GAL		
777-21	STORAGE FUEL TANK		12,000 GAL		
778-00	STORAGE FUEL TANK	5000 BARREL	D-1814		
779-00	STORAGE FUEL TANK	YARD CLEAR	HORIZONTAL		
780-00	J12 TAMPER		J12		
780-01	J12 TAMPER		MVC77H	MQ	
780-02	J12 TAMPER		J12		
780-03	J12 TAMPER		J12		
780-04	J12 TAMPER		J12		
780-05	TAMPER		BX8	COMPACTOR	1991
780-07	TAMPER J12		MVC77H	MQ	1997
780-08	TAMPER J12		MVC77H	MQ	1997
780-09	TAMPER J12		MVC77H	MQ	1997
780-10	TAMPER	COMPACTOR REV.PLATE		USED	
780-11	COMPACTOR MULTIQUIP		MVL-90		2004
780-12	TAMPER PLATE		MVC77H	MQ	2009
782-00	TRAILER PIPE		6'X30' T-A	SHOPMADE	1999
783-00	CONCRETE SAW		PAC1V13HP	TARGET	
783-02	CONCRETE SAW		PAC1V13HP	TARGET	
783-03	CONCRETE SAW	18"	FS413	HUSQVARNA	2014
784-00	CONCRETE SAW		PAC1V	TARGET	

785-00	CONCRETE SAW		PAC1V	TARGET	
786-00	CONCRETE SAW		9 HP		
787-00	CONCRETE SAW		9 HP		
789-00	RAP BIN				1982
790-00	HM PLANT		100 X 32	CEDARAPIDS	1984
790-03	STORAGE TANK	W/ HOT OIL HEATER	25,000 GAL		
790-04	12 X 13 CONTROL H				OUSE
790-05	CONVEYOR	W/ SCREEN ON WHEELS	42" X 8'		1982
790-06	SPEED CONTROL				
790-07	SHOPMADE LOGWASHE		MIXER	PUGMILL	R
790-10	DRYER		A790A	CEDARAPIDS	1982
790-12	BAG HOUSE	PORTABLE	11060P/13	USED	
791-00	TRAILER MOUNTED SILO		300 BBL	BELGRADE	
792-00	GENERATOR	MOUNTED SKID	30KW	ONAN	
793-00	TRAILER OFFICE	STATIONARY	823	ACE	1978
796-01	ARROWBOARD TRAILER			SOLAR TECH.	1995
796-02	ARROWBOARD	TRAILER	MSNA431	15L PRO LINE AW	2013
796-03	ARROWBOARD		PROLINE	SOLAR	2013
796-04	ARROWBOARD TRAILER			SOLAR	1999
796-05	SOLAR ARROWBOARD TRAILER		MSNA466	15L PRO LINE AW	2013
796-08	ARROWBOARD			BEMIS	1999
796-09	ARROWBOARD			BEMIS	1999
796-10	ARROWBOARD			BEMIS	1999
796-15	MESSAGE BOARD	TRAILER	MSN05016	SMC1000	2003
796-17	MESSAGE BOARD	TRAILER	MSN05087	SMC1000	2003
796-18	ARROWBOARD			SOLAR	2008
796-22	ARROWBOARD		WANCO 228	SOLAR	2001
796-27	RADAR BOARD TRAILER			WANCO	2013
796-30	RADAR BOARD TRAILER		WSDT3-S	WANCO	4/22/2014
796-31	RADAR BOARD TRAILER		WSDT3-S	WANCO	4/22/2014
796-32	RADAR BOARD TRAILER		WSDT3-S	WANCO	5/30/2014
796-33	RADAR BOARD TRAILER		WSDT3-S	WANCO	5/30/2014
796-34	RADAR BOARD TRAILER		WSDT3-S	WANCO	2015
796-35	RADAR BOARD TRAILER		WSDT3-S	WANCO	2015
796-38	RADAR BOARD TRAILER		WSDT3-S	WANCO	2015
796-40	MESSAGE BOARD		WTMMB	WANCO	2016
796-41	MESSAGE BOARD		WTMMB	WANCO	2016
796-42	RADAR TRAILER		WSDT3-S	WANCO	2016
796-43	RADAR TRAILER		WSDT3-S	WANCO	2016
796-44	RADAR TRAILER		WSDT3-S	WANCO	2016
796-46	RADAR TRAILER		WSDT3-S	WANCO	2016
796-47	RADAR TRAILER		WSDT3-S	WANCO	2016
796-50	RADAR TRAILER		WSDT3-S	WANCO	2016
796-52	ARROW BOARD	SOLAR PANEL #SLP055-12	WTSP	WANCO	2017
796-53	ARROW BOARD	SOLAR PANEL #SLP055-12	WTSP	WANCO	2017
796-54	ARROW BOARD	SOLAR PANEL #SLP055-12	WTSP	WANCO	2017
796-56	ARROW BOARD	SOLAR PANEL #SLP055-12	WTSP	WANCO	2017
796-57	ARROW BOARD	SOLAR PANEL #SLP055-12	WTSP	WANCO	2017
797-00	TRAILER UTILITY			SHOPMADE	1980
798-00	TRAILER UTILITY			SHOPMADE	1980
802-00	TRAILER	MOUNTED STEAMER		BIG TEX	1992
802-01	TRAILER	MOUNTED STEAMER		ADKINS	1999

802-02	TRAILER	MOUNTED STEAMER	DIESEL	COUGAR	2015
803-00	TRAILER UTILITY			BIG TEX	1989
804-00	PRESSURE WASHER		HDS 3.9	COUGAR	2007
804-02	POWER WASHER	MODEL #HSE-350-OM10	NVA215TBFW7039A	STAHLIN TYPE 4X	2014
805-00	WATER PUMP	LISTER DIESEL MOTOR	6 X 4	DEMING	1964
806-00	WATER PUMP	5"X6"	90M-5014	MISSION	1970
807-00	WATER PUMP	MOUNTED ON SKID	4 X 4 15 HP	DEMING	
808-01	ENG. W/5X4 MISSION PUMP			LISTER	1995
808-02	ENG. W/5X4 MISSION PUMP			LISTER	1995
808-03	TRANSMISSION SERVICE MACHINE				
808-05	MODIS	W/ CONNECT HARDWARE CASE	USED	SNAP-ON	
808-06	DIAGNOSTICS	W/ LOCK CAB	USED	EASE	
808-10	WATER PUMP		PP44S10L71D914	PIONEER	2008
810-00	12'X45' WHEEL MOUNTED	TYPE B LAB	12'X 45'	ACE	
811-10	WATER PUMP		PP66S12L71D914	PIONEER	2011
814-00	BUILDING	ON SKID 8'X20'			1972
814-10	WATER PUMP		PP44S10L71TD2.9	PIONEER	
816-00	OFFICE TRAILER	40'	T1042 (10X38)	AMTEX	
817-00	SKID BUILDING	8'x20'			
817-10	WELDER	TRAILBLAZER 302 AIR PAK	MH020063R	MILLER	2017
819-00	FIELD OFFICE	12'X32'			
819-01	LAB HOUSE	TYPE B 12'X45'			
819-02	LAB HOUSE	TYPE B 12'X50'	12'6"X14'6"X65		
819-03	TRAILER UTILITY		12'X 56'	MORGAN	1985
819-04	CORE CRUSHER			SHOPMADE	1997
819-05	LAB STATIONARY				
819-06	GYRATORY COMPACTOR	150MM	5850	TROXLER	2017
819-07	IGNITION OVEN	NU4731-D/NCAT	4731	TROXLER	2017
819-08	PAVE TRACKER	NU2701BD-I	2701B	TROXLER	2017
820-00	STORAGE WATER	MOUNTED ON SKID	500 BBL		
821-00	STORAGE WATER 191 RACK	MOUNTED ON SKID	500 BBL		
822-00	STORAGE	MOUNTED ON SKID	500 BBL		
823-00	STORAGE FUEL TANK		2000 GAL		
824-00	STORAGE BURNER FUEL WHEEL		500 BBL		
825-00	STORAGE FUEL	HORIZONTAL	500 BBL		
826-00	STORAGE STEEL TANK 21'6"X16	21'6"X16' 1000BBL 191	433B	PERMIAN	
827-00	STORAGE SKID	W/5 FILTER POT	21,000 GAL		
828-00	STORAGE FUEL SKID		2,000 GAL		
829-00	STORAGE FUEL SKID		2,000 GAL		
830-00	STORAGE FUEL SKID		8,000 GAL		
830-01	STORAGE FUEL		8,000 GAL		
830-02	STORAGE FUEL	UNLEADED AT YARD	10,000 GAL		
830-03	STORAGE DIESEL		10,000 GAL		
831-00	STORAGE FUEL SKID		8,000 GAL		
832-00	STORAGE FUEL SKID		8,000 GAL		
833-00	STORAGE FUEL SKID		8,000 GAL		
834-00	STORAGE FUEL SKID	(W/U991&U912)	8,000 GAL		
835-00	STORAGE FUEL		500 BBL		
836-00	EMULSION TANK		500 BBL		
837-00	EMULSION TANK		500 BBL		
838-00	STORAGE FUEL	YARD DIESEL RED	500 BBL		
839-00	STORAGE FUEL	LIL PIT	77,000 GAL		

840-00	STORAGE FUEL		8'X32'		
841-00	STORAGE EMULSION TANK	W/ HOT OIL HEATER	8,000 GAL (ST507)		
842-04	STORAGE WATER TANK		500 BBL		
842-05	STORAGE WATER TANK		500 BBL		
842-10	STORAGE WATER TANK		500 BBL		1992
842-11	STORAGE FRAC		500 BBL		1992
842-17	STORAGE FRAC TANK	CLASS B	500BBL	DRAGON	
842-18	STORAGE FRAC TANK	CLASS C	500BBL	DRAGON	
843-00	STORAGE WATER TANK	SKID	500 BBL		
844-00	STORAGE WATER TANK	SKID	500 BBL	LISTER ?	1980
845-00	STORAGE DIESEL TANK	SKID	500 BBL		
846-00	STORAGE WATER TANK	SKID	11,000 GAL (433FB)		
847-00	STORAGE WATER TANK	HORIZONTAL	500 BBL		
848-00	STORAGE STEEL TANK	21'6"X16' 191	1,000 BBL		
849-00	WELDER	MOUNTED ON UNIT #651-23	WD5	MILLER	1992
851-00	AIR COMPRESSOR			TAYLOR BEALL	
852-00	WELDER		BIG 400-D	MILLER	
853-00	WELDER		BIG 400-D	MILLER	
855-00	AIR COMPRESSOR SKID MOUNTED		M125	SHOPMADE	2001
862-00	BUILDING		8 X 16	CENTEX	
870-01	TRAILER	MOUNTED WATER RACK		SHOPMADE	2000
870-02	TRAILER	MOUNTED WATER RACK		SHOPMADE	2000
870-03	TRAILER WATER			SHOPMADE	
870-04	TRAILER WATER			SHOPMADE	
870-05	TRAILER WATER			SHOPMADE	
872-00	TRAILER	MOUNTED WATER PUMP	6"	JAEGER	1977
873-00	BLAST MONITOR				
876-00	TRAILER	W/ TRASH PUMP	4X4		
877-00	WATER PUMP		2X3 30HP		
879-00	TRASH PUMP (PORTABLE)	PORTABLE	2X2 5HP	GORM RUPP	
881-00	TRAILER	IN USE PER KEVIN		SHOPMADE	2007
884-00	MECHANICAL SCALES		34-6060SD	WINSLOW	1994
884-01	MECHANICAL SCALES		34-6060SD	WINSLOW	1994
885-00	TRUCK SCALES W/790	W/ 790	70'	WINSLOW	1968
885-01	TRUCK SCALES & Builing		70' (3450A50)	WINSLOW	1974
885-02	TRUCK SCALES & Builing		50'	WINSLOW	
885-03	TRUCK SCALES	W/ 10 APPROACH (PORTABLE)	60' X 11'	RUSTY'S	1996
885-04	TRUCK SCALES		3535-60	CARDINAL	1998
885-05	PORTABLE SCALES		RW6810ST	CONV. CARDINAL	1999
885-06	PORTABLE SCALES		RW7011SRS	RUSTY'S	1999
885-07	PORTABLE SCALE HOUSE		8' X 10'		
885-08	PORTABLE SCALE		10' X 70'	CARDINAL	
885-09	TRUCK SCALE	PORTABLE	11' X 70'	RUSTY'S	
885-11	TRUCK SCALE	PORTABLE	BPV7010	WEIGH TRONIX	
885-12	SCALE		PT300	INTERCOMP	
885-13	SCALE HOUSE 191				2015
886-00	SCALES	PORTABLE	40'X10'	CARDINAL	1994
887-00	SCALES &BLDG	PORTABLE	2525-50PR	CARDINAL	1979
888-00	SCALE EXTENSION		RW2010SR	20'X10'	
910-00	PUG MILL	300 TPH STATIONARY		RANGER	2014
910-01	PUG MILL	300 TPH MOBILE		RANGER	2015
910-02	PUG MILL	300 TPH MOBILE		RANGER	2016

910-03	PUG MILL	300 TPH MOBILE		RANGER	2018
910-04	PUG MILL	300 TPH MOBILE		RANGER	2019
910-90	GENSET	600KW	WC600	CAT	2010
910-91	GENSET	20KW	N20	CAT	2010
911-05	TRAILER FOR BACKHOE				OE
911-06	TRAILER UTILITY		S-A		
911-08	PORTABLE SURGE BIN				1995
912-01	MODEL 200 BELT SCALE		200		1997
912-90	GENSET	20KW	N20	SL	2012
913-00	IMPACT CRUSHER			PARKINSON/UNIV	1994
913-01	PORTABLE SAND BIN				
913-02	PORTABLE SAND BIN				
913-90	GENSET	20KW	N20	SL	2013
913-91	GENSET	20KW	N20	SL	2013
913-92	GENSET	150KW	N150	MAXE	2013
913-93	GENSET	150KW	N150	MAXE	2013
913-94	GENSET	20KW	N20	CAT	2013
913-95	GENSET	20KW			2013
914-00	SCREEN	4"X14' STATIONARY		CEDARAPIDS	
915-00	HYDRASCREEN	PORTABLE	1/2X1/8 50/30E	FINLEY	1979
916-00	TRANSFORMER		480 VOLT 3PHAS		
916-01	TRANSFORMER		480 VOLT 3PHAS		
916-02	TRANSFORMER		480 VOLT 3PHAS		
916-03	TRANSFORMER		480 VOLT 3PHAS		
916-04	TRANSFORMER		480 VOLT 3PHAS		
916-05	TRANSFORMER		480 VOLT 3PHAS		
917-01	CRUSHER	MCCLOSKEY S190 TD			
917-02	CRUSHER	MCCLOSKEY V80			
917-91	PORTABLE CONE CRUSHER	McCLOSKEY	C44	McCLOSKEY	
917-92	PORTAVLE JAAW CRUSHER	McCLOSKEY	J45	McCLOSKEY	
917-93	TRIPLE DECK SCREEN	McCLOSKEY	S190	McCLOSKEY	
917-94	IMPACT CRUSHER	PORTABLE	I54	McCLOSKEY	2017
918-01	STORAGE BIN	W/HOPPER8'X12'		SHOPMADE	1997
918-02	STORAGE BIN	W/HOPPER8'X12'		SHOPMADE	1997
918-91	TRIPLE DECK SCREEN	PORTABLE	S190	McCLOSKEY	2018
918-92	CONE CRUSHER	PORTABLE	C38	McCLOSKEY	2018
918-93	GENSET	210KW	XQ230	CAT	2018
919-00	PORTABLE CRUSHER		CS5260	KPI	2011
919-90	KLEEMANN CRUSHING PLANT		MR130ZSI	KLEEMANN	2019
921-02	WELDER		BIG 40G	MILLER	1992
922-01	POWER UNIT		D3406TA	CAT	
924-00	IMPACT CRUSHER		2500 DCVH	PIONEER	2005
926-00	CONTROL VAN	F/ SECOND CRUSHER	FSZ9F2-45-CST		
929-00	DECK SCREEN	5X16	TSH5163-26	CEDARAPIDS	
931-00	PRIMARY CONTROL TOWER	F/ CRUSHER	TS29-F2-45CST	EL RUSS	
932-03	ICEMAKER	W/ BIN		IOM	2005
932-04	ICEMAKER	W/ BIN	B970		2009
934-00	ROCKER CRUSHER		1500	EXCELL	1997
934-01	LATTICE FRAMER CONVEYOR		24'" X 120'	SHOPMADE	2003
935-01	SCREENING PLANT	PORTABLE	GT5162i	JCI	2011
937-00	3-DECK SCREEN		6 X 20	JCI	
937-02	3 DECK SCREEN		JCI7203LPPM	JCI	

938-00	CRUSHING PLANT	PORTABLE	COBRA 1200	CEDARAPIDS	2006
939-00	SCREENING PLANT DECK	5X12	2512 KT TRACK	ASTEC	
940-00	Portable Screen Plant		GT51621i	JCI	2010
945-00	CRUSHER SCREEN		I8203-32	EL JAY	1994
947-01	DOUBLE DECK SCREEN	6X18	2618VM(PTSC)	ASTEC	2009
949-01	SCREEN	EXTEC S-5	DEUTZ 2012 100.4 HI	EZTEC	
950-00	SURGE BIN	W/ DISCHARGE CONVEYOR	CSF-60-4	CARTER	1977
951-00	SURGE BIN	W/ CONVEYOR	25 YD HOPPER W/ C(	TBC	
963-00	AIR COMPRESSOR		XP825WC	IR	1991
970-00	AIR COMPRESSOR		XP825	IR	1991
971-00	AIR COMPRESSOR	PORTABLE		IR	1994
972-00	DRILL		ECM350	IR	1993
973-00	DRILL	W/UL140 DRIFTER	W/O XTENDABOOM	CRAWLER	1991
974-00	DRILL		EM350		1990
981-01	90KW GENSET TRAILER MOUNT	ASSIGNED TO 770-00	90 KW	CAT	2011
982-01	GEN SET CAT D3512	GEN SET		CAT	1985
983-00	GEN SET		DIESEL 230 KW	ONAN	2003
983-01	100KW GENSET	TRAILER MOUNTED	100KW	CAT	2012
983-02	150KW GENSET	TRAILER MOUNTED	150KW	CAT	2010
983-03	150KW GENSET	TRAILER MOUNTED	150KW	CAT	
983-04	150KW GENSET	TRAILER MOUNTED	150KW	IVECO	2015
983-05	150KW GENSET		150KW	CAT	
983-70	80KW GENSET	TRAILER MOUNTED	80KW	CAT	2012
983-90	40KW GENSET		40KW	CAT	2018
984-00	GEN SET 3412	MOUNTED	320KW	CAT	1993
986-00	GEN SET		DIESEL 230 KW	ONAN	2005
987-00	GENERATOR		50-59 50 KW	KVA	2003
990-00	GEN SET	DEER LEASE		CUMMINS	2007
994-00	GEN SET		3408 300HP	CAT	1978
994-70	MOBILE OFFICE	LAB		ACTON	1994
995-00	POWER UNIT		3408 530 HP	CAT	1994
997-00	GENERATOR		SR-2	LISTER	1994
998-02	PICKUP		F250	FORD	2017
999-00	4X4 WATER PUMP		6-354	PERKINS	
999-14	CONVEYOR STACKABLE		30"X60'	KPI	2009
999-15	CONVEYOR STACKABLE		30"X60'	KPI	2009
999-16	CONVEYOR STACKABLE		30"X60'	KPI	2009
999-18	CONVEYOR SYSTEM		30"X60'	TBC	2007
999-19	CONVEYOR SYSTEM		30"X60'	TBC	2007
999-20	CONBEYOR SYSTEM		30"X60'	TBC	2007
999-21	CONVEYOR STACKABLE		30"X60'	KPI	2007
999-22	CONVEYOR STACKABLE		30"X60'	KPI	2007
999-23	CONVEYOR STACKABLE		30"X60'	KPI	2007
999-24	CONVEYOR STACKABLE		30"X60'	KPI	2007
999-25	CONVEYOR SYSTEM		30"X60'	TBC	2007
999-26	CONVEYOR FIELD		30"X40'	TBC	
999-27	CONVEYOR SYSTEM		30"X60'	TBC	2007
999-28	CONVEYOR SYSTEM		30"X60'	TBC	2007
999-29	CONVEYOR SYSTEM		30"X60'	TBC	2007
999-30	CONVEYOR SYSTEM		30"X60'	TBC	2007
999-31	CONVEYOR SYSTEM		30"X60'	TBC	2007

EQUIPMENT SCHEDULE

Bidder should list major equipment available and serviceable for use on this Work.

See attached

Portion of Work Bidder proposes to sublet, if any:

Seeding, electrical, striping, hauling

Dated this 17th day of July, 2024.

By _____

Title General Manager

CONTRACT ASSURANCE

Contractor will ensure the following clause is placed in every DOT-assisted contract and subcontract:

Contractor or subcontractor shall not discriminate based on race, color, national origin, or sex in performance of this Contract. Contractor shall carry out applicable requirements of 49 CFR Part 26 in award and administration of DOT-assisted contracts. Failure by Contractor to carry out requirements is a material breach of this Contract which may result in termination of this Contract or such other remedy as recipient deems appropriate. This may include, but is not limited to:

1. Withholding monthly progress payments;
2. Assessing sanctions;
3. Liquidated damages; and/or
4. Disqualifying Contractor from future bidding as non-responsible.

PROMPT PAYMENT

Prime Contractor agrees to pay each subcontractor under this Prime Contract for satisfactory performance of contract no later than 30 working days from receipt of each payment Prime Contractor receives from the City of Midland. Prime Contractor agrees further to return retainage payments to each subcontractor within 30 working days after subcontractor's work is satisfactorily completed. Any delay or postponement of payment from above referenced time frame may occur only for good cause following written approval of the City of Midland. The clause applies to both DBE and non-DBE subcontractors.

For purposes of this Section, a subcontractor's work is satisfactorily completed when all tasks called for in subcontract have been accomplished and documented as required by the City of Midland. When the City of Midland makes an incremental acceptance of a portion of a prime contract, work of a subcontractor covered by that acceptance is deemed satisfactorily completed.

Contractor will not be reimbursed for work performed by subcontractors unless and until Contractor ensures subcontractors are promptly paid for work they have performed.

Contractor failure to comply with requirements of DBE Plan shall constitute a material breach of this Contract. In such a case, the City of Midland reserves the right to terminate Contract; to deduct amount of DBE goal not accomplished by DBE from money due or to become due Contractor, not as a penalty but as liquidated damages to the City of Midland or such other remedy/remedies as the City of Midland deems appropriate.

CITY OF MIDLAND DEPARTMENT OF AIRPORTS
DBE POLICY STATEMENT

Section 26.1, 26.23 Objectives/Policy Statement

The City of Midland, Owner and Operator of Midland International Air & Space Port, herein referred to as MAF, established a Disadvantaged Business Enterprise (DBE) program in accordance with regulations of the U.S. Department of Transportation (DOT), 49 CFR Part 26. MAF received Federal financial assistance from the Department of Transportation and as a condition of receiving this assistance, MAF signed an assurance to comply with 49 CFR Part 26.

It is the MAF policy to ensure DBEs, as defined in Part 26, have an equal opportunity to receive and participate in DOT-assisted contracts. It is also our policy to:

1. ensure nondiscrimination in award and administration of DOT-assisted contracts;
2. create a level playing field on which DBEs can compete fairly for DOT-assisted contracts;
3. ensure DBE Program is narrowly tailored in accordance with applicable law;
4. ensure only firms who fully meet 49 CFR Part 26 eligibility standards are permitted to participate as DBEs;
5. help remove barriers to participation of DBEs in DOT-assisted contracts; and
6. assist development of firms that can successfully compete in the marketplace outside the DBE program.

An MAF staff person has been delegated as the DBE Liaison Officer. In that capacity, appointed staff is responsible for implementing all DBE program aspects. Implementation of the DBE program is accorded the same priority as compliance with all other legal obligations incurred by MAF in financial assistance agreements with the Department of Transportation.

MAF disseminated this policy statement to the City Council of the City of Midland, Texas and all components of the organization. We distributed this statement to DBE and non-DBE business communities who perform work for us on DOT-assisted contracts. This is accomplished via inclusion in all our Bid Documents.

Justine Ruff, Director of Airports

Section 26.37Monitoring Responsibilities

MONITORING PAYMENTS TO DBEs AND NON-DBEs

MAF undertakes ongoing monitoring of prime payments to subcontractors over the course of any covered contract. Such monitoring activities will be accomplished as follows:

1. Prime Contractors must submit monthly proof of prompt payment to Airport.
2. DBELO will monitor prompt payment to subcontractors via review of cancelled checks and/or accounts payable ledgers submitted with monthly reports.
3. DBELO will verify checks payable to subcontractors are dated within prompt payment period.
4. DBELO may also contact DBE subcontractors by phone/email to confirm receipt of payment within prompt payment period.

Airport requires prime contractors to maintain records/documents of payment to subcontractors, including DBEs, for a minimum of three years unless otherwise provided by applicable record retention requirements for Airport financial assistance agreement, whichever is longer. These records will be made available for inspection upon request by any authorized representative of the MAF or DOT. This reporting requirement extends to all DBE and non-DBE subcontractors.

INFORMATION TO BE SUBMITTED (26.53(B)):

MAF treats Bidder/Offeror compliance with good faith effort requirements as a matter of responsiveness.

Requirements of 49 CFR Part 26, Regulations of the U.S. Department of Transportation, apply to this Contract. It is MAF policy to practice nondiscrimination based on race, color, sex, or national origin in award or performance of this Contract. All firms qualifying under this solicitation are encouraged to submit Bids/Proposals. Award of this Contract will be conditioned upon satisfying Bid Specification requirements applying to all Bidders/Offerors, including those who qualify as a DBE. A DBE Contract goal of 9.8 percent has been established for this Contract. Bidder/Offeror shall make good faith efforts, as defined in Appendix A, 49 CFR Part 26, to meet the Contract goal for DBE participation in performance of this Contract.

Types of actions to support good faith efforts at meeting Contract goal for DBE participation (not intended as an all-inclusive list and other methods by Bidder may be relevant in documenting good faith effort:

1. Have DBE subcontractors attend Prebid Meeting
2. Documentation of notices sent to potential DBE subcontractors requesting interest in bidding.
3. Documentation of emails sent to potential DBE subcontractors requesting interest in bidding.
4. Documentation (dates and times) of phone calls made to potential DBE subcontractors informing them of the Project and soliciting an interest in bidding. This should include follow-up calls to support aggressively attempting to obtain DBE participation.

Good faith effort documentation must be included with Proposal submitted.

TO INCLUDE WITH PROPOSAL:

Bidder/Offeror shall include with their proposal:

1. Form 1: Disadvantaged Business Enterprise (DBE) Utilization, (signed by Bidder/Offeror);
2. Form 2: Letter of Intent (for each DBE firm). Note: *DBE firm signature not required at time of proposal submission*; and
3. Completed Bidder Information Sheet.

UPON AWARD OF CONTRACT:

Successful Bidder/Offeror will be required to submit the following information within 5 days of Bid Opening:

(1) names and addresses of DBE firms who will participate in the Contract;
(2) description of work each DBE firm will perform;
(3) dollar amount of participation for each DBE firm participating;
(4) written documentation of Bidder/Offeror commitment to use a DBE subcontractor whose participation meets Contract goal;
(5) written confirmation from DBE of Contract participation as provided in commitment made under (4); and
(6) upon unmet Contract goal, evidence of good faith efforts. Successful Bidder/Offeror must submit DBE written confirmation of participation within five days after Bid Opening.

Midland International Air & Space Port

To all Bidders for AIP-funded projects for Midland International Air & Space Port (MAF):

Any company desiring to submit a bid on an AIP grant project for MAF, must complete a Bidder Information Sheet that includes:

- Name of Firm;
- Address of Firm;
- Age of Firm;
- If Firm is a certified Disadvantaged Business Enterprise (DBE); and
- Amount of annual gross receipts.

Before Contract is awarded, companies must also submit Demonstration of Good Faith Efforts, Form 1: DBE Utilization, and Form 2: Letter of Intent for each DBE subcontractor. If DBE goal percentage is met, complete one Form 1 and a separate Form 2 for each DBE subcontractor. If not met, complete Form 1 and submit documentation of Good Faith Efforts (see 49 CFR Part 26, Appendix A) to support percentage accomplished.

Upon Airport acceptance of bid, submit the following information to MAF Disadvantage Business Enterprises Liaison Officer (DBELO) before Project starts:

- Commitments made to all subcontractors (DBE/non-DBE): MAF Form 2: Letter of Intent or TxDOT Form 4901; and
- Proof of DBE certification of all DBE subcontractors.

Once Project starts, submit monthly to the DBELO a Monthly Progress Report (MAF form or TxDOT Forms 4903 or 4904) of actual dollar amount paid to DBE subcontractors.

Call 432.560.2200 for questions. Thank you for your time and consideration regarding this matter.

Sincerely,

MAF, Liaison Officer
Disadvantage Business Enterprise

Encl

FORMS 1 AND 2: DEMONSTRATION OF GOOD FAITH EFFORTS

Form 1: Disadvantaged Business Enterprise (DBE) Utilization

Undersigned Bidder/Offeror has satisfied bid specification requirements as follows:

☐ Bidder/Offeror met DBE contract goal:

Bidder/Offeror is committed to a minimum of 9.8% DBE utilization on this contract.

☒ Bidder/Offeror has not met DBE contract goal:

Bidder/Offeror is committed to a minimum of 3.5 % DBE utilization on this contract and submitted documentation demonstrating good faith efforts.

Legal name of Bidder/Offeror's firm: Jones Bros. Dirt & Paving Contractors Inc

Bidder/Offeror Representative: Stacey Bryant

Name/Title: Stacey Bryant General Manager

Signature

7/17/2024
Date

HEARST | COMMUNITY MEDIA GROUP

Midland Reporter-Telegram

ORDER CONFIRMATION

Today's Date:	7/8/2024
P.O. Number:	
Description:	Midland Int. Air & Space Port, Runway Blast Pads Improvements
Campaign Id:	11013708
Sales Rep:	kevin.scannell@hearstnp.com

Bill To

JONES BROTHERS DIRT & PAVING
1401 S Grandview Ave
ODESSA, TX 79761
Tel: 432 332-0721
Account Id: 21002802

Advertiser

JONES BROTHERS DIRT & PAVING
1401 S Grandview Ave
ODESSA, TX 79761
Tel: 432 332-0721
Account Id: 21002802

Additional Details

Order Contact Name:

Comments:

Cost Summary

Gross Amount:	$ 435.96
Agency Commission:	$ 0.00
Net Amount:	$ 435.96
Sales Tax:	$ 0.00
Order Total:	**$ 435.96**

Prepayment Details

Pre-Payment Amount	Pre-Payment Date	Pre-Payment Card

No Pre-Payments on this order

Print

Product	Section / Position / Classified Category	Start	End	Color	Ad Size(s)
Midland Reporter Online	Section Placeholder Any Legals	7/10/2024	7/17/2024		
Midland Reporter-Telegram	Section Placeholder Any Legals	7/10/2024	7/10/2024		6.706 Agate Lines by 3 Column(s)
Midland Reporter-Telegram	Section Placeholder Any Legals	7/11/2024	7/11/2024		6.706 Agate Lines by 3 Column(s)
Midland Reporter-Telegram	Section Placeholder Any Legals	7/12/2024	7/12/2024		6.706 Agate Lines by 3 Column(s)
Midland Reporter-Telegram	Section Placeholder Any Legals	7/13/2024	7/13/2024		6.706 Agate Lines by 3 Column(s)
Midland Reporter-Telegram	Section Placeholder Any Legals	7/16/2024	7/16/2024		6.706 Agate Lines by 3 Column(s)
Midland Reporter-Telegram	Section Placeholder Any Legals	7/17/2024	7/17/2024		6.706 Agate Lines by 3 Column(s)

Content shown below may not be actual size and is scaled for proofing.

LEGAL NOTICE

Jones Bros. Dirt & Paving Contractors, Inc. will be soliciting qualified DBE (Disadvantaged Business Enterprise) contractor quotations until July 17th @ :00am for Midland International Air & Space Port, Runway Blast Pads Improvements. Quotes may be submitted via fax (432)332-0724, emailed to estimating@jonesdp.com or in person at 1401 S. Grandview Odessa, Texas 79761.

Midland International Air & Space Port
Disadvantaged Business Enterprise (DBE) Program

Form 2: Letter of Intent

Note: Authorized representative (AR) named herein must be a vested individual with authority to make contracting decisions on behalf of the firm.

Name of Bidder/Offeror's firm: Jones Bros Dirt & Paving Contractors Inc
Name/title of firm's AR: Stacey Bryant
Phone: 432 332 0771 Email: S.bryant@jonesdp.com
Name of DBE firm: R.E.B.D. Trucking
Name/title of DBE firm's AR: Romeo Trevino Jr.
Address: 1219 N. Grant
City: Odessa State: TX Zip: 79761
Phone: 432 557 1212 Email:
Work to be performed by DBE firm: Hauling

Description of Work	NAICS	Dollar Amount/%*	Dealer/Manufacturer**
Haul of Material	434	30,000 3.5%	

**Percentage to be used only in negotiated procurements, including design-build contracts.*
***For material suppliers only, indicate if DBE is a manufacturer or regular dealer as defined by §26.55.*

Undersigned Bidder/Offeror is committed to utilizing the named DBE firm for work described herein. Total expected dollar value of this work is $ 30,000.
Bidder/Offeror understands if awarded contract/agreement resulting from this procurement, it must enter a subcontract with identified DBE firm representative of listed type and amount of work. Bidder/Offeror understands upon submitting this form with bid/offer, it may not substitute/terminate listed DBE without following procedures of 49 CFR Part 26, §26.53.

Signature of Bidder/Offeror's Authorized Representative — Date: 7/17/2024

Undersigned DBE affirms it is ready, willing, and able to perform amount and type of work as described herein and is properly certified to be counted for DBE participation, therefore.

Signature of DBE's Authorized Representative — Date: 7/16/24

If Bidder/Offeror does not receive award of prime contract, all representations in this Letter of Intent shall be null and void.

Submit this page for each DBE subcontractor.

Midland International Air & Space Port

Department of Airports

BIDDER INFORMATION SHEET

Firm Name: Jones Bros. Dirt & Paving Contractors Inc.

Address: 1401 S. Grandview
Odessa, Texas 79761

Age of Firm: 72

Is your Firm a Certified Disadvantaged Business Enterprise (DBE)? YES ☐
NO ☒

Mark the category of your Firm's Annual Gross Receipts.

- ☐ Less than $1 million.
- ☐ More than $1 million, less than $5 million.
- ☐ More than $5 million, less than $10 million.
- ☐ More than $10 million, less than $15 million.
- ☒ More than $15 million.

DBE/NON-DBE MONTHLY PROGRESS REPORT FOR MAF

Project: _____ AIP Grant No.: _____

Contractor: _____ Contract Amount: _____

DBE Goal: _____ DBE Goal Dollars: _____

Contractor DBE Status (DBE/non-DBE): _____ Reporting Month: (Month/Year): _____

Vendor Number	Name of Prime/Subcontractor DBE or Non-DBE	*D/N	**Disadvantaged Group	Type of Work	***Total $ Amt Paid for Work Performed (Prime & Sub; DBE & Non-DBE)	**** $ Amt Paid to Non-DBE Firm this Pay Period	***** $ Amt Paid to DBE Firm this Pay Period

* All payments to DBE and Non-DBE firms are required to be reported (D=DBE; N=non-DBE).

** If firm is a DBE, report Disadvantaged Group the DBE firm falls under: BA=Black American; HA=Hispanic American; NA=Native American; SAA=Subcont. Asian American; APA=Asian Pacific American; NMW=Non-Minority Women; O=Other.

*** Goal/commitment progress report amount and/or race-neutral amount. Do not subtract non-DBE/second-tier subcontractors and haulers from this column.

**** Report amount paid to non-DBE firm or sub.

***** Report amount paid to DBE firm or sub.

If using a non-DBE hauling firm that leases from DBE truck owner-operators, payments made to each owner-operator must be reported separately. Report amount of payment DBE subcontractors paid to non-DBE subcontractors/haulers.

Submission of this report for periods of negative DBE activity is required. This report is required monthly until entirety of project specified is completed.

I hereby certify the above is a true and correct statement of amounts paid to the DBE or Non-DBE firms listed above.

Signature: _____ Date: _____

Company Official

🛠**This report must be submitted with monthly request for payment.**

SPECIAL PROVISIONS

SP-1 SCOPE OF WORK

Work to be accomplished under these Specifications including plans shall consist of:

1.1 Principal items of Work are set forth in specific detail in the proposal section of these Specifications; however, Work may be generally described as repaving and reconfiguring three runway blast pads areas.

1.2 Work at RWY 10 will also include rerouting certain FAA power cables that serve the FAA threshold light bar. The power cables exist in a Direct Earth Bury (DEB) state and will be replaced by a new route in conduit in order to remove this power feed from underneath the new north shoulder paving. This Work will also include other nearby appurtenant work regarding the FAA Approach Light System per the Project plans.

1.3 Work will also include other miscellaneous materials, equipment, machinery, superintendence, and labor for constructing these improvements for the Midland International Air & Space Port (MAF), Midland, Texas.

1.4 Contractor shall furnish all labor, materials, and equipment necessary to complete Work called for in these Specifications and shown on the Plans.

1.5 Payment for various items of Work will be made as specified under various payment articles of Technical Sections.

SP-2 CONTRACT DOCUMENTS

All Work covered by this Contract shall be done in accordance with Contract Documents described in the General Conditions. Drawings included in documents consist of the plans entitled “Runway Blast Pads Improvements,” dated June 2024.

Bidders shall be thoroughly familiar with all Drawings and Specifications. Contractor shall be responsible for satisfactory completion of all Work shown on Drawings or specified.

Intent of Plans and Specifications is to prescribe a complete Work or improvement which Contractor undertakes to do in full compliance with Plans, Specifications, Special Provisions, Proposal, and Contract. Contractor shall do all Work including such additional, extra, and incidental Work considered necessary to complete the Project in a satisfactory and acceptable manner, as provided in Plans, Proposal, and Contract. Unless otherwise provided in Specifications, Special Provisions, or Contract, Contractor shall furnish all materials, equipment, tools, labor, and incidentals necessary to prosecute completion of Work.

Contract Documents are complementary and that called for by any one entity shall be as binding as if called for by all. In case of conflict between Contract Documents, priority of interpretation shall be in the following order:

- Signed Contract,
- Performance Bond,
- Special Bonds (if any),
- Proposal,
- Special Provisions,
- Notice to Bidders,
- Instructions to Bidders,
- Technical Specifications,
- Plans,
- General Conditions of Contract, and
- General Contract Provisions.

SP-3 TIME AND ORDER OF COMPLETION

Contractor is permitted to prosecute certain portions of Work in order and manner of own choosing to the best interest of the Project; however, Work shall be conducted in such manner and with such materials, equipment, and labor as required to ensure completion in accordance with Plans and Specifications within time stated in Proposal and Contract. Contractor shall furnish Parkhill with proposed progress schedule and Parkhill shall approved schedule before Work is commenced on Project.

Within the 270 consecutive calendar day contract framework, the following time, location, and schedule constraints shall be included in the progress schedule preparation and Project execution:

Project work areas are within runway object free areas as well as approach and departure areas. Project work may not occur in these areas without complete prior coordination and agreement with MAF personnel regarding runway closure timing and duration. Per Construction Safety and Phasing Plan and the Phasing Plan sheets, major RWYs 10-28 and 16R-34L may be closed for an agreed-upon duration to allow construction in associated approach and departure areas. Only close one major runway at any one time. RWY 10-28 shall remain open during the winter and spring (December through April) to allow necessary ILS operations, and RWY 16R-34L shall remain open during the summer and fall (May through November) to utilize runway length in hot weather. The anticipated timing for work on RWY 10 is 120 consecutive calendar days, and 150 consecutive calendar days for RWY 16R-34L. Phase 1 will likely be RWY 16R-34L but will be coordinated at the preconstruction meeting. General Aviation (GA) RWY 4-22 may also be closed to allow construction given complete coordination with MAF personnel regarding runway closure timing and duration.

Contractor is reminded approved material submittals are required before incorporation of materials into this Project. To avoid delays in Work progress, provide complete information to Parkhill as early as possible for review and approval.

The timing for the Contractor to reroute the FAA electrical cables as part of the overall project work at RWY 10 will be finalized during the Preconstruction Conference. FAA representatives previously reviewed the Project plan sheets pertinent to the work. Contractor shall note the special coordination required regarding rerouting the electrical power to certain FAA facilities on RWY 10. Local FAA representatives will oversee and accomplish the pre-construction power shutdown of the RWY 10 MALSR approach light system. Contractor and FAA shall coordinate power lock-out procedures for the Project. Local FAA representatives will periodically be on-site to observe the Contractor's work for FAA compliance. Contractor's work scope focuses on rerouting the specific circuit that powers the RWY 10 FAA threshold bar lights. Contractor shall provide submittals for all items incorporated into the work for this FAA re-route. In addition to review by Parkhill, the submittals may be reviewed by FAA representatives to verify compliance with the plan product requirements. The plan sheets note certain testing requirements that will be accomplished by Contractor and monitored by local FAA representatives at appropriate times during construction. Separate from the work described above, the plans note that Contractor shall remove and preserve certain FAA threshold and approach lights to preserve these items during the paving construction. Contractor shall cover the light bases in a manner to prevent water intrusion. Contractor shall incorporate standard 811 utility locate provisions.

Contractor will be required to execute various portions of the Project in phases to maintain usage of airport facilities as well as safety during the entire Project. Contractor will be allowed to develop own phasing plan which will meet phasing intent shown on Plans. Contractor phasing plan will be subject to Parkhill approval.

Other Contractors may perform Work for Owner in the same general area as that covered under this Contract. Contractor shall be expected to coordinate his Work with Work of other Contractors as required to ensure all Work can be carried out with the least possible interference with operation of other contractors or Owner. Contractor coordination with other contractors shall require Parkhill approval. Owner reserves the right to control and direct sequence of operations in areas others will be working. Provision shall be made for other contractors to have suitable space to Work, store materials, as well as access to these areas.

Contractor shall schedule Work well in advance of actual operations and keep Parkhill advised of this schedule so close coordination can be maintained with Director of Airports and other contractors. Portions of taxiways and runways will be closed as required for proper execution of Work, but at least three days' notice will be required before closing any portion of a taxiway or runway. Director of Airports will file Notice to Airmen (NOTAMs) required for various construction operations.

When closing portions of airfield for construction, keep time closed to a minimum. Contractor is required to provide, install, and maintain approved closed runway/taxiway markings in accordance with the latest FAA Advisory Circular 150/5370 and other applicable FAA regulations. No separate measurement or payment shall be made for closed runway or taxiway marking. Coordinate all operations through Parkhill and Director of Airports.

SP-4 LIMITATION OF OPERATION

Complete each item of Work without delay. In no instance shall Contractor be permitted to transfer forces from uncompleted Work to new Work without Parkhill permission. Contractor is required to submit a schedule of operations to Parkhill for approval. Contractor shall not commence new Work to the prejudice of Work already started.

Contractor shall take all necessary precautions to ensure operating aircraft and passenger safety as well as that of Contractor equipment and personnel. Give special considerations to flight schedules and routes taken by equipment traveling within Airport area. Contractor shall provide all such equipment with a flag on a staff attached to equipment, so flag is readily visible. Flag shall be not less than 3 feet square, checkered pattern of international orange-and-white squares, not less than 1 foot on each side. Contractor shall estimate all difficulties to be encountered. Keep equipment not actually in operation clear of landing areas. Personnel shall not enter areas of Airport where aircraft are operating without specific permission.

Nighttime construction activities are not permitted without prior approval of Parkhill and Director of Airports. If required and permitted, nighttime construction activities shall be as noted on Plans and coordinated, through Parkhill, with Director of Airports. During nighttime construction, Contractor shall provide all equipment traveling within Airport area with a flashing light that is always visible and operational.

Coordinate all operations through Parkhill and Director of Airports, so no interference with aircraft traffic on active runways, taxiways, or aprons will result from Contractor operations. Construction activities are not allowed within safety areas of any active runway/taxiway unless approved by Parkhill and Director of Airports.

- Taxiway safety area is the area within 90 feet of the centerline of any taxiway/taxilane.
- Runway safety area is the area within 250 feet of the centerline of any runway when aircraft are operating under Visual Flight Rule (VFR, clear weather) conditions, or within 570 feet of the centerline of any runway when aircraft are operating under Instrument Flight Rule (IFR, inclement weather) conditions.

As required, Contractor shall maintain flagpersons to direct construction traffic to cross or travel along any active taxiway, apron, or runway. Direct traffic away from these facilities when possible and never allow traffic to cross an active runway, taxiway, or apron without proper clearance.

Contractor shall schedule Work well in advance of actual operations and keep Parkhill advised of this schedule so close coordination can be maintained with Director of Airports. Aprons, runways, and taxiways will be closed as required for proper execution of Work as provided in previous Articles.

Contractor shall exert every effort to maintain safety of aircraft traffic and be acquainted with rules and regulations concerning aircraft traffic safety. Maintain FAA Advisory Circular 150/5370-2G, "Operational Safety on Airports during Construction," requirements. Violations of safety rules by Contractor workers shall result in discharge of such workers in accordance with General Conditions. Continued violations of safety rules and regulations by Contractor, after Parkhill or MAF notify Contractor of such violations, shall constitute grounds for suspending Contractor operations until steps are taken to insure a safe operation.

Contractor's field office and material storage area may be located inside secure area of Airport but outside safety areas of taxiways/runways near construction. Contractor shall provide an area for parking all equipment not used for construction purposes, as well as for parking employee vehicles. This area shall be located away from the Airport operational area (AOA) in an area approved by Parkhill and Director of Airports. No employee or other unauthorized vehicles will be allowed within the AOA. If Contractor needs field office outside of secure area, Contractor can install temporary security fencing around office site. Airport must approve security fence.

Contractor shall utilize existing vehicle gates for employees and subcontractors. Contractor shall be responsible for allowing only authorized personnel to enter the AOA through this gate. Contractor shall always control entrance through the gate by employees or subcontractors entering/exiting the gate.

Hauling routes shall not be along/across any paved airport street, road, apron, taxiway, or runway without specific written authorization from Parkhill and Director of Airports. Any damage incurred by Contractor equipment shall be repaired by and at Contractor expense and as required by Parkhill and Director of Airports.

Contractor shall maintain pavement surfaces of runways, taxiways, and aprons, allowed to be used as hauling routes, in a clean condition, suitable for use by aircraft, as determined by Director of Airports.

Successful Bidder is subject to a pre-award review by Office of Compliance and Security, Equal Opportunity Division, Federal Aviation Administration, to determine Contractor's previous compliance status.

Contractor is subject to a preconstruction conference to discuss phasing and Project safety control after award of Contract.

SP-5 CONSTRUCTION ACTIVITY

When construction activity is performed on/adjacent to AOA, the following rules and regulations apply unless otherwise authorized by Airport Operations. **Contractor must have all picture-badged supervisors fingerprinted. Fingerprinting cost is $70.00 per person, paid by Contractor**.

5-1 AOA Badge: At least one supervisor with an AOA picture badge must always be present with any group of unbadged personnel.

5-2 Escorts: All escorts performed by Contractor within AOA must be accomplished by picture-badged personnel operating a vehicle marked by a 3- x 3-foot orange-and-white

checkered flag. Traffic must always adhere to haul routes (see Subarticle 5-3). Only authorized airport personnel are to perform escorts off established haul routes.

5-3 Haul Routes: Establishment of AOA haul routes must be authorized through Airport Operations. Contractor shall furnish, erect, maintain, and remove flags for delineation of haul routes. Criteria of establishing perimeter of a haul route and restricted areas will be as follows:

A. Green flags will prominently mark either side of haul route at intervals to easily define route.
B. Yellow flags will prominently mark a boundary 500 feet adjacent to a runway centerline to delineate restricted areas during poor visibility as determined by Airport Operations.
C. Red flags will prominently mark a boundary 250 feet adjacent to a runway centerline to indicate entry is prohibited unless specifically authorized by Airport Operations.
D. Haul Routes that cross/come within 153 feet of a taxiway must have a flagperson present to control vehicular traffic.
E. No haul route may come within 1,000 feet from end of a runway unless specifically authorized by Airport Operations.

5-4 Cranes: Any construction activity utilizing a crane or other hoisting device shall have prior written approval of FAA. Contractor shall be responsible for filing prescribed forms for airspace clearance in accordance with Part 77 of Federal Aviation Regulations. Applications for airspace clearance must be submitted at least 30 days before construction activities. To avoid construction delays, Contractor is urged to timely file prescribed forms. Airspace clearance from FAA must be approved before erection of crane or other hoisting device. The following information is required:

A. Location of equipment.
B. Maximum extendable height.
C. Duration of use.
D. Daily hours of operation.

Top of crane must be marked by a 3- x 3-foot orange-and-white checkered flag and lowered at night and during periods of poor visibility as directed by Airport Operations. Cranes which exceed a height of 149 feet must be approved in writing by the FAA (FAA Form 7460-1). Contractor shall notify Parkhill at least 48 hours before erecting crane.

5-5 Restricted Areas: Construction prohibited in these areas unless authorized by Airport Operations:

A. Within 90 feet of a taxiway or apron taxiway centerline.
B. Within 250 feet parallel to runway centerline. (500 feet during poor visibility as determined by Airport Operations.)
C. Within 1,000 feet of end of the runway.
D. Within certain areas about runway to cause interference with navigational equipment.

5-6 Trenches and Excavations: No trenches or excavations allowed within these areas:

A. Within 250 feet parallel to runway centerline.
B. Within 90 feet parallel to taxiway or apron taxiway centerline.
C. Within 1,000 feet of end of runway.

EXCEPTION: Authorization considered on a case-by-case basis by Airport Operations.

5-7 Stockpiles of Material: No stockpiled material allowed within these areas:

A. Within 500 feet parallel to runway centerline.
B. Within 90 feet parallel to taxiway or apron taxiway centerline.
C. Within 1,000 feet of end of runway.

EXCEPTION: Authorization considered on a case-by-case basis by Airport Operations.

5-8 Escorts, Badges, and Permits: When construction activity is performed on/adjacent to AOA and access onto apron required, the following rules will apply unless otherwise authorized by Airport Operations:

A. Escorts: Airport Operations must escort Contractor vehicles and equipment. Contractor must observe all rules and regulations.

EXCEPTION: Vehicles displaying a Permanent AOA Access decal do not require an escort while operating on ramps.

B. AOA Badges: Contractor personnel will display AOA Identification Badge.

C. AOA Access Permit: Contractor vehicles will display AOA Access Permit or Temporary AOA Access Permit.

EXCEPTION: Construction equipment (tractors, dump trucks, cranes, etc.) are not required to display an AOA Access Permit.

5-9 Protection of Airfield Areas: Utilize these procedures to prevent inadvertent entry by aircraft or vehicles into closed sections of taxiways, runways, or aprons. Contractor shall provide all materials and labor to furnish, erect, maintain, and remove these items as subsidiary to other items in Project.

A. When any taxiway or other AOA is closed, area will be protected by cones and flashing lights set up at entrances to closed areas.

B. Appropriate NOTAMs will be issued on closure and associated maintenance or construction activity.

C. Centerline and edge lights will be turned off, removed, obliterated, or disconnected as dictated by circumstances requiring closure.

D. All excavations in existing pavement areas (e.g. mudjacking repairs) must have hole protected by cones and flashing lights, in addition to cones and lights marking closed area.

E. Major excavations (constructing new taxiways, ramps, other construction activity) or major repairs of existing taxiway/runway will be protected by 10-inch-wide by 8-foot-long plastic, FAA-approved barricades (striped orange and white) with at least two red-flashing lights on top of each barricade.

F. In some cases, taxiway centerline striping will be obliterated, and a temporary displaced centerline provided.

G. All airfield activities must be continually coordinated through Airport Operations Supervisor.

SP-6 AFFIDAVIT OF BILLS PAID

Before Owner's final acceptance of this Project, Contractor shall execute an affidavit that all bills for labor, materials, and incidentals incurred in construction of these improvements, are paid in full, including any retainage, and no claims are pending, of which Contractor is notified.

SP-7 CALENDAR DAY

Time for Project completion and liquidated damages shall be in accordance with provisions of General Conditions, Article GC-32 - Time for Completion and Liquidated Damages. A calendar day is every day shown on the calendar.

SP-8 PROTECTION OF PROPERTY

Contractor shall exercise care to prevent damage to all structures, above or below ground, including buildings, fences, pipelines, utilities, roads, etc., publicly or privately owned, and including Work performed by others. Contractor is responsible for locating all underground facilities damaged by proposed construction.

Contractor shall be responsible for all damage done to either public or private property during construction except as specifically provided otherwise in these Specifications.

Known existing underground utilities and structures are shown on Plans. Locations are believed reasonably accurate but not guaranteed.

Contractor shall take all steps necessary to protect existing facilities during construction to assure continuous operation of lights for runways and taxiways which will be open for night operations.

SP-9 ELECTRIC POWER AND NATURAL GAS

Contractor shall provide electrical, natural gas, and other fuel requirements and pay for electricity, gas, or fuel consumed during Project construction. Contractor shall construct own service lines and such construction shall be in strict accordance with all applicable codes and laws.

SP-10 LINES AND GRADES

Parkhill will provide Contractor with horizontal control points and a benchmark for vertical control for each of the three work areas. References to lines and grades as established by Parkhill shall reference these control points. Contractor will be responsible for laying out Work and shall do all construction staking. Parkhill will check Contractor's grade control and major layouts at Parkhill's discretion, but this check will not relieve Contractor of responsibility of correctly locating line and grade in accordance with Plans and Specifications.

Parkhill will take all measurements necessary to determine amount of Work performed under various items payment is provided. When necessary, Work will be suspended to permit this Work, but such suspension will be as brief as practicable, and Contractor shall be allowed no extra compensation.

Contractor shall be certain as to accuracy of all measurements before constructing any permanent structure and not take advantage of any errors made in laying out Work. Contractor shall scrupulously preserve such stakes/markings as Parkhill may set for either Parkhill or Contractor guidance. In case of Contractor or employee negligence resulting in destruction of such stakes/markings, an amount equal to the cost of replacing same may be deducted from subsequent estimates due Contractor, at Parkhill discretion.

SP-11 WATER FOR CONSTRUCTION

Contractor shall provide for water requirements and pay for all water consumed during Project construction. Contractor shall arrange and pay for connections to existing water mains, fire hydrants, and piping/hauling water to the point where water is required.

SP-12 MATERIAL TESTS

Specifications require various tests on construction materials. In general, Contractor shall bear the cost of all material tests required before approval of material, source, or mix design. City will bear the cost of all passing commercial laboratory tests required for acceptance during construction of improvements and Contractor shall bear the cost of all failing construction tests.

Where only small amounts of material are used or where compliance with Specifications determined by visual inspection, no tests are required. Certificates of compliance required on all materials not tested.

All materials proposed used may be tested any time during preparation and use. If, after trial, sources of supply approved do not furnish a product of uniform quality or product from any source proves unacceptable any time, Contractor shall furnish approved material from another source.

SP-13 BARRICADES, SIGNS, AND HAZARD MARKINGS

Contractor shall provide, erect, and maintain all necessary barricades, signs, danger signals, and lights for protection of Work and the safety of the public for passengers and aircraft. Before closing existing apron, runways, or taxiways, place warning signs for air traffic at such locations, visible day and night. Any movement of Contractor vehicles or equipment on/across aprons or taxiways shall carry FAA standard markings or flags. Movement of other vehicles responsible to Contractor shall be under escort, as specified in Article SP-5-2.

Barricades for runways, taxiways, and aprons closed to traffic shall consist of 10-inch-wide by 8-foot-long plastic, FAA-approved barricades. Each barricade shall have reflective striping and a red flashing light on each end. Barricades shall be spaced with no more than 10-foot clearance between flashing lights attached to successive barricades. Obstructions shall be illuminated at night. Proper illumination of obstructions is critical to safe operation of aircraft on the Airport. All warning lights shall be equipped with photocell controls to automatically turn on lights at night and off at daytime. Contractor shall check lights daily (and each night) to assure batteries/power cells are working. Immediately replace or repair any lights found out-of-order, flashing weakly, or in otherwise less than acceptable operating condition. Parkhill may suspend Work on Project if Contractor's warning lights are not maintained. A $25.00/day charge will be assessed Contractor for each light found inoperative by Owner's personnel or representatives.

SP-14 PREVENTION OF AIR AND WATER POLLUTION

Contractor shall use suitable precaution to minimize air and water pollution during Work progress. Contractor shall meet all EPA requirements concerning air and water pollution. Contractor shall implement a Stormwater Pollution Prevention Plan (SWPPP) as required by Plans and Specifications.

SP-15 PUBLIC CONVENIENCE AND SAFETY

Materials stored on the Airport shall be placed and Work always conducted to cause no greater obstruction to air and ground traffic than Parkhill consider necessary. In protecting operational areas, minimum clearances maintained for runways shall agree with Part 77 of Federal Aviation Regulations. During Project construction, Contractor shall also maintain operational safety on Airport in accordance with the FAA Advisory Circular 150/5370-2G, "Operational Safety on Airports during Construction" and SW5200.5B, "Airport Safety during FAA-funded Airport Construction and FAA Facilities Maintenance." No runway, taxiway, apron, or roadway shall be closed or opened except by express permission from Parkhill and Director of Airports.

Contractor shall be responsible for maintaining pavement free of all rocks, gravel, dirt, and other debris where hauling is permitted on/across any active roadway, apron, runway, taxiway, or areas temporarily closed subject to opening on short notice. Contractor shall immediately remove all rocks, gravel, dirt, or other debris.

SP-16 FINAL CLEANING

As each intermediate phase of Work is completed and before opening any portion of any airfield apron, roadway, runway, or taxiway, Contractor shall be responsible for cleaning construction site and adjacent pavement as specified.

Upon completion of Work and before acceptance and final payment is made, Contractor shall remove from the site all machinery, equipment, surplus and discarded materials, rubbish, and temporary structures. Material cleared from site and deposited on adjacent property will not be considered satisfactorily disposed. Cleanup cost shall be included as a part of cost of various items of Work involved with no direct compensation made for this Work.

SP-17 INSURANCE

Contractor shall not begin Work under this Contract until all insurance is obtained as required in General Conditions of Contract, proof of same is furnished to Owner, and Owner approves. All insurance required for this Project shall name the City of Midland and Parkhill as additional insureds.

Contractor shall obtain and deliver to Owner, an Owner's Protective or Contingent Public Liability Insurance Policy naming the City of Midland and Parkhill as additional insureds and amount of policy shall be as follows:

- $1,000,000 for injuries, including accidental death, to one or more persons and subject to noted limit for each person;
- $1,000,000 total limit for all damages arising out of bodily injuries to or death of two or more persons in any one accident;
- limit not less than $1,000,000 for all damages arising out of injury to or destruction of property in any one accident, and subject to that limit per accident; and
- $2,000,000 total (or aggregate) limit for all damages arising out of injury to or destruction of property during policy period.

Before Work on any Contract or subcontract begins, Contractor(s) and subcontractor(s) shall submit seven certificates to Owner for approval covering each insurance policy carried and offered as evidence of compliance with noted requirements, signed by an authorized representative of insurance company, setting forth:

- name and address of insured;
- location of operations to which insurance applies,
- number of policy and type(s) of insurance in force thereunder on date borne by such certificate;
- policy expiration date and limit(s) of liability thereunder on date borne by such certificate;
- statement insurance of type afforded by policy applies to all operations of whatever character, undertaken by insured during performance of Contract, provided such operations are required in performance of Contract and
- provision the policy may be canceled only by mailing written notice to named insured at address shown in this policy stating when, not less than 10 days thereafter, and cancellation of such policy shall be effective, with copy to Owner of letter of intent.

These certificates will become a part of Contract Documents and must be included with Contract Documents before execution by the City of Midland. Coverages specified herein apply to all Contractor operations in connection with this Work, including automobile and other vehicles.

Contractor's insurance shall cover self, all subcontractors, and sub-subcontractors. All other sublevels of Contractors shall provide copies of proof of insurance if not covered by the general Contractor.

Contractor shall provide a Waiver of Subrogation in favor of the City of Midland and Parkhill on Worker's Compensation and Employee Liability Insurance, Contractor's Public Liability and Property Damage Liability Insurance, and Automobile Insurance.

SP-18 REMOVAL AND DISPOSAL OF STRUCTURES, UTILITIES, AND OBSTRUCTIONS

All materials and debris specified to be disposed by Contractor shall become Contractor's property and Contractor shall properly dispose off Airport property.

SP-19 CONFORMITY WITH PLANS AND ALLOWABLE DEVIATIONS

Finished surfaces shall conform to lines, grades, cross sections, and dimensions. Any deviation from Plans required by exigencies of construction shall be determined and authorized by Parkhill in writing.

SP-20 REMOVAL OF DEFECTIVE AND UNAUTHORIZED WORK

All Work rejected or condemned shall be repaired or, if not satisfactorily repaired, removed and replaced at Contractor expense. Contractor shall immediately remove materials not conforming to Specification requirements from site of Work and replaced with satisfactory material at Contractor expense.

Work done beyond that shown on Plans, or as given, except as herein provided, without proper inspection, or any extra or unclassified Work done without written authority and prior agreement in writing as to prices, will be done at Contractor risk and considered unauthorized and, at Parkhill option, may not be measured, paid for, and may be ordered removed and replaced at Contractor expense.

Upon Contractor failure to repair satisfactorily or remove and replace, if so directed, rejected, unauthorized, or condemned Work or materials immediately after receiving formal notice from Parkhill, Owner may recover for such defective Work or materials on Contractor bond, or by action in court having proper jurisdiction over such matters, or may employ labor, equipment, and satisfactorily repair or remove and replace such Work and charge cost of same to Contractor, which will be deducted from any money due.

SP-21 DISPUTED CLAIMS FOR EXTRA WORK

In case Contractor deems extra compensation is due for Work on materials not clearly covered in Contract nor ordered by Parkhill as an extra, Contractor shall notify Parkhill in writing of intention to make a claim for such extra compensation before beginning Work on which claim is based and shall afford Parkhill every facility for keeping actual cost of Work. Contractor's failure to give such notification or afford Parkhill proper facilities for keeping strict account of actual costs, shall constitute a waiver of claim for such extra compensation. Contractor's filing of such notice and keeping of costs by Parkhill shall not in any way be construed to prove claim validity. When Work is completed, Contractor shall, within 10 days, file a claim for extra compensation with Parkhill, who will present it to Owner for consideration.

SP-22 FEDERAL PARTICIPATION

Pursuant to provisions of the Act of Congress known as the Airport Improvement Program of 1982 as amended, the United States Government may pay a portion of improvement cost. This Act of Congress provides construction Work and labor in each state shall be in accordance with laws of that state subject to FAA inspection and approval and in accordance with rules and regulations made pursuant to said Act. Construction Work, therefore, will be subject to such inspection by FAA Administrator or agents as deemed necessary to meet with requirements when Federal funds are used, but such inspection will in no sense make the Federal Government a party to this Contract nor interfere with rights of either party to Contract.

SP-23 INDEMNIFICATION

CONTRACTOR SHALL INDEMNIFY AND HOLD HARMLESS AND DEFEND OWNER, PARKHILL, AND ALL OFFICERS, AGENTS, AND EMPLOYEES FROM ALL SUITS, ACTIONS, CLAIMS, DAMAGES, PERSONAL INJURIES, ACCIDENTAL DEATH, LOSSES, PROPERTY DAMAGE, AND EXPENSES OF ANY CHARACTER WHATSOEVER, INCLUDING REASONABLE ATTORNEY FEES, BROUGHT FOR/ON ACCOUNT OF ANY INJURIES/DAMAGES RECEIVED/SUSTAINED BY ANY PERSON(S)/PROPERTY, ON ACCOUNT OF ANY NEGLIGENT ACT OF CONTRACTOR, AGENTS, EMPLOYEES, OR ANY SUBCONTRACTOR, IN EXECUTION, SUPERVISION, AND OPERATIONS GROWING OUT OF OR IN ANY WAY CONNECTED WITH PERFORMANCE OF THIS CONTRACT, AND CONTRACTOR IS REQUIRED TO PAY ANY JUDGMENT WITH COSTS OBTAINED AGAINST OWNER, PARKHILL, OR ANY OFFICERS, AGENTS, OR EMPLOYEES, INCLUDING REASONABLE ATTORNEY FEES.

CONTRACTOR SHALL INDEMNIFY AND HOLD HARMLESS AND DEFEND OWNER AND ALL OWNER'S OFFICERS, AGENTS, AND EMPLOYEES AND PARKHILL AND OFFICERS, AGENTS, AND EMPLOYEES OF PARKHILL FROM ALL SUITS, ACTIONS, CLAIMS, DAMAGES, PERSONAL INJURIES, ACCIDENTAL DEATH, PROPERTY DAMAGE, LOSSES, AND EXPENSES OF ANY CHARACTER WHATSOEVER, INCLUDING ATTORNEY FEES, BROUGHT FOR/ON ACCOUNT OF ANY INJURIES/DAMAGES RECEIVED OR SUSTAINED BY ANY PERSON(S)/PROPERTY, ON ACCOUNT OF ANY NEGLIGENT ACT OF OWNER, OWNER'S OFFICERS, AGENTS, AND EMPLOYEES, OR ON ACCOUNT OF ANY NEGLIGENT ACT OF PARKHILL, OR OFFICERS, AGENTS, AND EMPLOYEES OF PARKHILL WHETHER SUCH NEGLIGENT ACTS WERE SOLE PROXIMATE CAUSE OF INJURY/DAMAGE OR A PROXIMATE CAUSE JOINTLY AND CONCURRENTLY WITH CONTRACTOR OR CONTRACTOR'S EMPLOYEES, AGENTS, OR SUBCONTRACTORS NEGLIGENCE, IN EXECUTION, SUPERVISION, AND OPERATIONS GROWING OUT OF/IN ANY WAY CONNECTED WITH PERFORMANCE OF THIS CONTRACT, AND CONTRACTOR IS REQUIRED TO PAY ANY JUDGMENT WITH COSTS WHICH MAY BE OBTAINED AGAINST OWNER OR ANY OFFICERS, AGENTS, OR EMPLOYEES, INCLUDING REASONABLE ATTORNEY FEES.

CONTRACTOR AGREES TO INDEMNIFY AND SAVE OWNER AND PARKHILL HARMLESS FROM ALL CLAIMS GROWING OUT OF ANY DEMANDS OF SUBCONTRACTORS, LABORERS, WORKMEN, MECHANICS, MATERIALMEN, AND FURNISHERS OF MACHINERY AND PARTS THEREOF, EQUIPMENT, POWER TOOLS, ALL SUPPLIES, INCLUDING COMMISSARY INCURRED IN FURTHERING PERFORMANCE OF THIS CONTRACT. WHEN OWNER SO DESIRES, CONTRACTOR SHALL FURNISH SATISFACTORY EVIDENCE ALL OBLIGATIONS OF NATURE HEREINABOVE DESIGNATED HAVE BEEN PAID, DISCHARGED, OR WAIVED.

CONTRACTOR HEREBY WAIVES ALL RIGHTS TO ANY ATTORNEY FEES AWARDED AS RESULT OF ANY ACTION BROUGHT UNDER THE TEXAS UNIFORM DECLARATORY JUDGMENTS ACT RELATING TO THIS CONTRACT.

SP-24 CONTRACTOR RESPONSIBILITY FOR WORK

Until acceptance by Parkhill of any part or all construction, as provided for in these Specifications, it shall be under charge and care of Contractor who shall take every necessary precaution against injury or damage to any part of Work by action of elements or from any other cause whatsoever, whether arising from execution/non-execution of Work. Contractor shall rebuild, repair, restore, and make good, at own expense, all injuries or damage to any portion of Work occasioned by any noted cause before completion and acceptance.

SP-25 CORRECTION OF FAULTY WORK AFTER FINAL PAYMENT

Making final payment by Owner to Contractor shall not relieve Contractor of responsibility for faulty materials or workmanship. Contractor shall promptly replace any such defects discovered within one year from date of written acceptance of Work.

SP-26 TEXAS STATE SALES TAX

Work under this Contract is for an entity which qualifies for exemption pursuant to provisions of Article 151.309 of the Texas Tax Code.

Contractor performing this Contract may purchase, rent, or lease all materials, supplies, and equipment incorporated into Project by issuing an exemption certificate to supplier in lieu of tax, said exemption certificate complying with State Comptroller rulings. However, equipment and parts for equipment purchased used on Project but not incorporated into Project do not qualify for said tax exemption.

Contractor shall issue a resale certificate in lieu of paying such sales tax for all materials incorporated into Project. Further, Contractor shall separate charges for materials incorporated into Project from charges for labor. Any such exemption certificate issued by Contractor in lieu of tax shall be subject to provisions of State Comptroller rulings.

SP-27 SEPARATE CONTRACTS

Owner reserves the right to let other contracts about/near Project. Contractor shall afford other contractors a reasonable opportunity for introduction and storage of materials, execution of Work, and coordinate Work with theirs. Contractor coordination with other contractors shall require Parkhill approval. See Article SP-3 for additional requirements concerning separate Contracts.

SP-28 TRENCH SAFETY

Contractor shall strictly comply with all requirements of Occupational Safety and Health Administration (OSHA) Manual, Chapter XVII, Subpart P - Excavation, Trenching and Shoring, for all trenching and excavation operations.

If depths of trenches are encountered over 5 feet, Contractor shall cut trench walls to angle of repose of soils encountered or submit alternate shoring details to Parkhill for approval.

SP-29 LOAD RESTRICTIONS

Contractor shall comply with all legal load restrictions in hauling materials on public roads beyond limits of Work. A special permit will not relieve Contractor of liability for damage which may result from moving material or equipment.

Equipment operations of such weight or so loaded to cause damage to structures or any other type of construction will not be permitted. Hauling materials over base course is not permitted. Hauling materials over base or surface course under construction shall be limited as directed. No loads will be permitted on a concrete pavement, base, or structure before curing period expiration. Contractor shall be responsible for all damage done by hauling equipment and shall correct such damage at own expense.

SP-30 NOTICE TO PROCEED

Notice to proceed shall state the date on which it is expected Contractor will begin construction and from which date Contract time will be charged. Contractor shall begin Work to be performed under Contract within 10 days of date set by Parkhill in written Notice to Proceed, but in any event, Contractor shall notify Parkhill at least 24 hours in advance of time actual construction operations will begin.

SP-31 PAYMENT FOR MATERIALS ON HAND

Partial payments may be made to extent of delivered cost of materials to incorporate in Work, if such materials meet requirements of Contract, Plans, and Specifications and are delivered to acceptable sites on Airport property or other sites in the vicinity acceptable to Owner. Such delivered costs of stored or stockpiled materials may be included in next partial payment after these conditions are met:

A. Material is stored/stockpiled in a manner acceptable to Parkhill at/on an approved site.
B. Contractor furnished Parkhill with acceptable evidence of quantity and quality of such stored/stockpiled materials.
C. Contractor furnished Parkhill with satisfactory evidence material and transportation costs have been paid. Contractor is to provide copies of invoices paid (listing the cost of each item) for materials on hand requested on partial payment request.
D. Contractor furnished Owner legal title (free of liens/encumbrances of any kind) to material so stored/stockpiled.
E. Contractor furnished Owner evidence material stored/stockpiled is insured against loss by damage to or disappearance of such materials any time before use in Work.

Transfer of title and Owner's payment for such stored/stockpiled materials shall in no way relieve Contractor of responsibility for furnishing and placing such materials in accordance with requirements of Contract, Plans, and Specifications.

In no case will amount of partial payments for materials on hand exceed Contract price for such materials or Contract price for Contract item in which material is intended for use.

No partial payment made for stored/stockpiled living or perishable plant materials.

Contractor bears all costs associated with partial payment of stored/stockpiled materials in accordance with provisions of this subsection. See also SP-52 "Partial Payments" and GC-46 "Partial Payments."

SP-32 WEIGHING AND MEASURING EQUIPMENT

Except as modified herein, all scales and scale installations shall meet requirements of the National Institute of Standards and Technology Handbooks 44 and 112 (published by U.S. Department of Commerce and available from Superintendent of Documents, U.S. Government Printing Office, Washington, D.D. 20402-9325), except required accuracy shall be 0.4 percent of load weighed or one graduation on the scale dial. Contractor shall provide personnel, facilities, and equipment for checking scales to Parkhill satisfaction.

Check all scales before beginning operations, after each move, at times when, in Parkhill opinion, there is a question as to accuracy/adequacy, and at least once each six months. Contractor shall furnish a report of calibration from a scale mechanic licensed by the Texas Department of Agriculture using certified weights and approved by Parkhill, certifying scales meet requirements of this item. Plant operations shall cease during checking operation. When inaccuracy/inadequacy is discovered, do not resume scale use until corrective measures are complete and/or scales calibrated. When equipment is adjusted, modify to bring performance errors as close as practicable to zero value.

SP-33 PROGRESS SCHEDULE

Within 15 working days after award of Contract (or at Preconstruction Meeting), Contractor shall submit a Project progress schedule. Progress schedule shall be prepared in a form suitable to Parkhill and show proposed starting and completion dates for each phase of construction as well as each item of Work within each phase. Progress schedule shall include a “Percent Complete Curve” with monthly amount, cumulative amount, and cumulative percent. Progress schedule, if suitable and indicates certain Project completion within the specified time, will be approved in writing by Parkhill. Revisions/changes in approved progress schedule may only be made with Parkhill approval.

SP-34 AVERAGE CLIMATIC RANGE

Time allowed for completion of entire Project shall include number of calendar days for anticipated delays due to normal weather conditions. No time extension for delays due to weather allowed until and unless such delays exceed claims for extension of time because of abnormal inclement weather. Such extension of time shall be granted only because such abnormal inclement weather prevented execution of major items of Work on normal working days. Weather conditions on a particular day may affect Work on days following the normal weather day. This subsequent delay shall not be considered abnormal and no extension of time will be considered.

The following weather table reflects meteorological data from Midland-Odessa area and will be used to determine Contract time extensions due to abnormally inclement weather. For purposes of this Contract, “abnormally inclement weather” is interpreted as number of days more than normal number of days on which rainfall exceeds 0.01 inch, or snow/ice pellets exceed 1.0 inch. Extensions of time to complete Work will be based on calendar days and granted by monthly account. No “rain days” unused for previous months may be carried over or accountable for future periods of time.

WEATHER TABLE		
MONTH	**MEAN NO. OF RAIN DAYS[1]**	**MEAN NO. OF SNOW/ICE PELLETS DAYS[2]**
January	3	0
February	3	0
March	4	0
April	3	0
May	5	0
June	5	0
July	4	0
August	5	0
September	7	0
October	3	0
November	3	0
December	3	0
TOTAL	**48**	**0**

[1] Mean number of days' rainfall, 0.01 inch or more.
[2] Mean number of days' 1.0 inch or more.
* Less than 0.5 inch.

Table based on information reported from MAF, Midland, Texas.
Latitude 31 degrees, 56 minutes N Longitude, 102 degrees 12 minutes W, elevation (ground) 2,862 feet.
Means are based on records covering 10 years from 2012-2021.

SP-35 SUBSTANTIALLY COMPLETE

In various specifications "Substantially Complete" is used. Definition shall be:

> "Substantially complete shall occur at time Work to be completed is complete as specified and Owner accepts/occupies facility/improvement. All equipment shall have been completely installed, tested, ready for Owner acceptance and use, and accepted by Owner before Work is defined as substantially complete."

SP-36 SUBMITTALS

Transmit each submittal with Contractor-standard transmittal letter including Contractor name, address, and phone number. Identify Project, Contractor, subcontractor, or supplier, pertinent Drawing sheet and detail number(s), and Specification Section number, as appropriate. Apply Contractor stamp, signed/initialed certifying review, verification of Products required, field dimensions, adjacent construction Work, and coordination of information, are in accordance with requirements of Work and Contract Documents. Schedule submittals to expedite Project and deliver to Parkhill via the Procore website (except for product samples mailed to Parkhill's physical address). Coordinate submission of related items. Identify variations from Contract Documents and product/system limitations detrimental to successful performance of completed Work. Parkhill Project Coordinator (PC) shall distribute reviewed submittals to concerned parties via the Procore website instructing parties to promptly report any inability to comply with provisions. Process/format as follows:

- Digitally upload all submittals using PDF file extension. Each submittal shall be a single PDF file including transmittal letter. Multiple files for the same submittal will not be accepted.
- Submittals in any other format, including ZIP files, will be rejected.
- Hard copies will not be accepted.

- To ensure each page is legible, PDF pages of Drawings shall be same size/scale as a hard copy. Where applicable, provide scale symbols to indicate scale. Illegible submittals will be rejected.
- Upload submittals to the Parkhill Procore website.

Submittal procedures described herein apply to Construction Progress Schedule, Products List, Shop Drawings, Product Data, Samples (actual samples to submit, not digital files), Design Data, Test Reports, Certificates, Manufacturer Instructions and Field Reports, and other types of submittal submitted to Parkhill. Submittals shall include but not necessarily limited to:

- Preliminary CPM Contractor's construction schedule.
- Detailed lighting plan for night Work (if applicable).
- Contractor's list of emergency names and phone number.
- Video and/or written report of existing facilities conditions documenting inspection results performed before start of Work.
- List of subcontractors and material suppliers with experience statement.
- Certified payroll reports and statement of compliance from Contractor and all subcontractors (submitted directly to Airport Accountant).
- Disadvantaged Business Enterprise (DBE) utilization reports (submitted with monthly pay applications).
- Three-week lookahead Project schedule (at weekly construction meetings).
- Contractor Quality Control Plan (submitted by preconstruction meeting).
- Other submittals noted in Appendix C of Construction Management Plan (CMP).
- Contractor affidavit regarding settlement of claims (closeout request).
- Original affidavit acknowledging all subcontractors, material suppliers, payrolls, bill for materials and equipment, and other indebtedness connected with Contract have been paid or otherwise satisfied (closeout request).
- Original with notary signature, full and final release and waiver on liens from Contractor, each subcontractor, and material suppler that documents that are been paid in full (closeout request).
- Warranty (due at Final Completion).
- Maintenance and operating instructions of new equipment.

SP-37 GEOTECHNICAL INFORMATION

A Geotechnical Report for this Project is available in Appendix A, however it is included for information only and not intended to represent conditions in all project areas.

SP-38 SOVEREIGN IMMUNITY

By executing this Contract, Owner is not waiving its right to sovereign immunity. Owner is retaining immunity from suit. Owner is not granting consent to be sued by legislative resolution or action.

<u>THERE IS NO WAIVER OF SOVEREIGN IMMUNITY.</u>

SP-39 GOVERNING LAW AND VENUE

This Contract shall be governed by laws of the State of Texas. All performance and payment made pursuant to this Contract shall be deemed to have occurred in Midland County, Texas. Exclusive venue for any claims, suits, or other action arising from or connected in any way to this Contract or performance of this Contract shall be in Midland County, Texas. Obligations and undertakings of each party to this Contract shall be deemed to have occurred in Midland County, Texas. This Contract shall be governed by, interpreted, enforced, and construed under the law of the State of Texas. Laws of the State of Texas shall govern, construe, and enforce all rights and duties of parties, including but not limited to tort claims and all Contractual claims or disputes, arising from or relating in any way that would direct application of laws of another jurisdiction.

SP-40 THIRD-PARTY BENEFICIARY

This Contract does not create a third-party beneficiary nor is there a third-party beneficiary to this Contract. No person/entity not a party to this Contract shall have any third-party beneficiary or other rights hereunder.

SP-41 RELEASES

NOTWITHSTANDING ANY OTHER PROVISIONS, Contractor hereby releases, acquits, RELINQUISHES, and forever discharges OWNER, Owner's employees and officers, and PARKHILL, and its employees and officers, from any and all demands, claims, DAMAGES, or causes of action of any kind whatsoever which Contractor has/might have including but not limited to BREACH OF CONTRACT, QUANTUM MERUIT, CLAIMS UNDER DUE PROCESS AND TAKINGS CLAUSES OF THE TEXAS AND UNITED STATES CONSTITUTIONS, TORT CLAIMS, OR OWNER NEGLIGENCE.

SP-42 INDEPENDENT CONTRACTOR

It is expressly understood and agreed that Contractor shall perform all work and services described herein as an independent contractor and not as an officer, agent, servant, or employee of Owner; that Contractor shall have exclusive control of and exclusive right to control details of services and work performed hereunder, and all persons performing the same; and shall be solely responsible for acts and omissions of its officers, agents, employees, contractors and subcontractors; that the doctrine of respondent superior shall not apply as between owner and Contractor, its officers, agents, employees, contractors and subcontractors; and that nothing herein shall be construed as creating a partnership or joint enterprise between Owner and Contractor. No person performing any work and services described hereunder by Contractor shall be considered an officer, agent, servant, or employee of Owner. Further, it is specifically understood and agreed that nothing in this contract is intended or shall be construed as creating a "Community of Pecuniary Interest" or "An Equal Right of Control" which would give rise to vicarious liability. Contractor shall be an independent contractor under this Contract and shall assume all rights, obligations, and liabilities applicable to it as such independent contractor. Owner does not have the power to direct the order work is done. Owner shall not have the right to control means, methods, or details of Contractor's work. Contractor shall assume exclusive responsibility for work. Contractor is entirely free to do work in its own way.

SP-43 NOTICE OF ALLEGED BREACH; STATUTORY PREREQUISITES

As a condition precedent to filing suit for alleged damages incurred by an alleged breach of an express or implied provision of this Contract, Contractor or legal representative shall give City Manager, or other reasonable official of Owner, notice in writing (consisting of one original and seven copies of notice attached to Contract) of such damages, duly verified, within 150 days after same has been sustained. Discovery rule does not apply to giving this notice. Notice shall include when, where, and how damages occurred, apparent extent thereof, amount of damages sustained, amount for which Contractor will settle, physical and mailing addresses of Contractor at time and date claim was presented as well as physical and mailing addresses of Contractor for six months immediately preceding occurrence of such damages, and names and addresses of witnesses upon whom Contractor relies to establish claim. Failure to notify City Manager within time and manner provided herein shall exonerate, excuse, and except Owner from any liability whatsoever. Owner is under no obligation to provide notice to Contractor that Contractor's notice is insufficient. Owner reserves the right to request reasonable, additional information regarding claim. Said additional information shall be supplied within 30 days after receipt of notice.

Statutory prerequisites outlined herein constitute jurisdictional requirements pursuant to Section 271.154 of the Texas Local Government Code and Section 311.034 of the Texas Government Code. Notwithstanding another provision, Contractor failure to comply with requirements herein shall perpetually bar Contractor's claim for damages under Chapter 271 of the Texas Local Government Code, and Section 311.034 of the Texas Government Code, regardless if Owner has actual/constructive notice/knowledge of said claim or alleged damages. Contractor agrees requirements of this entire Contract are reasonable.

SP-44 ASSIGNMENT

Contractor shall not directly/indirectly assign all/any part of this Contract or any interest, right, or privilege herein, without prior written consent of Owner. Owner has the sole discretion on whether to grant consent to an assignment.

SP-45 WAIVER OF ATTORNEY FEES

BY EXECUTING THIS CONTRACT, CONTRACTOR AGREES TO WAIVE AND DOES HEREBY KNOWINGLY, CONCLUSIVELY, VOLUNTARILY, AND INTENTIONALLY WAIVE ANY CLAIM IT HAS OR MAY HAVE IN THE FUTURE AGAINST OWNER, REGARDING AWARD OF ATTORNEY FEES, WHICH ARE IN ANY WAY RELATED TO CONTRACT OR CONSTRUCTION, INTERPRETATION, OR BREACH OF CONTRACT. CONTRACTOR SPECIFICALLY AGREES IF CONTRACTOR BRINGS/COMMENCES ANY LEGAL ACTION/PROCEEDING RELATED TO THIS CONTRACT, CONSTRUCTION, INTERPRETATION, VALIDITY, OR BREACH OF CONTRACT INCLUDING BUT NOT LIMITED TO ANY ACTION PURSUANT TO PROVISIONS OF THE TEXAS UNIFORM DECLARATORY JUDGMENTS ACT (TEXAS CIVIL PRACTICE AND REMEDIES CODE SECTION 37.001, ET. SEQ., AS AMENDED), OR CHAPTER 271 OF THE TEXAS LOCAL GOVERNMENT CODE, CONTRACTOR AGREES TO ABANDON, WAIVE, AND RELINQUISH ALL RIGHTS TO RECOVERY OF ATTORNEY FEES TO WHICH CONTRACTOR MIGHT OTHERWISE BE ENTITLED.

CONTRACTOR AGREES THIS IS A VOLUNTARY AND INTENTIONAL RELINQUISHMENT AND ABANDONMENT OF A PRESENTLY EXISTING KNOWN RIGHT. CONTRACTOR ACKNOWLEDGES AN UNDERSTANDING OF ALL TERMS AND CONDITIONS OF CONTRACT. CONTRACTOR FURTHER ACKNOWLEDGES AND AGREES THERE WAS AND IS NO DISPARITY OF BARGAINING POWER BETWEEN OWNER AND CONTRACTOR. THIS SECTION SHALL NOT BE CONSTRUED/INTERPRETED AS A WAIVER OF SOVEREIGN IMMUNITY.

CONTRACTOR AND OWNER ARE RELYING ON THEIR OWN JUDGMENT. EACH PARTY HAD THE OPPORTUNITY TO DISCUSS THIS CONTRACT WITH COMPETENT LEGAL COUNSEL PRIOR TO EXECUTION.

SP-46 PROMPT PAY ACT

Owner and Contractor agree Texas Government Code, Chapter 2251, Payment for Goods and Services (the "Prompt Pay Act") does not waive governmental immunity.

SP-47 PAYMENT

After Contractor completes all Work including all Change Orders altering original Scope, amount of said Contract are completed, and Owner inspected and approved that Work is completed and in compliance with Contract and all subsequent Change Orders, Owner may thereafter issue payment to Contractor in amount of Contract and all Change Orders. Owner shall be the final judge of when Contractor completes Work. Owner, at sole discretion, shall determine if Work under Contract and under any Change Orders was done to Owner requirements. Owner may make periodic payments to Contractor; however, such periodic payments may only be made pursuant to this Article and only after all Work and Change Orders are completed by Contractor and approved by Owner.

SP-48 PROJECT CLOSEOUT

Approval of Final Payment to Contractor is contingent upon completion and submittal of items listed below. Final Payment not approved until Parkhill approves Contractor's final submittal. Contractor shall:

- provide two copies of all manufacturer warranties specified for materials, equipment, and installations.
- provide weekly payroll records (not previously received) from General Contractor and all subcontractors.
- complete final cleanup. Upon completion of Work and before acceptance and final payment is made, Contractor shall remove from site all machinery, equipment, surplus and discarded materials, rubbish, temporary structures, and stumps or portions of trees. Contractor shall cut all brush and woods within limits indicated and leave site neat and presentable. Material cleared from site and deposited on adjacent property will not be considered as having been disposed satisfactorily unless Contractor obtained written permission of such property owner.
- complete all punch list items identified during Final Inspection.
- provide complete release of all claims for labor and material arising out of Contract.
- provide a certified statement signed by subcontractors indicating actual amounts paid to Disadvantaged Business Enterprise (DBE) subcontractors and/or suppliers associated with Project.
- return copies of sales tax completion forms when applicable per state requirements.
- provide manufacturer certifications for all items incorporated in Work.
- make all required Record, As-Built, or As-Constructed Drawings available.
- deliver Project Operation and Maintenance (O&M) Manual(s).
- provide Security for Construction Warranty.
- submit equipment commissioning documentation, if required.

SP-49 DISCLOSURE OF INTERESTED PARTIES

Successful proposer will be required to complete Texas Ethics Commission Form 1295-Certificate of Interested Parties and submit completed form with executed Contracts for Project. Complete Form 1295 online at the Texas Ethics website:
https://www.ethics.state.tx.us/filinginfo/1295/

Parkhill will email links to Contractor with an explanation once Contract is awarded. Contractor is responsible for completing form, printing, and submitting along with all other required Contract documents.

SP-50 PARKHILL/RPR AUTHORITY AND DUTY

Parkhill nor RPR shall supervise, direct, or have control over Contractor's Work nor have any responsibility for construction means, methods, techniques, sequences, or procedures selected by Contractor nor for Contractor's safety precautions or programs in connection with Work. These rights and responsibilities are solely those of Contractor in accordance with Contract Documents.

Parkhill nor RPR shall be responsible for any acts/omissions of Contractor, subcontractor, entity performing any portions of Work, or agents or employees of any of them. Parkhill nor RPR guarantee Contractor performance nor are responsible for Contractor's failure to perform Work in accordance with Contract Documents or any applicable laws, codes, rules, or regulations.

SP-51 ANTI-BOYCOTT STATUTES

To the extent that Sections 2271.002 and 2274.002 of the Texas Government Code (collectively, the "Anti-Boycott Statutes") apply to this Contract, Contractor hereby verifies:

- that Contractor does not boycott Israel and will not boycott Israel during the term of this Contract;
- that Contractor does not boycott energy companies and will not boycott energy companies during the term of this Contract; and
- that Contractor does not have a practice, policy, guidance, or directive that discriminates against a firearm entity or firearm trade association and will not discriminate during the term of this Contract against a firearm entity or firearm trade association.

To the extent that the Anti-Boycott Statutes do not apply to this Contract, such verification is not required, and Contractor shall be deemed to have not made such verification.

SP-52 PARTIAL PAYMENTS

Partial Payments will be made to Contractor at least once each month as work progresses. Said payments will be based upon estimates, prepared by Contractor for Architect/Engineer review, of the value of work performed and materials complete and in place, in accordance with Contract, Plans, and Specifications. Such partial payments may also include delivered actual cost of those materials stockpiled and stored in accordance with Construction Contract requirements. No partial payment will be made when amount due to Contractor since last estimate is less than $500.

1) From the total amount determined payable on a partial payment, Owner shall deduct and retain 5 percent of such total amount to protect Owner interests. Unless Owner instructs otherwise, amount Owner retains will be in effect until final payment is made except:
    a. Contractor may request release of retainage on work partially accepted by Owner in accordance with Construction Contract requirements. Contractor must provide a certified invoice to Owner to support retainage value held by Owner for partially accepted work.
2) Contractor is required to pay all subcontractors for satisfactory performance of their contracts no later than 30 days after Contractor received partial payment. Contractor must provide Owner evidence of prompt and full retainage payment held by prime Contractor to subcontractor within 30 days after subcontractor work is satisfactorily completed. Subcontractor work is satisfactorily completed when all tasks called for in subcontract are accomplished and documented as Owner requires. When Owner incrementally accepts a portion of a prime contract, subcontractor work covered by that acceptance is deemed satisfactorily completed.
3) When at least 95 percent of work is completed to Owner satisfaction, Contractor shall, at Owner discretion and with consent of surety, prepare estimates of both contract value and cost of remaining work to be done. Owner may retain an amount not less than twice the contract value or estimated cost, whichever is greater, of work remaining to be done. Remainder, less all previous payments and deductions, will then be certified for payment to Contractor.

It is understood and agreed that Contractor shall not be entitled to demand or receive partial payment based on quantities of work in excess of those provided in proposal or covered by approved change orders or supplemental agreements, except when Architect/Engineer determines such excess quantities are to be part of the final quantity for item of work in question.

No partial payment shall bind Owner to acceptance of any materials or work in place as to quality or quantity. All partial payments are subject to correction at time of final payment in accordance with Construction Contract requirements.

Contractor shall deliver Owner a complete release of all claims for labor and material arising out of this contract before final payment is made. If any subcontractor or supplier fails to furnish such a release in full, Contractor may furnish a bond or other collateral satisfactory to Owner to indemnify Owner against any potential lien or other such claim. Bond or collateral shall include all costs, expenses, and attorney fees Owner may be compelled to pay in discharging any such lien or claim.

END OF DOCUMENT

GENERAL CONDITIONS OF CONTRACT

GC-01. OWNER

When "Owner," "Party of the First Part," or "First Party" are used in Contract Documents, it shall refer to Owner as described in Contract.

GC-02. CONTRACTOR

When "Contractor," "Party of the Second Part," or "Second Party," are used, it shall mean person(s), co-partnership, or corporation so defined in Contract who agreed to perform Work embraced in this Contract, or to legal representatives.

GC-03. ARCHITECT/ENGINEER

When "Architect/Engineer" is used in this Contract, it shall refer to Parkhill, Architect/Engineer of Owner, or such other Architect/Engineer, supervisor, or inspector, as authorized by said Owner, to act as Owner's representative with respect to services performed or furnished by Architect/Engineer.

GC-04. CONTRACT DOCUMENTS

Contract Documents shall consist of Notice to Bidders (Advertisement), Instructions to Bidders, Proposal, signed Contract, Performance Bond, Payment Bond, General Conditions of the Contract, Special Provisions, Technical Specifications, Plans, and all modifications thereof incorporated in any documents before execution of Contract.

Contract Documents are complementary and called for by any one person/entity shall be as binding as if called for by all. In case of conflict between Contract Documents, priority of interpretation shall be in the following order:

1. Signed Contract,
2. Performance Bond,
3. Special Bonds (if any),
4. Proposal,
5. Special Provisions,
6. Notice to Bidders,
7. Instructions to Bidders,
8. Technical Specifications,
9. Plans,
10. General Conditions of the Contract, and
11. FAA General Contract Provisions.

GC-05. SUBCONTRACTOR

"Subcontractor," as employed herein, includes only those with a direct contract with Contractor and includes one who furnished material worked to a special design according to plans or Specifications of this Work but does not include one who merely furnished material not so worked.

GC-06. WRITTEN NOTICE

Written notice shall be deemed to be duly served if delivered in person to individual, member of firm, or officer of corporation intended, or if delivered/sent by registered mail to last business address known.

GC-07. WORK

Unless otherwise stipulated, Contractor shall provide and pay for all materials, supplies, machinery, equipment, tools, superintendence, labor, insurance, water, light, power, fuel, transportation, and other facilities necessary for execution and completion of Work covered by Contract Documents. Unless otherwise specified, all materials shall be new and both workmanship and materials of good quality. Contractor shall, if required, furnish satisfactory evidence as to kind and quality of materials. Materials or Work described in words shall have a well-known technical or trade meaning and held to refer to such recognized standards.

GC-08. DELETED

GC-09. DELETED

GC-10. LAYOUT OF WORK

Except as specifically provided herein, Contractor shall be responsible for laying out all Work and accomplish Work as acceptable to Architect/Engineer. Architect/Engineer will check Contractor's layout of all major structures and other layout work done by Contractor at Contractor request, but this check does not relieve Contractor of responsibility of correctly locating all Work in accordance with Plans and Specifications.

GC-11. ARCHITECT/ENGINEER AUTHORITY AND DUTY

Unless otherwise specified, it is mutually agreed between parties to this Contract that Architect/Engineer will observe quality and progress of Work at various times. To prevent delays, disputes, and discourage litigation, it is further agreed Architect/Engineer shall, in all cases, determine amounts and quantities of several kinds of Work paid under this Contract. He shall determine all questions in relation to said Work and construction thereof, and in all cases, decide every question which may arise relative to execution of this Contract on part of said Contractor. Architect/Engineer estimates and findings shall be conditions precedent to right of parties hereto to any action of Contract, and any rights of Contractor to receive any money under this Contract; provided, however, should Architect/Engineer render any decision or give any direction, which in the opinion of either party hereto, is not in accordance with meaning and intent of this Contract, either party may file with said Architect/Engineer within 30 days, written objection to decision/direction so rendered. Contract intent is for there to be no delay in execution of Work; therefore, written decisions/directions of Architect/Engineer as rendered shall be promptly carried out and any claim arising therefrom shall be thereafter adjusted as hereinafter provided.

Architect/Engineer shall, within a reasonable time, render and deliver to both Owner and Contractor, a written decision on all claims of parties hereto and all questions which may arise relative to execution of Work or interpretation of Contract, Specifications, and Plans. Should Architect/Engineer fail to make such decision within a reasonable time, an appeal may be taken as if decision was rendered against party appealing.

When "directed," "required," "permitted," "designated," "considered necessary," "prescribed," "approval," "acceptable," "satisfactory," or words of like import are used, it is understood direction, requirement, permission, order, designation, prescription, approved by, acceptable, or satisfactory of Architect/Engineer is intended.

In Specifications or Drawings accompanying this Contract, terms of description of various qualities relative to finish, workmanship, or other qualities of similar kind which cannot, from their nature, be specifically and clearly described and specified, but necessarily described in general terms, fulfillment of which must depend on individual judgment, in all such cases, any question of fulfillment of said Specifications shall be decided by Architect/Engineer, and said work done in accordance with interpretations of meaning of words, terms, or clauses defining character of Work.

GC-12. SUPERINTENDENCE AND PROJECT REPRESENTATION

It is agreed by Contractor that Architect/Engineer may appoint such subordinate engineers, supervisors, or project representatives as Architect/Engineer may deem proper to inspect material furnished and Work done under this Contract, see said material is furnished and done in accordance with Specifications therefor. Contractor shall furnish all reasonable aid and assistance required by subordinate engineers, supervisors, or project representatives for proper inspection and examination of Work. Contractor shall regard and obey directions and instructions of any subordinate engineers, supervisors, or project representatives so appointed when such directions and instructions are consistent with obligations of this Contract and accompanying Plans and Specifications, provided; however, should Contractor object to any orders by any subordinate engineer, supervisor, or project representative, Contractor may, within six days, make written appeal to Architect/Engineer for his decision.

GC-13. CONTRACTOR DUTY AND SUPERINTENDENCE

Contractor shall give personal attention to faithful prosecution and completion of this Contract and keep on Work, during progress, competent superintendent, and any necessary assistants all satisfactory to Architect/Engineer. Superintendent shall represent Contractor when absent and all directions given shall be as binding as if given to Contractor. Adequate supervision by competent and responsible Contractor representatives is essential to proper performance of Work and lack of such supervision shall be grounds for suspending Contractor operations. Confirm important directions in writing to Contractor. Confirm other directions on written request in each case.

GC-14. CONTRACTOR UNDERSTANDING

It is understood and agreed that Contractor is, by careful examination, satisfied as to nature and location of Work, confirmation of ground, character, quality, and quantity of materials to be encountered, character of equipment and facilities needed preliminary to and during prosecution of Work, general and local conditions, and all other matters which can in any way affect Work under this Contract. No verbal agreement or conversation with any officer, agent, or employee of Owner, either before or after execution of this Contract, shall affect or modify any terms or obligations herein contained.

GC-15. CHARACTER OF WORKERS

Contractor agrees to employ orderly and competent employees, skillful in performance of work required under this Contract, to do Work; and agrees whenever informed by Architect/Engineer in writing, any employee(s) on Work are, in Architect/Engineer opinion, incompetent, unfaithful, or disorderly, such employee(s) shall be discharged from Work and not again employed on Work without Architect/Engineer's written consent.

GC-16. CONTRACTOR BUILDINGS

Building structures for housing employees, erecting tents, or other forms of protection will be permitted only at such places as Architect/Engineer shall direct, and sanitary conditions of grounds in or about such structures shall always be maintained as satisfactory to Architect/Engineer.

GC-17. SANITATION

Contractor shall construct and maintain necessary sanitary conveniences for use of laborers on work, properly secluded from public observation, approved by Architect/Engineer, and use strictly enforced.

GC-18. SHOP DRAWINGS

Contractor shall submit to Architect/Engineer with such promptness as to cause no delay in work of any Contractor, Shop/Setting Drawings and schedules required for Work of various trades, and Architect/Engineer shall pass upon them with reasonable promptness, making required corrections. Architect/Engineer approval of such Drawings or schedules, shall not relieve Contractor from responsibility for deviations from Drawings or Specifications, unless Architect/Engineer called attention to, in writing, such deviations at time of submission nor relieve Contractor from responsibility for errors of any sort in Shop Drawings or schedules.

GC-19. PRELIMINARY APPROVAL

Architect/Engineer shall not have power to waive obligations of this Contract for furnishing by Contractor of good material, and performing good work as herein described, and full accordance with Plans and Specifications. No failure or omission of Architect/Engineer to condemn any defective work or material shall relieve Contractor from obligations to tear out, remove, and properly replace same at any time prior to final acceptance upon discovery of said defective work or material, provided; however, Architect/Engineer shall, upon request of Contractor, inspect, accept, and/or reject any material furnished, and in event material was once accepted by Architect/Engineer, such acceptance shall be binding on Owner, unless clearly shown such material furnished does not meet specifications for this work. Any questioned work may be ordered taken up or removed for Architect/Engineer to re-examine, prior to final acceptance, and, if found not in accordance with Specifications for said work, all expense of removing, re-examination, and replacement shall be borne by Contractor, otherwise expense thus incurred shall be allowed as Extra Work and paid for by Owner, provided, where inspection or approval is specifically required by Specifications prior to performance of certain work, should Contractor proceed with such work without requesting prior inspection or approval, Contractor shall bear all expense of taking up, removing, and replacing work if so directed by Architect/Engineer.

GC-20. DEFECTS AND REMEDIES

It is further agreed if Work or any part thereof, or any material brought on site of Work for use in Work or selected for same, shall be deemed by Architect/Engineer as unsuitable or not in conformity with Specifications, Contractor shall, after receipt of written notice thereof from Architect/Engineer, forthwith remove such material and rebuild or otherwise remedy such work for full accordance with this Contract.

GC-21. CHANGES AND ALTERATIONS

Contractor further agrees Owner may make such changes and alterations as Owner sees fit, in line, grade, form, dimensions, plans, or materials for Work herein contemplated, or any part thereof, before or after beginning construction without affecting validity of this Contract and accompanying performance bond.

If such changes or alterations diminish quantity of Work to do, they shall not constitute basis for a claim for damages, or anticipated profits on Work that may be dispensed with, except as provided for unit price items under “Estimated Quantities.” If amount of Work is increased or decreased, and Work can fairly be classified under Specifications, price adjustment for such increase or decrease shall be made according to quantity actually done and at unit price, if any, established for such work under this Contract, except as provided for unit price items under “Estimated Quantities;” otherwise, price adjustment for such changed work shall be made as provided under Extra Work. In case Owner shall make such changes or alterations as useless any material already done or material already furnished or used, Owner shall recompense Contractor for any material or labor so used, and any actual loss occasioned by such change, due to actual expense incurred in preparation as originally planned.

GC-22. RIGHT OF ARCHITECT/ENGINEER TO MODIFY METHODS AND EQUIPMENT

If at any time, methods or equipment used by Contractor are found inadequate to secure quality of Work or rate of progress required under this Contract, Architect/Engineer may order Contractor, in writing, to increase safety or improve character and efficiency, and Contractor shall comply with such order.

If at any time, Working force of Contractor is inadequate for securing progress herein specified, Contractor shall, if so ordered in writing, increase his force or equipment, or both, to such an extent as to give reasonable assurance of compliance with schedule of progress.

GC-23. KEEPING PLANS AND SPECIFICATIONS ACCESSIBLE

Architect/Engineer shall furnish Contractor with an adequate and reasonable number of copies of all Specifications without additional expense, and Contractor shall keep one copy of same constantly accessible on Work, with latest revisions noted thereon.

GC-24. OWNERSHIP OF DRAWINGS

All Drawings, Specifications, and copies thereof furnished by Architect/Engineer shall not be reused on other work, and with exception of signed contract sets, are returned to him on request, at completion of Work. All models are property of Owner.

GC-25. ADEQUACY OF DESIGN

It is understood Owner employed competent engineers and designers. It is, therefore, agreed Owner shall be responsible for adequacy of design, sufficiency of Contract Documents, safety of structure, and practicability of operations of completed Project, provided Contractor complied with requirements of said Contract Documents, all approved modifications thereof, additions, and alterations thereto approved in writing by Owner. Burden of proof of such compliance shall be upon Contractor to show compliance with said requirements of Contract Documents, approved modifications thereof, and all approved additions and alterations thereto.

GC-26. RIGHT OF ENTRY

Owner reserves the right to enter property or location on which Work herein contracted for are to be constructed or installed, by such agent(s) as elected, to supervise and inspect Work, or construct or install such collateral work as said Owner may desire.

GC-27. COLLATERAL CONTRACTS

Owner agrees to provide by separate contract or otherwise, all labor and material essential to completion of Work specifically excluded from this Contract, not delaying progress of Work, or damage said Contractor, except where such delays are specifically mentioned elsewhere in Contract Documents.

GC-28. DISCREPANCIES AND OMISSIONS

It is further agreed the intent of this Contract is all work must be done and material furnished in accordance with generally accepted practice, and in the event of any discrepancies between separate Contract Documents, priority of interpretation defined under “Contract Documents” shall govern. In the event of a remaining doubt as to meaning and intent of any portion of Contract, Specifications, or Drawings, Architect/Engineer shall define which is intended to apply to Work.

GC-29. DELETED

GC-30. PROTECTION AGAINST ACCIDENT TO EMPLOYEES AND THE PUBLIC

Contractor shall take out and procure a policy of worker compensation with an insurance company licensed to transact business in the State of Texas, which policy shall comply with Workman's Compensation Law of the State of Texas. Contractor shall always exercise reasonable precautions for the safety of employees and others on/near Work and comply with all applicable provisions of Federal, State, and Municipal safety laws and building and construction codes. All machinery, equipment, and other physical hazards shall be guarded in accordance with the "Manual of Accident Prevention in Construction" of the Associated General Contractors of America except where incompatible with Federal, State, or Municipal laws or regulations. Contractor, sureties, and insurance carriers shall defend, indemnify, and save harmless Owner and all officers, agents, employees, Architect/Engineer, agents, and employees from all suits, actions, or claims of any character, name, and description brought for or on account of any injuries or damages received or sustained by any persons/property, on account of any negligent act or fault of Contractor or any subcontractor, agents, or employees, in execution and supervision of said Contract and Project of this Contract or on account of Contractor or any subcontractor failure to provide necessary barricades, warning lights, or signs, and will be required to pay any judgment with costs obtained against Owner or any officers, agents, or employees, and/or Architect/Engineer, agents, and/or employees.

Safety precautions taken shall be sole responsibility and discretion of Contractor, as an independent contractor; inclusion of this paragraph in Contract, as well as any notice given by Owner, Architect/Engineer, or representatives concerning omissions under this article as Work progresses, are intended only as reminders to Contractor of duty and not construed as any assumption of duty to supervise safety precautions by Owner or Architect/Engineer.

GC-31. CONTRACTOR INSURANCE

Contractor shall procure and carry, at sole cost and expense, throughout life of Contract, insurance protection as hereinafter specified. All Insurance shall name Owner and Architect/Engineer as additional insureds except Worker's Compensation and Employer Liability Insurance. Such insurance shall be carried with an insurance company licensed to transact business in the State of Texas and cover all operations in connection with this Contract. Contractor insurance shall cover self and, at minimum, all subcontractors and sub-subcontractors. All other sublevels of contractors shall provide copies of proof of insurance if not covered by General Contractor.

Contractor shall provide a Waiver of Subrogation in favor of City of Midland and Parkhill on Worker's Compensation, Employer Liability Insurance, Contractor's Public Liability, Property Damage Liability Insurance, and Automobile Insurance.

a. Worker's Compensation and Employer Liability Insurance: As required by statute, covering all employees employed on Work whether employed by Contractor or subcontractor.
b. Contractor's Public Liability and Property Damage Liability Insurance: Providing for a limit not less than $1,000,000.00 for all damages arising out of bodily injuries to or death of one person, and subject to that limit for each person, a total limit of $1,000,000.00 for all damages arising out of bodily injuries to or death of two or more persons in any one accident, and regular Contractor's Property Damage Liability Insurance providing for a limit of not less than $1,000,000.00 for all damages arising out of injury to or destruction of property in any one accident, and subject to that limit per accident, a total (or aggregate) limit of $2,000,000.00 for all damages arising out of injury to or destruction of property during policy period.
c. Automobile Insurance: Providing a limit not less than $1,000,000.00 for injuries, including accidental death, to any one person and, subject to same limit for each person a total limit of $2,000,000.00 on account of one accident, and automobile property damage insurance in an amount not less than $500,000.00.

d. Proof of Insurance Carriage: Before work on any contract or subcontract, each Contractor and subcontractor shall submit to Owner for approval, six certificates covering each insurance policy carried and offered as evidence of compliance with requirements, signed by an authorized representative of the insurance company, setting forth:

1. Name and address of insured;
2. Location of operations to which insurance applies;
3. Number of policy and type(s) of insurance in force thereunder on date borne by such certificate;
4. Expiration date of policy and limit(s) of liability thereunder on date borne by such certificate;
5. Statement that insurance of type afforded by policy, applied to all operations of whatever character, undertaken by insured during performance of this Contract, provided such operations are required in performance of Contract; and
6. Provision that policy may be cancelled only by mailing written notice to named insured at address shown in this policy stating when, not less than 10 days thereafter, cancellation of such policy shall be effective, with copy to Owner of letter of intent.

GC-32. TIME FOR COMPLETION AND LIQUIDATED DAMAGES

It is hereby understood and mutually agreed by and between Contractor and Owner, date of beginning and time for completion as specified in Contract of Work to be done hereunder, are ESSENTIAL CONDITIONS of this Contract; and further mutually understood and agreed Work embraced in this Contract shall be commenced on a date to be specified in "Notice to Proceed."

Contractor agrees said Work shall be prosecuted regularly, diligently, and uninterruptedly at such rate of progress as will ensure full completion thereof within time specified. It is expressly understood and agreed, by and between Contractor and Owner, time for completion of Work described herein is a reasonable time for completion of same, taking into consideration average climatic range and usual industrial conditions prevailing in this locality.

If said Contractor shall neglect, fail, or refuse to complete Work within time herein specified, or any proper extension thereof granted by Owner, Contractor does hereby agree, as a part consideration for awarding this Contract, to pay to Owner amount specified in Contract, not as a penalty but as liquidated damages for such breach of contract as hereinafter set forth, for each calendar day Contractor shall be in default after time stipulated in Contract for completing Work.

Said amount is fixed and agreed upon by and between Contractor and Owner because of impracticability and extreme difficulty of fixing and ascertaining actual damages Owner would in such event sustain, and said amount is agreed to be amount of damages Owner would sustain and said amount retained as necessary by Owner from current periodical estimates.

It is further agreed time is of the essence of every portion of this Contract and Specifications wherein a definite and certain length of time is fixed for performance of any act whatsoever; and where under Contract an additional time is allowed for completion of any work, new time limit fixed by such extension shall be of the essence of this Contract. Provided, Contractor shall not be charged with liquidated damages or any excess cost when Owner determines Contractor is without fault and Contractor's reasons for time extension are acceptable to Owner; Provided, further, Contractor shall not be charged with liquidated damages of any excess cost when delay in completion of Work is due:

a. To any preference, priority, or allocation order duly issued by the Government;
b. To unforeseeable cause beyond Contractor control and without fault or negligence including but not restricted to acts of God or public enemy, acts of Owner, acts of another Contractor in performance of contract with Owner, fires, floods,

epidemics, quarantine restrictions, strikes, freight embargoes, and severe weather; and

c. To any delays of subcontractors/suppliers occasioned by any cause specified in (a) and (b) of this article:

Provided further, Contractor shall, within 10 days from beginning of such delay, unless Owner shall grant a further time prior to date of final settlement of Contract, notify Owner in writing of causes of delay, who shall ascertain facts and extent of delay and notify Contractor within a reasonable time of decision in the matter.

GC-33. PRICE FOR WORK

In consideration of furnishing all necessary labor, equipment, and material and completion of all work by Contractor, and on delivery of all material embraced in this Contract in full conformity with Specifications and stipulations herein contained, Owner agrees to pay Contractor prices set forth in Proposal hereto attached, made a part of this Contract, and Contractor hereby agrees to receive such prices in full for furnishing all material and labor required for aforesaid Work, also for all expenses incurred, and well and truly performing same and whole thereof in the manner and according to this Contract, Specifications, Drawings, and requirements of Architect/Engineer.

GC-34. BONDS

It is further agreed by parties to this Contract that Contractor will execute bonds in sum of 100 percent of total contract price for satisfactory performance of Work and payment of all labor, materials, and equipment in accordance with this Contract on forms provided for this purpose, executed by an approved surety company authorized to do business in the State of Texas, and agreed this Contract shall not be in effect until such bonds are furnished and approved by Owner. Performance and Payment Bonds shall comply with Chapter 2253 of the Texas Government Code.

GC-35. LOSSES FROM NATURAL CAUSES

Unless otherwise specified, all loss or damage to Contractor arising out of the nature of Work to be done, action of elements, any unforeseen circumstances in prosecution of same, or unusual obstructions/difficulties encountered in prosecution of Work, shall be sustained and borne by Contractor at own expense.

GC-36. PROTECTION OF ADJOINING PROPERTY

Said Contractor shall take proper means to protect adjacent/adjoining property/properties, in any way encountered, which might be injured/seriously affected by any process of construction undertaken under this Contract, from any damage/injury by reason of said process of construction; and shall be liable for any/all claims for such damage on account of failure to fully protect all adjoining property. Contractor agrees to indemnify, save, and hold harmless Owner against any claim(s) for damages due to any injury to any adjacent or adjoining property, arising/growing out of performance of Contract, but any such indemnity shall not apply to any claim of any kind arising out of existence or character of Work.

GC-37. PROTECTION AGAINST SUBCONTRACTOR, LABORER, MATERIALMEN AND FURNISHER OF MACHINERY, EQUIPMENT, AND SUPPLY CLAIMS

Contractor agrees to indemnify and save Owner harmless from all claims growing out of lawful demands of subcontractors, laborers, workmen, mechanics, materialmen, and furnishers of machinery and parts thereof, equipment, power tools, and all supplies, including commissary, incurred in furthering the performance of this Contract. When so desired by Owner, Contractor shall furnish satisfactory evidence that all obligations of nature herein designated, have been paid, discharged, or waived. If Contractor fails, Owner may, at Contractor option, pay directly any unpaid bills, of which Owner has written notice, or withhold from Contractor's unpaid compensation a sum of money deemed reasonably sufficient to liquidate any/all such lawful claims until satisfactory evidence is furnished that all liabilities

were fully discharged, whereupon payments to Contractor shall be resumed in full, in accordance with terms of this Contract, but in no event shall provisions of this article be construed to impose any obligations upon Owner by either Contractor or surety.

GC-38. PROTECTION AGAINST ROYALTIES OR PATENTED INVENTION

Contractor shall pay all royalties and license fees and provide use of any design, device, material, or process covered by letters patent or copyright by suitable legal contract with patentee/owner. Contractor shall defend all suits/claims for infringement of any patent/copyrights and indemnify and save Owner harmless from any loss on account thereof, except Owner shall defend all such suits and claims and be responsible for all such loss when a particular design, device, material, or process/product of a particular manufacturer is specified/required by Owner provided; however, if choice of alternate design, device, material, or process is allowed, Contractor shall indemnify and save Owner harmless from any loss on account of thereof. If material/process specified/required by Owner is an infringement, Contractor shall be responsible for such loss unless promptly giving such information to Owner.

GC-39. LAWS AND ORDINANCES

Contractor shall always observe and comply with all Federal, State, and local laws, ordinances, and regulations, which affect Contractor Work, and indemnify and save harmless Owner against any claims arising from violation of any such laws, ordinances, and regulations by Contractor or employees, except where such violations are called for by provisions of Contract Documents. If Plans and Specifications are at variance therewith, Contractor shall promptly notify Architect/Engineer in writing, and any necessary changes be adjusted as provided in Contract for changes in Work. If Contractor performs any work knowing it to be contrary to such laws, ordinances, rules, regulations, and without such notice to Architect/Engineer, Contractor shall bear all costs arising therefrom. In case Owner is a body politic and corporate law deriving powers, insofar as same regulates objects for which, in manner in which, or conditions under which Owner may enter into contract, shall be controlling, and considered as part of this Contract, to same effect as though embodied herein.

GC-40. ASSIGNMENT AND SUBLETTING

Contractor further agrees to retain personal control and give personal attention to fulfillment of Contract and not assign by Power of Attorney, or otherwise, or sublet said Contract without written consent of Owner, and no part or feature of Work will be sublet to anyone objectionable to Architect/Engineer or Owner. Contractor further agrees subletting of any portion/feature of Work or materials required in performance of this Contract, shall not relieve Contractor from full obligations to Owner, as provided by this Contract.

GC-41. TIME AND ORDER OF COMPLETION

It is the meaning and intent of this Contract, unless otherwise herein specifically provided, Contractor be allowed to prosecute Work at such times and sessions, in such order of precedence and manner most conducive to economy of construction provided; however, order and time of prosecution shall be such that Work shall be substantially completed as a whole or in part, in accordance with this Contract, Plans, and Specifications, and within time of completion designated in proposal; provided also, when Owner is having other work done, by contract or his own force, Architect/Engineer may direct time and manner of constructing Work done under this Contract so conflict will be avoided and construction of various works done for Owner shall be harmonized.

Contractor shall submit, at such times reasonably requested by Architect/Engineer, schedules to show order in which Contractor proposes to carry on Work, with dates at which Contractor will start several parts of Work and estimated dates of completion of several parts.

GC-42. EXTENSION OF TIME

Should Contractor be delayed in completion of Work by any act/neglect of Owner, Architect/Engineer, any employee of either, other contractors employed by Owner, changes ordered in Work, strikes, lockouts, fires, and unusual delays by common carriers, unavoidable cause(s) beyond Contractor's control, or any cause which Architect/Engineer decides justifies delay, an extension of time shall be allowed for completing Work, sufficient to compensate for delay, amount of extension determined by Architect/Engineer, provided, however, Contractor shall give Architect/Engineer prompt notice in writing of cause of such delay.

GC-43. HINDRANCES AND DELAYS

No claims shall be made by Contractor for damages resulting from hindrances/delays from any cause (except where Work is stopped by order of Owner for own convenience) during progress of any portion of Work embraced in this Contract. In case said Work shall be stopped by act of Owner, such expense as in judgment of Architect/Engineer is caused by such stoppage of said Work shall be paid by Owner to Contractor.

GC-44. QUANTITIES AND MEASUREMENTS

No extra or customary measurements of any kind allowed, but actual measured and/or computed length, area, solid contents, number, and weight only considered, unless otherwise specifically provided.

GC-45. ESTIMATED QUANTITIES

This Contract, including Specifications, Plans, and estimate, is intended to clearly show all Work to be done and material furnished hereunder. Where estimated quantities are shown for various classes of work to be done and material furnished under this Contract, they are approximate, used only as a basis for estimating probable cost of Work, and comparing proposals offered for Work. It is understood and agreed the actual amount of Work to be done and material furnished under this Contract may differ somewhat from these estimates, and where basis for payment under this Contract is unit price method, payment shall be for actual amount of such work done and material furnished.

Where payment is based on unit price method, Contractor agrees to make no claim for damages, anticipated profits, or otherwise on account of any differences found between quantities of Work actually done, material actually furnished under this Contract, and estimated quantities contemplated and contained in proposal; provided, however, where actual quantity of any major item in this Contract is an estimated quantity and actual quantity of such "major item" varies more than 25 percent above or below estimated quantity stated in this Contract, an equitable adjustment in Contract price shall be made upon demand of either party. Equitable adjustment shall be based upon any increase/decrease in costs due solely to variation above 125 percent or below 75 percent of estimated quantity.

"Major Item" shall be any individual bid item included in proposal with a total cost equal to or greater than 10 percent of total Contract cost, computed on basis of original bid proposal, quantities, and Contract unit prices.

Any revised consideration is to be determined by agreement between parties, otherwise by terms of this Contract, as provided under "Extra Work."

GC-46. PARTIAL PAYMENTS

On/before the last day of each month, Contractor shall prepare for Architect/Engineer review, a statement showing, as completely as practicable, total value of Work done by Contractor for prior month/period. Statement shall also include value of all sound materials delivered on site of Work to be fabricated into Work. Architect/Engineer, after approval, shall submit Contractor's partial pay application to Owner.

Owner shall then pay Contractor within three working days after receipt of partial payment from applicable governmental authority, total amount of Architect/Engineer's statement, less 5 percent of amount thereof, which 5 percent shall be retained until final payment, and further less all previous payments and all further sums may be retained by Owner under terms of this Contract. It is understood; however, in case whole Work be near to completion and some unexpected and unusual delay occurs due to no fault or neglect on part of Contractor, Owner may, upon Architect/Engineer written recommendation, pay a reasonable and equitable portion of retained percentage to Contractor; or Contractor, at Owner's option, may be relieved of obligation to fully complete Work, and thereupon, Contractor shall receive payment of balance due under Contract subject only to conditions stated under "Final Payment."

GC-47. USE OF COMPLETED PORTIONS

Owner shall have the right to take possession of and use any completed/partially completed portions of Work, notwithstanding time for completing entire work or such portions may not have expired but such taking possession and use shall not be deemed an acceptance of any work not completed in accordance with Contract Documents. If such prior use increases cost of or delays Work, Contractor shall be entitled to such extra compensation, or extension of time, or both, as Architect/Engineer determines.

GC-48. FINAL COMPLETION AND ACCEPTANCE

Within 20 days after Contractor gives Architect/Engineer written notice that Work is complete, Architect/Engineer and Owner shall inspect Work and within said time, if Work is completed in accordance with Contract Documents, Architect/Engineer shall issue to Owner and Contractor a Certificate of Completion, and thereupon it shall be duty of Owner, within 10 days, to issue a Certificate of Acceptance of Work to Contractor.

GC-49. FINAL PAYMENT

Upon issuance of Certificate of Completion, Architect/Engineer shall proceed to make final measurements and prepare final statement of value of all Work performed and materials furnished under terms of Contract and certify same to Owner, who shall pay Contractor on/before the 20th day after date of Certificate of Completion, or if governmental financial assistance is involved, within 30 working days of receipt of final payment from applicable governmental authority, balance due Contractor under terms of this Contract, provided full performance of contractual obligations under terms of this Contract; and said payment shall become due in any event upon said performance by Contractor. Neither Certificate of Acceptance, final payment, nor any provision in Contract Documents, shall relieve Contractor of obligation for fulfillment of any warranty required in Special Provisions of Specifications.

GC-50. PAYMENT WITHHELD

Owner may, on account of subsequently discovered evidence, withhold/nullify whole/part of any certificate to such extent as necessary for protection from loss on account of:

a. Defective work not remedied;
b. Claims filed or reasonable evidence indicating possible filing of claims;
c. Contractor failure to make payments properly to subcontractors, for material, or labor; and/or
d. Damage to another contractor.

When grounds removed or Contractor provides a Surety Bond satisfactory to Owner to protect Owner in amount withheld, payment shall be made for amounts withheld because of them.

GC-51. DELAYED PAYMENTS

Should Owner fail to pay Contractor of sum named in any partial/final statement, when payment is due, or Architect/Engineer fails to issue any statement on/before date provided, Owner shall pay Contractor, in addition to sum shown as due by such statement, interest thereon at the rate of 6 percent per annum, unless otherwise specified, from date due as provided under "Partial Payments" and "Final Payments," until fully paid, fully liquidating any injury to Contractor growing out of such delay in payment, but right is expressly reserved to Contractor in the event payments not promptly made as provided under "Partial Payments," to at any time thereafter treat Contract as abandoned by Owner and recover compensation, as provided under "Abandonment of Contract," unless such payments are withheld in accordance with provisions of "Payments Withheld."

GC-52. EXTRA WORK

"Extra Work," as used in this Contract, shall mean/include all Work required by Architect/Engineer or Owner done by Contractor to accomplish any change, alteration, or addition to Work shown upon Plans, or reasonably implied by Specifications, and not covered by Contractor's Proposal, except as provided under "Changes and Alterations" herein.

It is agreed Contractor shall perform all Extra Work under Architect/Engineer direction when presented with a written Extra Work Order signed by Architect/Engineer, subject, however, to right of Contractor to require a written confirmation of such Extra Work Order by Owner. It is also agreed compensation to be paid Contractor for performing said Extra Work shall be determined by one or more of the following methods:

Method A - By agreed unit prices; or
Method B - By agreed lump sum; or
Method C - If neither Methods A nor B are agreed upon before Extra Work is commenced, Contractor shall be paid "actual field cost" of Work, plus 15 percent.

In the event said Extra Work be performed and paid for under Method C, provisions of this Article shall apply and "actual field cost" defined to include cost of all workmen such as foremen, timekeepers, mechanics, and laborers, and materials, supplies, teams, trucks, rentals on machinery and equipment, for time actually employed/used on such Extra Work, plus actual transportation charges necessarily incurred, together with all expenses incurred directly on account of such Extra Work, including Social Security, Old Age Benefits, Maintenance Bonds, Public Liability and Property Damage, Workmen's Compensation, and all other insurance as required by any law/ordinance, or directed by Architect/Engineer or Owner, or by them agreed to. Architect/Engineer may direct form in which accounts of "actual field cost" shall be kept and records of these accounts made available to Architect/Engineer. Architect/Engineer may also specify in writing, before Work commences, method of doing Work as well as type and kind of machinery and equipment to be used; otherwise, these matters determined by Contractor. Unless otherwise agreed upon, prices for use of machinery and equipment shall be determined by using 100 percent, unless otherwise specified, of the latest schedule of Equipment Ownership Expense adopted by the Associated General Contractors of America. Where practicable, terms and prices for use of machinery and equipment shall be incorporated in Written Extra Work Order. The 15 percent of "actual field cost" paid Contractor, shall cover and compensate profit, overhead, general superintendence and field office expense, and all other elements of cost and expense not embraced within "actual field cost" as herein defined, save that where Contractor's Camp or Field Office must be maintained primarily on account of such Extra Work, then cost to maintain and operate same shall be included in "actual field cost."

No claim for Extra Work of any kind allowed unless Architect/Engineer orders in writing. In case any oral/written orders/instructions appear to Contractor to involve Extra Work for which compensation or adjustment in construction time should be received, Contractor shall make written request to Architect/Engineer for written order authorizing such Extra Work. Should a difference of opinion arise as to what does/does not constitute Extra Work, or as to payment therefor, and Architect/Engineer insists upon performance, Contractor shall proceed with Work after making written request for written order and keep an accurate account of "actual field cost" thereof, as provided under Method C. Contractor will thereby preserve right to submit matter of payment by filing a claim as herein provided.

GC-53. TIME OF FILING CLAIMS

It is further agreed by both parties hereto, all questions of dispute/adjustment presented by Contractor shall be in writing and filed with Architect/Engineer within 15 days after Architect/Engineer gives any directions, order, or instruction to which Contractor desires to take exception. Architect/Engineer shall reply to such written exceptions by Contractor and render a final decision in writing. In case Contractor should appeal from Architect/Engineer's decision, appeal shall be filed with Architect/Engineer and Owner in writing within 10 days after date of delivery to Contractor of Architect/Engineer's final decision. It is further agreed final acceptance of Work by Owner and acceptance by Contractor of final payment, shall be a bar to any claim by either party, except as noted otherwise in Contract Documents.

GC-54. DELETED

GC-55. ABANDONMENT BY CONTRACTOR

In case Contractor should abandon and fail/refuse to resume work within 10 days after written notification from Owner or Architect/Engineer, or Contractor fails to comply with Architect/Engineer orders, when such orders are consistent with Contract Documents, then if where a performance bond exists, Surety on bond shall be notified in writing and directed to complete Work, and a copy of said notice be delivered to Contractor.

After receiving said notice of abandonment, Contractor shall not remove from Work any machinery, equipment, tools, materials, or supplies on the job, but same, together with any materials and equipment under contract for Work, may be held for use on Work by Owner or Surety on construction bond, or another contractor in completion of Work; and Contractor shall not receive any rental/credit therefor (except when used in connection with Extra Work, where credit allowed as provided for under "Extra Work"), it understood use of such equipment and materials will ultimately reduce cost to complete Work and reflected in final settlement.

If no performance bond provided or Surety should fail to commence compliance with notice for completion herein provided for, within 10 days after service of such notice, Owner may provide for completion of Work in either of the following elective manners:

a. Owner may thereupon employ such force of men and use such machinery, equipment, tools, materials, and supplies as Owner deems necessary to complete Work and charge expense of such labor, machinery, equipment, tools, materials, and supplies to Contractor, and expense charged shall be deducted and paid by Owner out of such moneys due or may thereafter any time become due to Contractor under and by virtue of this Contract. In case such expense is less than sum payable under this Contract, if same had been completed by Contractor, then Contractor shall receive the difference. In case such expense is greater than sum payable under this Contract, if same completed by said Contractor, then Contractor and/or Surety shall pay amount of such excess to Owner; or

b. Owner under sealed bids, after five days' notice, published one or more times in a newspaper having general circulation in county of location of Work, may let Contract for completion of Work under substantially same terms and conditions

provided in this Contract. In case of any increase in cost to Owner under new contract as compared to what would have been cost under this Contract, such increase shall be charged to Contractor and Surety shall remain bound therefor. However, should cost to complete any such new contract prove less than cost to complete under this Contract, Contractor and/or Surety shall be credited therewith.

When Work shall have been substantially completed, Contractor and Surety shall be so notified and Certificates of Completion and Acceptance, as provided herein, issued. Complete itemized statement of Contract accounts, certified to by Architect/Engineer as correct, shall then be prepared and delivered to Contractor and Surety, whereupon Contractor and/or Surety, or Owner as case may be, shall pay balance due as reflected by said statement, within 15 days after date of such Certificate of Completion.

In the event statement of accounts shows cost to complete Work is less cost to Owner, had Work been completed by Contractor under terms of this Contract; or when Contractor and/or Surety shall pay balance shown due by them to Owner, then all machinery, equipment, tools, materials, or supplies left on site of Work shall be turned over to Contractor and/or Surety. Should cost to complete Work exceed Contract price and Contractor and/or his Surety fail to pay amount due Owner within time designated herein, and there remains any machinery, equipment, tools, materials, or supplies on site of Work, notice thereof, together with an itemized list of such equipment and materials shall be mailed to Contractor and Surety at respective addresses designated in this Contract, provided; however, actual written notice given in any manner will satisfy this condition. After mailing or other giving of such notice, such property shall be held at risk of Contractor and Surety subject only to duty of Owner to exercise ordinary care to protect such property. After 15 days from date of said notice, Owner may sell such machinery, equipment, tools, materials, or supplies and apply net sum derived from such sale to credit of Contractor and Surety. Such sale may be made at public/private sale, with/without notice, as Owner elects. Owner shall release any machinery, equipment, tools, materials, or supplies, which remain on Work, and belong to persons other than Contractor or Surety, to proper owners. Books on all operations provided herein shall be open to Contractor and Surety.

GC-56. ABANDONMENT BY OWNER

In case Owner shall fail to comply with Contract terms and fail/refuse to comply with said terms within 10 days after written notification by Contractor, Contractor may suspend/wholly abandon Work and remove therefrom all machinery, tools, equipment, and all materials on site of work not included in payments to Contractor and have not been wrought into Work. And thereupon Architect/Engineer shall make an estimate of total amount earned by Contractor, which estimate shall include value of all Work actually completed by said Contractor (at prices stated in attached proposal where unit prices are used), value of all partially completed Work at a fair and equitable price, and amount of all Extra Work performed at prices agreed upon, or provided for by terms of this Contract, and a reasonable sum to cover cost of any provisions made by Contractor to carry whole work to completion and which cannot be utilized. Architect/Engineer shall then make a final statement of balance due Contractor by deducting from estimates all previous payments by Owner and other sums retained by Owner under terms of this Contract and certify same to Owner who shall pay to Contractor on or before 30 days after date of notification by Contractor, balance shown by said final statement as due Contractor, under terms of this Agreement.

FEDERAL CONTRACT PROVISIONS

ACCESS TO RECORDS AND REPORTS

Contractor must maintain an acceptable cost accounting system. Contractor agrees to provide the Owner, the Federal Aviation Administration and the Comptroller General of the United States or any of their duly authorized representatives access to any books, documents, papers and records of Contractor which are directly pertinent to the specific contract for the purpose of making audit, examination, excerpts and transcriptions. Contractor agrees to maintain all books, records and reports required under this contract for a period of not less than three years after final payment is made and all pending matters are closed.

NOTICE OF REQUIREMENT FOR AFFIRMATIVE ACTION TO ENSURE EQUAL EMPLOYMENT OPPORTUNITY

1. The Offeror's or Bidder's attention is called to the "Equal Opportunity Clause" and the "Standard Federal Equal Employment Opportunity Construction Contract Specifications" set forth herein.

2. The goals and timetables for minority and female participation, expressed in percentage terms for Contractor's aggregate workforce in each trade on all construction work in the covered area, are as follows:

Timetables

Goals for minority participation for each trade: 19.1%

Goals for female participation in each trade: 6.9%

These goals are applicable to all of Contractor's construction work (whether or not it is Federal or federally assisted) performed in the covered area. If Contractor performs construction work in a geographical area located outside of the covered area, it shall apply the goals established for such geographical area where the work is actually performed. With regard to this second area, Contractor also is subject to the goals for both its federally involved and nonfederally involved construction.

Contractor's compliance with the Executive Order and the regulations in 41 CFR Part 60-4 shall be based on its implementation of the Equal Opportunity Clause, specific affirmative action obligations required by the specifications set forth in 41 CFR 60-4.3(a) and its efforts to meet the goals. The hours of minority and female employment and training must be substantially uniform throughout the length of the contract, and in each trade, and Contractor shall make a good faith effort to employ minorities and women evenly on each of its projects. The transfer of minority or female employees or trainees from Contractor to Contractor or from project to project for the sole purpose of meeting Contractor's goals shall be a violation of the contract, the Executive Order and the regulations in 41 CFR Part 60-4. Compliance with the goals will be measured against the total work hours performed.

3. Contractor shall provide written notification to the Director of the Office of Federal Contract Compliance Programs (OFCCP) within 10 working days of award of any construction subcontract in excess of $10,000 at any tier for construction work under the contract resulting from this solicitation. The notification shall list the name, address, and telephone number of the subcontractor; employer identification number of the subcontractor; estimated dollar amount of the subcontract; estimated starting and completion dates of the subcontract; and the geographical area in which the subcontract is to be performed.

4. As used in this notice and in the contract resulting from this solicitation, the "covered area" is Texas, Midland County, City of Midland.

BREACH OF CONTRACT TERMS

Any violation or breach of terms of this contract on the part of Contractor or its subcontractors may result in the suspension or termination of this contract or such other action that may be necessary to enforce the rights of the parties of this agreement.

Owner will provide Contractor written notice that describes the nature of the breach and corrective actions Contractor must undertake in order to avoid termination of the contract. Owner reserves the right to withhold payments to Contractor until such time Contractor corrects the breach or the Owner elects to terminate the contract. The Owner's notice will identify a specific date by which Contractor must correct the breach. Owner may proceed with termination of the contract if Contractor fails to correct the breach by the deadline indicated in the Owner's notice.

The duties and obligations imposed by the Contract Documents and the rights and remedies available thereunder are in addition to, and not a limitation of, any duties, obligations, rights and remedies otherwise imposed or available by law.

BUY AMERICAN PREFERENCE

SOURCE

Title 49 USC § 50101

Executive Order 14005, *Ensuring the Future is Made in All of America by All of America's Workers*

Bipartisan Infrastructure Law (Pub. L. No. 117-58), Build America, Buy America (BABA)

APPLICABILITY

The Buy American Preference incorporates statutory requirements and policies outlined in the in 49 USC § 50101, Executive Order 14005, and BABA.

Section 50101 of 49 USC requires that all steel and manufactured goods used on AIP projects be produced in the United States. This section also gives the FAA the ability to issue a waiver to a Sponsor to use non-domestic material on an AIP funded project subject to meeting certain conditions. A Sponsor may request that the FAA issue a waiver from the Buy American Preference requirements if the FAA finds that:

1) Applying the provision is not in the public interest.
2) The steel or manufactured goods are not available in sufficient quantity or quality in the United States.

3) The cost of components and subcomponents produced in the United States is more than 60 percent of the total components of a facility or equipment, and final assembly has taken place in the United States. Items that have an FAA standard specification item number (such as specific airport lighting equipment) are considered the equipment.
4) Applying this provision would increase the cost of the overall project by more than 25 percent.

Executive Order 14005 advances the Administration's priority to use terms and conditions of Federal financial assistance awards to maximize the use of goods, products, and materials produced in, and services offered in, the United States. The Order directs, to the extent appropriate and consistent with applicable law, agencies shall partner with the Hollings Manufacturing Extension Partnership (MEP) to conduct supplier scouting in order to identify American companies that are able to produce goods, products, and materials in the United States that meet Federal procurement needs, prior to consideration of using non-domestic products.

The Bipartisan Infrastructure Law, Build America, Buy America (BABA) Act strengthens Made in America Laws and bolsters America's industrial base, protects national security, and supports high-paying jobs. Under BABA, iron, steel and certain construction materials are required to be 100% produced in the United States.

Under the Bipartisan Infrastructure Law (Pub. L. No. 117-58) BABA three waivers are available for iron and steel, manufactured products, and construction materials when a Federal agency finds that –

1) Applying the domestic content procurement preference would be inconsistent with the public interest (a "public interest waiver");
2) Types of iron, steel, manufactured products, or construction materials are not produced in the United States in sufficient and reasonably available quantities or of a satisfactory quality (a "nonavailability waiver"); or
3) The inclusion of iron, steel, manufactured products, or construction materials produced in the United States will increase the cost of the overall project by more than 25 percent (an "unreasonable cost waiver").

BABA defines construction materials, items that are or consists primarily of non-ferrous metals, plastic and polymer-based products (including polyvinylchloride, composite building materials, and polymers used in fiber optic cables), glass (including optic glass), lumber or drywall.

Items that consist of two or more of the aforementioned materials that have been combined together through a manufacturing process, and items that include at least one of the listed materials combined with a material that is not listed through a manufacturing process, should be treated as manufactured products, rather than as construction materials. For example, a plastic framed sliding window should be treated as a manufactured product while plate glass should be treated as a construction material**.**

The Buy America Preference requirements flow down from the Sponsor to first tier contractors, who are responsible for ensuring that lower tier contractors and subcontractors are also in compliance.

Note: The Buy American Preference does not apply to temporary equipment a contractor uses as a tool of its trade and which does not remain as part of the project.

Required Documentation

The FAA Buy American Requests. All applications (requests) for an FAA Buy American Preference Waiver includes, at minimum, a completed Content Percentage Worksheet and Final Assembly Questionnaire. Additional information may be requested from the applicant by the FAA. Airport Sponsors, consultants, construction contractors, or equipment manufacturers are responsible for completing and submitting waiver applications. The FAA is unable to make a determination on waiver requests with incomplete information. Sponsors must confirm with the bidder or offeror to assess the adequacy of the waiver request and associated information prior to forwarding a waiver request to the FAA for action. All FAA waivers forms are available from the FAA Buy American Requirements webpage.

Proprietary Confidentiality. Exemption 4 of the Freedom of Information Act protects "trade secrets and commercial or financial information obtained from a person that is privileged or confidential. Proprietary manufacturing and design information submitted to the Federal Aviation Administration for the purposes of receiving a Buy American Waiver shall not be disclosed outside the FAA. The FAA will provide a written notification to the Airport Sponsor, manufacturer(s), contractor(s) or supplier(s) when a waiver determination is complete.

Timing of Waiver Requests. Sponsors desiring a Type 2 waiver should submit their waiver request, with justification, *before* issuing a solicitation for bids or a request for proposal for a project.

The Sponsor must submit a Type 2, Type 3, or Type 4 waiver request *prior* to executing the contract. The FAA will generally not consider waiver requests after execution of the contract except where extraordinary and extenuating circumstances exist.

The Buy American Notice of Determination (NOD) Process. The FAA Reauthorization Act of 2018 requires that all approved waivers must be posted to the FAA's website and remain posted for public comment for 10 days, before becoming effective. All FAA waivers must complete the NOD process. Sponsors are encouraged to wait until approved waivers become effective before executing AIP projects.

Buy American Conformance Lists. The FAA Office of Airports maintains listings of projects and products that have received a waiver from the Buy American Preference requirements for project specific and nationwide use. Each of these conformance lists is available online at www.faa.gov/airports/aip/buy_american/. Products listed on the FAA Nationwide Buy American Conformance list do not require additional submittal of domestic content information. Nationwide waivers expire five years from the date issued, unless revoked earlier by the FAA.

Facility Waiver Requests. For construction of a facility, the Sponsor may submit the waiver request after bid opening, but prior to contract execution. Examples of facility construction include terminal buildings, terminal renovation, and snow removal equipment buildings.

Contract Types –

Construction and Equipment – The Sponsor must meet the Buy American Preference requirements of 49 USC § 50101 and BABA for all AIP funded projects that require materials that are or consists primarily of iron, steel or manufactured goods and construction materials.

Professional Services – Professional service agreements (PSAs) do not normally result in a deliverable that meets the definition of a manufactured product. However, the emergence of various project delivery methods has created situations where task deliverables under a PSA may include

a manufactured product. If a PSA includes providing a manufactured good as a deliverable under the contract, the Sponsor must include the Buy American Preference provision in the agreement.

Property – Most land transactions do not involve acquiring a manufactured product. However, under certain circumstances, a property acquisition project could result in the installation of a manufactured product. For example, the installation of property fencing, gates, doors and locks, etc. represent manufactured products acquired under an AIP funded land project that must comply with Buy American Preferences.

Use of Provisions – No mandatory language provided. The following language is acceptable to the FAA and meets the intent of this requirement. If the Sponsor uses different language, the Sponsor's revised language must fully comply with 49 USC § 50101 and BABA.

There are two types of FAA Buy American certifications. The Sponsor must incorporate the appropriate certifications of compliance with FAA Buy American Preference in the solicitation:

- **Construction Projects** involving the replacement, rehabilitation, reconstruction of airfield surfaces such as on runways, taxiways, taxilanes, aprons, roadways, parking lots, etc. – Insert the Certificate of compliance to FAA Buy American Preference based on Construction Projects.
- **Equipment and Buildings Projects** involving and including the acquisition of equipment such as snow removal equipment, navigational aids, wind cones, and the construction of buildings such as hangars, terminal development, lighting vaults, aircraft rescue & firefighting buildings, etc. - Insert the Certificate of Compliance with FAA Buy American Preference Based on Equipment/Building Projects.

MODEL SOLICITATION CLAUSES

Certification of Compliance with FAA Buy American Preference Statement

FAA BUY AMERICAN PREFERENCE

Contractor certifies that its bid/offer is in compliance with 49 USC § 50101, BABA and other related Made in America Laws,[1] U.S. statutes, guidance, and FAA policies, which provide that Federal funds may not be obligated unless all iron, steel and manufactured goods used in AIP funded projects are produced in the United States, unless the Federal Aviation Administration has issued a waiver for the product; the product is listed as an Excepted Article, Material Or Supply in Federal Acquisition Regulation subpart 25.108; or is included in the FAA Nationwide Buy American Waivers Issued list.

The bidder or offeror must complete and submit the certification of compliance with FAA's Buy American Preference, BABA and Made in America laws included herein with their bid or offer. The

[1] Per Executive Order 14005 "Made in America Laws" means all statutes, regulations, rules, and Executive Orders relating to federal financial assistance awards or federal procurement, including those that refer to "Buy America" or "Buy American," that require, or provide a preference for, the purchase or acquisition of goods, products, or materials produced in the United States, including iron, steel, and manufactured products offered in the United States.

Airport Sponsor/Owner will reject as nonresponsive any bid or offer that does not include a completed certification of compliance with FAA's Buy American Preference and BABA.

The bidder or offeror certifies that all constructions materials, defined to mean an article, material, or supply other than an item of primarily iron or steel; a manufactured product; cement and cementitious materials; aggregates such as stone, sand, or gravel; or aggregate binding agents or additives that are or consist primarily of: non-ferrous metals; plastic and polymer-based products (including polyvinylchloride, composite building materials, and polymers used in fiber optic cables); glass (including optic glass); lumber; or drywall used in the project are manufactured in the U.S.

Certification of Compliance with FAA Buy American Preference – Construction Projects

As a matter of bid responsiveness, the bidder or offeror must complete, sign, date, and submit this certification statement with its proposal. The bidder or offeror must indicate how it intends to comply with 49 USC § 50101, BABA and other related Made in America Laws, U.S. statutes, guidance, and FAA policies, by selecting one of the following certification statements. These statements are mutually exclusive. Bidder must select one or the other (i.e., not both) by inserting a checkmark (✓) or the letter "X".

☒ Bidder or offeror hereby certifies that it will comply with 49 USC § 50101, BABA and other related U.S. statutes, guidance, and policies of the FAA by:

a) Only installing iron, steel and manufactured products produced in the United States;

b) Only installing construction materials defined as: an article, material, or supply – other than an item of primarily iron or steel; a manufactured product; cement and cementitious materials; aggregates such as stone, sand, or gravel; or aggregate binding agents or additives that are or consist primarily of non-ferrous metals; plastic and polymer-based products (including polyvinylchloride, composite building materials, and polymers used in fiber optic cables); glass (including optic glass); lumber or drywall that have been manufactured in the United States.

c) Installing manufactured products for which the Federal Aviation Administration (FAA) has issued a waiver as indicated by inclusion on the current FAA Nationwide Buy American Waivers Issued listing; or

d) Installing products listed as an Excepted Article, Material or Supply in Federal Acquisition Regulation Subpart 25.108.

By selecting this certification statement, the bidder or offeror agrees:

a) To provide to the Airport Sponsor or the FAA evidence that documents the source and origin of the iron, steel, and/or manufactured product.
b) To faithfully comply with providing U.S. domestic products.
c) To refrain from seeking a waiver request after establishment of the contract, unless extenuating circumstances emerge that the FAA determines justified.
d) Certify that all construction materials used in the project are manufactured in the U.S.

☐ The bidder or offeror hereby certifies it cannot comply with the 100 percent Buy American Preferences of 49 USC § 50101(a) but may qualify for a Type 3 or Type 4 waiver under 49 USC § 50101(b). By selecting this certification statement, the apparent bidder or offeror with the apparent low bid agrees:

a) To the submit to the Airport Sponsor or FAA within 15 calendar days of being selected as the responsive bidder, a formal waiver request and required documentation that supports the type of waiver being requested.
b) That failure to submit the required documentation within the specified timeframe is cause for a non-responsive determination that may result in rejection of the proposal.
c) To faithfully comply with providing U.S. domestic products at or above the approved U.S. domestic content percentage as approved by the FAA.

d) To furnish U.S. domestic product for any waiver request that the FAA rejects.
e) To refrain from seeking a waiver request after establishment of the contract, unless extenuating circumstances emerge that the FAA determines justified.

Required Documentation

Type 2 Waiver (Nonavailability) - The iron, steel, manufactured goods or construction materials or manufactured goods are not available in sufficient quantity or quality in the United States. The required documentation for the Nonavailability waiver is

a) Completed Content Percentage Worksheet and Final Assembly Questionnaire
b) Record of thorough market research, consideration where appropriate of qualifying alternate items, products, or materials including;
c) A description of the market research activities and methods used to identify domestically manufactured items capable of satisfying the requirement, including the timing of the research and conclusions reached on the availability of sources.

Type 3 Waiver – The cost of components and subcomponents produced in the United States is more than 60 percent of the cost of all components and subcomponents of the "facility/project." The required documentation for a Type 3 waiver is:

a) Completed Content Percentage Worksheet and Final Assembly Questionnaire including;
b) Listing of all manufactured products that are not comprised of 100 percent U.S. domestic content (excludes products listed on the FAA Nationwide Buy American Waivers Issued listing and products excluded by Federal Acquisition Regulation Subpart 25.108; products of unknown origin must be considered as non-domestic products in their entirety).
c) Cost of non-domestic components and subcomponents, excluding labor costs associated with final assembly and installation at project location.
d) Percentage of non-domestic component and subcomponent cost as compared to total "facility" component and subcomponent costs, excluding labor costs associated with final assembly and installation at project location.

Type 4 Waiver (Unreasonable Costs) - Applying this provision for iron, steel, manufactured goods or construction materials would increase the cost of the overall project by more than 25 percent. The required documentation for this waiver is:

a) A completed Content Percentage Worksheet and Final Assembly Questionnaire from
b) At minimum two comparable equal bids and/or offers;
c) Receipt or record that demonstrates that supplier scouting called for in Executive Order 14005, indicates that no domestic source exists for the project and/or component;
d) Completed waiver applications for each comparable bid and/or offer.

False Statements: Per 49 USC § 47126, this certification concerns a matter within the jurisdiction of the Federal Aviation Administration and the making of a false, fictitious, or fraudulent certification may render the maker subject to prosecution under Title 18, United States Code.

July 17, 2024
Date

Signature

Jones Bros Dirt & Paving Contractors Inc
Company Name

General Manager
Title

GENERAL CIVIL RIGHTS PROVISIONS

In all its activities within the scope of its airport program, the Contractor agrees to comply with pertinent statutes, Executive Orders, and such rules as identified in Title VI List of Pertinent Nondiscrimination Acts and Authorities to ensure that no person shall, on the grounds of race, color, national origin (including limited English proficiency), creed, sex (including sexual orientation and gender identity), age, or disability be excluded from participating in any activity conducted with or benefiting from Federal assistance.

This provision is in addition to that required by Title VI of the Civil Rights Act of 1964.

Specific Clause used for General Contract Agreements

The above provision binds Contractor and subcontractors from the bid solicitation period through the completion of the contract.

Title VI Solicitation Notice:

The Midland International Air & Space Port, in accordance with the provisions of Title VI of the Civil Rights Act of 1964 (78 Stat. 252, 42 USC §§ 2000d to 2000d-4) and the Regulations, hereby notifies all bidders or offerors that it will affirmatively ensure that for any contract entered into pursuant to this advertisement, select businesses, or disadvantaged business enterprises will be afforded full and fair opportunity to submit bids in response to this invitation and no businesses will be discriminated against on the grounds of race, color, national origin (including limited English proficiency), creed, sex (including sexual orientation and gender identity), age, or disability in consideration for an award.

Title VI List of Pertinent Nondiscrimination Acts and Authorities

During the performance of this contract, Contractor, for itself, its assignees, and successors in interest (hereinafter referred to as the "Contractor") agrees to comply with the following non-discrimination statutes and authorities; including but not limited to:

- Title VI of the Civil Rights Act of 1964 (42 USC § 2000d *et seq*., 78 stat. 252) (prohibits discrimination on the basis of race, color, national origin);
- 49 CFR part 21 (Non-discrimination in Federally-Assisted programs of the Department of Transportation—Effectuation of Title VI of the Civil Rights Act of 1964);
- The Uniform Relocation Assistance and Real Property Acquisition Policies Act of 1970, (42 USC § 4601) (prohibits unfair treatment of persons displaced or whose property has been acquired because of Federal or Federal-aid programs and projects);
- Section 504 of the Rehabilitation Act of 1973 (29 USC § 794 *et seq*.), as amended (prohibits discrimination on the basis of disability); and 49 CFR part 27 (Nondiscrimination on the Basis of Disability in Programs or Activities Receiving Federal Financial Assistance);
- The Age Discrimination Act of 1975, as amended (42 USC § 6101 *et seq*.) (prohibits discrimination on the basis of age);
- Airport and Airway Improvement Act of 1982 (49 USC § 47123), as amended (prohibits discrimination based on race, creed, color, national origin, or sex);
- The Civil Rights Restoration Act of 1987 (PL 100-259) (broadened the scope, coverage and applicability of Title VI of the Civil Rights Act of 1964, the Age Discrimination Act of 1975 and

Section 504 of the Rehabilitation Act of 1973, by expanding the definition of the terms "programs or activities" to include all of the programs or activities of the Federal-aid recipients, sub-recipients and contractors, whether such programs or activities are Federally funded or not);

- Titles II and III of the Americans with Disabilities Act of 1990 (42 USC § 12101, et seq) (prohibit discrimination on the basis of disability in the operation of public entities, public and private transportation systems, places of public accommodation, and certain testing entities) as implemented by U.S. Department of Transportation regulations at 49 CFR parts 37 and 38;
- The Federal Aviation Administration's Nondiscrimination statute (49 USC § 47123) (prohibits discrimination on the basis of race, color, national origin, and sex);
- Executive Order 12898, Federal Actions to Address Environmental Justice in Minority Populations and Low-Income Populations (ensures nondiscrimination against minority populations by discouraging programs, policies, and activities with disproportionately high and adverse human health or environmental effects on minority and low-income populations);
- Executive Order 13166, Improving Access to Services for Persons with Limited English Proficiency, and resulting agency guidance, national origin discrimination includes discrimination because of limited English proficiency (LEP). To ensure compliance with Title VI, you must take reasonable steps to ensure that LEP persons have meaningful access to your programs 70 Fed. Reg. 74087 (2005);
- Title IX of the Education Amendments of 1972, as amended, which prohibits you from discriminating because of sex in education programs or activities (20 USC § 1681, et seq).

Compliance with Nondiscrimination Requirements:

During the performance of this contract, Contractor, for itself, its assignees, and successors in interest (hereinafter referred to as the "Contractor"), agrees as follows:

1. **Compliance with Regulations:** Contractor (hereinafter includes consultants) will comply with the Title VI List of Pertinent Nondiscrimination Acts and Authorities, as they may be amended from time to time, which are herein incorporated by reference and made a part of this contract.
2. **Nondiscrimination:** Contractor, with regard to the work performed by it during the contract, will not discriminate on the grounds of race, color, national origin (including limited English proficiency), creed, sex (including sexual orientation and gender identity), age, or disability in the selection and retention of subcontractors, including procurements of materials and leases of equipment. Contractor will not participate directly or indirectly in the discrimination prohibited by the Nondiscrimination Acts and Authorities, including employment practices when the contract covers any activity, project, or program set forth in Appendix B of 49 CFR part 21.
3. **Solicitations for Subcontracts, including Procurements of Materials and Equipment:** In all solicitations, either by competitive bidding or negotiation made by Contractor for work to be performed under a subcontract, including procurements of materials, or leases of equipment, each potential subcontractor or supplier will be notified by Contractor of Contractor's obligations under this contract and the Nondiscrimination Acts and Authorities on the grounds of race, color, or national origin.
4. **Information and Reports:** Contractor will provide all information and reports required by the Acts, the Regulations, and directives issued pursuant thereto and will permit access to its books, records, accounts, other sources of information, and its facilities as may be determined by the Sponsor or the Federal Aviation Administration to be pertinent to ascertain compliance

with such Nondiscrimination Acts and Authorities and instructions. Where any information required of a contractor is in the exclusive possession of another who fails or refuses to furnish the information, Contractor will so certify to the Sponsor or the Federal Aviation Administration, as appropriate, and will set forth what efforts it has made to obtain the information.

5. **Sanctions for Noncompliance:** In the event of a Contractor's noncompliance with the non-discrimination provisions of this contract, the Sponsor will impose such contract sanctions as it or the Federal Aviation Administration may determine to be appropriate, including, but not limited to:

    a. Withholding payments to Contractor under the contract until Contractor complies; and/or

    b. Cancelling, terminating, or suspending a contract, in whole or in part.

6. **Incorporation of Provisions:** Contractor will include the provisions of paragraphs one through six in every subcontract, including procurements of materials and leases of equipment, unless exempt by the Acts, the Regulations, and directives issued pursuant thereto. Contractor will take action with respect to any subcontract or procurement as the Sponsor or the Federal Aviation Administration may direct as a means of enforcing such provisions including sanctions for noncompliance. Provided, that if Contractor becomes involved in, or is threatened with litigation by a subcontractor, or supplier because of such direction, Contractor may request the Sponsor to enter into any litigation to protect the interests of the Sponsor. In addition, Contractor may request the United States to enter into the litigation to protect the interests of the United States.

CLEAN AIR AND WATER POLLUTION CONTROL

Contractor agrees to comply with all applicable standards, orders, and regulations issued pursuant to the Clean Air Act (42 USC §§ 7401-7671q) and the Federal Water Pollution Control Act as amended (33 USC §§ 1251-1387). Contractor agrees to report any violation to the Owner immediately upon discovery. The Owner assumes responsibility for notifying the Environmental Protection Agency (EPA) and the Federal Aviation Administration.

Contractor must include this requirement in all subcontracts that exceed $150,000.

CONTRACT WORKHOURS AND SAFETY STANDARDS ACT REQUIREMENTS

1. Overtime Requirements.

No contractor or subcontractor contracting for any part of the contract work which may require or involve the employment of laborers or mechanics shall require or permit any such laborer or mechanic, including watchmen and guards, in any workweek in which he or she is employed on such work to work in excess of forty hours in such workweek unless such laborer or mechanic receives compensation at a rate not less than one and one-half times the basic rate of pay for all hours worked in excess of forty hours in such workweek.

2. Violation; Liability for Unpaid Wages; Liquidated Damages.

In the event of any violation of the clause set forth in paragraph (1) of this clause, Contractor and any subcontractor responsible therefor shall be liable for the unpaid wages. In addition, such contractor and subcontractor shall be liable to the United States (in the case of work done under contract for the District of Columbia or a territory, to such District or to such territory), for liquidated damages. Such liquidated damages shall be computed with respect to each individual laborer or mechanic, including watchmen and guards, employed in violation of the clause set forth in paragraph (1) of this clause, in the sum of $29 for each calendar day on which such individual was required or permitted to work in excess of the standard workweek of forty hours without payment of the overtime wages required by the clause set forth in paragraph (1) of this clause.

3. Withholding for Unpaid Wages and Liquidated Damages.

The Federal Aviation Administration (FAA) or the Owner shall upon its own action or upon written request of an authorized representative of the Department of Labor withhold or cause to be withheld, from any moneys payable on account of work performed by Contractor or subcontractor under any such contract or any other Federal contract with the same prime contractor, or any other federally-assisted contract subject to the Contract Work Hours and Safety Standards Act, which is held by the same prime contractor, such sums as may be determined to be necessary to satisfy any liabilities of such contractor or subcontractor for unpaid wages and liquidated damages as provided in the clause set forth in paragraph (2) of this clause.

4. Subcontractors.

Contractor or subcontractor shall insert in any subcontracts the clauses set forth in paragraphs (1) through (4) and also a clause requiring the subcontractor to include these clauses in any lower tier subcontracts. The prime contractor shall be responsible for compliance by any subcontractor or lower tier subcontractor with the clauses set forth in paragraphs (1) through (4) of this clause.

COPELAND "ANTI-KICKBACK" ACT

Contractor must comply with the requirements of the Copeland "Anti-Kickback" Act (18 USC 874 and 40 USC 3145), as supplemented by Department of Labor regulation 29 CFR part 3. Contractor and subcontractors are prohibited from inducing, by any means, any person employed on the project to give up any part of the compensation to which the employee is entitled. Contractor and each Subcontractor must submit to the Owner, a weekly statement on the wages paid to each employee performing on covered work during the prior week. Owner must report any violations of the Act to the Federal Aviation Administration.

DAVIS-BACON REQUIREMENTS

1. Minimum Wages.

(i) All laborers and mechanics employed or working upon the site of the work will be paid unconditionally and not less often than once a week, and without subsequent deduction or rebate on any account (except such payroll deductions as are permitted by the Secretary of Labor under the Copeland Act (29 CFR Part 3)), the full amount of wages and bona fide fringe benefits (or cash equivalent thereof) due at time of

payment computed at rates not less than those contained in the wage determination of the Secretary of Labor which is attached hereto and made a part hereof, regardless of any contractual relationship which may be alleged to exist between Contractor and such laborers and mechanics.

Contributions made or costs reasonably anticipated for bona fide fringe benefits under section 1(b)(2) of the Davis-Bacon Act on behalf of laborers or mechanics are considered wages paid to such laborers or mechanics, subject to the provisions of paragraph (1)(iv) of this section; also, regular contributions made or costs incurred for more than a weekly period (but not less often than quarterly) under plans, funds, or programs which cover the particular weekly period, are deemed to be constructively made or incurred during such weekly period. Such laborers and mechanics shall be paid the appropriate wage rate and fringe benefits on the wage determination for the classification of work actually performed, without regard to skill, except as provided in 29 CFR § 5.5(a)(4). Laborers or mechanics performing work in more than one classification may be compensated at the rate specified for each classification for the time actually worked therein: *Provided,* that the employer's payroll records accurately set forth the time spent in each classification in which work is performed. The wage determination (including any additional classification and wage rates conformed under (1)(ii) of this section) and the Davis-Bacon poster (WH-1321) shall be posted at all times by Contractor and its subcontractors at the site of the work in a prominent and accessible place where it can easily be seen by the workers.

(ii)(A) The contracting officer shall require that any class of laborers or mechanics, including helpers, which is not listed in the wage determination and which is to be employed under the contract shall be classified in conformance with the wage determination. The contracting officer shall approve an additional classification and wage rate and fringe benefits therefore only when the following criteria have been met:

(1) The work to be performed by the classification requested is not performed by a classification in the wage determination;

(2) The classification is utilized in the area by the construction industry; and

(3) The proposed wage rate, including any bona fide fringe benefits, bears a reasonable relationship to the wage rates contained in the wage determination.

(B) If Contractor and the laborers and mechanics to be employed in the classification (if known), or their representatives, and the contracting officer agree on the classification and wage rate (including the amount designated for fringe benefits where appropriate), a report of the action taken shall be sent by the contracting officer to the Administrator of the Wage and Hour Division, U.S. Department of Labor, Washington, DC 20210. The Administrator, or an authorized representative, will approve, modify, or disapprove every additional classification action within 30 days of receipt and so advise the contracting officer or will notify the contracting officer within the 30-day period that additional time is necessary.

(C) In the event Contractor, the laborers, or mechanics to be employed in the classification, or their representatives, and the contracting officer do not agree on the proposed classification and wage rate (including the amount designated for fringe benefits, where appropriate), the contracting officer shall refer the questions, including the views of all interested parties and the recommendation of the contracting officer, to the Administrator for determination. The Administrator, or an authorized representative, will issue a determination within 30 days of receipt and so advise the contracting officer or will notify the contracting officer within the 30-day period that additional time is necessary.

(D) The wage rate (including fringe benefits where appropriate) determined pursuant to subparagraphs (1)(ii) (B) or (C) of this paragraph, shall be paid to all workers performing work in the classification under this contract from the first day on which work is performed in the classification.

(iii) Whenever the minimum wage rate prescribed in the contract for a class of laborers or mechanics includes a fringe benefit which is not expressed as an hourly rate, Contractor shall either pay the benefit as stated in the wage determination or shall pay another bona fide fringe benefit or an hourly cash equivalent thereof.

(iv) If Contractor does not make payments to a trustee or other third person, Contractor may consider as part of the wages of any laborer or mechanic the amount of any costs reasonably anticipated in providing bona fide fringe benefits under a plan or program, *Provided,* that the Secretary of Labor has found, upon the written request of Contractor, that the applicable standards of the Davis-Bacon Act have been met. The Secretary of Labor may require Contractor to set aside in a separate account assets for the meeting of obligations under the plan or program.

2. Withholding. The Federal Aviation Administration or the Sponsor shall upon its own action or upon written request of an authorized representative of the Department of Labor withhold or cause to be withheld from Contractor under this contract or any other Federal contract with the same prime contractor, or any other federally-assisted contract subject to Davis-Bacon prevailing wage requirements, which is held by the same prime contractor, so much of the accrued payments or advances as may be considered necessary to pay laborers and mechanics, including apprentices, trainees, and helpers, employed by Contractor or any subcontractor the full amount of wages required by the contract. In the event of failure to pay any laborer or mechanic, including any apprentice, trainee, or helper, employed or working on the site of the work, all or part of the wages required by the contract, the Federal Aviation Administration may, after written notice to Contractor, Sponsor, Applicant, or Owner, take such action as may be necessary to cause the suspension of any further payment, advance, or guarantee of funds until such violations have ceased.

3. Payrolls and Basic Records.

(i) Payrolls and basic records relating thereto shall be maintained by Contractor during the course of the work and preserved for a period of three years thereafter for all laborers and mechanics working at the site of the work. Such records shall contain the name, address, and social security number of each such worker; his or her correct classification; hourly rates of wages paid (including rates of contributions or costs anticipated for bona fide fringe benefits or cash equivalents thereof of the types described in 1(b)(2)(B) of the Davis-Bacon Act); daily and weekly number of hours worked; deductions made; and actual wages paid. Whenever the Secretary of Labor has found under 29 CFR 5.5(a)(1)(iv) that the wages of any laborer or mechanic include the amount of any costs reasonably anticipated in providing benefits under a plan or program described in section 1(b)(2)(B) of the Davis-Bacon Act, Contractor shall maintain records that show that the commitment to provide such benefits is enforceable, that the plan or program is financially responsible, and that the plan or program has been communicated in writing to the laborers or mechanics affected, and records which show the costs anticipated or the actual costs incurred in providing such benefits. Contractors employing apprentices or trainees under approved programs shall maintain written evidence of the registration of apprenticeship programs and certification of trainee programs, the registration of the apprentices and trainees, and the ratios and wage rates prescribed in the applicable programs.

(ii)(A) Contractor shall submit weekly for each week in which any contract work is performed a copy of all payrolls to the Federal Aviation Administration if the agency is a party to the contract, but if the agency is not such a party, Contractor will submit the payrolls to the applicant, Sponsor, or Owner, as the case may be, for transmission to the Federal Aviation Administration. The payrolls submitted shall set out accurately and completely all of the information required to be maintained under 29 CFR § 5.5(a)(3)(i), except that full social security numbers and home addresses shall not be included on weekly transmittals. Instead the payrolls shall only need to include an individually identifying number for each employee (*e.g.,* the last four digits of the employee's social security number). The required weekly payroll information may be submitted in any form desired. Optional Form WH–347 is available for this purpose from the Wage and Hour Division Web site at https://www.dol.gov/agencies/whd/government-contracts/construction/payroll-certification or its successor site. The prime contractor is responsible for the submission of copies of payrolls by all subcontractors. Contractors and subcontractors shall maintain the full social security number and current address of each covered worker and shall provide them upon request to the Federal Aviation Administration if the agency is a party to the contract, but if the agency is not such a party, Contractor will submit them to the applicant, Sponsor, or Owner, as the case may be, for transmission to the Federal Aviation Administration, Contractor, or the Wage and Hour Division of the Department of Labor for purposes of an investigation or audit of compliance with prevailing wage requirements. It is not a violation of this section for a prime contractor to require a subcontractor to provide addresses and social security numbers to the prime contractor for its own records, without weekly submission to the sponsoring government agency (or the applicant, Sponsor, or Owner).

(B) Each payroll submitted shall be accompanied by a "Statement of Compliance," signed by Contractor or subcontractor or his or her agent who pays or supervises the payment of the persons employed under the contract and shall certify the following:

(1) That the payroll for the payroll period contains the information required to be provided under 29 CFR § 5.5(a)(3)(ii), the appropriate information is being maintained under 29 CFR § 5.5 (a)(3)(i), and that such information is correct and complete;

(2) That each laborer and mechanic (including each helper, apprentice, and trainee) employed on the contract during the payroll period has been paid the full weekly wages earned, without rebate, either directly or indirectly, and that no deductions have been made either directly or indirectly from the full wages earned, other than permissible deductions as set forth in Regulations, 29 CFR Part 3;

(3) That each laborer or mechanic has been paid not less than the applicable wage rates and fringe benefits or cash equivalents for the classification of work performed, as specified in the applicable wage determination incorporated into the contract.

(C) The weekly submission of a properly executed certification set forth on the reverse side of Optional Form WH-347 shall satisfy the requirement for submission of the "Statement of Compliance" required by paragraph (3)(ii)(B) of this section.

(D) The falsification of any of the above certifications may subject Contractor or subcontractor to civil or criminal prosecution under Section 1001 of Title 18 and Section 231 of Title 31 of the United States Code.

(iii) Contractor or subcontractor shall make the records required under paragraph (3)(i) of this section available for inspection, copying, or transcription by authorized representatives of the Sponsor, the Federal Aviation Administration, or the Department of Labor and shall permit such representatives to

interview employees during working hours on the job. If Contractor or subcontractor fails to submit the required records or to make them available, the Federal agency may, after written notice to Contractor, Sponsor, applicant, or Owner, take such action as may be necessary to cause the suspension of any further payment, advance, or guarantee of funds. Furthermore, failure to submit the required records upon request or to make such records available may be grounds for debarment action pursuant to 29 CFR § 5.12.

4. Apprentices and Trainees.

(i) Apprentices. Apprentices will be permitted to work at less than the predetermined rate for the work they performed when they are employed pursuant to and individually registered in a bona fide apprenticeship program registered with the U.S. Department of Labor, Employment and Training Administration, Office of Apprenticeship Training, Employer and Labor Services, or with a State Apprenticeship Agency recognized by the Office, or if a person is employed in his or her first 90 days of probationary employment as an apprentice in such an apprenticeship program, who is not individually registered in the program, but who has been certified by the Office of Apprenticeship Training, Employer and Labor Services or a State Apprenticeship Agency (where appropriate) to be eligible for probationary employment as an apprentice. The allowable ratio of apprentices to journeymen on the job site in any craft classification shall not be greater than the ratio permitted to Contractor as to the entire work force under the registered program. Any worker listed on a payroll at an apprentice wage rate, who is not registered or otherwise employed as stated above, shall be paid not less than the applicable wage rate on the wage determination for the classification of work actually performed. In addition, any apprentice performing work on the job site in excess of the ratio permitted under the registered program shall be paid not less than the applicable wage rate on the wage determination for the work actually performed. Where a contractor is performing construction on a project in a locality other than that in which its program is registered, the ratios and wage rates (expressed in percentages of the journeyman's hourly rate) specified in Contractor's or subcontractor's registered program shall be observed. Every apprentice must be paid at not less than the rate specified in the registered program for the apprentice's level of progress, expressed as a percentage of the journeymen hourly rate specified in the applicable wage determination. Apprentices shall be paid fringe benefits in accordance with the provisions of the apprenticeship program. If the apprenticeship program does not specify fringe benefits, apprentices must be paid the full amount of fringe benefits listed on the wage determination for the applicable classification. If the Administrator determines that a different practice prevails for the applicable apprentice classification, fringes shall be paid in accordance with that determination. In the event the Office of Apprenticeship Training, Employer and Labor Services, or a State Apprenticeship Agency recognized by the Office, withdraws approval of an apprenticeship program, Contractor will no longer be permitted to utilize apprentices at less than the applicable predetermined rate for the work performed until an acceptable program is approved.

(ii) Trainees. Except as provided in 29 CFR § 5.16, trainees will not be permitted to work at less than the predetermined rate for the work performed unless they are employed pursuant to and individually registered in a program which has received prior approval, evidenced by formal certification by the U.S. Department of Labor, Employment and Training Administration. The ratio of trainees to journeymen on the job site shall not be greater than permitted under the plan approved by the Employment and Training Administration. Every trainee must be paid at not less than the rate specified in the approved program for the trainee's level of progress, expressed as a percentage of the journeyman hourly rate specified in the applicable wage determination. Trainees shall be paid fringe benefits in accordance with the provisions

of the trainee program. If the trainee program does not mention fringe benefits, trainees shall be paid the full amount of fringe benefits listed on the wage determination unless the Administrator of the Wage and Hour Division determines that there is an apprenticeship program associated with the corresponding journeyman wage rate on the wage determination that provides for less than full fringe benefits for apprentices. Any employee listed on the payroll at a trainee rate that is not registered and participating in a training plan approved by the Employment and Training Administration shall be paid not less than the applicable wage rate on the wage determination for the classification of work actually performed. In addition, any trainee performing work on the job site in excess of the ratio permitted under the registered program shall be paid not less than the applicable wage rate on the wage determination for the work actually performed. In the event the Employment and Training Administration withdraws approval of a training program, Contractor will no longer be permitted to utilize trainees at less than the applicable predetermined rate for the work performed until an acceptable program is approved.

(iii) Equal Employment Opportunity. The utilization of apprentices, trainees, and journeymen under this part shall be in conformity with the equal employment opportunity requirements of Executive Order 11246, as amended, and 29 CFR Part 30.

5. Compliance with Copeland Act Requirements.

Contractor shall comply with the requirements of 29 CFR Part 3, which are incorporated by reference in this contract.

6. Subcontracts.

Contractor or subcontractor shall insert in any subcontracts the clauses contained in 29 CFR §§ 5.5(a)(1) through (10) and such other clauses as the Federal Aviation Administration may by appropriate instructions require, and also a clause requiring the subcontractors to include these clauses in any lower tier subcontracts. The prime contractor shall be responsible for the compliance by any subcontractor or lower tier subcontractor with all the contract clauses in 29 CFR § 5.5.

7. Contract Termination: Debarment.

A breach of the contract clauses in paragraph 1 through 10 of this section may be grounds for termination of the contract, and for debarment as a contractor and a subcontractor as provided in 29 CFR § 5.12.

8. Compliance with Davis-Bacon and Related Act Requirements.

All rulings and interpretations of the Davis-Bacon and Related Acts contained in 29 CFR Parts 1, 3, and 5 are herein incorporated by reference in this contract.

9. Disputes Concerning Labor Standards.

Disputes arising out of the labor standards provisions of this contract shall not be subject to the general disputes clause of this contract. Such disputes shall be resolved in accordance with the procedures of the Department of Labor set forth in 29 CFR Parts 5, 6, and 7. Disputes within the meaning of this clause include disputes between Contractor (or any of its subcontractors) and the contracting agency, the U.S. Department of Labor, or the employees or their representatives.

10. Certification of Eligibility.

(i) By entering into this contract, Contractor certifies that neither it (nor he or she) nor any person or firm who has an interest in Contractor's firm is a person or firm ineligible to be awarded Government contracts by virtue of section 3(a) of the Davis-Bacon Act or 29 CFR § 5.12(a)(1).

(ii) No part of this contract shall be subcontracted to any person or firm ineligible for award of a Government contract by virtue of section 3(a) of the Davis-Bacon Act or 29 CFR § 5.12(a)(1).

(iii) The penalty for making false statements is prescribed in the U.S. Criminal Code, 18 USC § 1001.

CERTIFICATION OF OFFEROR/BIDDER REGARDING DEBARMENT

By submitting a bid/proposal under this solicitation, the bidder or offeror certifies that neither it nor its principals are presently debarred or suspended by any Federal department or agency from participation in this transaction.

CERTIFICATION OF LOWER TIER CONTRACTORS REGARDING DEBARMENT

The successful bidder, by administering each lower tier subcontract that exceeds $25,000 as a "covered transaction," must confirm each lower tier participant of a "covered transaction" under the project is not presently debarred or otherwise disqualified from participation in this federally-assisted project. The successful bidder will accomplish this by:

1. Checking the System for Award Management at website: http://www.sam.gov.
2. Collecting a certification statement similar to the Certification of Offeror /Bidder Regarding Debarment, above.
3. Inserting a clause or condition in the covered transaction with the lower tier contract.

If the Federal Aviation Administration later determines that a lower tier participant failed to disclose to a higher tier participant that it was excluded or disqualified at the time it entered the covered transaction, the FAA may pursue any available remedies, including suspension and debarment of the non-compliant participant.

DISADVANTAGED BUSINESS ENTERPRISE

Bid Information Submitted as a matter of responsiveness:
The Owner's award of this contract is conditioned upon Bidder or Offeror satisfying the good faith effort requirements of 49 CFR § 26.53.

As a condition of responsiveness, the Bidder or Offeror must submit the following information with its proposal on the forms provided herein:

1) The names and addresses of Disadvantaged Business Enterprise (DBE) firms that will participate in the contract;
2) A description of the work that each DBE firm will perform;
3) The dollar amount of the participation of each DBE firm listed under (1);

4) Written statement from Bidder or Offeror that attests their commitment to use the DBE firm(s) listed under (1) to meet the Owner's project goal
5) Written confirmation from each listed DBE firm that it is participating in the contract in the kind and amount of work provided in the prime contractor's commitment; and
6) If Bidder or Offeror cannot meet the advertised project DBE goal, evidence of good faith efforts undertaken by the Bidder or Offeror as described in appendix A to 49 CFR part 26. The documentation of good faith efforts must include copies of each DBE and non-DBE subcontractor quote submitted to the bidder when a non-DBE subcontractor was selected over a DBE for work on the contract.

Bid Information submitted as a matter of responsibility:

The Owner's award of this contract is conditioned upon Bidder or Offeror satisfying the good faith effort requirements of 49 CFR § 26.53.

As a condition of responsibility, every Bidder or Offeror must submit the following information on the forms provided herein within five days after Bid Opening.

1) The names and addresses of Disadvantaged Business Enterprise (DBE) firms that will participate in the contract;
2) A description of the work that each DBE firm will perform;
3) The dollar amount of the participation of each DBE firm listed under (1);
4) Written statement from Bidder or Offeror that attests their commitment to use the DBE firm(s) listed under (1) to meet the Owner's project goal;
5) Written confirmation from each listed DBE firm that it is participating in the contract in the kind and amount of work provided in the prime contractor's commitment; and
6) If Bidder or Offeror cannot meet the advertised project DBE goal, evidence of good faith efforts undertaken by the Bidder or Offeror as described in appendix A to 49 CFR part 26. The documentation of good faith efforts must include copies of each DBE and non-DBE subcontractor quote submitted to the bidder when a non-DBE subcontractor was selected over a DBE for work on the contract.

Contract Assurance (49 CFR § 26.13)

Contractor, subrecipient or subcontractor shall not discriminate on the basis of race, color, national origin, or sex in the performance of this contract. Contractor shall carry out applicable requirements of 49 CFR part 26 in the award and administration of DOT-assisted contracts. Failure by Contractor to carry out these requirements is a material breach of this contract, which may result in the termination of this contract or such other remedy as the recipient deems appropriate, which may include, but is not limited to:

1) Withholding monthly progress payments;
2) Assessing sanctions;
3) Liquidated damages; and/or
4) Disqualifying Contractor from future bidding as non-responsible.

Prompt Payment (49 CFR § 26.29) –
The prime contractor agrees to pay each subcontractor under this prime contract for satisfactory performance of its contract no later than 30 days from the receipt of each payment the prime contractor receives from City of Midland, Texas. The prime contractor agrees further to return retainage payments to each subcontractor within 30 days after the subcontractor's work is satisfactorily completed. Any delay or postponement of payment from the above-referenced time frame may occur only for good cause following written approval of the City of Midland, Texas. This clause applies to both DBE and non-DBE subcontractors.

Termination of DBE Subcontracts (49 CFR § 26.53(f)) –
The prime contractor must not terminate a DBE subcontractor listed in response to this Bid Proposal (or an approved substitute DBE firm) without prior written consent of City of Midland, Texas. This includes, but is not limited to, instances in which the prime contractor seeks to perform work originally designated for a DBE subcontractor with its own forces or those of an affiliate, a non-DBE firm, or with another DBE firm.

The prime contractor shall utilize the specific DBEs listed to perform the work and supply the materials for which each is listed unless Contractor obtains written consent City of Midland, Texas. Unless City of Midland, Texas consent is provided, the prime contractor shall not be entitled to any payment for work or material unless it is performed or supplied by the listed DBE.

City of Midland, Texas may provide such written consent only if City of Midland, Texas agrees, for reasons stated in the concurrence document, that the prime contractor has good cause to terminate the DBE firm. For purposes of this paragraph, good cause includes the circumstances listed in 49 CFR §26.53.

Before transmitting to City of Midland, Texas its request to terminate and/or substitute a DBE subcontractor, the prime contractor must give notice in writing to the DBE subcontractor, with a copy to City of Midland, Texas, of its intent to request to terminate and/or substitute, and the reason for the request.

The prime contractor must give the DBE five days to respond to the prime contractor's notice and advise City of Midland, Texas and Contractor of the reasons, if any, why it objects to the proposed termination of its subcontract and why City of Midland, Texas should not approve the prime contractor's action. If required in a particular case as a matter of public necessity (e.g., safety), City of Midland, Texas may provide a response period shorter than five days.

In addition to post-award terminations, the provisions of this section apply to preaward deletions of or substitutions for DBE firms put forward by offerors in negotiated procurements.

TEXTING WHEN DRIVING

In accordance with Executive Order 13513, "Federal Leadership on Reducing Text Messaging While Driving," (10/1/2009) and DOT Order 3902.10, "Text Messaging While Driving," (12/30/2009), the Federal Aviation Administration encourages recipients of Federal grant funds to adopt and enforce safety policies that decrease crashes by distracted drivers, including policies to ban text messaging while driving when performing work related to a grant or subgrant.

In support of this initiative, the Owner encourages Contractor to promote policies and initiatives for its employees and other work personnel that decrease crashes by distracted drivers, including policies that ban text messaging while driving motor vehicles while performing work activities associated with the

project. Contractor must include the substance of this clause in all sub-tier contracts exceeding $10,000 that involve driving a motor vehicle in performance of work activities associated with the project.

PROHIBITION ON CERTAIN TELECOMMUNICATIONS AND VIDEO SURVEILLANCE SERVICES OR EQUIPMENT

Contractor and Subcontractor agree to comply with mandatory standards and policies relating to use and procurement of certain telecommunications and video surveillance services or equipment in compliance with the National Defense Authorization Act.

EQUAL OPPORTUNITY CLAUSE

During the performance of this contract, Contractor agrees as follows:

(1) Contractor will not discriminate against any employee or applicant for employment because of race, color, religion, sex, sexual orientation, gender identity, or national origin. Contractor will take affirmative action to ensure that applicants are employed, and that employees are treated during employment, without regard to their race, color, religion, sex, sexual orientation, gender identify, or national origin. Such action shall include, but not be limited to, the following: employment, upgrading, demotion, or transfer; recruitment or recruitment advertising; layoff, or termination; rates of pay or other forms of compensation; and selection for training, including apprenticeship. Contractor agrees to post in conspicuous places, available to employees and applicants for employment, notices to be provided setting forth the provisions of this nondiscrimination clause.

(2) Contractor will, in all solicitations or advertisements for employees placed by or on behalf of Contractor, state that all qualified applicants will receive consideration for employment without regard to race, color, religion, sex, sexual orientation, gender identity, or national origin.

(3) Contractor will not discharge or in any other manner discriminate against any employee or applicant for employment because such employee or applicant has inquired about, discussed, or disclosed the compensation of the employee or applicant or another employee or applicant. This provision shall not apply to instances in which an employee who has access to the compensation information of other employees or applicants as a part of such employee's essential job functions discloses the compensation of such other employees or applicants to individuals who do not otherwise have access to such information, unless such disclosure is in response to a formal complaint or charge, in furtherance of an investigation, proceeding, hearing, or action, including an investigation conducted by the employer, or is consistent with Contractor's legal duty to furnish information.

(4) Contractor will send to each labor union or representative of workers with which it has a collective bargaining agreement or other contract or understanding, a notice to be provided by the agency contracting officer, advising the labor union or workers' representative of Contractor's commitments under this section 202 of Executive Order 11246 of September 24, 1965, and shall post copies of the notice in conspicuous places available to employees and applicants for employment.

(5) Contractor will comply with all provisions of Executive Order 11246 of September 24, 1965, and of the rules, regulations, and relevant orders of the Secretary of Labor.

(6) Contractor will furnish all information and reports required by Executive Order 11246 of September 24, 1965, and by the rules, regulations, and orders of the Secretary of Labor, or pursuant thereto, and will permit access to his books, records, and accounts by the contracting agency and the Secretary of Labor for purposes of investigation to ascertain compliance with such rules, regulations, and orders.

(7) In the event of Contractor's noncompliance with the nondiscrimination clauses of this contract or with any such rules, regulations, or orders, this contract may be canceled, terminated, or suspended in whole or in part and Contractor may be declared ineligible for further Government contracts in accordance with procedures authorized in Executive Order 11246 of September 24, 1965, and such other sanctions may be imposed and remedies invoked as provided in Executive Order 11246 of September 24, 1965, or by rule, regulation, or order of the Secretary of Labor, or as otherwise provided by law.

(8) Contractor will include the provisions of paragraphs (1) through (8) in every subcontract or purchase order unless exempted by rules, regulations, or orders of the Secretary of Labor issued pursuant to section 204 of Executive Order 11246 of September 24, 1965, so that such provisions will be binding upon each subcontractor or vendor. Contractor will take such action with respect to any subcontract or purchase order as may be directed by the Secretary of Labor as a means of enforcing such provisions, including sanctions for noncompliance*: Provided,* however, that in the event Contractor becomes involved in, or is threatened with, litigation with a subcontractor or vendor as a result of such direction, Contractor may request the United States to enter into such litigation to protect the interests of the United States.

STANDARD FEDERAL EQUAL EMPLOYMENT OPPORTUNITY
CONSTRUCTION CONTRACT SPECIFICATIONS

1. As used in these specifications:

   a. "Covered area" means the geographical area described in the solicitation from which this contract resulted;

   b. "Director" means Director, Office of Federal Contract Compliance Programs (OFCCP), U.S. Department of Labor, or any person to whom the Director delegates authority;

   c. "Employer identification number" means the Federal social security number used on the Employer's Quarterly Federal Tax Return, U.S. Treasury Department Form 941;

   d. "Minority" includes:

      (1) Black (all persons having origins in any of the Black African racial groups not of Hispanic origin);

      (2) Hispanic (all persons of Mexican, Puerto Rican, Cuban, Central or South American, or other Spanish culture or origin, regardless of race);

      (3) Asian and Pacific Islander (all persons having origins in any of the original peoples of the Far East, Southeast Asia, the Indian Subcontinent, or the Pacific Islands); and

      (4) American Indian or Alaskan native (all persons having origins in any of the original peoples of North America and maintaining identifiable tribal affiliations through membership and participation or community identification).

2. Whenever Contractor, or any subcontractor at any tier, subcontracts a portion of the work involving any construction trade, it shall physically include in each subcontract in excess of $10,000 the provisions of these specifications and the Notice which contains the applicable goals for minority and female participation and which is set forth in the solicitations from which this contract resulted.

3. If Contractor is participating (pursuant to 41 CFR part 60-4.5) in a Hometown Plan approved by the U.S. Department of Labor in the covered area either individually or through an association, its affirmative action obligations on all work in the Plan area (including goals and timetables) shall be in accordance with that Plan for those trades which have unions participating in the Plan. Contractors must be able to demonstrate their participation in and compliance with the provisions of any such Hometown Plan. Each contractor or subcontractor participating in an approved plan is individually required to comply with its obligations under the EEO clause and to make a good faith effort to achieve each goal under the Plan in each trade in which it has employees. The overall good faith performance by other contractors or subcontractors toward a goal in an approved Plan does not excuse any covered contractor's or subcontractor's failure to take good faith efforts to achieve the Plan goals and timetables.

4. Contractor shall implement the specific affirmative action standards provided in paragraphs 7a through 7p of these specifications. The goals set forth in the solicitation from which this contract resulted are expressed as percentages of the total hours of employment and training of minority and female utilization Contractor should reasonably be able to achieve in each construction trade in which it has employees in the covered area. Covered construction contractors performing construction work in a geographical areas where they do not have a Federal or federally assisted construction contract shall apply the minority and female goals established for the geographical area where the work is being performed. Goals are published periodically in the Federal Register in notice form, and such notices may be obtained from any Office of Federal Contract Compliance Programs office or from Federal procurement contracting officers. Contractor is expected to make substantially uniform progress in meeting its goals in each craft during the period specified.

5. Neither the provisions of any collective bargaining agreement, nor the failure by a union with whom Contractor has a collective bargaining agreement, to refer either minorities or women shall excuse Contractor's obligations under these specifications, Executive Order 11246, or the regulations promulgated pursuant thereto.

6. In order for the nonworking training hours of apprentices and trainees to be counted in meeting the goals, such apprentices and trainees must be employed by Contractor during the training period, and Contractor must have made a commitment to employ the apprentices and trainees at the completion of their training, subject to the availability of employment opportunities. Trainees must be trained pursuant to training programs approved by the U.S. Department of Labor.

7. Contractor shall take specific affirmative actions to ensure equal employment opportunity. The evaluation of Contractor's compliance with these specifications shall be based upon its effort to achieve maximum results from its actions. Contractor shall document these efforts fully, and shall implement affirmative action steps at least as extensive as the following:

a. Ensure and maintain a working environment free of harassment, intimidation, and coercion at all sites, and in all facilities at which Contractor's employees are assigned to work. Contractor, where possible, will assign two or more women to each construction project. Contractor shall specifically

ensure that all foremen, superintendents, and other onsite supervisory personnel are aware of and carry out Contractor's obligation to maintain such a working environment, with specific attention to minority or female individuals working at such sites or in such facilities.

b. Establish and maintain a current list of minority and female recruitment sources, provide written notification to minority and female recruitment sources and to community organizations when Contractor or its unions have employment opportunities available, and maintain a record of the organizations' responses.

c. Maintain a current file of the names, addresses, and telephone numbers of each minority and female off-the-street applicant and minority or female referral from a union, a recruitment source, or community organization and of what action was taken with respect to each such individual. If such individual was sent to the union hiring hall for referral and was not referred back to Contractor by the union or, if referred, not employed by Contractor, this shall be documented in the file with the reason therefor, along with whatever additional actions Contractor may have taken.

d. Provide immediate written notification to the Director when the union or unions with which Contractor has a collective bargaining agreement has not referred to Contractor a minority person or woman sent by Contractor, or when Contractor has other information that the union referral process has impeded Contractor's efforts to meet its obligations.

e. Develop on-the-job training opportunities and/or participate in training programs for the area which expressly include minorities and women, including upgrading programs and apprenticeship and trainee programs relevant to Contractor's employment needs, especially those programs funded or approved by the Department of Labor. Contractor shall provide notice of these programs to the sources compiled under 7b above.

f. Disseminate Contractor's EEO policy by providing notice of the policy to unions and training programs and requesting their cooperation in assisting Contractor in meeting its EEO obligations; by including it in any policy manual and collective bargaining agreement; by publicizing it in the company newspaper, annual report, etc.; by specific review of the policy with all management personnel and with all minority and female employees at least once a year; and by posting the company EEO policy on bulletin boards accessible to all employees at each location where construction work is performed.

g. Review, at least annually, the company's EEO policy and affirmative action obligations under these specifications with all employees having any responsibility for hiring, assignment, layoff, termination, or other employment decisions including specific review of these items with onsite supervisory personnel such superintendents, general foremen, etc., prior to the initiation of construction work at any job site. A written record shall be made and maintained identifying the time and place of these meetings, persons attending, subject matter discussed, and disposition of the subject matter.

h. Disseminate Contractor's EEO policy externally by including it in any advertising in the news media, specifically including minority and female news media, and providing written notification to and discussing Contractor's EEO policy with other contractors and subcontractors with whom Contractor does or anticipates doing business.

i. Direct its recruitment efforts, both oral and written, to minority, female, and community organizations, to schools with minority and female students and to minority and female recruitment and training organizations serving Contractor's recruitment area and employment needs. Not later than one month prior to the date for the acceptance of applications for apprenticeship or other training by any recruitment source, Contractor shall send written notification to organizations such as the above, describing the openings, screening procedures, and tests to be used in the selection process.

j. Encourage present minority and female employees to recruit other minority persons and women and, where reasonable, provide after school, summer, and vacation employment to minority and female youth both on the site and in other areas of a contractor's work force.

k. Validate all tests and other selection requirements where there is an obligation to do so under 41 CFR part 60-3.

l. Conduct, at least annually, an inventory and evaluation at least of all minority and female personnel, for promotional opportunities and encourage these employees to seek or to prepare for, through appropriate training, etc., such opportunities.

m. Ensure that seniority practices, job classifications, work assignments, and other personnel practices do not have a discriminatory effect by continually monitoring all personnel and employment related activities to ensure that the EEO policy and Contractor's obligations under these specifications are being carried out.

n. Ensure that all facilities and company activities are nonsegregated except that separate or single-user toilet and necessary changing facilities shall be provided to assure privacy between the sexes.

o. Document and maintain a record of all solicitations of offers for subcontracts from minority and female construction contractors and suppliers, including circulation of solicitations to minority and female contractor associations and other business associations.

p. Conduct a review, at least annually, of all supervisor's adherence to and performance under Contractor's EEO policies and affirmative action obligations.

8. Contractors are encouraged to participate in voluntary associations, which assist in fulfilling one or more of their affirmative action obligations (7a through 7p). The efforts of a contractor association, joint contractor-union, contractor-community, or other similar group of which Contractor is a member and participant may be asserted as fulfilling any one or more of its obligations under 7a through 7p of these specifications provided that Contractor actively participates in the group, makes every effort to assure that the group has a positive impact on the employment of minorities and women in the industry, ensures that the concrete benefits of the program are reflected in Contractor's minority and female workforce participation, makes a good faith effort to meet its individual goals and timetables, and can provide access to documentation which demonstrates the effectiveness of actions taken on behalf of Contractor. The obligation to comply, however, is Contractor's and failure of such a group to fulfill an obligation shall not be a defense for Contractor's noncompliance.

9. A single goal for minorities and a separate single goal for women have been established. Contractor, however, is required to provide equal employment opportunity and to take affirmative action for all minority groups, both male and female, and all women, both minority and non-minority. Consequently, Contractor may be in violation of the Executive Order if a particular group is employed in a substantially

disparate manner (for example, even though Contractor has achieved its goals for women generally, Contractor may be in violation of the Executive Order if a specific minority group of women is underutilized).

10. Contractor shall not use the goals and timetables or affirmative action standards to discriminate against any person because of race, color, religion, sex, sexual orientation, gender identity, or national origin.

11. Contractor shall not enter into any subcontract with any person or firm debarred from Government contracts pursuant to Executive Order 11246.

12. Contractor shall carry out such sanctions and penalties for violation of these specifications and of the Equal Opportunity Clause, including suspension, termination, and cancellation of existing subcontracts as may be imposed or ordered pursuant to Executive Order 11246, as amended, and its implementing regulations, by the Office of Federal Contract Compliance Programs. Any contractor who fails to carry out such sanctions and penalties shall be in violation of these specifications and Executive Order 11246, as amended.

13. Contractor, in fulfilling its obligations under these specifications, shall implement specific affirmative action steps, at least as extensive as those standards prescribed in paragraph 7 of these specifications, so as to achieve maximum results from its efforts to ensure equal employment opportunity. If Contractor fails to comply with the requirements of the Executive Order, the implementing regulations, or these specifications, the Director shall proceed in accordance with 41 CFR part 60-4.8.

14. Contractor shall designate a responsible official to monitor all employment related activity to ensure that the company EEO policy is being carried out, to submit reports relating to the provisions hereof as may be required by the Government, and to keep records. Records shall at least include for each employee, the name, address, telephone numbers, construction trade, union affiliation if any, employee identification number when assigned, social security number, race, sex, status (e.g., mechanic, apprentice, trainee, helper, or laborer), dates of changes in status, hours worked per week in the indicated trade, rate of pay, and locations at which the work was performed. Records shall be maintained in an easily understandable and retrievable form; however, to the degree that existing records satisfy this requirement, contractors shall not be required to maintain separate records.

15. Nothing herein provided shall be construed as a limitation upon the application of other laws which establish different standards of compliance or upon the application of requirements for the hiring of local or other area residents (e.g. those under the Public Works Employment Act of 1977 and the Community Development Block Grant Program).

FEDERAL FAIR LABOR STANDARDS ACT (FEDERAL MINIMUM WAGE)

All contracts and subcontracts that result from this solicitation incorporate by reference the provisions of 29 CFR part 201, et seq, the Federal Fair Labor Standards Act (FLSA), with the same force and effect as if given in full text. The FLSA sets minimum wage, overtime pay, recordkeeping, and child labor standards for full and part-time workers.

Contractor has full responsibility to monitor compliance to the referenced statute or regulation. Contractor must address any claims or disputes that arise from this requirement directly with the U.S. Department of Labor – Wage and Hour Division.

CERTIFICATION REGARDING LOBBYING

The Bidder or Offeror certifies by signing and submitting this bid or proposal, to the best of his or her knowledge and belief, that:

(1) No Federal appropriated funds have been paid or will be paid, by or on behalf of the Bidder or Offeror, to any person for influencing or attempting to influence an officer or employee of an agency, a Member of Congress, an officer or employee of Congress, or an employee of a Member of Congress in connection with the awarding of any Federal contract, the making of any Federal grant, the making of any Federal loan, the entering into of any cooperative agreement, and the extension, continuation, renewal, amendment, or modification of any Federal contract, grant, loan, or cooperative agreement.

(2) If any funds other than Federal appropriated funds have been paid or will be paid to any person for influencing or attempting to influence an officer or employee of any agency, a Member of Congress, an officer or employee of Congress, or an employee of a Member of Congress in connection with this Federal contract, grant, loan, or cooperative agreement, the undersigned shall complete and submit Standard Form-LLL, "Disclosure Form to Report Lobbying," in accordance with its instructions.

(3) The undersigned shall require that the language of this certification be included in the award documents for all sub-awards at all tiers (including subcontracts, subgrants, and contracts under grants, loans, and cooperative agreements) and that all sub-recipients shall certify and disclose accordingly.

This certification is a material representation of fact upon which reliance was placed when this transaction was made or entered into. Submission of this certification is a prerequisite for making or entering into this transaction imposed by section 1352, title 31, U.S. Code. Any person who fails to file the required certification shall be subject to a civil penalty of not less than $10,000 and not more than $100,000 for each such failure.

PROHIBITION OF SEGREGATED FACILITIES

(a) Contractor agrees that it does not and will not maintain or provide for its employees any segregated facilities at any of its establishments, and that it does not and will not permit its employees to perform their services at any location under its control where segregated facilities are maintained. Contractor agrees that a breach of this clause is a violation of the Equal Employment Opportunity clause in this contract.

(b) "Segregated facilities," as used in this clause, means any waiting rooms, work areas, rest rooms and wash rooms, restaurants and other eating areas, time clocks, locker rooms and other storage or dressing areas, parking lots, drinking fountains, recreation or entertainment areas, transportation, and housing

facilities provided for employees that are segregated by explicit directive or are in fact segregated on the basis of race, color, religion, sex, sexual orientation, gender identity, or national origin because of written or oral policies or employee custom. The term does not include separate or single-user rest rooms or necessary dressing or sleeping areas provided to assure privacy between the sexes.

(c) Contractor shall include this clause in every subcontract and purchase order that is subject to the Equal Employment Opportunity clause of this contract.

OCCUPATIONAL SAFETY AND HEALTH ACT OF 1970

All contracts and subcontracts that result from this solicitation incorporate by reference the requirements of 29 CFR Part 1910 with the same force and effect as if given in full text. The employer must provide a work environment that is free from recognized hazards that may cause death or serious physical harm to the employee. The employer retains full responsibility to monitor its compliance and their subcontractor's compliance with the applicable requirements of the Occupational Safety and Health Act of 1970 (29 CFR Part 1910). The employer must address any claims or disputes that pertain to a referenced requirement directly with the U.S. Department of Labor – Occupational Safety and Health Administration.

PROCUREMENT OF RECOVERED MATERIALS

Contractor and subcontractor agree to comply with Section 6002 of the Solid Waste Disposal Act, as amended by the Resource Conservation and Recovery Act, and the regulatory provisions of 40 CFR Part 247. In the performance of this contract and to the extent practicable, Contractor and subcontractors are to use products containing the highest percentage of recovered materials for items designated by the Environmental Protection Agency (EPA) under 40 CFR Part 247 whenever:

1) The contract requires procurement of $10,000 or more of a designated item during the fiscal year; or
2) Contractor has procured $10,000 or more of a designated item using Federal funding during the previous fiscal year.

The list of EPA-designated items is available at www.epa.gov/smm/comprehensive-procurement-guidelines-construction-products.

Section 6002(c) establishes exceptions to the preference for recovery of EPA-designated products if Contractor can demonstrate the item is:

a) Not reasonably available within a timeframe providing for compliance with the contract performance schedule;
b) Fails to meet reasonable contract performance requirements; or
c) Is only available at an unreasonable price.

CERTIFICATION OF OFFEROR/BIDDER REGARDING TAX DELINQUENCY AND FELONY CONVICTIONS

The applicant must complete the following two certification statements. The applicant must indicate its current status as it relates to tax delinquency and felony conviction by inserting a checkmark (✓) in the space following the applicable response. The applicant agrees that, if awarded a contract resulting from this solicitation, it will incorporate this provision for certification in all lower tier subcontracts.

Certifications

1) The applicant represents that it is ( ) is not ( ) a corporation that has any unpaid Federal tax liability that has been assessed, for which all judicial and administrative remedies have been exhausted or have lapsed, and that is not being paid in a timely manner pursuant to an agreement with the authority responsible for collecting the tax liability.
2) The applicant represents that it is ( ) is not ( ) a corporation that was convicted of a criminal violation under any Federal law within the preceding 24 months.

Note

If an applicant responds in the affirmative to either of the above representations, the applicant is ineligible to receive an award unless the Sponsor has received notification from the agency suspension and debarment official (SDO) that the SDO has considered suspension or debarment and determined that further action is not required to protect the Government's interests. The applicant therefore must provide information to the owner about its tax liability or conviction to the Owner, who will then notify the FAA Airports District Office, which will then notify the agency's SDO to facilitate completion of the required considerations before award decisions are made.

Term Definitions

> **Felony conviction:** Felony conviction means a conviction within the preceding twenty four (24) months of a felony criminal violation under any Federal law and includes conviction of an offense defined in a section of the U.S. Code that specifically classifies the offense as a felony and conviction of an offense that is classified as a felony under 18 USC § 3559.
>
> **Tax Delinquency**: A tax delinquency is any unpaid Federal tax liability that has been assessed, for which all judicial and administrative remedies have been exhausted, or have lapsed, and that is not being paid in a timely manner pursuant to an agreement with the authority responsible for collecting the tax liability.

TERMINATION FOR CONVENIENCE (CONSTRUCTION & EQUIPMENT CONTRACTS)

The Owner may terminate this contract in whole or in part at any time by providing written notice to Contractor. Such action may be without cause and without prejudice to any other right or remedy of Owner. Upon receipt of a written notice of termination, except as explicitly directed by the Owner, Contractor shall immediately proceed with the following obligations regardless of any delay in determining or adjusting amounts due under this clause:

1. Contractor must immediately discontinue work as specified in the written notice.
2. Terminate all subcontracts to the extent they relate to the work terminated under the notice.

3. Discontinue orders for materials and services except as directed by the written notice.
4. Deliver to the Owner all fabricated and partially fabricated parts, completed and partially completed work, supplies, equipment and materials acquired prior to termination of the work, and as directed in the written notice.
5. Complete performance of the work not terminated by the notice.
6. Take action as directed by the Owner to protect and preserve property and work related to this contract that Owner will take possession.

Owner agrees to pay Contractor for:

1. Completed and acceptable work executed in accordance with the contract documents prior to the effective date of termination;
2. Documented expenses sustained prior to the effective date of termination in performing work and furnishing labor, materials, or equipment as required by the contract documents in connection with uncompleted work;
3. Reasonable and substantiated claims, costs, and damages incurred in settlement of terminated contracts with Subcontractors and Suppliers; and
4. Reasonable and substantiated expenses to Contractor directly attributable to Owner's termination action.

Owner will not pay Contractor for loss of anticipated profits or revenue or other economic loss arising out of or resulting from the Owner's termination action.

The rights and remedies this clause provides are in addition to any other rights and remedies provided by law or under this contract.

TERMINATION FOR CAUSE (CONSTRUCTION)

Section 80-09 of FAA Advisory Circular 150/5370-10 establishes standard language for conditions, rights, and remedies associated with Owner termination of this contract for cause due to default of Contractor.

TRADE RESTRICTION CERTIFICATION

By submission of an offer, the Offeror certifies that with respect to this solicitation and any resultant contract, the Offeror –

1) is not owned or controlled by one or more citizens of a foreign country included in the list of countries that discriminate against U.S. firms as published by the Office of the United States Trade Representative (USTR);

2) has not knowingly entered into any contract or subcontract for this project with a person that is a citizen or national of a foreign country included on the list of countries that discriminate against U.S. firms as published by the USTR; and

3) has not entered into any subcontract for any product to be used on the Federal project that is produced in a foreign country included on the list of countries that discriminate against U.S. firms published by the USTR.

This certification concerns a matter within the jurisdiction of an agency of the United States of America and the making of a false, fictitious, or fraudulent certification may render the maker subject to prosecution under Title 18 USC § 1001.

The Offeror/Contractor must provide immediate written notice to the Owner if the Offeror/Contractor learns that its certification or that of a subcontractor was erroneous when submitted or has become erroneous by reason of changed circumstances. Contractor must require subcontractors provide immediate written notice to Contractor if at any time it learns that its certification was erroneous by reason of changed circumstances.

Unless the restrictions of this clause are waived by the Secretary of Transportation in accordance with 49 CFR § 30.17, no contract shall be awarded to an Offeror or subcontractor:

1) who is owned or controlled by one or more citizens or nationals of a foreign country included on the list of countries that discriminate against U.S. firms published by the USTR; or
2) whose subcontractors are owned or controlled by one or more citizens or nationals of a foreign country on such USTR list; or
3) who incorporates in the public works project any product of a foreign country on such USTR list.

Nothing contained in the foregoing shall be construed to require establishment of a system of records in order to render, in good faith, the certification required by this provision. The knowledge and information of a contractor is not required to exceed that which is normally possessed by a prudent person in the ordinary course of business dealings.

The Offeror agrees that, if awarded a contract resulting from this solicitation, it will incorporate this provision for certification without modification in all lower tier subcontracts. Contractor may rely on the certification of a prospective subcontractor that it is not a firm from a foreign country included on the list of countries that discriminate against U.S. firms as published by USTR, unless the Offeror has knowledge that the certification is erroneous.

This certification is a material representation of fact upon which reliance was placed when making an award. If it is later determined that Contractor or subcontractor knowingly rendered an erroneous certification, the Federal Aviation Administration (FAA) may direct through the Owner cancellation of the contract or subcontract for default at no cost to the Owner or the FAA.

VETERAN'S PREFERENCE

In the employment of labor (excluding executive, administrative, and supervisory positions), Contractor and all sub-tier contractors must give preference to covered veterans as defined within Title 49 United States Code Section 47112. Covered veterans include Vietnam-era veterans, Persian Gulf veterans, Afghanistan-Iraq war veterans, disabled veterans, and small business concerns (as defined by 15 USC § 632) owned and controlled by disabled veterans. This preference only applies when there are covered veterans readily available and qualified to perform the work to which the employment relates.

CERTIFICATION REGARDING DOMESTIC PREFERENCES FOR PROCUREMENTS

The Bidder or Offeror certifies by signing and submitting this bid or proposal that, to the greatest extent practicable, the Bidder or Offeror has provided a preference for the purchase, acquisition, or use of goods, products, or materials produced in the United States (including, but not limited to, iron, aluminum, steel, cement, and other manufactured products) in compliance with 2 CFR § 200.322.

SECTION 00 73 43 – WAGE RATE REQUIREMENTS

PART 1 - GENERAL

1.1 WAGE RATE ESTABLISHMENT

A. Refer to FAA Contract Provision on Davis-Bacon included herein for requirements.
B. Contractor shall forfeit as a penalty to Owner, $60.00 for each laborer, workman, or mechanic employed for each calendar day, or portion thereof, such laborer, workman, or mechanic is paid less than the said stipulated rates for any work done under this Contract by him, or by any subcontractor under him.
C. Nothing herein contained, however, shall be construed to prohibit the payment of more than the prevailing rate of wages to any laborer, workman, or mechanic employed on the Work.
D. Attention is called to the fact that there must be paid on this Project not less than the general prevailing rates which have been established by Owner and verified by Contractor as indicated in the Schedule at the end of this Document.

1.2 POSTING WAGE RATES

A. Minimum Wage Rates shall be posted on job site in a conspicuous place open for inspection by all workmen.

1.3 EMPLOYEE CLAIMS

A. Any employee who alleges that he has not been paid the minimum wage rate may file a written claim with Owner.

1.4 PAYMENT OF EMPLOYEES AND PAYROLL RECORDS

A. Refer to FAA Contract Provisions on Davis-Bacon included herein for requirements.

1.5 PAYROLL RECORDS

A. Refer to FAA Contract Provision on Davis-Bacon included herein for requirements.

1.6 CLASSIFICATION OF EMPLOYEES

A. Refer to FAA Contract Provision on “DAVIS-BACON REQUIREMENTS” Section 1(ii)(A).

B. For classifications needed for Work but not included in the General Decision below, Contractor shall prepare and submit to Owner, Standard Form 1444, “Request for Authorization of Additional Classification Rate.”

1.7 WAGE RATE SCHEDULE

A. See attached General Decision TX20240002 dated 01/05/2024, issued by the Federal Government and any revisions/updates issued for Midland County.

PART 2 - PRODUCTS (Not Used)

PART 3 - EXECUTION (Not Used)

END OF SECTION

"General Decision Number: TX20240002 01/05/2024

Superseded General Decision Number: TX20230002

State: Texas

Construction Types: Heavy and Highway

Counties: Armstrong, Carson, Crosby, Ector, Irion, Lubbock, Midland, Potter, Randall, Taylor and Tom Green Counties in Texas.

HEAVY & HIGHWAY CONSTRUCTION PROJECTS

Note: Contracts subject to the Davis-Bacon Act are generally required to pay at least the applicable minimum wage rate required under Executive Order 14026 or Executive Order 13658. Please note that these Executive Orders apply to covered contracts entered into by the federal government that are subject to the Davis-Bacon Act itself, but do not apply to contracts subject only to the Davis-Bacon Related Acts, including those set forth at 29 CFR 5.1(a)(1).

If the contract is entered into on or after January 30, 2022, or the contract is renewed or extended (e.g., an option is exercised) on or after January 30, 2022:	. Executive Order 14026 generally applies to the contract. . The contractor must pay all covered workers at least $17.20 per hour (or the applicable wage rate listed on this wage determination, if it is higher) for all hours spent performing on the contract in 2024.
If the contract was awarded on or between January 1, 2015 and January 29, 2022, and the contract is not renewed or extended on or after January 30, 2022:	. Executive Order 13658 generally applies to the contract. . The contractor must pay all covered workers at least $12.90 per hour (or the applicable wage rate listed on this wage determination, if it is higher) for all hours spent performing on that contract in 2024.

The applicable Executive Order minimum wage rate will be adjusted annually. If this contract is covered by one of the Executive Orders and a classification considered necessary for performance of work on the contract does not appear on this wage determination, the contractor must still submit a conformance request.

Additional information on contractor requirements and worker protections under the Executive Orders is available at http://www.dol.gov/whd/govcontracts.

SUTX2011-002 08/02/2011

	Rates	Fringes
CEMENT MASON/CONCRETE FINISHER (Paving & Structures)	$ 13.55 **	
ELECTRICIAN	$ 20.96	
FORM BUILDER/FORM SETTER		
Paving & Curb	$ 12.36 **	
Structures	$ 13.52 **	
LABORER		
Asphalt Raker	$ 12.28 **	
Flagger	$ 9.30 **	
Laborer, Common	$ 10.30 **	
Laborer, Utility	$ 11.80 **	
Work Zone Barricade Servicer	$ 10.30 **	
POWER EQUIPMENT OPERATOR:		
Asphalt Distributer	$ 14.87 **	
Asphalt Paving Machine	$ 13.40 **	
Broom and Sweeper	$ 11.21 **	
Crane, Lattice Boom 80 Tons or Less	$ 16.82 **	
Crawler Tractor Operator	$ 13.96 **	
Excavator, 50,000 lbs or less	$ 13.46 **	
Front End Loader Operator, Over 3 CY	$ 12.77 **	
Front End Loader, 3CY or less	$ 12.28 **	
Loader/Backhoe	$ 14.18 **	
Mechanic	$ 20.14	
Milling Machine	$ 15.54 **	
Motor Grader, Rough	$ 16.15 **	
Motor Grader, Fine	$ 17.49	
Pavement Marking Machine	$ 16.42 **	
Reclaimer/Pulverizer	$ 12.85 **	
Roller, Asphalt	$ 10.95 **	
Roller, Other	$ 10.36 **	
Scraper	$ 10.61 **	
Spreader Box	$ 12.60 **	
Servicer	$ 13.98 **	
Steel Worker (Reinforcing)	$ 13.50 **	
TRUCK DRIVER		
Lowboy-Float	$ 14.46 **	
Single Axle	$ 12.74 **	
Single or Tandem Axle Dump	$ 11.33 **	
Tandem Axle Tractor with Semi	$ 12.49 **	

WELDERS - Receive rate prescribed for craft performing operation to which welding is incidental.

==========

** Workers in this classification may be entitled to a higher

minimum wage under Executive Order 14026 ($17.20) or 13658 ($12.90). Please see the Note at the top of the wage determination for more information. Please also note that the minimum wage requirements of Executive Order 14026 are not currently being enforced as to any contract or subcontract to which the states of Texas, Louisiana, or Mississippi, including their agencies, are a party.

Note: Executive Order (EO) 13706, Establishing Paid Sick Leave for Federal Contractors applies to all contracts subject to the Davis-Bacon Act for which the contract is awarded (and any solicitation was issued) on or after January 1, 2017. If this contract is covered by the EO, the contractor must provide employees with 1 hour of paid sick leave for every 30 hours they work, up to 56 hours of paid sick leave each year. Employees must be permitted to use paid sick leave for their own illness, injury or other health-related needs, including preventive care; to assist a family member (or person who is like family to the employee) who is ill, injured, or has other health-related needs, including preventive care; or for reasons resulting from, or to assist a family member (or person who is like family to the employee) who is a victim of, domestic violence, sexual assault, or stalking. Additional information on contractor requirements and worker protections under the EO is available at https://www.dol.gov/agencies/whd/government-contracts.

Unlisted classifications needed for work not included within the scope of the classifications listed may be added after award only as provided in the labor standards contract clauses (29CFR 5.5 (a) (1) (iii)).

The body of each wage determination lists the classification and wage rates that have been found to be prevailing for the cited type(s) of construction in the area covered by the wage determination. The classifications are listed in alphabetical order of ""identifiers"" that indicate whether the particular rate is a union rate (current union negotiated rate for local), a survey rate (weighted average rate) or a union average rate (weighted union average rate).

Union Rate Identifiers

A four letter classification abbreviation identifier enclosed in dotted lines beginning with characters other than ""SU"" or ""UAVG"" denotes that the union classification and rate were prevailing for that classification in the survey. Example: PLUM0198-005 07/01/2014. PLUM is an abbreviation identifier of the union which prevailed in the survey for this classification, which in this example would be Plumbers. 0198 indicates the local union number or district council number where applicable, i.e., Plumbers Local 0198. The next number, 005 in the example, is an internal number used in processing the wage determination. 07/01/2014 is the effective date of the most current negotiated rate, which in this example is July 1, 2014.

Union prevailing wage rates are updated to reflect all rate changes in the collective bargaining agreement (CBA) governing this classification and rate.

Survey Rate Identifiers

Classifications listed under the ""SU"" identifier indicate that no one rate prevailed for this classification in the survey and the published rate is derived by computing a weighted average rate based on all the rates reported in the survey for that classification. As this weighted average rate includes all rates reported in the survey, it may include both union and non-union rates. Example: SULA2012-007 5/13/2014. SU indicates the rates are survey rates based on a weighted average calculation of rates and are not majority rates. LA indicates the State of Louisiana. 2012 is the year of survey on which these classifications and rates are based. The next number, 007 in the example, is an internal number used in producing the wage determination. 5/13/2014 indicates the survey completion date for the classifications and rates under that identifier.

Survey wage rates are not updated and remain in effect until a new survey is conducted.

Union Average Rate Identifiers

Classification(s) listed under the UAVG identifier indicate that no single majority rate prevailed for those classifications; however, 100% of the data reported for the classifications was union data. EXAMPLE: UAVG-OH-0010 08/29/2014. UAVG indicates that the rate is a weighted union average rate. OH indicates the state. The next number, 0010 in the example, is an internal number used in producing the wage determination. 08/29/2014 indicates the survey completion date for the classifications and rates under that identifier.

A UAVG rate will be updated once a year, usually in January of each year, to reflect a weighted average of the current negotiated/CBA rate of the union locals from which the rate is based.

WAGE DETERMINATION APPEALS PROCESS

1.) Has there been an initial decision in the matter? This can be:

* an existing published wage determination
* a survey underlying a wage determination
* a Wage and Hour Division letter setting forth a position on a wage determination matter
* a conformance (additional classification and rate) ruling

On survey related matters, initial contact, including requests for summaries of surveys, should be with the Wage and Hour National Office because National Office has responsibility for the Davis-Bacon survey program. If the response from this initial contact is not satisfactory, then the process described in 2.) and 3.) should be followed.

With regard to any other matter not yet ripe for the formal process described here, initial contact should be with the Branch of Construction Wage Determinations. Write to:

Branch of Construction Wage Determinations
Wage and Hour Division

U.S. Department of Labor
200 Constitution Avenue, N.W.
Washington, DC 20210

2.) If the answer to the question in 1.) is yes, then an interested party (those affected by the action) can request review and reconsideration from the Wage and Hour Administrator (See 29 CFR Part 1.8 and 29 CFR Part 7). Write to:

Wage and Hour Administrator
U.S. Department of Labor
200 Constitution Avenue, N.W.
Washington, DC 20210

The request should be accompanied by a full statement of the interested party's position and by any information (wage payment data, project description, area practice material, etc.) that the requestor considers relevant to the issue.

3.) If the decision of the Administrator is not favorable, an interested party may appeal directly to the Administrative Review Board (formerly the Wage Appeals Board). Write to:

Administrative Review Board
U.S. Department of Labor
200 Constitution Avenue, N.W.
Washington, DC 20210

4.) All decisions by the Administrative Review Board are final.

===

END OF GENERAL DECISION"

Part 1 – General Contract Provisions

Section 10 Definition of Terms

When the following terms are used in these Specifications, in the contract, or in any documents or other instruments pertaining to construction where these Specifications govern, the intent and meaning shall be defined as follows:

Paragraph Number	Term	Definition
10-01	**AASHTO**	The American Association of State Highway and Transportation Officials.
10-02	**Access Road**	The right-of-way, the roadway and all improvements constructed thereon connecting the airport to a public roadway.
10-03	**Advertisement**	A public announcement, as required by local law, inviting bids for work to be performed and materials to be furnished.
10-04	**Airport**	Airport means an area of land or water which is used or intended to be used for the landing and takeoff of aircraft; an appurtenant area used or intended to be used for airport buildings or other airport facilities or rights of way; airport buildings and facilities located in any of these areas, and a heliport.
10-05	**Airport Improvement Program (AIP)**	A grant-in-aid program, administered by the Federal Aviation Administration (FAA).
10-06	**Air Operations Area (AOA)**	The term air operations area (AOA) shall mean any area of the airport used or intended to be used for the landing, takeoff, or surface maneuvering of aircraft. An air operation area shall include such paved or unpaved areas that are used or intended to be used for the unobstructed movement of aircraft in addition to its associated runway, taxiway, or apron.
10-07	**Apron**	Area where aircraft are parked, unloaded or loaded, fueled and/or serviced.
10-08	**ASTM International (ASTM)**	Formerly known as the American Society for Testing and Materials (ASTM).
10-09	**Award**	Owner's notice to the successful Bidder of the acceptance of the submitted bid.
10-10	**Bidder**	Any individual, partnership, firm, or corporation, acting directly or through a duly authorized representative, who submits a proposal for the work contemplated.

Paragraph Number	Term	Definition
10-11	**Building Area**	An area on the airport to be used, considered, or intended to be used for airport buildings or other airport facilities or rights-of-way together with all airport buildings and facilities located thereon.
10-12	**Calendar Day**	Every day shown on the calendar.
10-13	**Certificate of Analysis (COA)**	The COA is the manufacturer's Certificate of Compliance (COC) including all applicable test results required by the specifications.
10-14	**Certificate of Compliance (COC)**	The manufacturer's certification stating that materials or assemblies furnished fully comply with the requirements of the contract. The certificate shall be signed by the manufacturer's authorized representative.
10-15	**Change Order**	A written order to Contractor covering changes in the plans, specifications, or proposal quantities and establishing the basis of payment and contract time adjustment, if any, for work within the scope of the contract and necessary to complete the project.
10-16	**Contract**	A written agreement between Owner and Contractor that establishes the obligations of the parties including but not limited to performance of work, furnishing of labor, equipment and materials and the basis of payment. The awarded contract includes but may not be limited to: Advertisement, Contract form, Proposal, Performance bond, payment bond, General provisions, certifications and representations, Technical Specifications, Plans, Supplemental Provisions, standards incorporated by reference and issued addenda.
10-17	**Contract Item (Pay Item)**	A specific unit of work for which a price is provided in the contract.
10-18	**Contract Time**	The number of calendar days or working days, stated in the proposal, allowed for completion of the contract, including authorized time extensions. If a calendar date of completion is stated in the proposal, in lieu of a number of calendar or working days, the contract shall be completed by that date.
10-19	**Contractor**	The individual, partnership, firm, or corporation primarily liable for the acceptable performance of the work contracted and for the payment of all legal debts pertaining to the work who acts directly or through lawful agents or employees to complete the contract work.
10-20	**Contractors Quality Control (QC) Facilities**	Contractor's QC facilities in accordance with Contractor Quality Control Program (CQCP).

Paragraph Number	Term	Definition
10-21	**Contractor Quality Control Program (CQCP)**	Details the methods and procedures that will be taken to assure that all materials and completed construction required by the contract conform to contract plans, technical specifications and other requirements, whether manufactured by Contractor, or procured from subcontractors or vendors.
10-22	**Control Strip**	A demonstration by Contractor that the materials, equipment, and construction processes results in a product meeting the requirements of the specification.
10-23	**Construction Safety and Phasing Plan (CSPP)**	The overall plan for safety and phasing of a construction project developed by the airport operator, or developed by the airport operator's consultant and approved by the airport operator. It is included in the invitation for bids and becomes part of the project specifications.
10-24	**Drainage System**	The system of pipes, ditches, and structures by which surface or subsurface waters are collected and conducted from the airport area.
10-25	**Engineer**	The individual, partnership, firm, or corporation duly authorized by Owner to be responsible for engineering, inspection, and/or observation of the contract work and acting directly or through an authorized representative.
10-26	**Equipment**	All machinery, together with the necessary supplies for upkeep and maintenance; and all tools and apparatus necessary for the proper construction and acceptable completion of the work.
10-27	**Extra Work**	An item of work not provided for in the awarded contract as previously modified by change order or supplemental agreement, but which is found by Owner's Engineer or Resident Project Representative (RPR) to be necessary to complete the work within the intended scope of the contract as previously modified.
10-28	**FAA**	The Federal Aviation Administration. When used to designate a person, FAA shall mean the Administrator or their duly authorized representative.
10-29	**Federal Specifications**	The federal specifications and standards, commercial item descriptions, and supplements, amendments, and indices prepared and issued by the General Services Administration.

Paragraph Number	Term	Definition
10-30	**Force Account**	**a.** Contract Force Account - A method of payment that addresses extra work performed by Contractor on a time and material basis. **b.** Owner Force Account - Work performed for the project by Owner's employees.
10-31	**Intention of Terms**	Whenever, in these Specifications or on the plans, the words "directed," "required," "permitted," "ordered," "designated," "prescribed," or words of like import are used, it shall be understood that the direction, requirement, permission, order, designation, or prescription of Engineer and/or Resident Project Representative (RPR) is intended; and similarly, the words "approved," "acceptable," "satisfactory," or words of like import, shall mean approved by, or acceptable to, or satisfactory to Engineer and/or RPR, subject in each case to the final determination of Owner. Any reference to a specific requirement of a numbered paragraph of the contract specifications or a cited standard shall be interpreted to include all general requirements of the entire section, specification item, or cited standard that may be pertinent to such specific reference.
10-32	**Lighting**	A system of fixtures providing or controlling the light sources used on or near the airport or within the airport buildings. The field lighting includes all luminous signals, markers, floodlights, and illuminating devices used on or near the airport or to aid in the operation of aircraft landing at, taking off from, or taxiing on the airport surface.
10-33	**Major and Minor Contract Items**	A major contract item shall be any item that is listed in the proposal, the total cost of which is equal to or greater than 20% of the total amount of the award contract. All other items shall be considered minor contract items.
10-34	**Materials**	Any substance specified for use in the construction of the contract work.
10-35	**Modification of Standards (MOS)**	Any deviation from standard specifications applicable to material and construction methods in accordance with FAA Order 5300.1.
10-36	**Notice to Proceed (NTP)**	A written notice to Contractor to begin the actual contract work on a previously agreed to date. If applicable, the Notice to Proceed shall state the date on which the contract time begins.
10-37	**Owner**	The term "Owner" shall mean the party of the first part or the contracting agency signatory to the contract. Where the term "Owner" is capitalized in this document, it shall mean airport Sponsor only. Owner for this project is **Midland International Air & Space Port**.

Paragraph Number	Term	Definition
10-38	Passenger Facility Charge (PFC)	Per 14 Code of Federal Regulations (CFR) Part 158 and 49 United States Code (USC) § 40117, a PFC is a charge imposed by a public agency on passengers enplaned at a commercial service airport it controls.
10-39	**Pavement Structure**	The combined surface course, base course(s), and subbase course(s), if any, considered as a single unit.
10-40	**Payment bond**	The approved form of security furnished by Contractor and their own surety as a guaranty that Contractor will pay in full all bills and accounts for materials and labor used in the construction of the work.
10-41	**Performance bond**	The approved form of security furnished by Contractor and their own surety as a guaranty that Contractor will complete the work in accordance with the terms of the contract.
10-42	**Plans**	The official drawings or exact reproductions which show the location, character, dimensions and details of the airport and the work to be done and which are to be considered as a part of the contract, supplementary to the specifications. Plans may also be referred to as 'Contract Drawings.'
10-43	**Project**	The agreed scope of work for accomplishing specific airport development with respect to a particular airport.
10-44	**Proposal**	The written offer of the Bidder (when submitted on the approved proposal form) to perform the contemplated work and furnish the necessary materials in accordance with the provisions of the plans and specifications.
10-45	**Proposal guaranty**	The security furnished with a proposal to guarantee that the Bidder will enter into a contract if their own proposal is accepted by Owner.
10-46	**Quality Assurance (QA)**	Owner's responsibility to assure that construction work completed complies with specifications for payment.
10-47	**Quality Control (QC)**	Contractor's responsibility to control material(s) and construction processes to complete construction in accordance with project specifications.
10-48	**Quality Assurance (QA) Inspector**	An authorized representative of Engineer and/or Resident Project Representative (RPR) assigned to make all necessary inspections, observations, tests, and/or observation of tests of the work performed or being performed, or of the materials furnished or being furnished by Contractor.

Paragraph Number	Term	Definition
10-49	**Quality Assurance (QA) Laboratory**	The official quality assurance testing laboratories of Owner or such other laboratories as may be designated by Engineer or RPR. May also be referred to as Engineer's, Owner's, or QA Laboratory.
10-50	**Resident Project Representative (RPR)**	The individual, partnership, firm, or corporation duly authorized by Owner to be responsible for all necessary inspections, observations, tests, and/or observations of tests of the contract work performed or being performed, or of the materials furnished or being furnished by Contractor, and acting directly or through an authorized representative.
10-51	**Runway**	The area on the airport prepared for the landing and takeoff of aircraft.
10-52	**Runway Safety Area (RSA)**	A defined surface surrounding the runway prepared or suitable for reducing the risk of damage to aircraft. See the construction safety and phasing plan (CSPP) for limits of the RSA.
10-53	**Safety Plan Compliance Document (SPCD)**	Details how Contractor will comply with the CSPP.
10-54	**Specifications**	A part of the contract containing the written directions and requirements for completing the contract work. Standards for specifying materials or testing which are cited in the contract specifications by reference shall have the same force and effect as if included in the contract physically.
10-55	**Sponsor**	A Sponsor is defined in 49 USC § 47102(24) as a public agency that submits to the FAA for an AIP grant; or a private Owner of a public-use airport that submits to the FAA an application for an AIP grant for the airport.
10-56	**Structures**	Airport facilities such as bridges; culverts; catch basins, inlets, retaining walls, cribbing; storm and sanitary sewer lines; water lines; underdrains; electrical ducts, manholes, handholes, lighting fixtures and bases; transformers; navigational aids; buildings; vaults; and other manmade features of the airport that may be encountered in the work and not otherwise classified herein.
10-57	**Subgrade**	The soil that forms the pavement foundation.
10-58	**Superintendent**	Contractor's executive representative who is present on the work during progress, authorized to receive and fulfill instructions from the RPR, and who shall supervise and direct the construction.

Paragraph Number	Term	Definition
10-59	**Supplemental Agreement**	A written agreement between Contractor and Owner that establishes the basis of payment and contract time adjustment, if any, for the work affected by the supplemental agreement. A supplemental agreement is required if: (1) in-scope work would increase or decrease the total amount of the awarded contract by more than 25%: (2) in-scope work would increase or decrease the total of any major contract item by more than 25%; (3) work that is not within the scope of the originally awarded contract; or (4) adding or deleting of a major contract item.
10-60	**Surety**	The corporation, partnership, or individual, other than Contractor, executing payment or performance bonds that are furnished to Owner by Contractor.
10-61	**Taxilane**	A taxiway designed for low-speed movement of aircraft between aircraft parking areas and terminal areas.
10-62	**Taxiway**	The portion of the air operations area of an airport that has been designated by competent airport authority for movement of aircraft to and from the airport's runways, aircraft parking areas, and terminal areas.
10-63	**Taxiway/Taxilane Safety Area (TSA)**	A defined surface alongside the taxiway prepared or suitable for reducing the risk of damage to an aircraft. See the construction safety and phasing plan (CSPP) for limits of the TSA.
10-64	**Work**	The furnishing of all labor, materials, tools, equipment, and incidentals necessary or convenient to Contractor's performance of all duties and obligations imposed by the contract, plans, and specifications.
10-65	**Working day**	A working day shall be any day other than a legal holiday, Saturday, or Sunday on which the normal working forces of Contractor may proceed with regular work for at least six (6) hours toward completion of the contract. When work is suspended for causes beyond Contractor's control, it will not be counted as a working day. Saturdays, Sundays and holidays on which Contractor's forces engage in regular work will be considered as working days.
10-66	**Owner Defined terms**	None

END OF SECTION 10

Section 20 Proposal Requirements and Conditions

20-01 Advertisement (Notice to Bidders). Project Advertisement and Instruction to Bidders may be found in Sections A-1 and IB-1, respectively, of the front end portion of the Project Manual.

20-02 Qualification of Bidders. Each Bidder shall submit evidence of competency and evidence of financial responsibility to perform the work to Owner at the time of bid opening.

Evidence of competency, unless otherwise specified, shall consist of statements covering the Bidder's past experience on similar work, and a list of equipment and a list of key personnel that would be available for the work.

Each Bidder shall furnish Owner satisfactory evidence of their financial responsibility. Evidence of financial responsibility, unless otherwise specified, shall consist of a confidential statement or report of the Bidder's financial resources and liabilities as of the last calendar year or the Bidder's last fiscal year. Such statements or reports shall be certified by a public accountant. At the time of submitting such financial statements or reports, the Bidder shall further certify whether their financial responsibility is approximately the same as stated or reported by the public accountant. If the Bidder's financial responsibility has changed, the Bidder shall qualify the public accountant's statement or report to reflect the Bidder's true financial condition at the time such qualified statement or report is submitted to Owner.

Unless otherwise specified, a Bidder may submit evidence that they are prequalified with the State Highway Division and are on the current "Bidder's list" of the state in which the proposed work is located. Evidence of State Highway Division prequalification may be submitted as evidence of financial responsibility in lieu of the certified statements or reports specified above.

20-03 Contents of proposal forms. Owner's proposal forms state the location and description of the proposed construction; the place, date, and time of opening of the proposals; and the estimated quantities of the various items of work to be performed and materials to be furnished for which unit bid prices are asked. The proposal form states the time in which the work must be completed, and the amount of the proposal guaranty that must accompany the proposal. Owner will accept only those Proposals properly executed on physical forms or electronic forms provided by Owner. Bidder actions that may cause Owner to deem a proposal irregular are given in Paragraph 20-09 *Irregular proposals*.

Mobilization is limited to 10 percent of the total project cost.

A prebid conference is required on this project to discuss as a minimum, the following items: material requirements; submittals; Quality Control/Quality Assurance requirements; the construction safety and phasing plan including airport access and staging areas; and unique airfield paving construction requirements. See Section IB-2 - Instruction to Bidders for location and time of meeting.

20-04 Issuance of proposal forms. Owner reserves the right to refuse to issue a proposal form to a prospective Bidder if the Bidder is in default for any of the following reasons:

a. Failure to comply with any prequalification regulations of Owner, if such regulations are cited, or otherwise included, in the proposal as a requirement for bidding.

b. Failure to pay, or satisfactorily settle, all bills due for labor and materials on former contracts in force with Owner at the time Owner issues the proposal to a prospective Bidder.

c. Documented record of Contractor default under previous contracts with Owner.

d. Documented record of unsatisfactory work on previous contracts with Owner.

20-05 Interpretation of estimated proposal quantities. An estimate of quantities of work to be done and materials to be furnished under these Specifications is given in the proposal. It is the result of careful calculations and is believed to be correct. It is given only as a basis for comparison of proposals and the award of the contract. Owner does not expressly, or by implication, agree that the actual quantities involved will correspond exactly therewith; nor shall the Bidder plead misunderstanding or deception because of such estimates of quantities, or of the character, location, or other conditions pertaining to the work. Payment to Contractor will be made only for the actual quantities of work performed or materials furnished in accordance with the plans and specifications. It is understood that the quantities may be increased or decreased as provided in the Section 40, Paragraph 40-02, Alteration of Work and Quantities, without in any way invalidating the unit bid prices.

20-06 Examination of Plans, Specifications, and Site. The Bidder is expected to carefully examine the site of the proposed work, the Proposal, Plans, Specifications, and Contract Forms. Bidders shall satisfy themselves to the character, quality, and quantities of work to be performed, materials to be furnished, and to the requirements of the proposed Contract. The submission of a Proposal shall be prima facie evidence that the Bidder has made such examination and is satisfied to the conditions to be encountered in performing the work and the requirements of the proposed Contract, Plans, and Specifications.

20-07 Preparation of proposal. The Bidder shall submit their proposal on the forms furnished by Owner. All blank spaces in the proposal forms, unless explicitly stated otherwise, must be correctly filled in where indicated for each and every item for which a quantity is given. The Bidder shall state the price (written in ink or typed) both in words and numerals which they propose for each pay item furnished in the proposal. In case of conflict between words and numerals, the words, unless obviously incorrect, shall govern.

The Bidder shall correctly sign the proposal in ink. If the proposal is made by an individual, their name and post office address must be shown. If made by a partnership, the name and post office address of each member of the partnership must be shown. If made by a corporation, the person signing the proposal shall give the name of the state where the corporation was chartered and the name, titles, and business address of the president, secretary, and the treasurer. Anyone signing a proposal as an agent shall file evidence of their authority to do so and that the signature is binding upon the firm or corporation.

20-08 Responsive and responsible Bidder. A responsive bid conforms to all significant terms and conditions contained in Owner's invitation for bid. It is Owner's responsibility to decide if the exceptions taken by a Bidder to the solicitation are material or not and the extent of deviation it is willing to accept.

A responsible Bidder has the ability to perform successfully under the terms and conditions of a proposed procurement, as defined in 2 CFR § 200.318(h). This includes such matters as Contractor integrity, compliance with public policy, record of past performance, and financial and technical resources.

20-09 Irregular proposals. Proposals shall be considered irregular for the following reasons:

a. If the proposal is on a form other than that furnished by Owner, or if Owner's form is altered, or if any part of the proposal form is detached.

b. If there are unauthorized additions, conditional or alternate pay items, or irregularities of any kind that make the proposal incomplete, indefinite, or otherwise ambiguous.

c. If the proposal does not contain a unit price for each pay item listed in the proposal, except in the case of authorized alternate pay items, for which the Bidder is not required to furnish a unit price.

d. If the proposal contains unit prices that are obviously unbalanced.

e. If the proposal is not accompanied by the proposal guaranty specified by Owner.

f. If the applicable Disadvantaged Business Enterprise information is incomplete.

Owner reserves the right to reject any irregular proposal and the right to waive technicalities if such waiver is in the best interest of Owner and conforms to local laws and ordinances pertaining to the letting of construction contracts.

20-10 Bid guarantee. Each separate proposal shall be accompanied by a bid bond, certified check, or other specified acceptable collateral, in the amount specified in the proposal form. Such bond, check, or collateral, shall be made payable to Owner.

20-11 Delivery of proposal. Each proposal submitted shall be placed in a sealed envelope plainly marked with the project number, location of airport, and name and business address of the Bidder on the outside. When sent by mail, preferably registered, the sealed proposal, marked as indicated above, should be enclosed in an additional envelope. No proposal will be considered unless received at the place specified in the advertisement or as modified by Addendum before the time specified for opening all bids. Proposals received after the bid opening time shall be returned to the Bidder unopened.

20-12 Withdrawal or revision of proposals. A Bidder may withdraw or revise (by withdrawal of one proposal and submission of another) a proposal provided that the Bidder's request for withdrawal is received by Owner in writing before the time specified for opening bids. Revised proposals must be received at the place specified in the advertisement before the time specified for opening all bids.

20-13 Public opening of proposals. Proposals shall be opened, and read, publicly at the time and place specified in the advertisement. Bidders, their authorized agents, and other interested persons are invited to attend. Proposals that have been withdrawn (by written or telegraphic request) or received after the time specified for opening bids shall be returned to the Bidder unopened.

20-14 Disqualification of Bidders. A Bidder shall be considered disqualified for any of the following reasons:

a. Submitting more than one proposal from the same partnership, firm, or corporation under the same or different name.

b. Evidence of collusion among Bidders. Bidders participating in such collusion shall be disqualified as Bidders for any future work of Owner until any such participating Bidder has been reinstated by Owner as a qualified Bidder.

c. If the Bidder is considered to be in "default" for any reason specified in Paragraph 20-04, *Issuance of Proposal Forms,* of this section.

20-15 Discrepancies and Omissions. A Bidder who discovers discrepancies or omissions with the project bid documents shall immediately notify Owner's Engineer of the matter. A Bidder that has doubt as to the true meaning of a project requirement may submit to Owner's Engineer a written request for interpretation no later than **three** days prior to bid opening.

Any interpretation of the project bid documents by Owner's Engineer will be by written addendum issued by Owner. Owner will not consider any instructions, clarifications, or interpretations of the bidding documents in any manner other than written addendum.

END OF SECTION 20

Section 30 Award and Execution of Contract

30-01 Consideration of proposals. After the proposals are publicly opened and read, they will be compared on the basis of the summation of the products obtained by multiplying the estimated quantities shown in the proposal by the unit bid prices. If a Bidder's proposal contains a discrepancy between unit bid prices written in words and unit bid prices written in numbers, the unit bid price written in words shall govern.

Until the award of a contract is made, Owner reserves the right to reject a Bidder's proposal for any of the following reasons:

a. If the proposal is irregular as specified in Section 20, Paragraph 20-09, *Irregular Proposals*.

b. If the Bidder is disqualified for any of the reasons specified Section 20, Paragraph 20-14, *Disqualification of Bidders*.

In addition, until the award of a Contract is made, Owner reserves the right to reject any or all proposals, waive technicalities, if such waiver is in the best interest of Owner and is in conformance with applicable state and local laws or regulations pertaining to the letting of construction contracts; advertise for new proposals; or proceed with the work otherwise. All such actions shall promote Owner's best interests.

30-02 Award of contract. The award of a Contract, if it is to be awarded, shall be made within **90** calendar days of the date specified for publicly opening proposals, unless otherwise specified herein.

If Owner elects to proceed with an award of contract, Owner will make award to the responsible Bidder whose bid, conforming with all the material terms and conditions of the bid documents, is the lowest in price.

30-03 Cancellation of award. Owner reserves the right to cancel the award without liability to the Bidder, except return of proposal guaranty, at any time before a contract has been fully executed by all parties and is approved by Owner in accordance with Paragraph 30-07 *Approval of Contract*.

30-04 Return of proposal guaranty. All proposal guaranties, except those of the two lowest Bidders, will be returned immediately after Owner has made a comparison of bids as specified in the Paragraph 30-01, *Consideration of Proposals.* Proposal guaranties of the two lowest Bidders will be retained by Owner until such time as an award is made, at which time, the unsuccessful Bidder's proposal guaranty will be returned. The successful Bidder's proposal guaranty will be returned as soon as Owner receives the contract bonds as specified in Paragraph 30-05, *Requirements of Contract Bonds.*

30-05 Requirements of contract bonds. At the time of the execution of the contract, the successful Bidder shall furnish Owner a surety bond or bonds that have been fully executed by the Bidder and the surety guaranteeing the performance of the work and the payment of all legal debts that may be incurred by reason of Contractor's performance of the work. The surety and the form of the bond or bonds shall be acceptable to Owner. Unless otherwise specified in this subsection, the surety bond or bonds shall be in a sum equal to the full amount of the contract.

30-06 Execution of contract. The successful Bidder shall sign (execute) the necessary agreements for entering into the Contract and return the signed Contract to Owner, along with the fully executed surety bond or bonds specified in Paragraph 30-05, *Requirements of Contract Bonds,* of this Section, within **10** calendar days from the date mailed or otherwise delivered to the successful Bidder.

30-07 Approval of contract. Upon receipt of the Contract and Contract Bond or Bonds that have been executed by the successful Bidder, Owner shall complete the execution of the Contract in accordance with local laws or ordinances and return the fully executed Contract to Contractor. Delivery of the fully executed contract to Contractor shall constitute Owner's approval to be bound by the successful Bidder's proposal and the terms of the Contract.

30-08 Failure to execute contract. Failure of the successful Bidder to execute the contract and furnish an acceptable surety bond or bonds within the period specified in Paragraph 30-06, *Execution of Contract,* of this section shall be just cause for cancellation of the award and forfeiture of the proposal guaranty, not as a penalty, but as liquidated damages to Owner.

END OF SECTION 30

Section 40 Scope of Work

40-01 Intent of contract. The intent of the Contract is to provide for construction and completion, in every detail, of the Work described. It is further intended that Contractor shall furnish all labor, materials, equipment, tools, transportation, and supplies required to complete the Work in accordance with the Plans, Specifications, and terms of the Contract.

40-02 Alteration of work and quantities. Owner reserves the right to make such changes in quantities and work as may be necessary or desirable to complete, in a satisfactory manner, the original intended Work. Unless otherwise specified in the Contract, Owner's Engineer or RPR shall be and is hereby authorized to make, in writing, such in-scope alterations in the work and variation of quantities as may be necessary to complete the work, provided such action does not represent a significant change in the character of the Work.

For purpose of this Section, a significant change in character of work means: any change that is outside the current contract scope of work; any change (increase or decrease) in the total contract cost by more than 25 percent; or any change in the total cost of a major contract item by more than 25 percent.

Work alterations and quantity variances that do not meet the definition of significant change in character of work shall not invalidate the contract nor release the surety. Contractor agrees to accept payment for such work alterations and quantity variances in accordance with Section 90, Paragraph 90-03, *Compensation for Altered Quantities*.

Should the value of altered work or quantity variance meet the criteria for significant change in character of work, such altered work and quantity variance shall be covered by a supplemental agreement. Supplemental agreements shall also require consent of Contractor's surety and separate performance and payment bonds. If Owner and Contractor are unable to agree on a unit adjustment for any contract item that requires a supplemental agreement, Owner reserves the right to terminate the contract with respect to the item and make other arrangements for its completion.

40-03 Omitted items. Owner, Owner's Engineer, or the RPR may provide written notice to Contractor to omit from the Work any Contract Item that does not meet the definition of major Contract Item. Major Contract Items may be omitted by a supplemental agreement. Such omission of Contract Items shall not invalidate any other contract provision or requirement.

Should a Contract Item be omitted or otherwise ordered to be non-performed, Contractor shall be paid for all Work performed toward completion of such item prior to the date of the order to omit such item. Payment for Work performed shall be in accordance with Section 90, Paragraph 90-04, *Payment for Omitted Items*.

40-04 Extra work. Should acceptable completion of the Contract require Contractor to perform an item of work not provided for in the awarded Contract as previously modified by change order or supplemental agreement, Owner may issue a Change Order to cover the necessary extra work. Change orders for extra work shall contain agreed unit prices for performing the Change Order work in accordance with the requirements specified in the order, and shall contain any adjustment to the contract time that, in the RPR's opinion, is necessary for completion of the extra work.

When determined by the RPR to be in Owner's best interest, the RPR may order Contractor to proceed with extra work as provided in Section 90, Paragraph 90-05, *Payment for Extra Work*. Extra work that is necessary for acceptable completion of the project, but is not within the general scope of the work covered by the original contract shall be covered by a supplemental agreement as defined in Section 10, Paragraph 10-59, *Supplemental Agreement*.

If extra work is essential to maintaining the project critical path, RPR may order Contractor to commence the extra work under a Time and Material contract method. Once sufficient detail is available to establish the level of effort necessary for the extra work, Owner shall initiate a change order or supplemental agreement to cover the extra work.

Any claim for payment of extra work that is not covered by written agreement (change order or supplemental agreement) shall be rejected by Owner.

40-05 Maintenance of traffic. It is the explicit intention of the contract that the safety of aircraft, as well as Contractor's equipment and personnel, is the most important consideration. Contractor shall maintain traffic in the manner detailed in the Construction Safety and Phasing Plan (CSPP).

a. It is understood and agreed that Contractor shall provide for the free and unobstructed movement of aircraft in the air operations areas (AOAs) of the airport with respect to their own operations and the operations of all subcontractors as specified in Section 80, Paragraph 80-04, *Limitation of Operations*. It is further understood and agreed that Contractor shall provide for the uninterrupted operation of visual and electronic signals (including power supplies thereto) used in the guidance of aircraft while operating to, from, and upon the airport as specified in Section 70, Paragraph 70-15, *Contractor's Responsibility for Utility Service and Facilities of Others*.

b. With respect to their own operations and the operations of all subcontractors, Contractor shall provide marking, lighting, and other acceptable means of identifying personnel, equipment, vehicles, storage areas, and any work area or condition that may be hazardous to the operation of aircraft, fire-rescue equipment, or maintenance vehicles at the airport in accordance with the Construction Safety and Phasing Plan (CSPP) and the Safety Plan Compliance Document (SPCD).

c. When the Contract requires the maintenance of an existing road, street, or highway during Contractor's performance of work that is otherwise provided for in the contract, plans, and specifications, Contractor shall keep the road, street, or highway open to all traffic and shall provide maintenance as may be required to accommodate traffic. Contractor, at their expense, shall be responsible for the repair to equal or better than preconstruction conditions of any damage caused by Contractor's equipment and personnel. Contractor shall furnish, erect, and maintain barricades, warning signs, flag person, and other traffic control devices in reasonable conformity with the Manual on Uniform Traffic Control Devices (MUTCD) (http://mutcd.fhwa.dot.gov/), unless otherwise specified. Contractor shall also construct and maintain in a safe condition any temporary connections necessary for ingress to and egress from abutting property or intersecting roads, streets or highways. Unless otherwise specified herein, Contractor will not be required to furnish snow removal for such existing road, street, or highway.

40-06 Removal of existing structures. All existing structures encountered within the established lines, grades, or grading sections shall be removed by Contractor, unless such existing structures are otherwise specified to be relocated, adjusted up or down, salvaged, abandoned in place, reused in the work or to remain in place. The cost of removing such existing structures shall not be measured or paid for directly, but shall be included in the various contract items.

Should Contractor encounter an existing structure (above or below ground) in the work for which the disposition is not indicated on the plans, the Resident Project Representative (RPR) shall be notified prior to disturbing such structure. The disposition of existing structures so encountered shall be immediately determined by the RPR in accordance with the provisions of the contract.

Except as provided in Section 40, paragraph 40-07, *Rights in and Use of Materials Found in the Work*, it is intended that all existing materials or structures that may be encountered (within the lines, grades, or grading sections established for completion of the work) shall be used in the work as otherwise provided for in the contract and shall remain the property of Owner when so used in the work.

40-07 Rights in and use of materials found in the work. Should Contractor encounter any material such as (but not restricted to) sand, stone, gravel, slag, or concrete slabs within the established lines, grades, or grading sections, the use of which is intended by the terms of the contract to be embankment, Contractor may at their own option either:

a. Use such material in another contract item, providing such use is approved by the RPR and is in conformance with the contract specifications applicable to such use; or,

b. Remove such material from the site, upon written approval of the RPR; or

c. Use such material for Contractor's own temporary construction on site; or,

d. Use such material as intended by the terms of the contract.

Should Contractor wish to exercise option a., b., or c., Contractor shall request the RPR's approval in advance of such use.

Should the RPR approve Contractor's request to exercise option a., b., or c., Contractor shall be paid for the excavation or removal of such material at the applicable contract price. Contractor shall replace, at their expense, such removed or excavated material with an agreed equal volume of material that is acceptable for use in constructing embankment, backfills, or otherwise to the extent that such replacement material is needed to complete the contract work. Contractor shall not be charged for use of such material used in the work or removed from the site.

Should the RPR approve Contractor's exercise of option a., Contractor shall be paid, at the applicable contract price, for furnishing and installing such material in accordance with requirements of the contract item in which the material is used.

It is understood and agreed that Contractor shall make no claim for delays by reason of their own exercise of option a., b., or c.

Contractor shall not excavate, remove, or otherwise disturb any material, structure, or part of a structure which is located outside the lines, grades, or grading sections established for the work, except where such excavation or removal is provided for in the contract, plans, or specifications.

40-08 Final cleanup. Upon completion of the work and before acceptance and final payment will be made, Contractor shall remove from the site all machinery, equipment, surplus and discarded materials, rubbish, temporary structures, and stumps or portions of trees. Contractor shall cut all brush and woods within the limits indicated and shall leave the site in a neat and presentable condition. Material cleared from the site and deposited on adjacent property will not be considered as having been disposed of satisfactorily, unless Contractor has obtained the written permission of the property Owner.

END OF SECTION 40

Section 50 Control of Work

50-01 Authority of the Resident Project Representative (RPR). The RPR has final authority regarding the interpretation of project specification requirements. The RPR shall determine acceptability of the quality of materials furnished, method of performance of Work performed, and the manner and rate of performance of the Work. The RPR does not have the authority to accept Work that does not conform to Specification requirements.

50-02 Conformity with plans and specifications. All Work and all materials furnished shall be in reasonably close conformity with the lines, grades, grading sections, cross-sections, dimensions, material requirements, and testing requirements that are specified (including specified tolerances) in the Contract, Plans, or Specifications.

If the RPR finds the materials furnished, Work performed, or the finished product not within reasonably close conformity with the Plans and Specifications, but that the portion of the Work affected will, in their opinion, result in a finished product having a level of safety, economy, durability, and workmanship acceptable to Owner, the RPR will advise Owner of their determination that the affected Work be accepted and remain in place. The RPR will document the determination and recommend to Owner a basis of acceptance that will provide for an adjustment in the contract price for the affected portion of the Qork. Changes in the contract price must be covered by contract change order or supplemental agreement as applicable.

If the RPR finds the materials furnished, Work performed, or the finished product are not in reasonably close conformity with the Plans and Specifications and have resulted in an unacceptable finished product, the affected Work or materials shall be removed and replaced or otherwise corrected by and at the expense of Contractor in accordance with the RPR's written orders.

The term "reasonably close conformity" shall not be construed as waiving Contractor's responsibility to complete the work in accordance with the Contract, Plans, and Specifications. The term shall not be construed as waiving the RPR's responsibility to insist on strict compliance with the requirements of the Contract, Plans, and Specifications during Contractor's execution of the Work, when, in the RPR's opinion, such compliance is essential to provide an acceptable finished portion of the Work.

The term "reasonably close conformity" is also intended to provide the RPR with the authority, after consultation with the Sponsor and FAA, to use sound engineering judgment in their determinations to accept work that is not in strict conformity but will provide a finished product equal to or better than that required by the requirements of the Contract, Plans and Specifications.

The RPR will not be responsible for Contractor's means, methods, techniques, sequences, or procedures of construction or the safety precautions incident thereto.

50-03 Coordination of Contract, Plans, and Specifications. The Contract, Plans, Specifications, and all referenced standards cited are essential parts of the contract requirements. If electronic files are provided and used on the Project and there is a conflict between the electronic files and hard copy plans, the hard copy plans shall govern. A requirement occurring in one is as binding as though occurring in all. They are intended to be complementary and to describe and provide for a complete Work. In case of discrepancy, calculated dimensions will govern over scaled dimensions; Contract Technical Specifications shall govern over Contract General Provisions, Plans, cited standards for materials or testing, and cited advisory circulars (ACs); Contract General Provisions shall govern over Plans, cited standards for materials or testing, and cited ACs; Plans shall govern over cited standards for materials or testing and cited ACs. If any paragraphs

contained in the Special Provisions conflict with General Provisions or Technical Specifications, the Special Provisions shall govern.

From time to time, discrepancies within cited testing standards occur due to the timing of the change, edits, and/or replacement of the standards. If Contractor discovers any apparent discrepancy within standard test methods, Contractor shall immediately ask the RPR for an interpretation and decision, and such decision shall be final.

Contractor shall not take advantage of any apparent error or omission on the plans or specifications. In the event Contractor discovers any apparent error or discrepancy; Contractor shall immediately notify Owner or the designated representative in writing requesting their written interpretation and decision.

50-04 List of Special Provisions.

SP-1 Scope of Work
SP-2 Contract Documents
SP-3 Time and Order of Completion
SP-4 Limitation of Operation
SP-5 Construction Activity
SP-6 Affidavit of Bills Paid
SP-7 Calendar Day
SP-8 Protection of Property
SP-9 Electric Power and Natural Gas
SP-10 Lines and Grades
SP-11 Water for Construction
SP-12 Material Tests
SP-13 Barricades, Signs, and Hazard Markings
SP-14 Prevention of Air and Water Pollution
SP-15 Public Convenience and Safety
SP-16 Final Cleaning Up
SP-17 Insurance
SP-18 Removal and Disposal of Structures, Utilities and Obstructions
SP-19 Conformity with Plans and Allowable Deviations
SP-20 Removal of Defective and Unauthorized Work
SP-21 Disputed Claims for Extra Work
SP-22 Federal Participation
SP-23 Indemnification
SP-24 Contractor's Responsibility for Work
SP-25 Correction of Faulty Work after Final Payment
SP-26 Texas State Sales Tax
SP-27 Separate Contracts
SP-28 Trench Safety
SP-29 Load Restrictions
SP-30 Notice to Proceed
SP-31 Payment for Materials on Hand
SP-32 Weighing and Measuring Equipment
SP-33 Progress Schedule
SP-34 Average Climatic Range
SP-35 Substantially Complete
SP-36 Submittals
SP-37 Geotechnical Information
SP-38 Sovereign Immunity
SP-39 Governing Law and Venue
SP-40 Third-Party Beneficiary

SP-41 Releases
SP-42 Independent Contractor
SP-43 Notice of Alleged Breach; Statutory Prerequisites
SP-44 Assignment
SP-45 Waiver of Attorney's Fees
SP-46 Prompt Pay Act
SP-47 Payment
SP-48 Project Closeout
SP-49 Disclosure of Interested Parties
SP-50 Parkhill/RPR Authority and Duty
SP-51 Anti-Boycott Statutes
SP-52 Partial Payments

50-05 Cooperation of Contractor. Contractor shall be supplied with an electronic PDF of the Plans and Specifications. Contractor shall have available on the construction site at all times one hardcopy each of the Plans and Specifications. Additional hard copies of Plans and Specifications may be obtained by Contractor for the cost of reproduction.

Contractor shall give constant attention to the Work to facilitate the progress thereof, and shall cooperate with the RPR and their inspectors and with other Contractors in every way possible. Contractor shall have a competent superintendent on the work at all times who is fully authorized as their agent on the Work. The superintendent shall be capable of reading and thoroughly understanding the Plans and Specifications and shall receive and fulfill instructions from the RPR or their authorized representative.

50-06 Cooperation between Contractors. Owner reserves the right to contract for and perform other or additional Work on or near the Work covered by this Contract.

When separate contracts are let within the limits of any one project, each Contractor shall conduct the Work not to interfere with or hinder the progress of completion of the Work being performed by other Contractors. Contractors working on the same Project shall cooperate with each other as directed.

Each Contractor involved shall assume all liability, financial or otherwise, in connection with their own Contract and shall protect and hold harmless Owner from any and all damages or claims that may arise because of inconvenience, delays, or loss experienced because of the presence and operations of other Contractors working within the limits of the same project.

Contractor shall arrange their work and shall place and dispose of the materials being used to not interfere with the operations of the other Contractors within the limits of the same project. Contractor shall join their work with that of the others in an acceptable manner and shall perform it in proper sequence to that of the others.

50-07 Construction layout and stakes. Engineer/RPR shall establish necessary horizontal and vertical control. The establishment of Survey Control and/or reestablishment of survey control shall be by a State Licensed Land Surveyor. Contractor is responsible for preserving integrity of horizontal and vertical controls established by Engineer/RPR. In case of negligence on the part of Contractor or their employees, resulting in the destruction of any horizontal and vertical control, the resulting costs will be deducted as a liquidated damage against Contractor.

Prior to the start of construction, Contractor will check all control points for horizontal and vertical accuracy and certify in writing to the RPR that Contractor concurs with survey control established for the project. All lines, grades and measurements from control points necessary for the proper execution and control of the work on this project will be provided to the RPR. Contractor is responsible to establish all layout required for the construction of the Project.

Copies of survey notes will be provided to the RPR for each area of construction and for each placement of material as specified to allow the RPR to make periodic checks for conformance with plan grades,

alignments and grade tolerances required by the applicable material specifications. Surveys will be provided to the RPR prior to commencing work items that cover or disturb the survey staking. Survey(s) and notes shall be provided in the following format(s): **DWG and PDF**.

Laser, GPS, String line, or other automatic control shall be checked with temporary control, as necessary. In the case of error, on the part of Contractor, their surveyor, employees or subcontractors, resulting in established grades, alignment or grade tolerances that do not concur with those specified or shown on the Plans, Contractor is solely responsible for correction, removal, replacement and all associated costs at no additional cost to Owner.

No direct payment will be made, unless otherwise specified in contract documents, for this labor, materials, or other expenses. The cost shall be included in the price of the bid for the various items of the Contract.

50-08 Authority and duties of Quality Assurance (QA) inspectors. QA inspectors shall be authorized to inspect all Work done and all material furnished. Such QA inspection may extend to all or any part of the work and to the preparation, fabrication, or manufacture of the materials to be used. QA inspectors are not authorized to revoke, alter, or waive any provision of the Contract. QA inspectors are not authorized to issue instructions contrary to the plans and specifications or to act as foreman for Contractor.

QA Inspectors are authorized to notify Contractor or their representatives of any failure of the Work or materials to conform to the requirements of the Contract, Plans, or Specifications and to reject such nonconforming materials in question until such issues can be referred to the RPR for a decision.

50-09 Inspection of the work. All materials and each part or detail of the Work shall be subject to inspection. The RPR shall be allowed access to all parts of the Work and shall be furnished with such information and assistance by Contractor as is required to make a complete and detailed inspection.

If the RPR requests it, Contractor, at any time before acceptance of the Work, shall remove or uncover such portions of the finished Work as may be directed. After examination, Contractor shall restore said portions of the Work to the standard required by the specifications. Should the Work thus exposed or examined prove acceptable, the uncovering, or removing, and the replacing of the covering or making good of the parts removed will be paid for as extra work; but should the Work so exposed or examined prove unacceptable, the uncovering, or removing, and the replacing of the covering or making good of the parts removed will be at Contractor's expense.

Provide advance written notice to the RPR of work Contractor plans to perform each week and each day. Any work done or materials used without written notice and allowing opportunity for inspection by the RPR may be ordered removed and replaced at Contractor's expense.

Should the Contract Work include relocation, adjustment, or any other modification to existing facilities, not the property of the (Contract) Owner, authorized representatives of Owners of such facilities shall have the right to inspect such work. Such inspection shall in no sense make any facility owner a party to the contract and shall in no way interfere with the rights of the parties to this Contract.

50-10 Removal of unacceptable and unauthorized work. All Work that does not conform to the requirements of the Contract, Plans, and Specifications will be considered unacceptable, unless otherwise determined acceptable by the RPR as provided in Paragraph 50-02, *Conformity with Plans and Specifications*.

Unacceptable Work, whether the result of poor workmanship, use of defective materials, damage through carelessness, or any other cause found to exist prior to the Final Acceptance of the Work, shall be removed immediately and replaced in an acceptable manner in accordance with the provisions of Section 70, Paragraph 70-14, *Contractor's Responsibility for Work*.

No removal work made under provision of this paragraph shall be done without lines and grades having been established by the RPR. Work done contrary to the instructions of the RPR, work done beyond the lines shown on the plans or as established by the RPR, except as herein specified, or any extra work done

without authority, will be considered as unauthorized and will not be paid for under the provisions of the contract. Work so done may be ordered removed or replaced at Contractor's expense.

Upon failure on the part of Contractor to comply with any order of the RPR made under the provisions of this subsection, the RPR will have authority to cause unacceptable work to be remedied or removed and replaced; and unauthorized work to be removed and recover the resulting costs as a liquidated damage against Contractor.

50-11 Load restrictions. Contractor shall comply with all legal load restrictions in the hauling of materials on public roads beyond the limits of the Work. A special permit will not relieve Contractor of liability for damage that may result from the moving of material or equipment.

The operation of equipment of such weight or so loaded as to cause damage to structures or to any other type of construction will not be permitted. Hauling of materials over the base course or surface course under construction shall be limited as directed. No loads will be permitted on a concrete pavement, base, or structure before the expiration of the curing period. Contractor, at their own expense, shall be responsible for the repair to equal or better than preconstruction conditions of any damage caused by Contractor's equipment and personnel.

50-12 Maintenance during construction. Contractor shall maintain the work during construction and until the work is accepted. Maintenance shall constitute continuous and effective work prosecuted day by day, with adequate equipment and forces so that the work is maintained in satisfactory condition at all times.

In the case of a contract for the placing of a course upon a course or subgrade previously constructed, Contractor shall maintain the previous course or subgrade during all construction operations.

All costs of maintenance work during construction and before the project is accepted shall be included in the unit prices bid on the various contract items, and Contractor will not be paid an additional amount for such work.

50-13 Failure to maintain the work. Should Contractor at any time fail to maintain the Work as provided in Paragraph 50-12, *Maintenance during Construction*, the RPR shall immediately notify Contractor of such noncompliance. Such notification shall specify a reasonable time within which Contractor shall be required to remedy such unsatisfactory maintenance condition. The time specified will give due consideration to the exigency that exists.

Should Contractor fail to respond to the RPR's notification, Owner may suspend any work necessary for Owner to correct such unsatisfactory maintenance condition, depending on the exigency that exists. Any maintenance cost incurred by Owner, shall be recovered as a liquidated damage against Contractor.

50-14 Partial acceptance. If at any time during the execution of the Project Contractor substantially completes a usable unit or portion of the work, the occupancy of which will benefit Owner, Contractor may request the RPR to make final inspection of that unit. If the RPR finds upon inspection that the unit has been satisfactorily completed in compliance with the Contract, the RPR may accept it as being complete, and Contractor may be relieved of further responsibility for that unit. Such partial acceptance and beneficial occupancy by Owner shall not void or alter any provision of the Contract.

50-15 Final acceptance. Upon due notice from Contractor of presumptive completion of the entire Project, the RPR and Owner will make an inspection. If all construction provided for and contemplated by the Contract is found to be complete in accordance with the Contract, Plans, and Specifications, such inspection shall constitute the Final Inspection. The RPR shall notify Contractor in writing of Final Acceptance as of the date of the Final Inspection.

If, however, the inspection discloses any Work, in whole or in part, as being unsatisfactory, the RPR will notify Contractor and Contractor shall correct the unsatisfactory Work. Upon correction of the work, another inspection will be made which shall constitute the Final Inspection, provided the Work has been

satisfactorily completed. In such event, the RPR will make the final acceptance and notify Contractor in writing of this acceptance as of the date of Final Inspection.

50-16 Claims for adjustment and disputes. If for any reason Contractor deems that additional compensation is due for work or materials not clearly provided for in the Contract, Plans, or Specifications or previously authorized as extra work, Contractor shall notify the RPR in writing of their intention to claim such additional compensation before Contractor begins the Work on which Contractor bases the claim. If such notification is not given or the RPR is not afforded proper opportunity by Contractor for keeping strict account of actual cost as required, then Contractor hereby agrees to waive any claim for such additional compensation. Such notice by Contractor and the fact that the RPR has kept account of the cost of the Work shall not in any way be construed as proving or substantiating the validity of the claim. When the Work on which the claim for additional compensation is based has been completed, Contractor shall, within 10 calendar days, submit a written claim to the RPR who will present it to Owner for consideration in accordance with local laws or ordinances.

Nothing in this subsection shall be construed as a waiver of Contractor's right to dispute final payment based on differences in measurements or computations.

END OF SECTION 50

Section 60 Control of Materials

60-01 Source of supply and quality requirements. The materials used in the Work shall conform to the requirements of the Contract, Plans, and Specifications. Unless otherwise specified, such materials that are manufactured or processed shall be new (as compared to used or reprocessed).

In order to expedite the inspection and testing of materials, Contractor shall furnish documentation to the RPR as to the origin, composition, and manufacture of all materials to be used in the Work. Documentation shall be furnished promptly after execution of the contract but, in all cases, prior to delivery of such materials.

At the RPR's option, materials may be approved at the source of supply before delivery. If it is found after trial that sources of supply for previously approved materials do not produce specified products, Contractor shall furnish materials from other sources.

Contractor shall furnish airport lighting equipment that meets the requirements of the specifications; and is listed in AC 150/5345-53, *Airport Lighting Equipment Certification Program* and *Addendum*, that is in effect on the date of advertisement.

60-02 Samples, tests, and cited specifications. All materials used in the Work shall be inspected, tested, and approved by the RPR before incorporation in the work unless otherwise designated. Any Work in which untested materials are used without approval or written permission of the RPR shall be performed at Contractor's risk. Materials found to be unacceptable and unauthorized will not be paid for and, if directed by the RPR, shall be removed at Contractor's expense.

Unless otherwise designated, quality assurance tests will be made by and at the expense of Owner in accordance with the cited standard methods of ASTM, American Association of State Highway and Transportation Officials (AASHTO), federal specifications, Commercial Item Descriptions, and all other cited methods, which are current on the date of Advertisement for Bids.

The testing organizations performing on-site quality assurance field tests shall have copies of all referenced standards on the construction site for use by all technicians and other personnel. Unless otherwise designated, samples for quality assurance will be taken by a qualified representative of the RPR. All materials being used are subject to inspection, test, or rejection at any time prior to or during incorporation into the Work. Copies of all tests will be furnished to Contractor's representative at their request after review and approval of the RPR.

A copy of all Contractor QC test data shall be provided to the RPR daily, along with printed reports, in an approved format, on a weekly basis. After completion of the Project, and prior to Final Payment, Contractor shall submit a final report to the RPR showing all test data reports, plus an analysis of all results showing ranges, averages, and corrective action taken on all failing tests.

60-03 Certification of compliance/analysis (COC/COA). The RPR may permit the use, prior to sampling and testing, of certain materials or assemblies when accompanied by manufacturer's COC stating that such materials or assemblies fully comply with the requirements of the Contract. The certificate shall be signed by the manufacturer. Each lot of such materials or assemblies delivered to the Work must be accompanied by a certificate of compliance in which the lot is clearly identified. The COA is the manufacturer's COC and includes all applicable test results.

Materials or assemblies used on the basis of certificates of compliance may be sampled and tested at any time and if found not to be in conformity with Contract requirements will be subject to rejection whether in place or not.

The form and distribution of certificates of compliance shall be as approved by the RPR.

When a material or assembly is specified by "brand name or equal" and Contractor elects to furnish the specified "or equal," Contractor shall be required to furnish the manufacturer's certificate of compliance for each lot of such material or assembly delivered to the Work. Such certificate of compliance shall clearly identify each lot delivered and shall certify as to:

a. Conformance to the specified performance, testing, quality, or dimensional requirements; and,

b. Suitability of the material or assembly for the use intended in the Contract Work.

The RPR shall be the sole judge as to whether the proposed "or equal" is suitable for use in the work.

The RPR reserves the right to refuse permission for use of materials or assemblies on the basis of certificates of compliance.

60-04 Plant inspection. The RPR or their authorized representative may inspect, at its source, any specified material or assembly to be used in the Work. Manufacturing plants may be inspected from time to time for the purpose of determining compliance with specified manufacturing methods or materials to be used in the Work and to obtain samples required for acceptance of the material or assembly.

Should the RPR conduct plant inspections, the following conditions shall exist:

a. The RPR shall have the cooperation and assistance of Contractor and the producer with whom Contractor has contracted for materials.

b. The RPR shall have full entry at all reasonable times to such parts of the plant that concern the manufacture or production of the materials being furnished.

c. If required by the RPR, Contractor shall arrange for adequate office or working space that may be reasonably needed for conducting plant inspections. Place office or working space in a convenient location with respect to the plant.

It is understood and agreed that Owner shall have the right to retest any material that has been tested and approved at the source of supply after it has been delivered to the site. The RPR shall have the right to reject only material which, when retested, does not meet the requirements of the Contract, Plans, or Specifications.

60-05 Engineer/ Resident Project Representative (RPR) field office. An Engineer/RPR field office is not required.

60-06 Storage of materials. Materials shall be stored to assure the preservation of their quality and fitness for the Work. Stored materials, even though approved before storage, may again be inspected prior to their use in the work. Stored materials shall be located to facilitate their prompt inspection. Contractor shall coordinate the storage of all materials with the RPR. Materials to be stored on airport property shall not create an obstruction to air navigation nor shall they interfere with the free and unobstructed movement of aircraft. Unless otherwise shown on the Plans and/or CSPP, the storage of materials and the location of Contractor's plant and parked equipment or vehicles shall be as directed by the RPR. Private property shall not be used for storage purposes without written permission of Owner or lessee of such property. Contractor shall make all arrangements and bear all expenses for the storage of materials on private property. Upon request, Contractor shall furnish the RPR a copy of the property Owner's permission.

All storage sites on private or airport property shall be restored to their original condition by Contractor at their expense, except as otherwise agreed to (in writing) by Owner or lessee of the property.

60-07 Unacceptable materials. Any material or assembly that does not conform to the requirements of the Contract, Plans, or Specifications shall be considered unacceptable and shall be rejected. Contractor shall remove any rejected material or assembly from the site of the Work, unless otherwise instructed by the RPR.

Rejected material or assembly, the defects of which have been corrected by Contractor, shall not be returned to the site of the Work until such time as the RPR has approved its use in the Work.

60-08 Owner furnished materials. Contractor shall furnish all materials required to complete the Work, except those specified, if any, to be furnished by Owner. Owner-furnished materials shall be made available to Contractor at the location specified.

All costs of handling, transportation from the specified location to the site of Work, storage, and installing Owner-furnished materials shall be included in the unit price bid for the Contract item in which such Owner-furnished material is used.

After any Owner-furnished material has been delivered to the location specified, Contractor shall be responsible for any demurrage, damage, loss, or other deficiencies that may occur during Contractor's handling, storage, or use of such Owner-furnished material. Owner will deduct from any monies due or to become due Contractor any cost incurred by Owner in making good such loss due to Contractor's handling, storage, or use of Owner-furnished materials.

END OF SECTION 60

Section 70 Legal Regulations and Responsibility to Public

70-01 Laws to be observed. Contractor shall keep fully informed of all federal and state laws, all local laws, ordinances, and regulations and all orders and decrees of bodies or tribunals having any jurisdiction or authority, which in any manner affect those engaged or employed on the Work, or which in any way affect the conduct of the Work. Contractor shall at all times observe and comply with all such laws, ordinances, regulations, orders, and decrees; and shall protect and indemnify Owner and all their officers, agents, or servants against any claim or liability arising from or based on the violation of any such law, ordinance, regulation, order, or decree, whether by Contractor or Contractor's employees.

70-02 Permits, licenses, and taxes. Contractor shall procure all permits and licenses, pay all charges, fees, and taxes, and give all notices necessary and incidental to the due and lawful execution of the Work.

70-03 Patented devices, materials, and processes. If Contractor is required or desires to use any design, device, material, or process covered by letters of patent or copyright, Contractor shall provide for such use by suitable legal agreement with the Patentee or Owner. Contractor and the surety shall indemnify and hold harmless Owner, any third party, or political subdivision from any and all claims for infringement by reason of the use of any such patented design, device, material or process, or any trademark or copyright, and shall indemnify Owner for any costs, expenses, and damages which it may be obliged to pay by reason of an infringement, at any time during the execution or after the completion of the Work.

70-04 Restoration of surfaces disturbed by others. Owner reserves the right to authorize the construction, reconstruction, or maintenance of any public or private utility service, FAA or National Oceanic and Atmospheric Administration (NOAA) facility, or a utility service of another government agency at any time during the progress of the work. To the extent that such construction, reconstruction, or maintenance has been coordinated with Owner, such authorized work (by others) must be shown on the Plans and is indicated as follows: **None**.

Except as listed above, Contractor shall not permit any individual, firm, or corporation to excavate or otherwise disturb such utility services or facilities located within the limits of the work without the written permission of the RPR.

Should Owner of public or private utility service, FAA, or NOAA facility, or a utility service of another government agency be authorized to construct, reconstruct, or maintain such utility service or facility during the progress of the Work, Contractor shall cooperate with such Owners by arranging and performing the Work in this Contract to facilitate such construction, reconstruction or maintenance by others whether or not such work by others is listed above. When ordered as extra work by the RPR, Contractor shall make all necessary repairs to the Work which are due to such authorized work by others, unless otherwise provided for in the Contract, Plans, or Specifications. It is understood and agreed that Contractor shall not be entitled to make any claim for damages due to such authorized work by others or for any delay to the work resulting from such authorized work.

70-05 Federal Participation. The United States Government has agreed to reimburse Owner for some portion of the contract costs. The Contract Work is subject to the inspection and approval of duly authorized representatives of the FAA Administrator. No requirement of this Contract shall be construed as making the United States a party to the Contract nor will any such requirement interfere, in any way, with the rights of either party to the Contract.

70-06 Sanitary, health, and safety provisions. Contractor's worksite and facilities shall comply with applicable federal, state, and local requirements for health, safety, and sanitary provisions.

70-07 Public convenience and safety. Contractor shall control their operations and those of their subcontractors and all suppliers, to assure the least inconvenience to the traveling public. Under all circumstances, safety shall be the most important consideration.

Contractor shall maintain the free and unobstructed movement of aircraft and vehicular traffic with respect to their own operations and those of their own subcontractors and all suppliers in accordance with Section 40, Paragraph 40-05, *Maintenance of Traffic,* and shall limit such operations for the convenience and safety of the traveling public as specified in Section 80, Paragraph 80-04, *Limitation of Operations*.

Contractor shall remove or control debris and rubbish resulting from its work operations at frequent intervals, and upon the order of the RPR. If the RPR determines the existence of Contractor debris in the work site represents a hazard to airport operations and Contractor is unable to respond in a prompt and reasonable manner, the RPR reserves the right to assign the task of debris removal to a third party and recover the resulting costs as a liquidated damage against Contractor.

70-08 Construction Safety and Phasing Plan (CSPP). Contractor shall complete the Work in accordance with the approved Construction Safety and Phasing Plan (CSPP) developed in accordance with AC 150/5370-2, Operational Safety on Airports During Construction. The CSPP is included with Bid Package.

70-09 Use of explosives. The use of explosives is not permitted on this Project.

70-10 Protection and restoration of property and landscape. Contractor shall be responsible for the preservation of all public and private property and shall protect carefully from disturbance or damage all land monuments and property markers until Engineer/RPR has witnessed or otherwise referenced their location and shall not move them until directed.

Contractor shall be responsible for all damage or injury to property of any character, during the execution of the Work, resulting from any act, omission, neglect, or misconduct in manner or method of executing the Work, or at any time due to defective Work or materials, and said responsibility shall not be released until the Project has been completed and accepted.

When or where any direct or indirect damage or injury is done to public or private property by or on account of any act, omission, neglect, or misconduct in the execution of the Work, or in consequence of the non-execution thereof by Contractor, Contractor shall restore, at their expense, such property to a condition similar or equal to that existing before such damage or injury was done, by repairing, or otherwise restoring as may be directed, or Contractor shall make good such damage or injury in an acceptable manner.

70-11 Responsibility for damage claims. Contractor shall indemnify and hold harmless Engineer/RPR and Owner and their officers, agents, and employees from all suits, actions, or claims, of any character, brought because of any injuries or damage received or sustained by any person, persons, or property on account of the operations of Contractor; or on account of or in consequence of any neglect in safeguarding the work; or through use of unacceptable materials in constructing the Work; or because of any act or omission, neglect, or misconduct of said Contractor; or because of any claims or amounts recovered from any infringements of patent, trademark, or copyright; or from any claims or amounts arising or recovered under the "Workmen's Compensation Act," or any other law, ordinance, order, or decree. Money due Contractor under and by virtue of their own contract considered necessary by Owner for such purpose may be retained for the use of Owner or, in case no money is due, their own surety may be held until such suits, actions, or claims for injuries or damages shall have been settled and suitable evidence to that effect furnished to Owner, except that money due Contractor will not be withheld when Contractor produces satisfactory evidence that he or she is adequately protected by public liability and property damage insurance.

70-12 Third party beneficiary clause. It is specifically agreed between the parties executing the Contract that it is not intended by any of the provisions of any part of the Contract to create for the public or any member thereof, a third-party beneficiary or to authorize anyone not a party to the Contract to maintain a suit for personal injuries or property damage pursuant to the terms or provisions of the Contract.

70-13 Opening sections of the work to traffic. If it is necessary for Contractor to complete portions of the Contract Work for the beneficial occupancy of Owner prior to completion of the entire Contract, such "phasing" of the Work must be specified below and indicated on the approved Construction Safety and Phasing Plan (CSPP) and the Project Plans. When so specified, Contractor shall complete such portions of the Work on or before the date specified or as otherwise specified.

Upon completion of any portion of work listed above, such portion shall be accepted by Owner in accordance with Section 50, Paragraph 50-14, *Partial Acceptance*.

No portion of the Work may be opened by Contractor until directed by Owner in writing. Should it become necessary to open a portion of the Work to traffic on a temporary or intermittent basis, such openings shall be made when, in the opinion of the RPR, such portion of the Work is in an acceptable condition to support the intended traffic. Temporary or intermittent openings are considered to be inherent in the Work and shall not constitute either acceptance of the portion of the Work so opened or a waiver of any provision of the Contract. Any damage to the portion of the Work so opened that is not attributable to traffic which is permitted by Owner shall be repaired by Contractor at their expense.

Contractor shall make their own estimate of the inherent difficulties involved in completing the Work under the conditions herein described and shall not claim any added compensation by reason of delay or increased cost due to opening a portion of the Contract Work.

Contractor must conform to safety standards contained AC 150/5370-2 and the approved CSPP.

Contractor shall refer to the Plans, Specifications, and the approved CSPP to identify barricade requirements, temporary and/or permanent markings, airfield lighting, guidance signs and other safety requirements prior to opening up sections of Work to traffic.

70-14 Contractor's responsibility for work. Until the RPR's final written acceptance of the entire completed Work, excepting only those portions of the work accepted in accordance with Section 50, Paragraph 50-14, *Partial Acceptance*, Contractor shall have the charge and care thereof and shall take every precaution against injury or damage to any part due to the action of the elements or from any other cause, whether arising from the execution or from the non-execution of the Work. Contractor shall rebuild, repair, restore, and make good all injuries or damages to any portion of the Work occasioned by any of the above causes before final acceptance and shall bear the expense thereof except damage to the Work due to unforeseeable causes beyond the control of and without the fault or negligence of Contractor, including but not restricted to acts of God such as earthquake, tidal wave, tornado, hurricane or other cataclysmic phenomenon of nature, or acts of the public enemy or of government authorities.

If the Work is suspended for any cause whatever, Contractor shall be responsible for the Work and shall take such precautions necessary to prevent damage to the Work. Contractor shall provide for normal drainage and shall erect necessary temporary structures, signs, or other facilities at their own expense. During such period of suspension of Work, Contractor shall properly and continuously maintain in an acceptable growing condition all living material in newly established planting, seeding, and sodding furnished under the contract, and shall take adequate precautions to protect new tree growth and other important vegetative growth against injury.

70-15 Contractor's responsibility for utility service and facilities of others. As provided in Paragraph 70-04, *Restoration of Surfaces Disturbed by Others*, Contractor shall cooperate with Owner of any public or private utility service, FAA or NOAA, or a utility service of another government agency that may be authorized by Owner to construct, reconstruct or maintain such utility services or facilities during the progress of the Work. In addition, Contractor shall control their operations to prevent the unscheduled interruption of such utility services and facilities.

To the extent that such public or private utility services, FAA, or NOAA facilities, or utility services of another governmental agency are known to exist within the limits of the Contract Work, the approximate locations have been indicated on the plans and/or in the Contract Documents.

It is understood and agreed that Owner does not guarantee the accuracy or the completeness of the location information relating to existing utility services, facilities, or structures that may be shown on the Plans or encountered in the Work. Any inaccuracy or omission in such information shall not relieve Contractor of the responsibility to protect such existing features from damage or unscheduled interruption of service.

It is further understood and agreed that Contractor shall, upon execution of the contract, notify Owners of all utility services or other facilities of their plan of operations. Such notification shall be in writing addressed to "The Person to Contact" as provided in this paragraph and Paragraph 70-04, *Restoration of Surfaces Disturbed By Others*. A copy of each notification shall be given to the RPR.

In addition to the general written notification provided, it shall be the responsibility of Contractor to keep such individual Owners advised of changes in their plan of operations that would affect such Owners.

Prior to beginning the Work in the general vicinity of an existing utility service or facility, Contractor shall again notify each such Owner of their plan of operation. If, in Contractor's opinion, Owner's assistance is needed to locate the utility service or facility or the presence of a representative of Owner is desirable to observe the work, such advice should be included in the notification. Such notification shall be given by the most expeditious means to reach the utility owner's "Person to Contact" no later than two normal business days prior to Contractor's commencement of operations in such general vicinity. Contractor shall furnish a written summary of the notification to the RPR.

Contractor's failure to give the two days' notice shall be cause for Owner to suspend Contractor's operations in the general vicinity of a utility service or facility.

Where the outside limits of an underground utility service have been located and staked on the ground, Contractor shall be required to use hand excavation methods within 3 feet of such outside limits at such points as may be required to ensure protection from damage due to Contractor's operations.

Should Contractor damage or interrupt the operation of a utility service or facility by accident or otherwise, Contractor shall immediately notify the proper authority and the RPR and shall take all reasonable measures to prevent further damage or interruption of service. Contractor, in such events, shall cooperate with the utility service or facility owner and the RPR continuously until such damage has been repaired and service restored to the satisfaction of the utility or facility Owner.

Contractor shall bear all costs of damage and restoration of service to any utility service or facility due to their operations whether due to negligence or accident. Owner reserves the right to deduct such costs from any monies due or which may become due Contractor, or their own surety.

70-16 Furnishing rights-of-way. Owner will be responsible for furnishing all rights-of-way upon which the Work is to be constructed in advance of Contractor's operations.

70-17 Personal liability of public officials. In carrying out any of the Contract Provisions or in exercising any power or authority granted by this Contract, there shall be no liability upon Engineer, RPR, their authorized representatives, or any officials of Owner either personally or as an official of Owner. It is understood that in such matters they act solely as agents and representatives of Owner.

70-18 No waiver of legal rights. Upon completion of the Work, Owner will expeditiously make Final Inspection and notify Contractor of Final Acceptance. Such Final Acceptance, however, shall not preclude or stop Owner from correcting any measurement, estimate, or certificate made before or after completion of the Work, nor shall Owner be precluded or stopped from recovering from Contractor or their surety, or both, such overpayment as may be sustained, or by failure on the part of Contractor to fulfill their obligations under the Contract. A waiver on the part of Owner of any breach of any part of the Contract shall not be held to be a waiver of any other or subsequent breach.

Contractor, without prejudice to the terms of the contract, shall be liable to Owner for latent defects, fraud, or such gross mistakes as may amount to fraud, or as regards Owner's rights under any warranty or guaranty.

70-19 Environmental protection. Contractor shall comply with all federal, state, and local laws and regulations controlling pollution of the environment. Contractor shall take necessary precautions to prevent pollution of streams, lakes, ponds, and reservoirs with fuels, oils, asphalts, chemicals, or other harmful materials and to prevent pollution of the atmosphere from particulate and gaseous matter.

70-20 Archaeological and historical findings. Unless otherwise specified in this subsection, Contractor is advised that the site of the work is not within any property, district, or site, and does not contain any building, structure, or object listed in the current National Register of Historic Places published by the United States Department of Interior.

Should Contractor encounter, during their operations, any building, part of a building, structure, or object that is incongruous with its surroundings, Contractor shall immediately cease operations in that location and notify the RPR. The RPR will immediately investigate Contractor's finding and Owner will direct Contractor to either resume operations or to suspend operations as directed.

Should Owner order suspension of Contractor's operations in order to protect an archaeological or historical finding, or order Contractor to perform extra work, such shall be covered by an appropriate contract change order or supplemental agreement as provided in Section 40, Paragraph 40-04, *Extra Work,* and Section 90, Paragraph 90-05, *Payment for Extra Work*. If appropriate, the Contract Change Order or Supplemental Agreement shall include an extension of Contract time in accordance with Section 80, Paragraph 80-07, *Determination and Extension of Contract Time*.

70-21 Insurance Requirements. See Special Provisions SP-17.

END OF SECTION 70

Section 80 Execution and Progress

80-01 Subletting of contract. Owner will not recognize any subcontractor on the Work. Contractor shall at all times when Work is in progress be represented either in person, by a qualified superintendent, or by other designated, qualified representative who is duly authorized to receive and execute orders of the Resident Project Representative (RPR).

Contractor shall perform, with his organization, an amount of work equal to at least **25** percent of the total Contract cost.

Should Contractor elect to assign their Contract, said assignment shall be concurred in by the surety, shall be presented for the consideration and approval of Owner, and shall be consummated only on the written approval of Owner.

Contractor shall provide copies of all subcontracts to the RPR 14 days prior to being utilized on the Project. As a minimum, the information shall include the following:

- Subcontractor's legal company name.
- Subcontractor's legal company address, including County name.
- Principal contact person's name, telephone, and fax number.
- Complete narrative description, and dollar value of the Work to be performed by the subcontractor.
- Copies of required insurance certificates in accordance with the specifications.
- Minority/ non-minority status.

80-02 Notice to proceed (NTP). Owners notice to proceed will state the date on which contract time commences. Contractor is expected to commence project operations within **10** days of the NTP date. Contractor shall notify the RPR at least 24 hours in advance of the time contract operations begins. Contractor shall not commence any actual operations prior to the date on which the notice to proceed is issued by Owner.

80-03 Execution and progress. Unless otherwise specified, Contractor shall submit their coordinated construction schedule showing all work activities for the RPR’s review and acceptance at least 10 days prior to the start of Work. Contractor’s progress schedule, once accepted by the RPR, will represent Contractor's baseline plan to accomplish the Project in accordance with the terms and conditions of the Contract. The RPR will compare actual Contractor progress against the baseline schedule to determine that status of Contractor's performance. Contractor shall provide sufficient materials, equipment, and labor to guarantee the completion of the Project in accordance with the Plans and Specifications within the time set forth in the Proposal.

If Contractor falls significantly behind the submitted schedule, Contractor shall, upon the RPR’s request, submit a revised schedule for completion of the Work within the contract time and modify their operations to provide such additional materials, equipment, and labor necessary to meet the revised schedule. Should the execution of the Work be discontinued for any reason, Contractor shall notify the RPR at least 24 hours in advance of resuming operations.

Contractor shall not commence any actual construction prior to the date on which the NTP is issued by Owner.

Contractor shall maintain the work schedule and provide an update and analysis of the progress schedule on a twice-monthly basis, or as otherwise specified in the Contract. Submission of the work schedule shall not relieve Contractor of overall responsibility for scheduling, sequencing, and coordinating all Work to comply with the requirements of the Contract.

80-04 Limitation of operations. Contractor shall control their operations and the operations of their subcontractors and all suppliers to provide for the free and unobstructed movement of aircraft in the air operations areas (AOA) of the airport.

When the Work requires Contractor to conduct their operations within an AOA of the airport, the Work shall be coordinated with airport operations (through the RPR) at least 48 hours prior to commencement of such Work. Contractor shall not close an AOA until so authorized by the RPR and until the necessary temporary marking, signage and associated lighting is in place as provided in Section 70, Paragraph 70-08, *Construction Safety and Phasing Plan (CSPP)*.

When the Contract Work requires Contractor to work within an AOA of the airport on an intermittent basis (intermittent opening and closing of the AOA), Contractor shall maintain constant communications as specified; immediately obey all instructions to vacate the AOA; and immediately obey all instructions to resume Work in such AOA. Failure to maintain the specified communications or to obey instructions shall be cause for suspension of Contractor's operations in the AOA until satisfactory conditions are provided. The areas of the AOA identified in the Construction Safety Phasing Plan (CSPP) and as listed below, cannot be closed to operating aircraft to permit Contractor's operations on a continuous basis and will therefore be closed to aircraft operations intermittently as follows: None.

Contractor shall be required to conform to safety standards contained in AC 150/5370-2, Operational Safety on Airports During Construction and the approved CSPP.

80-04.1 Operational safety on airport during construction. All Contractors' operations shall be conducted in accordance with the approved project Construction Safety and Phasing Plan (CSPP) and the Safety Plan Compliance Document (SPCD) and the provisions set forth within the current version of AC 150/5370-2, Operational Safety on Airports During Construction. The CSPP included within the contract documents conveys minimum requirements for operational safety on the airport during construction activities. Contractor shall prepare and submit a SPCD that details how it proposes to comply with the requirements presented within the CSPP.

Contractor shall implement all necessary safety plan measures prior to commencement of any Work activity. Contractor shall conduct routine checks to assure compliance with the safety plan measures.

Contractor is responsible to Owner for the conduct of all subcontractors it employs on the Project. Contractor shall assure that all subcontractors are made aware of the requirements of the CSPP and SPCD and that they implement and maintain all necessary measures.

No deviation or modifications may be made to the approved CSPP and SPCD unless approved in writing by Owner. The necessary coordination actions to review Contractor proposed modifications to an approved CSPP or approved SPCD can require a significant amount of time.

80-05 Character of workers, methods, and equipment. Contractor shall, at all times, employ sufficient labor and equipment for prosecuting the work to full completion in the manner and time required by the Contract, Plans, and Specifications.

All workers shall have sufficient skill and experience to perform properly the work assigned to them. Workers engaged in special work or skilled work shall have sufficient experience in such work and in the operation of the equipment required to perform the work satisfactorily.

Any person employed by Contractor or by any subcontractor who violates any operational regulations or operational safety requirements and, in the opinion of the RPR, does not perform his work in a proper and skillful manner or is intemperate or disorderly shall, at the written request of the RPR, be removed immediately by Contractor or subcontractor employing such person, and shall not be employed again in any portion of the work without approval of the RPR.

Should Contractor fail to remove such person or persons, or fail to furnish suitable and sufficient personnel for the proper execution of the work, the RPR may suspend the work by written notice until compliance with such orders.

All equipment that is proposed to be used on the Work shall be of sufficient size and in such mechanical condition as to meet requirements of the work and to produce a satisfactory quality of Work. Equipment used on any portion of the work shall not cause injury to previously completed work, adjacent property, or existing airport facilities due to its use.

When the methods and equipment to be used by Contractor in accomplishing the work are not prescribed in the contract, Contractor is free to use any methods or equipment that will accomplish the Work in conformity with the requirements of the Contract, Plans, and Specifications.

When the Contract specifies the use of certain methods and equipment, such methods and equipment shall be used unless otherwise authorized by the RPR. If Contractor desires to use a method or type of equipment other than specified in the Contract, Contractor may request authority from the RPR to do so. The request shall be in writing and shall include a full description of the methods and equipment proposed and of the reasons for desiring to make the change. If approval is given, it will be on the condition that Contractor will be fully responsible for producing work in conformity with Contract requirements. If, after trial use of the substituted methods or equipment, the RPR determines that the work produced does not meet Contract requirements, Contractor shall discontinue the use of the substitute method or equipment and shall complete the remaining Work with the specified methods and equipment. Contractor shall remove any deficient Work and replace it with Work of specified quality, or take such other corrective action as the RPR may direct. No change will be made in basis of payment for the contract items involved nor in contract time as a result of authorizing a change in methods or equipment under this paragraph.

80-06 Temporary suspension of the work. Owner shall have the authority to suspend the Work wholly, or in part, for such period or periods Owner may deem necessary, due to unsuitable weather, or other conditions considered unfavorable for the execution of the Work, or for such time necessary due to the failure on the part of Contractor to carry out orders given or perform any or all provisions of the Contract.

In the event that Contractor is ordered by Owner, in writing, to suspend Work for some unforeseen cause not otherwise provided for in the Contract and over which Contractor has no control, Contractor may be reimbursed for actual money expended on the Work during the period of shutdown. No allowance will be made for anticipated profits. The period of shutdown shall be computed from the effective date of the written order to suspend work to the effective date of the written order to resume the Work. Claims for such compensation shall be filed with the RPR within the time period stated in the RPR's order to resume Work. Contractor shall submit with their own claim information substantiating the amount shown on the claim. The RPR will forward Contractor's claim to Owner for consideration in accordance with local laws or ordinances. No provision of this article shall be construed as entitling Contractor to compensation for delays due to inclement weather or for any other delay provided for in the Contract, Plans, or Specifications.

If it becomes necessary to suspend work for an indefinite period, Contractor shall store all materials in such manner that they will not become an obstruction nor become damaged in any way. Contractor shall take every precaution to prevent damage or deterioration of the work performed and provide for normal drainage of the work. Contractor shall erect temporary structures where necessary to provide for traffic on, to, or from the airport.

80-07 Determination and extension of contract time. The number of calendar days shall be stated in the proposal and contract and shall be known as the Contract Time.

If the contract time requires extension for reasons beyond Contractor's control, it shall be adjusted as follows:

80-07.1

Contract time based on calendar days. Contract Time based on calendar days shall consist of the number of calendar days stated in the contract counting from the effective date of the Notice to Proceed and including all Saturdays, Sundays, holidays, and non-workdays. All calendar days elapsing between the effective dates of Owner's orders to suspend and resume all work, due to causes not the fault of Contractor, shall be excluded.

At the time of final payment, the contract time shall be increased in the same proportion as the cost of the actually completed quantities bears to the cost of the originally estimated quantities in the proposal. Such increase in the contract time shall not consider either cost of work or the extension of contract time that has been covered by a change order or supplemental agreement. Charges against the contract time will cease as of the date of final acceptance.

80-08 Failure to complete on time. For each calendar day or working day, as specified in the Contract, that any Work remains uncompleted after the Contract Time (including all extensions and adjustments as provided in paragraph 80-07, *Determination and Extension of Contract Time*) the sum specified in the Contract and Proposal as liquidated damages (LD) will be deducted from any money due or to become due Contractor or their own surety. Such deducted sums shall not be deducted as a penalty but shall be considered as liquidation of a reasonable portion of damages including but not limited to additional engineering services that will be incurred by Owner should Contractor fail to complete the Work in the time provided in their Contract.

Schedule	Liquidated Damages Cost	Allowed Construction Time
Base Bid	$1,000	270

80-09 Default and termination of contract**. Contractor shall be considered in default of their contract and such default will be considered as cause for Owner to terminate the contract for any of the following reasons, if Contractor:**

a. Fails to begin the Work under the Contract within the time specified in the Notice to Proceed, or

b. Fails to perform the Work or fails to provide sufficient workers, equipment and/or materials to assure completion of Work in accordance with the terms of the Contract, or

c. Performs the Work unsuitably or neglects or refuses to remove materials or to perform anew such work as may be rejected as unacceptable and unsuitable, or

d. Discontinues the execution of the Work, or

e. Fails to resume Work which has been discontinued within a reasonable time after notice to do so, or

f. Becomes insolvent or is declared bankrupt, or commits any act of bankruptcy or insolvency, or

g. Allows any final judgment to stand against Contractor unsatisfied for a period of 10 days, or

h. Makes an assignment for the benefit of creditors, or

i. For any other cause whatsoever, fails to carry on the Work in an acceptable manner.

Should Owner consider Contractor in default of the Contract for any reason above, Owner shall immediately give written notice to Contractor and Contractor's surety as to the reasons for considering Contractor in default and Owner's intentions to terminate the Contract.

If Contractor or surety, within a period of 10 days after such notice, does not proceed in accordance therewith, then Owner will, upon written notification from the RPR of the facts of such delay, neglect, or default and Contractor's failure to comply with such notice, have full power and authority without violating the contract, to take the execution of the work out of the hands of Contractor. Owner may appropriate or use any or all materials and equipment that have been mobilized for use in the work and are acceptable and may enter into an agreement for the completion of said contract according to the terms and provisions thereof or use such other methods as in the opinion of the RPR will be required for the completion of said contract in an acceptable manner.

All costs and charges incurred by Owner, together with the cost of completing the Work under Contract, will be deducted from any monies due or which may become due Contractor. If such expense exceeds the sum which would have been payable under the Contract, then Contractor and the surety shall be liable and shall pay to Owner the amount of such excess.

80-10 Termination for national emergencies. Owner shall terminate the Contract or portion thereof by written notice when Contractor is prevented from proceeding with the construction contract as a direct result of an Executive Order of the President with respect to the execution of war or in the interest of national defense.

When the Contract, or any portion thereof, is terminated before completion of all items of Work in the Contract, payment will be made for the actual number of units or items of Work completed at the Contract price or as mutually agreed for items of Work partially completed or not started. No claims or loss of anticipated profits shall be considered.

Reimbursement for organization of the Work, and other overhead expenses, (when not otherwise included in the Contract) and moving equipment and materials to and from the job will be considered, the intent being that an equitable settlement will be made with Contractor.

Acceptable materials, obtained or ordered by Contractor for the Work and that are not incorporated in the Work shall, at the option of Contractor, be purchased from Contractor at actual cost as shown by receipted bills and actual cost records at such points of delivery as may be designated by the RPR.

Termination of the Contract or a portion thereof shall neither relieve Contractor of their responsibilities for the completed Work nor shall it relieve their surety of its obligation for and concerning any just claim arising out of the Work performed.

80-11 Work area, storage area and sequence of operations. Contractor shall obtain approval from the RPR prior to beginning any Work in all areas of the airport. No operating runway, taxiway, or air operations area (AOA) shall be crossed, entered, or obstructed while it is operational. Contractor shall plan and coordinate Work in accordance with the approved CSPP and SPCD.

END OF SECTION 80

Section 90 Measurement and Payment

90-01 Measurement of quantities. All Work completed under the Contract will be measured by the RPR, or their authorized representatives, using United States Customary Units of Measurement.

The method of measurement and computations to be used in determination of quantities of material furnished and of Work performed under the Contract will be those methods generally recognized as conforming to good engineering practice.

Unless otherwise specified, longitudinal measurements for area computations will be made horizontally, and no deductions will be made for individual fixtures (or leave-outs) having an area of 9 square feet or less. Unless otherwise specified, transverse measurements for area computations will be the neat dimensions shown on the Plans or ordered in writing by the RPR.

Unless otherwise specified, all contract items which are measured by the linear foot such as electrical ducts, conduits, pipe culverts, underdrains, and similar items shall be measured parallel to the base or foundation upon which such items are placed.

The term "lump sum" when used as an item of payment will mean complete payment for the Work described in the Contract. When a complete structure or structural unit (in effect, "lump sum" work) is specified as the unit of measurement, the unit will be construed to include all necessary fittings and accessories.

When requested by Contractor and approved by the RPR in writing, material specified to be measured by the cubic yard may be weighed, and such weights will be converted to cubic yards for payment purposes. Factors for conversion from weight measurement to volume measurement will be determined by the RPR and shall be agreed to by Contractor before such method of measurement of pay quantities is used.

Measurement and Payment Terms

Term	Description
Excavation and Embankment Volume	In computing volumes of excavation, the average end area method will be used unless otherwise specified.
Measurement and Proportion by Weight	The term "ton" will mean the short ton consisting of 2,000 pounds avoirdupois. All materials that are measured or proportioned by weights shall be weighed on accurate, independently certified scales by competent, qualified personnel at locations designated by the RPR. If material is shipped by rail, the car weight may be accepted provided that only the actual weight of material is paid for. However, car weights will not be acceptable for material to be passed through mixing plants. Trucks used to haul material being paid for by weight shall be weighed empty daily at such times as the RPR directs, and each truck shall bear a plainly legible identification mark.
Measurement by Volume	Materials to be measured by volume in the hauling vehicle shall be hauled in approved vehicles and measured therein at the point of delivery. Vehicles for this purpose may be of any size or type acceptable for the materials hauled, provided that the body is of such shape that the actual contents may be readily and accurately determined. All vehicles shall be loaded to at least their water level capacity, and all loads shall be leveled when the vehicles arrive at the point of delivery.

Term	Description
Asphalt Material	Asphalt materials will be measured by the gallon or ton. When measured by volume, such volumes will be measured at 60°F or will be corrected to the volume at 60°F using ASTM D1250 for asphalts. Net certified scale weights or weights based on certified volumes in the case of rail shipments will be used as a basis of measurement, subject to correction when asphalt material has been lost from the car or the distributor, wasted, or otherwise not incorporated in the work. When asphalt materials are shipped by truck or transport, net certified weights by volume, subject to correction for loss or foaming, will be used for computing quantities.
Cement	Cement will be measured by the ton or hundredweight.
Structure	Structures will be measured according to neat lines shown on the plans or as altered to fit field conditions.
Timber	Timber will be measured by the thousand feet board measure (MFBM) actually incorporated in the structure. Measurement will be based on nominal widths and thicknesses and the extreme length of each piece.
Plates and Sheets	The thickness of plates and galvanized sheet used in the manufacture of corrugated metal pipe, metal plate pipe culverts and arches, and metal cribbing will be specified and measured in decimal fraction of inch.
Miscellaneous Items	When standard manufactured items are specified such as fence, wire, plates, rolled shapes, pipe conduit, etc., and these items are identified by gauge, unit weight, section dimensions, etc., such identification will be considered to be nominal weights or dimensions. Unless more stringently controlled by tolerances in cited specifications, manufacturing tolerances established by the industries involved will be accepted.
Scales	Scales must be tested for accuracy and serviced before use. Scales for weighing materials which are required to be proportioned or measured and paid for by weight shall be furnished, erected, and maintained by Contractor, or be certified permanently installed commercial scales. Platform scales shall be installed and maintained with the platform level and rigid bulkheads at each end. Scales shall be accurate within 0.5% of the correct weight throughout the range of use. Contractor shall have the scales checked under the observation of the RPR before beginning work and at such other times as requested. The intervals shall be uniform in spacing throughout the graduated or marked length of the beam or dial and shall not exceed 0.1% of the nominal rated capacity of the scale, but not less than 1 pound. The use of spring balances will not be permitted. In the event inspection reveals the scales have been "overweighing" (indicating more than correct weight) they will be immediately adjusted. All materials received subsequent to the last previous correct weighting-accuracy test will be reduced by the percentage of error in excess of 0.5%. In the event inspection reveals the scales have been under-weighing (indicating less than correct weight), they shall be immediately adjusted. No additional payment to Contractor will be allowed for materials previously weighed and recorded. Beams, dials, platforms, and other scale equipment shall be so arranged that the operator and the RPR can safely and conveniently view them. Scale installations shall have available ten standard 50-pound weights for testing the weighing equipment or suitable weights and devices for other approved equipment.

Term	Description
	All costs in connection with furnishing, installing, certifying, testing, and maintaining scales; for furnishing check weights and scale house; and for all other items specified in this subsection, for the weighing of materials for proportioning or payment, shall be included in the unit contract prices for the various items of the Project.
Rental Equipment	Rental of equipment will be measured by time in hours of actual working time and necessary traveling time of the equipment within the limits of the Work. Special equipment ordered in connection with extra work will be measured as agreed in the change order or supplemental agreement authorizing such work as provided in Paragraph 90-05 *Payment for Extra Work.*
Pay Quantities	When the estimated quantities for a specific portion of the work are designated as the pay quantities in the Contract, they shall be the final quantities for which payment for such specific portion of the Work will be made, unless the dimensions of said portions of the Work shown on the Plans are revised by the RPR. If revised dimensions result in an increase or decrease in the quantities of such work, the final quantities for payment will be revised in the amount represented by the authorized changes in the dimensions.

90-02 Scope of payment. Contractor shall receive and accept compensation provided for in the Contract as full payment for furnishing all materials, for performing all Work under the Contract in a complete and acceptable manner, and for all risk, loss, damage, or expense of whatever character arising out of the nature of the Work or the execution thereof, subject to the provisions of Section 70, Paragraph 70-18, *No Waiver of Legal Rights*.

When the "basis of payment" subsection of a Technical Specification requires that the contract price (price bid) include compensation for certain work or material essential to the item, this same work or material will not also be measured for payment under any other contract item which may appear elsewhere in the Contract, Plans, or Specifications.

90-03 Compensation for altered quantities. When the accepted quantities of Work vary from the quantities in the Proposal, Contractor shall accept as payment in full, so far as contract items are concerned, payment at the original contract price for the accepted quantities of work actually completed and accepted. No allowance, except as provided for in Section 40, Paragraph 40-02, *Alteration of Work and Quantities,* will be made for any increased expense, loss of expected reimbursement, or loss of anticipated profits suffered or claimed by Contractor which results directly from such alterations or indirectly from their own unbalanced allocation of overhead and profit among the contract items, or from any other cause.

90-04 Payment for omitted items. As specified in Section 40, Paragraph 40-03, *Omitted Items,* the RPR shall have the right to omit from the work (order nonperformance) any contract item, except major contract items, in the best interest of Owner.

Should the RPR omit or order nonperformance of a contract item or portion of such item from the Work, Contractor shall accept payment in full at the contract prices for any Work actually completed and acceptable prior to the RPR's order to omit or non-perform such contract item.

Acceptable materials ordered by Contractor or delivered on the Work prior to the date of the RPR's order will be paid for at the actual cost to Contractor and shall thereupon become the property of Owner.

In addition to the reimbursement hereinbefore provided, Contractor shall be reimbursed for all actual costs incurred for the purpose of performing the omitted contract item prior to the date of the RPR's order. Such additional costs incurred by Contractor must be directly related to the deleted contract item and shall be supported by certified statements by Contractor as to the nature the amount of such costs.

90-05 Payment for extra work. Extra work, performed in accordance with Section 40, Paragraph 40-04, *Extra Work*, will be paid for at the contract prices or agreed prices specified in the change order or supplemental agreement authorizing the extra work.

90-06 Partial payments. Partial payments will be made to Contractor at least once each month as the Work progresses. Said payments will be based upon estimates, prepared by the RPR, of the value of the Work performed and materials complete and in place, in accordance with the Contract, Plans, and Specifications. Such partial payments may also include the delivered actual cost of those materials stockpiled and stored in accordance with Paragraph 90-07, *Payment for Materials on Hand*. No partial payment will be made when the amount due to Contractor since the last estimate amounts to less than $500.

Owner may hold retainage from prime Contractors and provide for prompt and regular incremental acceptances of portions of the prime contract, pay retainage to prime Contractors based on these acceptances, and require a contract clause obligating the prime Contractor to pay all retainage owed to the subcontractor for satisfactory completion of the accepted work within 30 days after Owner's payment to the prime Contractor. If Option 3 is selected, the percent withheld may range from 0 percent to 10 percent but in no case may it exceed 10 percent. When establishing a suitable retainage value that protects Owner's interests, give consideration that the performance and payment bonds also provide similar protection of Owner interests. Owner may elect to incrementally release retainage if owner is satisfied its interest with completion of the project are protected in an adequate manner. If Option 3 is selected, insert the following clause, and specify a suitable value where indicated:

a. From the total of the amount determined to be payable on a partial payment, 5 percent of such total amount will be deducted and retained by Owner for protection of Owner's interests. Unless otherwise instructed by Owner, the amount retained by Owner will be in effect until the final payment is made except as follows:

(1) Contractor may request release of retainage on work that has been partially accepted by Owner in accordance with Section 50-03. Contractor must provide a certified invoice to the RPR that supports the value of retainage held by Owner for partially accepted Work.

(2) In lieu of retainage, Contractor may exercise at its option the establishment of an escrow account per Paragraph 90-08.

b. Contractor is required to pay all subcontractors for satisfactory performance of their contracts no later than 30 days after Contractor has received a partial payment. Contractor must provide Owner evidence of prompt and full payment of retainage held by the prime Contractor to the subcontractor within 30 days after the subcontractor's work is satisfactorily completed. A subcontractor's work is satisfactorily completed when all the tasks called for in the subcontract have been accomplished and documented as required by Owner. When Owner has made an incremental acceptance of a portion of a prime contract, the work of a subcontractor covered by that acceptance is deemed to be satisfactorily completed.

c. When at least 95 percent of the Work has been completed to the satisfaction of the RPR, the RPR shall, at Owner's discretion and with the consent of the surety, prepare estimates of both the contract value and the cost of the remaining Work to be done. Owner may retain an amount not less than twice the contract value or estimated cost, whichever is greater, of the work remaining to be done. The remainder, less all previous payments and deductions, will then be certified for payment to Contractor.

It is understood and agreed that Contractor shall not be entitled to demand or receive partial payment based on quantities of Work in excess of those provided in the Proposal or covered by approved change orders or supplemental agreements, except when such excess quantities have been determined by the RPR to be a part of the final quantity for the item of work in question.

No partial payment shall bind Owner to the acceptance of any materials or work in place as to quality or quantity. All partial payments are subject to correction at the time of final payment as provided in Paragraph 90-09, *Acceptance and Final Payment*.

Contractor shall deliver to Owner a complete release of all claims for labor and material arising out of this contract before the Final Payment is made. If any subcontractor or supplier fails to furnish such a release in full, Contractor may furnish a bond or other collateral satisfactory to Owner to indemnify Owner against any potential lien or other such claim. The bond or collateral shall include all costs, expenses, and attorney fees Owner may be compelled to pay in discharging any such lien or claim.

90-07 Payment for materials on hand. Partial payments may be made to the extent of the delivered cost of materials to be incorporated in the Work, provided that such materials meet the requirements of the Contract, Plans, and Specifications and are delivered to acceptable sites on the airport property or at other sites in the vicinity that are acceptable to Owner. Such delivered costs of stored or stockpiled materials may be included in the next partial payment after the following conditions are met:

a. The material has been stored or stockpiled in a manner acceptable to the RPR at or on an approved site.

b. Contractor has furnished the RPR with acceptable evidence of the quantity and quality of such stored or stockpiled materials.

c. Contractor has furnished the RPR with satisfactory evidence that the material and transportation costs have been paid.

d. Contractor has furnished Owner legal title (free of liens or encumbrances of any kind) to the material stored or stockpiled.

e. Contractor has furnished Owner evidence that the material stored or stockpiled is insured against loss by damage to or disappearance of such materials at any time prior to use in the work.

It is understood and agreed that the transfer of title and Owner's payment for such stored or stockpiled materials shall in no way relieve Contractor of their responsibility for furnishing and placing such materials in accordance with the requirements of the contract, plans, and specifications.

In no case will the amount of partial payments for materials on hand exceed the contract price for such materials or the contract price for the contract item in which the material is intended to be used.

No partial payment will be made for stored or stockpiled living or perishable plant materials.

Contractor shall bear all costs associated with the partial payment of stored or stockpiled materials in accordance with the provisions of this paragraph.

90-08 Payment of withheld funds. At Contractor's option, if an Owner withholds retainage in accordance with the methods described in Paragraph 90-06 *Partial Payments*, Contractor may request that Owner deposit the retainage into an escrow account. Owner's deposit of retainage into an escrow account is subject to the following conditions:

a. Contractor shall bear all expenses of establishing and maintaining an escrow account and escrow agreement acceptable to Owner.

b. Contractor shall deposit to and maintain in such escrow only those securities or bank certificates of deposit as are acceptable to Owner and having a value not less than the retainage that would otherwise be withheld from partial payment.

c. Contractor shall enter into an escrow agreement satisfactory to Owner.

d. Contractor shall obtain the written consent of the surety to such agreement.

90-09 Acceptance and final payment. When the Contract Work has been accepted in accordance with the requirements of Section 50, Paragraph 50-15, *Final Acceptance*, the RPR will prepare the final estimate of the items of work actually performed. Contractor shall approve the RPR's final estimate or advise the RPR of Contractor's objections to the final estimate which are based on disputes in measurements or computations of the final quantities to be paid under the contract as amended by change order or supplemental agreement. Contractor and the RPR shall resolve all disputes (if any) in the measurement and computation of final quantities to be paid within 30 calendar days of Contractor's receipt of the RPR's final estimate. If, after such 30-day period, a dispute still exists, Contractor may approve the RPR's estimate under protest of the quantities in dispute, and such disputed quantities shall be considered by Owner as a claim in accordance with Section 50, Paragraph 50-16, *Claims for Adjustment and Disputes*.

After Contractor has approved, or approved under protest, the RPR's final estimate, and after the RPR's receipt of the project closeout documentation required in Paragraph 90-11, *Contractor Final Project Documentation*, Final Payment will be processed based on the entire sum, or the undisputed sum in case of approval under protest, determined to be due Contractor less all previous payments and all amounts to be deducted under the provisions of the contract. All prior partial estimates and payments shall be subject to correction in the final estimate and payment.

If Contractor has filed a claim for additional compensation under the provisions of Section 50, Paragraph 50-16, *Claims for Adjustments and Disputes,* or under the provisions of this paragraph, such claims will be considered by Owner in accordance with local laws or ordinances. Upon final adjudication of such claims, any additional payment determined to be due Contractor will be paid pursuant to a supplemental final estimate.

90-10 Construction warranty.

a. In addition to any other warranties in this Contract, Contractor warrants that Work performed under this Contract conforms to the Contract requirements and is free of any defect in equipment, material, workmanship, or design furnished, or performed by Contractor or any subcontractor or supplier at any tier.

b. This warranty shall continue for a period of one year from the date of final acceptance of the Work, except as noted. If Owner takes possession of any part of the Work before Final Acceptance, this warranty shall continue for a period of one year from the date Owner takes possession.

c. Contractor shall remedy at Contractor's expense any failure to conform, or any defect. In addition, Contractor shall remedy at Contractor's expense any damage to Owner real or personal property, when that damage is the result of Contractor's failure to conform to contract requirements; or any defect of equipment, material, workmanship, or design furnished by Contractor.

d. Contractor shall restore any Work damaged in fulfilling the terms and conditions of this clause. Contractor's warranty with respect to work repaired or replaced will run for one year from the date of repair or replacement.

e. Owner will notify Contractor, in writing, within seven days after the discovery of any failure, defect, or damage.

f. If Contractor fails to remedy any failure, defect, or damage within 14 days after receipt of notice, Owner shall have the right to replace, repair, or otherwise remedy the failure, defect, or damage at Contractor's expense.

g. With respect to all warranties, express or implied, from subcontractors, manufacturers, or suppliers for work performed and materials furnished under this contract, Contractor shall: (1) obtain all warranties that would be given in normal commercial practice; (2) require all warranties to be executed, in writing, for the benefit of Owner, as directed by Owner, and (3) enforce all warranties for the benefit of Owner.

h. This warranty shall not limit Owner's rights with respect to latent defects, gross mistakes, or fraud.

90-11 Contractor Final Project Documentation. Approval of Final Payment to Contractor is contingent upon completion and submittal of the items listed below. The Final Payment will not be approved until the RPR approves Contractor's final submittal. Contractor shall:

a. Provide two copies of all manufacturers warranties specified for materials, equipment, and installations.

b. Provide weekly payroll records (not previously received) from the general Contractor and all subcontractors.

c. Complete final cleanup in accordance with Section 40, Paragraph 40-08, *Final Cleanup*.

d. Complete all punch list items identified during the Final Inspection.

e. Provide complete release of all claims for labor and material arising out of the Contract.

f. Provide a certified statement signed by the subcontractors, indicating actual amounts paid to the Disadvantaged Business Enterprise (DBE) subcontractors and/or suppliers associated with the project.

g. When applicable per state requirements, return copies of sales tax completion forms.

h. Manufacturer's certifications for all items incorporated in the Work.

i. All required Record Drawings, As-built Drawings, or As-constructed Drawings.

j. Project Operation and Maintenance (O&M) Manual(s).

k. Security for Construction Warranty.

l. Equipment commissioning documentation submitted, if required.

END OF SECTION 90

TECHNICAL SPECIFICATIONS

Item C-100 Contractor Quality Control Program (CQCP)

100-1 General. Quality is more than test results. Quality is the combination of proper materials, testing, workmanship, equipment, inspection, and documentation of the Project. Establishing and maintaining a culture of quality is key to achieving a quality project. Contractor shall establish, provide, and maintain an effective Contractor Quality Control Program (CQCP) that details the methods and procedures that will be taken to assure that all materials and completed construction required by this Contract conform to Contract Plans, Technical Specifications, and other requirements, whether manufactured by Contractor, or procured from subcontractors or vendors. Although guidelines are established and certain minimum requirements are specified here and elsewhere in the Contract Technical Specifications, Contractor shall assume full responsibility for accomplishing the stated purpose.

Contractor shall establish a CQCP that will:

a. Provide qualified personnel to develop and implement the CQCP.

b. Provide for the production of acceptable quality materials.

c. Provide sufficient information to assure that the specification requirements can be met.

d. Document the CQCP process.

Contractor shall not begin any construction or production of materials to be incorporated into the completed Work until the CQCP has been reviewed and approved by the Resident Project Representative (RPR). No partial payment will be made for materials subject to specific quality control (QC) requirements until the CQCP has been reviewed and approved.

The QC requirements contained in this Section and elsewhere in the contract Technical Specifications are in addition to and separate from the quality assurance (QA) testing requirements. QA testing requirements are the responsibility of the RPR or Contractor as specified in the Specifications.

A Quality Control (QC)/Quality Assurance (QA) workshop with the Engineer, Resident Project Representative (RPR), Contractor, subcontractors, testing laboratories, and Owner's representative must be held prior to start of construction. The QC/QA workshop will be facilitated by Contractor. Contractor shall coordinate with the Airport and the RPR on time and location of the QC/QA workshop. Items to be addressed, at a minimum, will include:

a. Review of the CQCP including submittals, QC Testing, Action & Suspension Limits for Production, Corrective Action Plans, Distribution of QC reports, and Control Charts.

b. Discussion of the QA program.

c. Discussion of the QC and QA Organization and authority including coordination and information exchange between QC and QA.

d. Establish regular meetings to discuss control of materials, methods and testing.

e. Establishment of the overall QC culture.

100-2 Description of program.

a. General description. Contractor shall establish a CQCP to perform QC inspection and testing of all items of work required by the Technical Specifications, including those performed by subcontractors. The CQCP shall ensure conformance to applicable Specifications and Plans with respect to materials, off-site fabrication, workmanship, construction, finish, and functional performance. The CQCP shall be effective for control of all construction work performed under this Contract and shall specifically include surveillance and tests required by the Technical Specifications, in addition to other requirements of this Section and any other activities deemed necessary by the Contractor to establish an effective level of QC.

b. Contractor Quality Control Program (CQCP). Contractor shall describe the CQCP in a written document that shall be reviewed and approved by the RPR prior to the start of any production, construction, or off-site fabrication. The written CQCP shall be submitted to the RPR for review and approval at least 10 calendar days before the CQCP Workshop. Contractor's CQCP and QC testing laboratory must be approved in writing by the RPR prior to the Notice to Proceed (NTP).

The CQCP shall be organized to address, as a minimum, the following:

1. QC organization and resumes of key staff.
2. Project progress schedule.
3. Submittals schedule.
4. Inspection requirements.
5. QC testing plan.
6. Documentation of QC activities and distribution of QC reports.
7. Requirements for corrective action when QC and/or QA acceptance criteria are not met.
8. Material quality and construction means and methods. Address all elements applicable to the Project that affect the quality of the pavement structure including subgrade, subbase, base, and surface course. Some elements that must be addressed include, but is not limited to mix design, aggregate grading, stockpile management, mixing and transporting, placing, and finishing, quality control testing and inspection, smoothness, laydown plan, equipment, and temperature management plan.

Contractor must add any additional elements to the CQCP that is necessary to adequately control all production and/or construction processes required by this Contract.

100-3 CQCP organization. The CQCP shall be implemented by the establishment of a QC organization. An organizational chart shall be developed to show all QC personnel, their authority, and how these personnel integrate with other management/production and construction functions and personnel.

The organizational chart shall identify all QC staff by name and function and shall indicate the total staff required to implement all elements of the CQCP, including inspection and testing for each item of Work. If necessary, different technicians can be used for specific inspection and testing functions for different items of Work. If an outside organization or independent testing laboratory is used for implementation of all or part of the CQCP, the personnel assigned shall be subject to the qualification requirements of Paragraphs 100-03a and 100-03b. The organizational chart shall indicate which personnel are Contractor employees and which are provided by an outside organization.

The QC organization shall, as a minimum, consist of the following personnel:

a. Program Administrator. The Contractor Quality Control Program Administrator (CQCPA) must be a full-time employee of Contractor, or a consultant engaged by Contractor. The CQCPA must have a minimum of five years of experience in QC pavement construction with prior QC experience on a project of comparable size and scope as the Contract.

Included in the five years of paving/QC experience, the CQCPA must meet at least one of the following requirements:

(1) Professional Engineer with one year of airport paving experience.

(2) Engineer-in-training with two years of airport paving experience.

(3) National Institute for Certification in Engineering Technologies (NICET) Civil Engineering Technology Level IV with three years of airport paving experience.

(4) An individual with four years of airport paving experience, with a Bachelor of Science Degree in Civil Engineering, Civil Engineering Technology or Construction.

The CQCPA must have full authority to institute any and all actions necessary for the successful implementation of the CQCP to ensure compliance with the Contract Plans and Technical Specifications. The CQCPA authority must include the ability to immediately stop production until materials and/or processes are in compliance with Contract Specifications. The CQCPA must report directly to a principal officer of the construction firm. The CQCPA may supervise the Quality Control Program on more than one project provided that person can be at the job site within two hours after being notified of a problem.

b. QC technicians. A sufficient number of QC technicians necessary to adequately implement the CQCP must be provided. These personnel must be either Engineers, engineering technicians, or experienced craftsman with qualifications in the appropriate field equivalent to NICET Level II in Civil Engineering Technology or higher and shall have a minimum of two years of experience in their area of expertise.

The QC technicians must report directly to the CQCPA and shall perform the following functions:

(1) Inspection of all materials, construction, plant, and equipment for conformance to the Technical Specifications, and as required by Paragraph 100-6.

(2) Performance of all QC tests as required by the Technical Specifications and Paragraph100-8.

(3) Performance of tests for the RPR when required by the Technical Specifications.

Certification at an equivalent level of qualification and experience by a state or nationally recognized organization will be acceptable in lieu of NICET certification.

c. Staffing levels. Contractor shall provide sufficient qualified QC personnel to monitor each work activity at all times. Where material is being produced in a plant for incorporation into the Work, separate plant and field technicians shall be provided at each plant and field placement location. The scheduling and coordinating of all inspection and testing must match the type and pace of work activity. The CQCP shall state where different technicians will be required for different work elements.

100-4 Project progress schedule. Critical QC activities must be shown on the project schedule as required by Section 80, Paragraph 80-03, *Execution and Progress*.

100-5 Submittals schedule. Contractor shall submit a detailed listing of all submittals (for example, mix designs, material certifications) and Shop Drawings required by the Technical Specifications. The listing can be developed in a spreadsheet format and shall include as a minimum:

a. Specification item number.

b. Item description.

c. Description of submittal.

d. Specification paragraph requiring submittal.

e. Scheduled date of submittal.

100-6 Inspection requirements. QC inspection functions shall be organized to provide inspections for all definable features of Work, as detailed below. All inspections shall be documented by Contractor as specified by Paragraph 100-9.

Inspections shall be performed as needed to ensure continuing compliance with contract requirements until completion of the particular feature of Work. Inspections shall include the following minimum requirements:

a. During plant operation for material production, QC test results and periodic inspections shall be used to ensure the quality of aggregates and other mix components, and to adjust and control mix proportioning to meet the approved mix design and other requirements of the Technical Specifications. All equipment used in proportioning and mixing shall be inspected to ensure its proper operating condition. The CQCP shall detail how these and other QC functions will be accomplished and used.

b. During field operations, QC test results and periodic inspections shall be used to ensure the quality of all materials and workmanship. All equipment used in placing, finishing, and compacting shall be inspected to ensure its proper operating condition and to ensure that all such operations are in conformance to the Technical Specifications and are within the plan dimensions, lines, grades, and tolerances specified. The CQCP shall document how these and other QC functions will be accomplished and used.

100-7 Contractor QC testing facility.

a. For projects that include Item P-401, Item P-403, and Item P-404, Contractor shall ensure facilities, including all necessary equipment, materials, and current reference standards, are provided that meet requirements in the following paragraphs of ASTM D3666, *Standard Specification for Minimum Requirements for Agencies Testing and Inspecting Road and Paving Materials*:

- 8.1.3 Equipment Calibration and Checks.
- 8.1.9 Equipment Calibration, Standardization, and Check Records.
- 8.1.12 Test Methods and Procedures.

b. For projects that include P-501, Contractor shall ensure facilities, including all necessary equipment, materials, and current reference standards, are provided that meet requirements in the following paragraphs of ASTM C1077, Standard Practice for Agencies Testing Concrete and Concrete Aggregates for Use in Construction and Criteria for Testing Agency Evaluation:

- 7 Test Methods and Procedures.
- 8 Facilities, Equipment, and Supplemental Procedures.

100-8 QC testing plan. As a part of the overall CQCP, Contractor shall implement a QC testing plan, as required by the Technical Specifications. The testing plan shall include the minimum tests and test frequencies required by each Technical Specification Item, as well as any additional QC tests that Contractor deems necessary to adequately control production and/or construction processes.

The QC testing plan can be developed in a spreadsheet fashion and shall, as a minimum, include the following:

a. Specification item number (e.g., P-401).

b. Item description (e.g., Hot Mix Asphalt Pavements).

c. Test type (e.g., gradation, grade, asphalt content).

d. Test standard (e.g., ASTM or American Association of State Highway and Transportation Officials (AASHTO) test number, as applicable).

e. Test frequency (e.g., as required by technical specifications or minimum frequency when requirements are not stated).

f. Responsibility (e.g., plant technician).

g. Control requirements (e.g., target, permissible deviations).

The QC testing plan shall contain a statistically-based procedure of random sampling for acquiring test samples in accordance with ASTM D3665. The RPR shall be provided the opportunity to witness QC sampling and testing.

All QC test results shall be documented by Contractor as required by Paragraph 100-9.

100-9 Documentation. Contractor shall maintain current QC records of all inspections and tests performed. These records shall include factual evidence that the required QC inspections or tests have been performed, including type and number of inspections or tests involved; results of inspections or tests; nature of defects, deviations, causes for rejection, etc.; proposed remedial action; and corrective actions taken.

These records must cover both conforming and defective or deficient features and must include a statement that all supplies and materials incorporated in the Work are in full compliance with the terms of the Contract. Legible copies of these records shall be furnished to the RPR daily. The records shall cover all work placed subsequent to the previously furnished records and shall be verified and signed by the CQCPA.

Contractor QC records required for the contract shall include, but are not necessarily limited to, the following records:

a. Daily inspection reports. Each Contractor QC technician shall maintain a daily log of all inspections performed for both Contractor and subcontractor operations. These technician's daily reports shall provide factual evidence that continuous QC inspections have been performed and shall, as a minimum, include the following:

(1) Technical specification item number and description.

(2) Compliance with approved submittals.

(3) Proper storage of materials and equipment.

(4) Proper operation of all equipment.

(5) Adherence to Plans and Technical Specifications.

(6) Summary of any necessary corrective actions.

(7) Safety inspection.

(8) Photographs and/or video.

The daily inspection reports shall identify all QC inspections and QC tests conducted, results of inspections, location and nature of defects found, causes for rejection, and remedial or corrective actions taken or proposed.

PACKET 14.207 September 24, 2024

The daily inspection reports shall be signed by the responsible QC technician and the CQCPA. The RPR shall be provided at least one copy of each daily inspection report on the work day following the day of record. When QC inspection and test results are recorded and transmitted electronically, the results must be archived.

b. Daily test reports. Contractor shall be responsible for establishing a system that will record all QC test results. Daily test reports shall document the following information:

(1) Technical specification item number and description.
(2) Test designation.
(3) Location.
(4) Date of test.
(5) Control requirements.
(6) Test results.
(7) Causes for rejection.
(8) Recommended remedial actions.
(9) Retests.

Test results from each day's work period shall be submitted to the RPR prior to the start of the next day's work period. When required by the Technical Specifications, Contractor shall maintain statistical QC charts. When QC daily test results are recorded and transmitted electronically, the results must be archived.

100-10 Corrective action requirements. The CQCP shall indicate the appropriate action to be taken when a process is deemed, or believed, to be out of control (out of tolerance) and detail what action will be taken to bring the process into control. The requirements for corrective action shall include both general requirements for operation of the CQCP as a whole, and for individual items of work contained in the technical specifications.

The CQCP shall detail how the results of QC inspections and tests will be used for determining the need for corrective action and shall contain clear rules to gauge when a process is out of control and the type of correction to be taken to regain process control.

When applicable or required by the Technical Specifications, Contractor shall establish and use statistical QC charts for individual QC tests. The requirements for corrective action shall be linked to the control charts.

100-11 Inspection and/or observations by the RPR. All items of material and equipment are subject to inspection and/or observation by the RPR at the point of production, manufacture or shipment to determine if Contractor, producer, manufacturer or shipper maintains an adequate QC system in conformance with the requirements detailed here and the applicable technical specifications and plans. In addition, all items of materials, equipment and work in place shall be subject to inspection and/or observation by the RPR at the site for the same purpose.

Inspection and/or observations by the RPR does not relieve Contractor of performing QC inspections of either on-site or off-site Contractor's or subcontractor's work.

100-12 Noncompliance.

a. The Resident Project Representative (RPR) will provide written notice to Contractor of any noncompliance with their CQCP. After receipt of such notice, Contractor must take corrective action.

b. When QC activities do not comply with either the CQCP or the Contract Provisions or when Contractor fails to properly operate and maintain an effective CQCP, and no effective corrective actions have been taken after notification of non-compliance, the RPR will recommend Owner take the following actions:

(1) Order Contractor to replace ineffective or unqualified QC personnel or subcontractors and/or

(2) Order Contractor to stop operations until appropriate corrective actions are taken.

METHOD OF MEASUREMENT

100-13 Basis of measurement and payment. Contractor Quality Control Program (CQCP) is for the personnel, tests, facilities, and documentation required to implement the CQCP. The CQCP will be paid as a lump sum with the following schedule of partial payments:

a. With first pay request, 25 percent with approval of CQCP and completion of the Quality Control (QC)/Quality Assurance (QA) workshop.

b. When 25 percent or more of the original contract is earned, an additional 25 percent.

c. When 50 percent or more of the original contract is earned, an additional 20 percent.

d. When 75 percent or more of the original contract is earned, an additional 20 percent.

e. After final inspection and acceptance of project, the final 10 percent.

BASIS OF PAYMENT

100-14 Payment will be made under:

Item C-100	Contractor Quality Control Program (CQCP), complete, per lump sum.

REFERENCES

The publications listed below form a part of this Specification to the extent referenced. The publications are referred to within the text by the basic designation only.

National Institute for Certification in Engineering Technologies (NICET)

ASTM International (ASTM)

ASTM C1077	Standard Practice for Agencies Testing Concrete and Concrete Aggregates for Use in Construction and Criteria for Testing Agency Evaluation
ASTM D3665	Standard Practice for Random Sampling of Construction Materials
ASTM D3666	Standard Specification for Minimum Requirements for Agencies Testing and Inspecting Road and Paving Materials

END OF ITEM C-100

PACKET 14.209 September 24, 2024

Item C-102 Temporary Air and Water Pollution, Soil Erosion, and Siltation Control

DESCRIPTION

102-1. This item shall consist of temporary control measures as shown on the plans or as ordered by the Resident Project Representative (RPR) during the life of a contract to control pollution of air and water, soil erosion, and siltation through the use of silt fences, berms, dikes, dams, sediment basins, fiber mats, gravel, mulches, grasses, slope drains, and other erosion control devices or methods.

Temporary erosion control shall be in accordance with the approved erosion control plan; the approved Construction Safety and Phasing Plan (CSPP) and AC 150/5370-2, *Operational Safety on Airports During Construction*. The temporary erosion control measures contained herein shall be coordinated with the permanent erosion control measures specified as part of this contract to the extent practical to assure economical, effective, and continuous erosion control throughout the construction period.

Temporary control may include work outside the construction limits such as borrow pit operations, equipment and material storage sites, waste areas, and temporary plant sites.

Temporary control measures shall be designed, installed and maintained to minimize the creation of wildlife attractants that have the potential to attract hazardous wildlife on or near public-use airports.

MATERIALS

102-2.1 Grass. Grass that will not compete with the grasses sown later for permanent cover per Item T-901shall be a quick-growing species (such as ryegrass, Italian ryegrass, or cereal grasses) suitable to the area providing a temporary cover. Selected grass species shall not create a wildlife attractant.

102-2.2 Mulches. Mulches may be hay, straw, fiber mats, netting, bark, wood chips, or other suitable material reasonably clean and free of noxious weeds and deleterious materials per Item T-908. Mulches shall not create a wildlife attractant.

102-2.3 Fertilizer. Fertilizer shall be a standard commercial grade and shall conform to all federal and state regulations and to the standards of the Association of Official Agricultural Chemists.

102-2.4 Slope drains. Slope drains may be constructed of pipe, fiber mats, rubble, concrete, asphalt, or other materials that will adequately control erosion.

102-2.5 Silt fence. Silt fence shall consist of polymeric filaments which are formed into a stable network such that filaments retain their relative positions. Synthetic filter fabric shall contain ultraviolet ray inhibitors and stabilizers to provide a minimum of six months of expected usable construction life. Silt fence shall meet the requirements of ASTM D6461.

102-2.6 Other. All other materials shall meet commercial grade standards and shall be approved by the RPR before being incorporated into the project.

CONSTRUCTION REQUIREMENTS

102-3.1 General. In the event of conflict between these requirements and pollution control laws, rules, or regulations of other federal, state, or local agencies, the more restrictive laws, rules, or regulations shall apply.

The RPR shall be responsible for assuring compliance to the extent that construction practices, construction operations, and construction work are involved.

102-3.2 Schedule. Prior to the start of construction, the Contractor shall submit schedules in accordance with the approved Construction Safety and Phasing Plan (CSPP) and the plans for accomplishment of temporary and permanent erosion control work for clearing and grubbing; grading; construction; paving; and structures at watercourses. The Contractor shall also submit a proposed method of erosion and dust control on haul roads and borrow pits and a plan for disposal of waste materials. Work shall not be started until the erosion control schedules and methods of operation for the applicable construction have been accepted by the RPR.

102-3.3 Construction details. The Contractor will be required to incorporate all permanent erosion control features into the project at the earliest practicable time as outlined in the plans and approved CSPP. Except where future construction operations will damage slopes, the Contractor shall perform the permanent seeding and mulching and other specified slope protection work in stages, as soon as substantial areas of exposed slopes can be made available. Temporary erosion and pollution control measures will be used to correct conditions that develop during construction that were not foreseen during the design stage; that are needed prior to installation of permanent control features; or that are needed temporarily to control erosion that develops during normal construction practices, but are not associated with permanent control features on the project.

Where erosion may be a problem, schedule and perform clearing and grubbing operations so that grading operations and permanent erosion control features can follow immediately if project conditions permit. Temporary erosion control measures are required if permanent measures cannot immediately follow grading operations. The RPR shall limit the area of clearing and grubbing, excavation, borrow, and embankment operations in progress, commensurate with the Contractor's capability and progress in keeping the finish grading, mulching, seeding, and other such permanent control measures current with the accepted schedule. If seasonal limitations make such coordination unrealistic, temporary erosion control measures shall be taken immediately to the extent feasible and justified as directed by the RPR.

The Contractor shall provide immediate permanent or temporary pollution control measures to minimize contamination of adjacent streams or other watercourses, lakes, ponds, or other areas of water impoundment as directed by the RPR. If temporary erosion and pollution control measures are required due to the Contractor's negligence, carelessness, or failure to install permanent controls as a part of the work as scheduled or directed by the RPR, the work shall be performed by the Contractor and the cost shall be incidental to this item.

The RPR may increase or decrease the area of erodible earth material that can be exposed at any time based on an analysis of project conditions.

The erosion control features installed by the Contractor shall be maintained by the Contractor during the construction period.

Provide temporary structures whenever construction equipment must cross watercourses at frequent intervals. Pollutants such as fuels, lubricants, bitumen, raw sewage, wash water from concrete mixing operations, and other harmful materials shall not be discharged into any waterways, impoundments or into natural or manmade channels.

102-3.4 Installation, maintenance and removal of silt fence. Silt fences shall extend a minimum of 16 inches and a maximum of 34 inches above the ground surface. Posts shall be set no more than 10 feet on center. Filter fabric shall be cut from a continuous roll to the length required minimizing joints where possible. When joints are necessary, the fabric shall be spliced at a support post with a minimum 12-inch overlap and securely sealed. A trench shall be excavated approximately 4 inches deep by 4 inches wide on the upslope side of the silt fence. The trench shall be backfilled and the soil compacted over the silt fence fabric. Contractor shall remove and dispose of silt that accumulates during construction and prior to

establishment of permanent erosion control. The fence shall be maintained in good working condition until permanent erosion control is established. Silt fence shall be removed upon approval of the RPR.

METHOD OF MEASUREMENT

102-4.1 Temporary erosion and pollution control work required will be performed as scheduled or directed by the RPR. Completed and accepted work will be measured per lump sum. This price shall be full compensation for costs associated with preparation, administration, and superintendence of the Stormwater Pollution Prevention Plan (SWPP). Furnishing all materials, labor, tools, and equipment, and for any fees required by the regulating agency.

102-4.2 Control work performed for protection of construction areas outside the construction limits, such as borrow and waste areas, haul roads, equipment and material storage sites, and temporary plant sites, will not be measured and paid for directly but shall be considered as a subsidiary obligation of the Contractor.

BASIS OF PAYMENT

102-5.1 Accepted quantities of temporary water pollution, soil erosion, and siltation control work ordered by the RPR and measured as provided in paragraph 102-4.1 will be paid for under:

Item C-102	Temporary Air and Water Pollution, Soil Erosion, and Siltation Control, complete, per lump sum.

Progress payments will be calculated by dividing the total lump sum price by the number of months to Final Completion.

REFERENCES

The publications listed below form a part of this specification to the extent referenced. The publications are referred to within the text by the basic designation only.

Advisory Circulars (AC)

AC 150/5200-33 *Hazardous Wildlife Attractants on or Near Airports*

AC 150/5370-2 *Operational Safety on Airports During Construction*

ASTM International (ASTM)

ASTM D6461 *Standard Specification for Silt Fence Materials*

United States Department of Agriculture (USDA)

FAA/USDA Wildlife Hazard Management at Airports, A Manual for Airport Personnel

END OF ITEM C-102

Item C-105 Mobilization

105-1 Description. This item of Work shall consist of, but is not limited to, Work and operations necessary for the movement of personnel, equipment, material, and supplies to and from the Project site for work on the Project except as provided in the contract as separate pay items.

105-2 Mobilization limit. Mobilization shall be limited to 10 percent of the total Project cost.

105-3 Posted notices. Prior to commencement of construction activities, Contractor must post the following documents in a prominent and accessible place where they may be easily viewed by all employees of Prime Contractor and by all employees of subcontractors engaged by Prime Contractor: Equal Employment Opportunity (EEO) Poster "Equal Employment Opportunity is the Law" in accordance with the Office of Federal Contract Compliance Programs Executive Order 11246, as amended; Davis Bacon Wage Poster (WH 1321) - DOL "Notice to All Employees" Poster; and Applicable Davis-Bacon Wage Rate Determination. These notices must remain posted until Final Acceptance of the Work by Owner.

105-4 Engineer/RPR field office. An Engineer/RPR field office is not required.

METHOD OF MEASUREMENT

105-5 Basis of measurement and payment. Based upon the contract lump sum price for "Mobilization" partial payments will be allowed as follows:

a. With first pay request, 25%.

b. When 25% or more of the original contract is earned, an additional 25%.

c. When 50% or more of the original contract is earned, an additional 40%.

d. After Final Inspection, Staging area clean-up and delivery of all Project Closeout materials as required by Section 90, Paragraph 90-11, *Contractor Final Project Documentation,* and SP-48 *Project Closeout Special Provisions* the final 10%.

BASIS OF PAYMENT

105-6 Payment will be made under:

Item C-105	Mobilization, 10%, complete, per lump sum.

REFERENCES

The publications listed below form a part of this Specification to the extent referenced. The publications are referred to within the text by the basic designation only.

Office of Federal Contract Compliance Programs (OFCCP)

Executive Order 11246, as amended

EEOC-P/E-1 – Equal Employment Opportunity is the Law Poster

United States Department of Labor, Wage and Hour Division (WHD)

WH 1321 – Employee Rights under the Davis-Bacon Act Poster

END OF ITEM C-105

Item C-110 Method of Estimating Percentage of Material Within Specification Limits (PWL)

110-1 General. When the specifications provide for acceptance of material based on the method of estimating percentage of material within specification limits (PWL), the PWL will be determined in accordance with this section. All test results for a lot will be analyzed statistically to determine the total estimated percent of the lot that is within specification limits. The PWL is computed using the sample average (X) and sample standard deviation (S_n) of the specified number (n) of sublots for the lot and the specification tolerance limits, L for lower and U for upper, for the particular acceptance parameter. From these values, the respective Quality index, Q_L for Lower Quality Index and/or Q_U for Upper Quality Index, is computed and the PWL for the lot for the specified n is determined from Table 1. All specification limits specified in the technical sections shall be absolute values. Test results used in the calculations shall be to the significant figure given in the test procedure.

There is some degree of uncertainty (risk) in the measurement for acceptance because only a small fraction of production material (the population) is sampled and tested. This uncertainty exists because all portions of the production material have the same probability to be randomly sampled. The Contractor's risk is the probability that material produced at the acceptable quality level is rejected or subjected to a pay adjustment. The Owner's risk is the probability that material produced at the rejectable quality level is accepted.

It is the intent of this section to inform the Contractor that, in order to consistently offset the Contractor's risk for material evaluated, production quality (using population average and population standard deviation) must be maintained at the acceptable quality specified or higher. In all cases, it is the responsibility of the Contractor to produce at quality levels that will meet the specified acceptance criteria when sampled and tested at the frequencies specified.

110-2 Method for computing PWL. The computational sequence for computing PWL is as follows:

a. Divide the lot into n sublots in accordance with the acceptance requirements of the specification.

b. Locate the random sampling position within the sublot in accordance with the requirements of the specification.

c. Make a measurement at each location, or take a test portion and make the measurement on the test portion in accordance with the testing requirements of the specification.

d. Find the sample average (X) for all sublot test values within the lot by using the following formula:

$$\mathbf{X = (x_1 + x_2 + x_3 + \ldots x_n) / n}$$

Where: X = Sample average of all sublot test values within a lot

$x_1, x_2, \ldots x_n$ = Individual sublot test values

n = Number of sublot test values

e. Find the sample standard deviation (S_n) by use of the following formula:

$$S_n = [(d_1^2 + d_2^2 + d_3^2 + \ldots d_n^2)/(n-1)]^{1/2}$$

Where: S_n = Sample standard deviation of the number of sublot test values in the set

$d_1, d_2, \ldots d_n$ = Deviations of the individual sublot test values $x_1, x_2, \ldots$ from the average value X

that is: $d_1 = (x_1 - X)$, $d_2 = (x_2 - X) \ldots d_n = (x_n - X)$

n = Number of sublot test values

f. For single sided specification limits (i.e., L only), compute the Lower Quality Index Q_L by use of the following formula:

$$Q_L = (X - L) / S_n$$

Where: L = specification lower tolerance limit

Estimate the percentage of material within limits (PWL) by entering Table 1 with Q_L, using the column appropriate to the total number (n) of measurements. If the value of Q_L falls between values shown on the table, use the next higher value of PWL.

g. For double-sided specification limits (i.e., L and U), compute the Quality Indexes Q_L and Q_U by use of the following formulas:

$$Q_L = (X - L) / S_n$$
and
$$Q_U = (U - X) / S_n$$

Where: L and U = specification lower and upper tolerance limits

Estimate the percentage of material between the lower (L) and upper (U) tolerance limits (PWL) by entering Table 1 separately with Q_L and Q_U, using the column appropriate to the total number (n) of measurements, and determining the percent of material above P_L and percent of material below P_U for each tolerance limit. If the values of Q_L fall between values shown on the table, use the next higher value of P_L or P_U. Determine the PWL by use of the following formula:

$$PWL = (P_U + P_L) - 100$$

Where: P_L = percent within lower specification limit

P_U = percent within upper specification limit

EXAMPLE OF PWL CALCULATION

Project: Example Project

Test Item: Item P-401, Lot A.

A. PWL Determination for Mat Density.

1. Density of four random cores taken from Lot A.

A-1 = 96.60
A-2 = 97.55
A-3 = 99.30
A-4 = 98.35
n = 4

2. Calculate average density for the lot.

$X = (x_1 + x_2 + x_3 + . . . x_n) / n$
$X = (96.60 + 97.55 + 99.30 + 98.35) / 4$
X = 97.95% density

3. Calculate the standard deviation for the lot.

$S_n = [((96.60 - 97.95)^2 + (97.55 - 97.95)^2 + (99.30 - 97.95)^2 + (98.35 - 97.95)^2)) / (4 - 1)]^{1/2}$
$S_n = [(1.82 + 0.16 + 1.82 + 0.16) / 3]^{1/2}$
$S_n = 1.15$

4. Calculate the Lower Quality Index Q_L for the lot. (L=96.3)

$Q_L = (X - L) / S_n$
$Q_L = (97.95 - 96.30) / 1.15$
$Q_L = 1.4348$

5. Determine PWL by entering Table 1 with Q_L= 1.44 and n= 4.

PWL = 98

B. PWL Determination for Air Voids.

1. Air Voids of four random samples taken from Lot A.

A-1 = 5.00
A-2 = 3.74
A-3 = 2.30
A-4 = 3.25

2. Calculate the average air voids for the lot.

$X = (x_1 + x_2 + x_3 . . . n) / n$
$X = (5.00 + 3.74 + 2.30 + 3.25) / 4$
X = 3.57%

3. Calculate the standard deviation S_n for the lot.

$S_n = [((3.57 - 5.00)^2 + (3.57 - 3.74)^2 + (3.57 - 2.30)^2 + (3.57 - 3.25)^2) / (4 - 1)]^{1/2}$

$S_n = [(2.04 + 0.03 + 1.62 + 0.10) / 3]^{1/2}$

$S_n = 1.12$

4. Calculate the Lower Quality Index Q_L for the lot. (L= 2.0)

$Q_L = (X - L) / S_n$

$Q_L = (3.57 - 2.00) / 1.12$

$Q_L = 1.3992$

5. Determine P_L by entering Table 1 with $Q_L = 1.41$ and n = 4.

$P_L = 97$

6. Calculate the Upper Quality Index Q_U for the lot. (U= 5.0)

$Q_U = (U - X) / S_n$

$Q_U = (5.00 - 3.57) / 1.12$

$Q_U = 1.2702$

7. Determine P_U by entering Table 1 with $Q_U = 1.29$ and n = 4.

$P_U = 93$

8. Calculate Air Voids PWL

$PWL = (P_L + P_U) - 100$

$PWL = (97 + 93) - 100 = 90$

EXAMPLE OF OUTLIER CALCULATION (REFERENCE ASTM E178)

Project: Example Project

Test Item: Item P-401, Lot A.

A. Outlier Determination for Mat Density.

1. Density of four random cores taken from Lot A arranged in descending order.

A-3 = 99.30

A-4 = 98.35

A-2 = 97.55

A-1 = 96.60

2. From ASTM E178, Table 1, for n=4 an upper 5% significance level, the critical value for test criterion = 1.463.

3. Use average density, standard deviation, and test criterion value to evaluate density measurements.

a. For measurements greater than the average:

If (measurement - average)/(standard deviation) is less than test criterion, then the measurement is not considered an outlier.

For A-3, check if (99.30 - 97.95) / 1.15 is greater than 1.463.

Since 1.174 is less than 1.463, the value is not an outlier.

b. For measurements less than the average:

If (average - measurement)/(standard deviation) is less than test criterion, then the measurement is not considered an outlier.

For A-1, check if (97.95 - 96.60) / 1.15 is greater than 1.463.

Since 1.435 is less than 1.463, the value is not an outlier.

Note: In this example, a measurement would be considered an outlier if the density were:

Greater than (97.95 + 1.463 × 1.15) = 99.63%

OR

less than (97.95 - 1.463 × 1.15) = 96.27%.

Table 1. Table for Estimating Percent of Lot Within Limits (PWL)

Percent Within Limits (P_L and P_U)	Positive Values of Q (Q_L and Q_U)							
	n=3	n=4	n=5	n=6	n=7	n=8	n=9	n=10
99	1.1541	1.4700	1.6714	1.8008	1.8888	1.9520	1.9994	2.0362
98	1.1524	1.4400	1.6016	1.6982	1.7612	1.8053	1.8379	1.8630
97	1.1496	1.4100	1.5427	1.6181	1.6661	1.6993	1.7235	1.7420
96	1.1456	1.3800	1.4897	1.5497	1.5871	1.6127	1.6313	1.6454
95	1.1405	1.3500	1.4407	1.4887	1.5181	1.5381	1.5525	1.5635
94	1.1342	1.3200	1.3946	1.4329	1.4561	1.4717	1.4829	1.4914
93	1.1269	1.2900	1.3508	1.3810	1.3991	1.4112	1.4199	1.4265
92	1.1184	1.2600	1.3088	1.3323	1.3461	1.3554	1.3620	1.3670
91	1.1089	1.2300	1.2683	1.2860	1.2964	1.3032	1.3081	1.3118
90	1.0982	1.2000	1.2290	1.2419	1.2492	1.2541	1.2576	1.2602
89	1.0864	1.1700	1.1909	1.1995	1.2043	1.2075	1.2098	1.2115
88	1.0736	1.1400	1.1537	1.1587	1.1613	1.1630	1.1643	1.1653
87	1.0597	1.1100	1.1173	1.1192	1.1199	1.1204	1.1208	1.1212
86	1.0448	1.0800	1.0817	1.0808	1.0800	1.0794	1.0791	1.0789
85	1.0288	1.0500	1.0467	1.0435	1.0413	1.0399	1.0389	1.0382
84	1.0119	1.0200	1.0124	1.0071	1.0037	1.0015	1.0000	0.9990
83	0.9939	0.9900	0.9785	0.9715	0.9671	0.9643	0.9624	0.9610
82	0.9749	0.9600	0.9452	0.9367	0.9315	0.9281	0.9258	0.9241
81	0.9550	0.9300	0.9123	0.9025	0.8966	0.8928	0.8901	0.8882
80	0.9342	0.9000	0.8799	0.8690	0.8625	0.8583	0.8554	0.8533
79	0.9124	0.8700	0.8478	0.8360	0.8291	0.8245	0.8214	0.8192
78	0.8897	0.8400	0.8160	0.8036	0.7962	0.7915	0.7882	0.7858
77	0.8662	0.8100	0.7846	0.7716	0.7640	0.7590	0.7556	0.7531
76	0.8417	0.7800	0.7535	0.7401	0.7322	0.7271	0.7236	0.7211
75	0.8165	0.7500	0.7226	0.7089	0.7009	0.6958	0.6922	0.6896
74	0.7904	0.7200	0.6921	0.6781	0.6701	0.6649	0.6613	0.6587
73	0.7636	0.6900	0.6617	0.6477	0.6396	0.6344	0.6308	0.6282
72	0.7360	0.6600	0.6316	0.6176	0.6095	0.6044	0.6008	0.5982
71	0.7077	0.6300	0.6016	0.5878	0.5798	0.5747	0.5712	0.5686
70	0.6787	0.6000	0.5719	0.5582	0.5504	0.5454	0.5419	0.5394
69	0.6490	0.5700	0.5423	0.5290	0.5213	0.5164	0.5130	0.5105
68	0.6187	0.5400	0.5129	0.4999	0.4924	0.4877	0.4844	0.4820
67	0.5878	0.5100	0.4836	0.4710	0.4638	0.4592	0.4560	0.4537
66	0.5563	0.4800	0.4545	0.4424	0.4355	0.4310	0.4280	0.4257
65	0.5242	0.4500	0.4255	0.4139	0.4073	0.4030	0.4001	0.3980
64	0.4916	0.4200	0.3967	0.3856	0.3793	0.3753	0.3725	0.3705
63	0.4586	0.3900	0.3679	0.3575	0.3515	0.3477	0.3451	0.3432
62	0.4251	0.3600	0.3392	0.3295	0.3239	0.3203	0.3179	0.3161
61	0.3911	0.3300	0.3107	0.3016	0.2964	0.2931	0.2908	0.2892
60	0.3568	0.3000	0.2822	0.2738	0.2691	0.2660	0.2639	0.2624
59	0.3222	0.2700	0.2537	0.2461	0.2418	0.2391	0.2372	0.2358
58	0.2872	0.2400	0.2254	0.2186	0.2147	0.2122	0.2105	0.2093
57	0.2519	0.2100	0.1971	0.1911	0.1877	0.1855	0.1840	0.1829
56	0.2164	0.1800	0.1688	0.1636	0.1607	0.1588	0.1575	0.1566

Percent Within Limits (P_L and P_U)	Positive Values of Q (Q_L and Q_U)							
	n=3	n=4	n=5	n=6	n=7	n=8	n=9	n=10
55	0.1806	0.1500	0.1406	0.1363	0.1338	0.1322	0.1312	0.1304
54	0.1447	0.1200	0.1125	0.1090	0.1070	0.1057	0.1049	0.1042
53	0.1087	0.0900	0.0843	0.0817	0.0802	0.0793	0.0786	0.0781
52	0.0725	0.0600	0.0562	0.0544	0.0534	0.0528	0.0524	0.0521
51	0.0363	0.0300	0.0281	0.0272	0.0267	0.0264	0.0262	0.0260
50	0.0000	0.0000	0.0000	0.0000	0.0000	0.0000	0.0000	0.0000

Percent Within Limits (P_L and P_U)	Negative Values of Q (Q_L and Q_U)							
	n=3	n=4	n=5	n=6	n=7	n=8	n=9	n=10
49	-0.0363	-0.0300	-0.0281	-0.0272	-0.0267	-0.0264	-0.0262	-0.0260
48	-0.0725	-0.0600	-0.0562	-0.0544	-0.0534	-0.0528	-0.0524	-0.0521
47	-0.1087	-0.0900	-0.0843	-0.0817	-0.0802	-0.0793	-0.0786	-0.0781
46	-0.1447	-0.1200	-0.1125	-0.1090	-0.1070	-0.1057	-0.1049	-0.1042
45	-0.1806	-0.1500	-0.1406	-0.1363	-0.1338	-0.1322	-0.1312	-0.1304
44	-0.2164	-0.1800	-0.1688	-0.1636	-0.1607	-0.1588	-0.1575	-0.1566
43	-0.2519	-0.2100	-0.1971	-0.1911	-0.1877	-0.1855	-0.1840	-0.1829
42	-0.2872	-0.2400	-0.2254	-0.2186	-0.2147	-0.2122	-0.2105	-0.2093
41	-0.3222	-0.2700	-0.2537	-0.2461	-0.2418	-0.2391	-0.2372	-0.2358
40	-0.3568	-0.3000	-0.2822	-0.2738	-0.2691	-0.2660	-0.2639	-0.2624
39	-0.3911	-0.3300	-0.3107	-0.3016	-0.2964	-0.2931	-0.2908	-0.2892
38	-0.4251	-0.3600	-0.3392	-0.3295	-0.3239	-0.3203	-0.3179	-0.3161
37	-0.4586	-0.3900	-0.3679	-0.3575	-0.3515	-0.3477	-0.3451	-0.3432
36	-0.4916	-0.4200	-0.3967	-0.3856	-0.3793	-0.3753	-0.3725	-0.3705
35	-0.5242	-0.4500	-0.4255	-0.4139	-0.4073	-0.4030	-0.4001	-0.3980
34	-0.5563	-0.4800	-0.4545	-0.4424	-0.4355	-0.4310	-0.4280	-0.4257
33	-0.5878	-0.5100	-0.4836	-0.4710	-0.4638	-0.4592	-0.4560	-0.4537
32	-0.6187	-0.5400	-0.5129	-0.4999	-0.4924	-0.4877	-0.4844	-0.4820
31	-0.6490	-0.5700	-0.5423	-0.5290	-0.5213	-0.5164	-0.5130	-0.5105
30	-0.6787	-0.6000	-0.5719	-0.5582	-0.5504	-0.5454	-0.5419	-0.5394
29	-0.7077	-0.6300	-0.6016	-0.5878	-0.5798	-0.5747	-0.5712	-0.5686
28	-0.7360	-0.6600	-0.6316	-0.6176	-0.6095	-0.6044	-0.6008	-0.5982
27	-0.7636	-0.6900	-0.6617	-0.6477	-0.6396	-0.6344	-0.6308	-0.6282
26	-0.7904	-0.7200	-0.6921	-0.6781	-0.6701	-0.6649	-0.6613	-0.6587
25	-0.8165	-0.7500	-0.7226	-0.7089	-0.7009	-0.6958	-0.6922	-0.6896
24	-0.8417	-0.7800	-0.7535	-0.7401	-0.7322	-0.7271	-0.7236	-0.7211
23	-0.8662	-0.8100	-0.7846	-0.7716	-0.7640	-0.7590	-0.7556	-0.7531
22	-0.8897	-0.8400	-0.8160	-0.8036	-0.7962	-0.7915	-0.7882	-0.7858
21	-0.9124	-0.8700	-0.8478	-0.8360	-0.8291	-0.8245	-0.8214	-0.8192
20	-0.9342	-0.9000	-0.8799	-0.8690	-0.8625	-0.8583	-0.8554	-0.8533
19	-0.9550	-0.9300	-0.9123	-0.9025	-0.8966	-0.8928	-0.8901	-0.8882
18	-0.9749	-0.9600	-0.9452	-0.9367	-0.9315	-0.9281	-0.9258	-0.9241
17	-0.9939	-0.9900	-0.9785	-0.9715	-0.9671	-0.9643	-0.9624	-0.9610
16	-1.0119	-1.0200	-1.0124	-1.0071	-1.0037	-1.0015	-1.0000	-0.9990
15	-1.0288	-1.0500	-1.0467	-1.0435	-1.0413	-1.0399	-1.0389	-1.0382
14	-1.0448	-1.0800	-1.0817	-1.0808	-1.0800	-1.0794	-1.0791	-1.0789
13	-1.0597	-1.1100	-1.1173	-1.1192	-1.1199	-1.1204	-1.1208	-1.1212
12	-1.0736	-1.1400	-1.1537	-1.1587	-1.1613	-1.1630	-1.1643	-1.1653
11	-1.0864	-1.1700	-1.1909	-1.1995	-1.2043	-1.2075	-1.2098	-1.2115
10	-1.0982	-1.2000	-1.2290	-1.2419	-1.2492	-1.2541	-1.2576	-1.2602
9	-1.1089	-1.2300	-1.2683	-1.2860	-1.2964	-1.3032	-1.3081	-1.3118
8	-1.1184	-1.2600	-1.3088	-1.3323	-1.3461	-1.3554	-1.3620	-1.3670
7	-1.1269	-1.2900	-1.3508	-1.3810	-1.3991	-1.4112	-1.4199	-1.4265
6	-1.1342	-1.3200	-1.3946	-1.4329	-1.4561	-1.4717	-1.4829	-1.4914
5	-1.1405	-1.3500	-1.4407	-1.4887	-1.5181	-1.5381	-1.5525	-1.5635
4	-1.1456	-1.3800	-1.4897	-1.5497	-1.5871	-1.6127	-1.6313	-1.6454

Percent Within Limits (P_L and P_U)	Negative Values of Q (Q_L and Q_U)							
	n=3	n=4	n=5	n=6	n=7	n=8	n=9	n=10
3	-1.1496	-1.4100	-1.5427	-1.6181	-1.6661	-1.6993	-1.7235	-1.7420
2	-1.1524	-1.4400	-1.6016	-1.6982	-1.7612	-1.8053	-1.8379	-1.8630
1	-1.1541	-1.4700	-1.6714	-1.8008	-1.8888	-1.9520	-1.9994	-2.0362

REFERENCES

The publications listed below form a part of this specification to the extent referenced. The publications are referred to within the text by the basic designation only.

ASTM International (ASTM)

ASTM E178 Standard Practice for Dealing with Outlying Observations

END OF ITEM C-110

Item P-101 Preparation/Removal of Existing Pavements

DESCRIPTION

101-1 This item shall consist of removal of asphaltic and concrete existing pavement and other miscellaneous items. The Work shall be accomplished in accordance with these Specifications and the applicable Plans.

EQUIPMENT AND MATERIALS

101-2 All equipment and materials shall be specified here and in the following paragraphs or approved by the Resident Project Representative (RPR). The equipment shall not cause damage to the pavement to remain in place.

CONSTRUCTION

101-3.1 Removal of existing pavement.

Contractor's removal operation shall be controlled to not damage adjacent pavement structure, and base material, cables, utility ducts, pipelines, or drainage structures which are to remain under the pavement.

a. Concrete pavement removal. Full depth saw cuts shall be made perpendicular to the slab surface. Where the perimeter of the removal limits is not located on the joint, the perimeter shall be saw cut the full depth of the pavement. The pavement inside the saw cut shall be removed by methods which will not cause distress in the pavement which is to remain in place. Removed concrete paving material is to be disposed off of airport site.

The edge of existing pavement shall be protected from damage at all times. Adjacent areas damaged shall be repaired or replaced at Contractor's expense.

b. Asphalt pavement removal. Asphalt pavement to be removed shall be cut to the full depth of the asphalt pavement around the perimeter of the area to be removed. Removed material is to be removed from the airport site.

At certain locations noted on the Plans, existing asphalt shall be removed that surrounds existing runway threshold lights and manholes. However, the base material beneath the asphalt shall remain in place. This concept minimizes construction impact to the existing threshold lights.

c. Repair or removal of Base. All material including base course shall be removed at dimensional limits per the Project Plans. Materials and methods of construction shall comply with the applicable Sections of these Specifications. Any damage caused by Contractor's removal process shall be repaired at Contractor's expense. Per 101-3.1.b, existing base material in threshold light areas shall remain in place.

101-3.2 Preparation of joints and cracks prior to overlay/surface treatment. Not Used.

101-3.3 Removal of Foreign Substances/contaminates. Not Used.

101-3.4 Concrete spall or failed asphaltic concrete pavement repair. Not Used.

101-3.5 Cold milling. Not Used.

101-3.6. Preparation of asphalt pavement surfaces prior to surface treatment. Not Used.

101-3.7 Maintenance. Contractor shall perform all maintenance work necessary to keep the pavement in a satisfactory condition until the full section is complete and accepted by the RPR. The surface shall be kept clean and free from foreign material. The pavement shall be properly drained at all times. If cleaning is necessary or if the pavement becomes disturbed, any work repairs necessary shall be performed at Contractor's expense.

101-3.8 Preparation of Joints in Rigid Pavement prior to resealing. Not Used.

101-3.8.1 Removal of Existing Joint Sealant. Not Used.

101-3.8.2 Cleaning prior to sealing. Not Used.

101-3.8.3 Joint sealant. Not Used.

101-3.9 Preparation of Cracks in Flexible Pavement prior to sealing. Not Used.

101-3.9.1 Preparation of Crack. Not Used.

101-3.9.2 Removal of Existing Crack Sealant. Not Used.

101-3.9.3 Crack Sealant. Not Used.

101-3.9.4 Removal of Pipe and other Buried Structures.

a. **Removal of Existing Pipe Material.** Not Used.
b. **Removal of Inlets/Manholes.** Not Used.

METHOD OF MEASUREMENT

101-4.1 Pavement removal (Asphaltic or Concrete). The unit of measurement for pavement removal shall be the number of square yards removed by Contractor. Any pavement removed outside the limits of removal because the pavement was damaged by negligence on the part of Contractor shall not be included in the measurement for payment. No direct measurement or payment shall be made for saw cutting. Saw cutting shall be incidental to pavement removal.

BASIS OF PAYMENT

101-5.1 Payment. Payment shall be made at contract unit price for the unit of measurement as specified above. This price shall be full compensation for furnishing all materials and for all preparation, hauling, and placing of the material and for all labor, equipment, tools, and incidentals necessary to complete this item.

Item P 101-5.1a	Remove Existing Asphaltic Pavement, complete, per square yard.
Item P 101-5.1b	Remove Existing Concrete Pavement, complete, per square yard.

REFERENCES

The publications listed below form a part of this Specification to the extent referenced. The publications are referred to within the text by the basic designation only.

Advisory Circulars (AC)

AC 150/5380-6	Guidelines and Procedures for Maintenance of Airport Pavements.

ASTM International (ASTM)

ASTM D6690	Standard Specification for Joint and Crack Sealants, Hot Applied, for Concrete and Asphalt Pavements

END OF ITEM P-101

Item P-152 Excavation, Subgrade, and Embankment

DESCRIPTION

152-1.1 This item covers excavation, disposal, placement, and compaction of all materials within the limits of the work required to construct safety areas, runways, taxiways, aprons, and intermediate areas as well as other areas for drainage, building construction, parking, or other purposes in accordance with these Specifications and in conformity to the dimensions and typical sections shown on the Plans.

152-1.2 Classification. All material excavated shall be classified as defined below:

a. Unclassified excavation. Unclassified excavation shall consist of the excavation and disposal of all material, regardless of its nature.

152-1.3 Unsuitable excavation. Unsuitable material shall be disposed off airport property. Materials containing grass, weeds, vegetable, or organic matter, such as muck, peat, organic silt, or sod shall be considered unsuitable for use in embankment construction. Material suitable for topsoil may be used on the embankment slope when approved by the RPR.

CONSTRUCTION METHODS

152-2.1 General. Before beginning excavation, grading, and embankment operations in any area, the area shall be cleared or cleared to remove grass, weeds, and other organic matter.

The suitability of material to be placed in embankments shall be subject to approval by the RPR. All unsuitable material shall be disposed off Airport property.

When Contractor's excavating operations encounter artifacts of historical or archaeological significance, the operations shall be temporarily discontinued and the RPR notified per Section 70, Paragraph 70-20. At the direction of the RPR, Contractor shall excavate the site in such a manner as to preserve the artifacts encountered and allow for their removal. Such excavation will be paid for as extra work.

Areas outside the limits of the pavement areas where the top layer of soil has become compacted by hauling or other Contractor activities shall be scarified and disked to a depth of 4 inches, to loosen and pulverize the soil. Stones or rock fragments larger than 4 inches in their greatest dimension will not be permitted in the top 6 inches of the subgrade.

If it is necessary to interrupt existing surface drainage, sewers or under-drainage, conduits, utilities, or similar underground structures, Contractor shall be responsible for and shall take all necessary precautions to preserve them or provide temporary services. When such facilities are encountered, Contractor shall notify the RPR, who shall arrange for their removal if necessary. Contractor, at their own expense, shall satisfactorily repair or pay the cost of all damage to such facilities or structures that may result from any of Contractor's operations during the period of the Contract.

a. Blasting. Blasting shall not be allowed.

152-2.2 Excavation. No excavation shall be started until the work has been staked out by Contractor, and the RPR has obtained from Contractor, verification survey shots of the elevations and measurements of the ground surface. Contractor and RPR shall agree that the original ground lines shown on the original topographic mapping are accurate or agree to any adjustments made to the original ground lines.

All areas to be excavated shall be stripped of vegetation and topsoil. Topsoil shall be stockpiled for future use in areas designated on the Plans or by the RPR. All suitable excavated material shall be used in the formation of embankment, subgrade, or other purposes **as** shown on the Plans. All unsuitable material and excess material from this Project shall be disposed off Airport property.

The grade shall be maintained so that the surface is well drained at all times.

When the volume of the excavation exceeds that required to construct the embankments to the grades as indicated on the Plans, the excess shall be disposed off Airport property. When the volume of excavation is not sufficient for constructing the embankments to the grades indicated, Contractor shall coordinate obtaining borrow material from off Airport property. (Refer to 152-2.3.)

No direct measurement for excavation. Excavation costs are considered incidental to placing subgrade embankment in lifts, compacting, discing, watering, mixing, sloping, and other operations necessary for construction of subgrade embankments. Payment for compacted embankment will be made under "embankment in-place." No direct payment will be made for excavation, borrow, or excess material disposal.

a. Selective grading. The more suitable material designated by the RPR shall be used in constructing the embankment or in capping the pavement subgrade. If, at the time of excavation, it is not possible to place this material in its final location, it shall be stockpiled in approved areas until it can be placed. The more suitable material shall then be placed and compacted as specified. Selective grading shall be considered incidental to the work involved. The cost of stockpiling and placing the material shall be included in the various pay items of work involved.

Remove base material lying under asphaltic pavement removal areas of this Project. At Contractor option, this material may be reused as subgrade embankment, or removed from Site and disposed off Airport property. This base material shall be categorized as Unclassified per 152-2.2, and no direct measurement or payment for manipulation made.

b. Undercutting. Rock, shale, hardpan, loose rock, boulders, or other material unsatisfactory for safety areas, subgrades, roads, shoulders, or any areas intended for turf shall be excavated to a minimum depth of 12 inches below the subgrade or to the depth specified by the RPR. Muck, peat, matted roots, or other yielding material, unsatisfactory for subgrade foundation, shall be removed to the depth specified. Unsuitable materials shall be disposed off the airport. The cost is incidental to this item. The excavated area shall be backfilled with suitable material obtained from the grading operations or borrow areas and compacted to specified densities. The necessary backfill will constitute a part of the embankment. Where rock cuts are made, backfill with select material.

c. Over-break. Over-break, including slides, is that portion of any material displaced or loosened beyond the finished work as planned or authorized by the RPR. All over-break shall be graded or removed by the Contractor and disposed of as directed by the RPR. The RPR shall determine if the displacement of such material was unavoidable and their own decision shall be final. Payment will not be made for the removal and disposal of over-break that the RPR determines as avoidable. Unavoidable over-break will be classified as "Unclassified Excavation."

d. Removal of utilities. The removal of existing above-ground structures and utilities required to permit the orderly progress of Work will be accomplished by someone other than Contractor. All existing foundations shall be excavated at least 2 feet below the top of subgrade or as indicated on the Plans, and the material disposed of as directed by the RPR. All foundations thus excavated shall be backfilled with suitable material and compacted as specified for embankment or as shown on the Plans.

152-2.3 Borrow excavation. There are no borrow sources within the boundaries of the airport property. Contractor shall locate and obtain borrow sources, subject to the approval of the RPR. Contractor shall notify the RPR at least 15 days prior to beginning the excavation so necessary measurements and tests can

be made by the RPR. All borrow pits shall be opened to expose the various strata of acceptable material to allow obtaining a uniform product. Borrow areas shall be drained and left in a neat, presentable condition with all slopes dressed uniformly. Borrow areas shall not create a hazardous wildlife attractant.

152-2.4 Drainage excavation. Not Used.

152-2.5 Proof rolling. Proof rolling subgrade identifies any weak areas in subgrade but is not for subgrade compaction. Before start of embankment, the “compact-in-place” subgrade layer shall be proof rolled with compaction equipment suitable to and in the presence of the RPR. Apply a minimum of two coverages, or as specified by the RPR, under pavement areas. A coverage is defined as the application of one tire print over the designated area. Soft areas of subgrade that deflect more than 1 inch or show permanent deformation greater than 1 inch shall be removed and replaced with suitable material or reworked to conform to the moisture content and compaction requirements in accordance with these Specifications. Removal and replacement of soft areas as incidental to this item. The “compact-in-place” Layer shall then be compacted per 152-2.7.

152-2.6 Preparation of cut areas or areas where existing pavement has been removed. In those areas on which a subbase or base course is to be placed, the top 12 inches (two each, 6 inch compacted layers) of subgrade shall be compacted to not less than 95% of maximum density for cohesive soils as determined by ASTM D1557. As used in this specification, "non-cohesive" shall mean those soils having a plasticity index (PI) of less than 3 as determined by ASTM D4318.

152-2.7 Preparation of embankment area. All sod and vegetative matter shall be removed from the surface upon which the embankment is to be placed. The compact-in-place surface shall be broken up by plowing or scarifying to a minimum depth of 6 inches and shall then be compacted per Paragraph 152-2.10.

152-2.8 Control Strip. Not Used.

152-2.9 Formation of embankments. The material shall be constructed in lifts of no more than 6 inches of compacted thickness.

When more than one lift is required to establish the layer thickness shown on the Plans, the construction procedure described here shall apply to each lift. No lift shall be covered by subsequent lifts until tests verify that compaction requirements have been met. Contractor shall rework, re-compact and retest any material placed which does not meet the Specifications.

The lifts shall be placed, to produce a soil structure as shown on the typical cross-section or as directed by the RPR. Materials such as brush, hedge, roots, stumps, grass and other organic matter, shall not be incorporated or buried in the embankment.

Earthwork operations shall be suspended at any time when satisfactory results cannot be obtained due to rain, freezing, or other unsatisfactory weather conditions in the field. Frozen material shall not be placed in the embankment nor shall embankment be placed upon frozen material. Material shall not be placed on surfaces that are muddy, frozen, or contain frost. Contractor shall drag, blade, or slope the embankment to provide surface drainage at all times.

The material in each lift shall be within ±2% of optimum moisture content before rolling to obtain the prescribed compaction. The material shall be moistened or aerated as necessary to achieve a uniform moisture content throughout the lift. Natural drying may be accelerated by blending in dry material or manipulation alone to increase the rate of evaporation.

Contractor shall make the necessary corrections and adjustments in methods, materials, or moisture content to achieve the specified embankment density.

The RPR will take samples of excavated materials which will be used in embankment for testing to obtain a Moisture-Density Relations of Soils Report (Proctor) in accordance with ASTM D1557. A new Proctor shall be obtained for each soil type based on visual classification.

Density tests will be taken by the RPR for every 1,000 square yards of compacted embankment for each lift which is required to be compacted, or other appropriate frequencies as determined by the RPR.

If the material has greater than 30% retained on the 3/4-inch sieve, follow AASHTO T-180 Annex Correction of maximum dry density and optimum moisture for oversized particles.

Rolling operations shall be continued until the embankment is compacted to not less than 95% of maximum density for cohesive soils as determined by ASTM D1557. Under all areas to be paved, the embankments shall be compacted to a depth per the paving section plan details. As used in this Specification, "non-cohesive" shall mean those soils having a plasticity index (PI) of less than 3 as determined by ASTM D4318.

On all areas outside of the pavement areas, no compaction will be required on the top 4 inches which shall be prepared for a seedbed in accordance with Item T-901.

The in-place field density shall be determined in accordance with ASTM 6938 using Procedure A, the direct transmission method, and ASTM D6938 shall be used to determine the moisture content of the material. The machine shall be calibrated in accordance with ASTM D6938. The RPR shall perform all density tests. If the specified density is not attained, the area represented by the test or as designated by the RPR shall be reworked and/or re-compacted and additional random tests made. This procedure shall be followed until the specified density is reached.

Compaction areas shall be kept separate, and no lift shall be covered by another lift until the proper density is obtained.

During construction of the embankment, the Contractor shall route all construction equipment evenly over the entire width of the embankment as each lift is placed. Lift placement shall begin in the deepest portion of the embankment fill. As placement progresses, the lifts shall be constructed approximately parallel to the finished pavement grade line.

Stones, fragmentary rock, and recycled pavement larger than 4 inches in their greatest dimensions will not be allowed in the top 12 inches of the subgrade. Rockfill shall be brought up in lifts as specified or as directed by the RPR and the finer material shall be used to fill the voids forming a dense, compact mass.

152-2.10 Compaction requirements. The subgrade under areas to be paved shall be compacted to a depth of 12 inches and to a density of not less than 95% of the maximum dry density as determined by ASTM D1557. The subgrade in Runway 34L blast pad areas shall be compacted in maximum 6 inch lifts and to a density of not less than 90% of the maximum density as determined by ASTM D698.

The material to be compacted shall be within ±2% of optimum moisture content before being rolled to obtain the prescribed compaction (except for expansive soils). When the material has greater than 30% retained on the 3/4 inch sieve, follow the methods in ASTM D1557 for correction of maximum dry density and optimum moisture for oversized particles. Tests for moisture content and compaction will be taken at a minimum of 1,000 square yards of subgrade. All quality assurance testing shall be done by the RPR.

The in-place field density shall be determined in accordance with ASTM D6938 using Procedure A, the direct transmission method, and ASTM D6938 shall be used to determine the moisture content of the material. The machine shall be calibrated in accordance with ASTM D6938 within 12 months prior to its use on this Contract. The gage shall be field standardized daily.

Density tests will be taken by the RPR for every 1,000 square yards of completed subgrade. If a nuclear gage is used for density determination, two random readings shall be made for each 5,000 square yards.

Maximum density refers to maximum dry density at optimum moisture content unless otherwise specified.

If the specified density is not attained, the entire lot shall be reworked and/or re-compacted and additional random tests made. This procedure shall be followed until the specified density is reached.

All cut-and-fill slopes shall be uniformly dressed to the slope, cross-section, and alignment shown on the Plans or as directed by the RPR and the finished subgrade shall be maintained.

152-2.11 Finishing and protection of subgrade. Finishing and protection of the subgrade is incidental to this item. Grading and compacting of the subgrade shall be performed so that it will drain readily. All low areas, holes or depressions in the subgrade shall be brought to grade. Scarifying, blading, rolling and other methods shall be performed to provide a thoroughly compacted subgrade shaped to the lines and grades shown on the plans. All ruts or rough places that develop in the completed subgrade shall be graded, re-compacted, and retested. Contractor shall protect the subgrade from damage and limit hauling over the subgrade to only traffic essential for construction purposes.

Contractor shall maintain the completed course in satisfactory condition throughout placement of subsequent layers. No subbase, base, or surface course shall be placed on the subgrade until the subgrade has been accepted by the RPR.

152-2.12 Haul. All hauling will be considered a necessary and incidental part of the work. Contractor shall include the cost in the contract unit price for the pay of items of work involved. No payment will be made separately or directly for hauling on any part of the Work.

Contractor's equipment shall not cause damage to any excavated surface, compacted lift or to the subgrade as a result of hauling operations. Any damage caused as a result of Contractor's hauling operations shall be repaired at Contractor's expense.

Contractor shall be responsible for providing, maintaining and removing any haul roads or routes within or outside of the work area, and shall return the affected areas to their former condition, unless otherwise authorized in writing by Owner. No separate payment will be made for any work or materials associated with providing, maintaining and removing haul roads or routes.

152-2.13 Surface Tolerances. In those areas on which a subbase or base course is to be placed, the surface shall be tested for smoothness and accuracy of grade and crown. Any portion lacking the required smoothness or failing in accuracy of grade or crown shall be scarified to a depth of at least 3 inches, reshaped and re-compacted to grade until the required smoothness and accuracy are obtained and approved by the RPR. Contractor shall perform all final smoothness and grade checks in the presence of the RPR. Any deviation in surface tolerances shall be corrected by Contractor at Contractor’s expense.

a. **Smoothness.** The finished surface shall not vary more than +/- 1/2 inch when tested with a 12-foot straightedge applied parallel with and at right angles to the centerline. The straightedge shall be moved continuously forward at half the length of the 12-foot straightedge for the full length of each line on a 50-foot grid.

b. **Grade.** The grade and crown shall be measured on a 50-foot grid and shall be within +/-0.05 feet of the specified grade.

On safety areas, turfed areas and other designated areas within the grading limits where no subbase or base is to placed, grade shall not vary more than 0.10 feet from specified grade. Any deviation in excess of this amount shall be corrected by loosening, adding or removing materials, and reshaping.

152-2.14 Topsoil. When topsoil is specified or required as shown on the plans or under Item T-905, it shall be salvaged from stripping or other grading operations. The topsoil shall meet the requirements of Item T-905. If, at the time of excavation or stripping, the topsoil cannot be placed in its final section of finished construction, the material shall be stockpiled at approved locations. Stockpiles shall be located as shown on the Plans and the approved CSPP and shall not be placed on areas that subsequently will require any excavation or embankment fill. If, in the judgment of the RPR, it is practical to place the salvaged topsoil at the time of excavation or stripping, the material shall be placed in its final position without stockpiling or further re-handling.

Upon completion of grading operations, stockpiled topsoil shall be handled and placed as shown on the Plans and as required in Item T-905. Topsoil shall be paid for as provided in Item T-905. No direct payment will be made for topsoil under Item P-152.

METHOD OF MEASUREMENT

152-3.1 Measurement for payment specified by the cubic yard shall be computed by the average end areas of design cross sections combined with the applicable plan view. Cubic yard quantities shall include a 6 inch thickness attributed to the subgrade compact-in-place layer.

152-3.2 The quantity of embankment in place shall be the number of cubic yards measured in its final position.

BASIS OF PAYMENT

152-4.1 For embankment in place, payment shall be made at the contract unit price per cubic yard. This price shall be full compensation for furnishing all materials, labor, equipment, tools, and incidentals necessary to complete the item.

Per 152-2.2 Excavation, payment for excavation will be included in the item "Embankment." Therefore, excavation and embankment shall be included in the embankment item.

Payment will be made under:

Item P-152-4.1 Embankment in place, complete, per cubic yard

REFERENCES

The publications listed below form a part of this Specification to the extent referenced. The publications are referred to within the text by the basic designation only.

American Association of State Highway and Transportation Officials (AASHTO)

AASHTO T-180	Standard Method of Test for Moisture-Density Relations of Soils Using a 4.54-kg (10-lb) Rammer and a 457-mm (18-in.) Drop

ASTM International (ASTM)

ASTM D698	Standard Test Methods for Laboratory Compaction Characteristics of Soil Using Standard Effort (12,400 ft-lbf/ft^3 (600 kN-m/m^3))
ASTM D1556	Standard Test Method for Density and Unit Weight of Soil in Place by the Sand-Cone Method
ASTM D1557	Standard Test Methods for Laboratory Compaction Characteristics of Soil Using Modified Effort (56,000 ft-lbf/ft^3 (2700 kN-m/m^3))
ASTM D6938	Standard Test Methods for In-Place Density and Water Content of Soil and Soil-Aggregate by Nuclear Methods (Shallow Depth)

Advisory Circulars (AC)

AC 150/5370-2	Operational Safety on Airports During Construction Software

Software

FAARFIELD – FAA Rigid and Flexible Iterative Elastic Layered Design

U.S. Department of Transportation

FAA RD-76-66 Design and Construction of Airport Pavements on Expansive Soils

END OF ITEM P-152

Item P-401 Asphalt Mix Pavement

DESCRIPTION

401-1.1 This item shall consist of pavement courses composed of mineral aggregate and asphalt binder mixed in a central mixing plant and placed on a prepared base or stabilized course in accordance with these Specifications and shall conform to the lines, grades, thicknesses, and typical cross-sections shown on the Plans. Each course shall be constructed to the depth, typical section, and elevation required by the Plans and shall be rolled, finished, and approved before the placement of the next course.

MATERIALS

401-2.1 Aggregate. Aggregates shall consist of crushed stone, crushed gravel, crushed slag, screenings, natural sand, and mineral filler, as required. The aggregates should have no known history of detrimental pavement staining due to ferrous sulfides, such as pyrite. Coarse aggregate is the material retained on the No. 4 sieve. Fine aggregate is the material passing the No. 4 sieve.

a. Coarse aggregate. Coarse aggregate shall consist of sound, tough, durable particles, free from films of matter that would prevent thorough coating and bonding with the asphalt material and free from organic matter and other deleterious substances. Coarse aggregate material requirements are given in the table below.

Coarse Aggregate Material Requirements

Material Test	Requirement	Standard
Resistance to Degradation	Loss: 40% maximum	ASTM C131
Soundness of Aggregates by Use of Sodium Sulfate **or** Magnesium Sulfate	Loss after 5 cycles: 12% maximum using Sodium sulfate - or - 18% maximum using magnesium sulfate	ASTM C88
Clay lumps and friable particles	0.3% maximum	ASTM C142
Percentage of Fractured Particles	For pavements designed for aircraft gross weights of 60,000 pounds (27200 kg) or more: Minimum 75% by weight of particles with at least two fractured faces and 85% with at least one fractured face[1]	ASTM D5821
Flat, Elongated, or Flat and Elongated Particles	8% maximum, by weight, of flat, elongated, or flat and elongated particles at 5:1 [2]	ASTM D4791

[1] The area of each face shall be equal to at least 75% of the smallest mid-sectional area of the piece. When two fractured faces are contiguous, the angle between the planes of fractures shall be at least 30 degrees to count as two fractured faces.

[2] A flat particle is one having a ratio of width to thickness greater than five (5); an elongated particle is one having a ratio of length to width greater than five (5).

b. Fine aggregate. Fine aggregate shall consist of clean, sound, tough, durable, angular shaped particles produced by crushing stone, slag, or gravel and shall be free from coatings of clay, silt, or other objectionable matter. Natural (non-manufactured) sand may be used to obtain the gradation of the fine aggregate blend or to improve the workability of the mix. Fine aggregate material requirements are listed in the table below.

Fine Aggregate Material Requirements

Material Test	Requirement	Standard
Liquid limit	25 maximum	ASTM D4318
Plasticity Index	4 maximum	ASTM D4318
Soundness of Aggregates by Use of Sodium Sulfate **or** Magnesium Sulfate	Loss after 5 cycles: 10% maximum using Sodium sulfate - or - 15% maximum using magnesium sulfate	ASTM C88
Clay lumps and friable particles	0.3% maximum	ASTM C142
Sand equivalent	45 minimum	ASTM D2419
Natural Sand	0% to 15% maximum by weight of total aggregate	ASTM D1073

c. Sampling. ASTM D75 shall be used in sampling coarse and fine aggregate.

401-2.2 Mineral filler. Mineral filler (baghouse fines) may be added in addition to material naturally present in the aggregate. Mineral filler shall meet the requirements of ASTM D242.

Mineral Filler Requirements

Material Test	Requirement	Standard
Plasticity Index	4 maximum	ASTM D4318

401-2.3 Asphalt binder. Asphalt binder shall conform to ASTM D6373 Performance Grade (PG) 76-22.

Asphalt Binder PG Plus Test Requirements

Material Test	Requirement	Standard
Elastic Recovery	75% minimum	ASTM D6084[1]

[1] Follow Procedure B on RTFO aged binder.

.401-2.4 Anti-stripping agent. Any anti-stripping agent or additive (anti-strip) shall be heat stable and shall not change the asphalt binder grade beyond Specifications. Anti-strip shall be an approved material of the Department of Transportation of the State in which the Project is located.

COMPOSITION

401-3.1 Composition of mixture(s). The asphalt mix shall be composed of a mixture of aggregates, filler and anti-strip agent if required, and asphalt binder. The aggregate fractions shall be sized, handled in separate size groups, and combined in such proportions that the resulting mixture meets the grading requirements of the job mix formula (JMF).

401-3.2 Job mix formula (JMF) laboratory. The laboratory used to develop the JMF shall possess a current certificate of accreditation, listing D3666 from a national accrediting authority and all test methods required for developing the JMF; and be listed on the accrediting authority's website. A copy of the laboratory's current accreditation and accredited test methods shall be submitted to the Resident Project Representative (RPR) prior to start of construction.

401-3.3 Job mix formula (JMF). No asphalt mixture shall be placed until an acceptable mix design has been submitted to the RPR for review and accepted in writing. The RPR's review shall not relieve Contractor of the responsibility to select and proportion the materials to comply with this Section.

When the Project requires asphalt mixtures of differing aggregate gradations and/or binders, a separate JMF shall be submitted for each mix. Add anti-stripping agent to meet tensile strength requirements.

The JMF shall be prepared by an accredited laboratory that meets the requirements of Paragraph 401-3.2. The asphalt mixture shall be designed using procedures contained in Asphalt Institute MS-2 Mix Design Manual, 7th Edition. Samples shall be prepared and compacted using the gyratory compactor in accordance with ASTM D6925.

Should a change in sources of materials be made, a new JMF must be submitted to the RPR for review and accepted in writing before the new material is used. After the initial production JMF has been approved by the RPR and a new or modified JMF is required for whatever reason, the subsequent cost of the new or modified JMF, including a new control strip when required by the RPR, will be borne by Contractor.

The RPR may request samples at any time for testing, prior to and during production, to verify the quality of the materials and to ensure conformance with the applicable specifications.

The JMF shall be submitted in writing by Contractor at least 30 days prior to the start of paving operations. The JMF shall be developed within the same construction season using aggregates proposed for Project use.

The JMF shall be dated, and stamped or sealed by the responsible professional Engineer of the laboratory and shall include the following items as a minimum:

- Manufacturer's Certificate of Analysis (COA) for the asphalt binder used in the JMF in accordance with Paragraph 401-2.3. Certificate of asphalt performance grade is with modifier already added, if used and must indicate compliance with ASTM D6373. For plant modified asphalt binder, certified test report indicating grade certification of modified asphalt binder.
- Manufacturer's Certificate of Analysis (COA) for the anti-stripping agent if used in the JMF in accordance with Paragraph 401-2.4.
- Certified material test reports for the course and fine aggregate and mineral filler in accordance with Paragraphs 401-2.1.
- Percent passing each sieve size for individual gradation of each aggregate cold feed and/or hot bin; percent by weight of each cold feed and/or hot bin used; and the total combined gradation in the JMF.
- Specific Gravity and absorption of each coarse and fine aggregate.
- Percent natural sand.

- Percent fractured faces.
- Percent by weight of flat particles, elongated particles, and flat and elongated particles (and criteria).
- Percent of asphalt.
- Number of blows or gyrations
- Laboratory mixing and compaction temperatures.
- Supplier-recommended field mixing and compaction temperatures.
- Plot of the combined gradation on a 0.45 power gradation curve.
- Graphical plots of air voids, voids in the mineral aggregate (VMA), and unit weight versus asphalt content. To achieve minimum VMA during production, the mix design needs to account for material breakdown during production.
- Tensile Strength Ratio (TSR).
- Type and amount of Anti-strip agent when used.
- Asphalt Pavement Analyzer (APA) results.
- Date the JMF was developed. Mix designs that are not dated or which are from a prior construction season shall not be accepted.

Table 1. Asphalt Design Criteria

Test Property	Value	Test Method
Number of blows or gyrations	75	
Air voids (%)	3.5	ASTM D3203
Percent voids in mineral aggregate (VMA), minimum	See Table 2	ASTM D6995
Tensile Strength Ratio (TSR)[1]	not less than 80 at a saturation of 70-80%	ASTM D4867
Asphalt Pavement Analyzer (APA)[2]	Less than 10 mm @ 4000 passes	AASHTO T340 at 250 psi hose pressure at 64°C test temperature

[1] Test specimens for TSR shall be compacted at 7 ± 1.0 % air voids. In areas subject to freeze-thaw, use freeze-thaw conditioning in lieu of moisture conditioning per ASTM D4867.

[2] AASHTO T340 at 100 psi hose pressure at 64°C test temperature may be used in the interim. If this method is used the required Value shall be less than 5 mm @ 8000 passes.

The mineral aggregate shall be of such size that the percentage composition by weight, as determined by laboratory sieves, will conform to the gradation or gradations specified in Table 2 when tested in accordance with ASTM C136 and ASTM C117.

The gradations in Table 2 represent the limits that shall determine the suitability of aggregate for use from the sources of supply; be well graded from coarse to fine and shall not vary from the low limit on one sieve to the high limit on the adjacent sieve, or vice versa.

Table 2. Aggregate - Asphalt Pavements

Sieve Size	Percentage by Weight Passing Sieve
1 inch	--
3/4 inch	100
1/2 inch	90-100
3/8 inch	72-88
No. 4	53-73
No. 8	38-60
No. 16	26-48
No. 30	18-38
No. 50	11-27
No. 100	6-18
No. 200	3-6
Minimum Voids in Mineral Aggregate (VMA)[1]	15.0
Asphalt Percent:	
Stone or gravel	5.0-7.5
Recommended Minimum Construction Lift Thickness	2 inches

[1]To achieve minimum VMA during production, the mix design needs to account for material breakdown during production.

The aggregate gradations shown are based on aggregates of uniform specific gravity. The percentages passing the various sieves shall be corrected when aggregates of varying specific gravities are used, as indicated in the Asphalt Institute MS-2 Mix Design Manual, 7th Edition.

401-3.4 Reclaimed asphalt pavement (RAP). RAP shall not be used.

401-3.5 Control Strip. Full production shall not begin until an acceptable control strip has been constructed and accepted in writing by the RPR**.** Contractor shall prepare and place a quantity of asphalt according to the JMF. The underlying grade or pavement structure upon which the control strip is to be constructed shall be the same as the remainder of the course represented by the control strip.

Contractor will not be allowed to place the control strip until Contractor quality control program (CQCP), showing conformance with the requirements of Paragraph 401-5.1, has been accepted, in writing, by Engineer.

The control strip will consist of at least 250 tons or 1/2 sublot, whichever is greater. The control strip shall be placed in two lanes of the same width and depth to be used in production with a longitudinal cold joint. The cold joint must be cut back in accordance with Paragraph 401-4.14 using the same procedure that will be used during production. The cold joint for the control strip will be an exposed construction joint at least four (4) hours old or when the mat has cooled to less than 160°F. The equipment used in construction of the control strip shall be the same type, configuration, and weight to be used on the Project.

The control strip will be considered acceptable by the RPR if the gradation, asphalt content, and VMA are within the action limits specified in Paragraph 401-5.5a; and Mat density, air voids, and joint density meet the requirements specified in Paragraphs 401-6.2.

If the control strip is unacceptable, necessary adjustments to the JMF, plant operation, placing procedures, and/or rolling procedures shall be made and another control strip shall be placed. Unacceptable control strips shall be removed at Contractor's expense.

Payment will only be made for an acceptable control strip in accordance with Paragraph 401-8.1 using a lot pay factor equal to 100.

CONSTRUCTION METHODS

401-4.1 Weather limitations. The asphalt shall not be placed upon a wet surface or when the surface temperature of the underlying course is less than specified in Table 4. The temperature requirements may be waived by the RPR, if requested; however, all other requirements including compaction shall be met.

Table 4. Surface Temperature Limitations of Underlying Course

Mat Thickness	Base Temperature (Minimum)	
	°F	°C
3 inches or greater	40 [1]	4
Greater than 2 inches but less than 3 inches	45	7

401-4.2 Asphalt plant. Plants used for the preparation of asphalt shall conform to the requirements of American Association of State Highway and Transportation Officials (AASHTO) M156 including the following items.

a. Inspection of plant. The RPR, or RPR's authorized representative, shall have access, at all times, to all areas of the plant for checking adequacy of equipment; inspecting operation of the plant: verifying weights, proportions, and material properties; and checking the temperatures maintained in the preparation of the mixtures.

b. Storage bins and surge bins. The asphalt mixture stored in storage and/or surge bins shall meet the same requirements as asphalt mixture loaded directly into trucks. Asphalt mixture shall not be stored in storage and/or surge bins for a period greater than twelve (12) hours. If the RPR determines there is an excessive heat loss, segregation, or oxidation of the asphalt mixture due to temporary storage, temporary storage shall not be allowed.

401-4.3 Aggregate stockpile management. Aggregate stockpiles shall be constructed in a manner that prevents segregation and intermixing of deleterious materials. Aggregates from different sources shall be stockpiled, weighed, and batched separately at the asphalt batch plant. Aggregates that have become segregated or mixed with earth or foreign material shall not be used.

A continuous supply of materials shall be provided to the work to ensure continuous placement.

401-4.4 Hauling equipment. Trucks used for hauling asphalt shall have tight, clean, and smooth metal beds. To prevent the asphalt from sticking to the truck beds, the truck beds shall be lightly coated with a minimum amount of paraffin oil, lime solution, or other material approved by the RPR. Petroleum products shall not be used for coating truck beds. Each truck shall have a suitable cover to protect the mixture from adverse weather. When necessary, to ensure that the mixture will be delivered to the site at the specified temperature, truck beds shall be insulated or heated, and covers shall be securely fastened.

401-4.4.1 Material transfer vehicle (MTV). Material transfer vehicles used to transfer the material from the hauling equipment to the paver, shall use a self-propelled, material transfer vehicle with a swing conveyor that can deliver material to the paver without making contact with the paver. The MTV shall be able to move back and forth between the hauling equipment and the paver providing material transfer to the paver, while allowing the paver to operate at a constant speed. The Material Transfer Vehicle will have remixing and storage capability to prevent physical and thermal segregation.

401-4.5 Asphalt pavers. Asphalt pavers shall be self-propelled with an activated heated screed, capable of spreading and finishing courses of asphalt that will meet the specified thickness, smoothness, and grade. The paver shall have sufficient power to propel itself and the hauling equipment without adversely affecting the finished surface. The asphalt paver shall be equipped with a control system capable of automatically maintaining the specified screed grade and elevation.

If the spreading and finishing equipment in use leaves tracks or indented areas or produces other blemishes in the pavement that are not satisfactorily corrected by the scheduled operations, the use of such equipment shall be discontinued.

The paver shall be capable of paving to a minimum width specified in Paragraph 401-4.12.

401-4.6 Rollers. The number, type, and weight of rollers shall be sufficient to compact the asphalt to the required density while it is still in a workable condition without crushing of the aggregate, depressions, or other damage to the pavement surface. Rollers shall be in good condition, clean, and capable of operating at slow speeds to avoid displacement of the asphalt. All rollers shall be specifically designed and suitable for compacting asphalt concrete and shall be properly used. Rollers that impair the stability of any layer of a pavement structure or underlying soils shall not be used.

401-4.7 Density device. Contractor shall have on site a density gauge during all paving operations in order to assist in the determination of the optimum rolling pattern, type of roller and frequencies, as well as to monitor the effect of the rolling operations during production paving. Contractor shall supply a qualified technician during all paving operations to calibrate the gauge and obtain accurate density readings for all new asphalt. These densities shall be supplied to the RPR upon request at any time during construction. No separate payment will be made for supplying the density gauge and technician.

401-4.8 Preparation of asphalt binder. The asphalt binder shall be heated in a manner that will avoid local overheating and provide a continuous supply of the asphalt binder to the mixer at a uniform temperature. The temperature of unmodified asphalt binder delivered to the mixer shall be sufficient to provide a suitable viscosity for adequate coating of the aggregate particles but shall not exceed 325°F when added to the aggregate. The temperature of modified asphalt binder shall be no more than 350°F when added to the aggregate.

401-4.9 Preparation of mineral aggregate. The aggregate for the asphalt shall be heated and dried. The maximum temperature and rate of heating shall be such that no damage occurs to the aggregates. The temperature of the aggregate and mineral filler shall not exceed 350°F when the asphalt binder is added. Particular care shall be taken that aggregates high in calcium or magnesium content are not damaged by overheating. The temperature shall not be lower than is required to obtain complete coating and uniform distribution on the aggregate particles and to provide a mixture of satisfactory workability.

401-4.10 Preparation of Asphalt mixture. The aggregates and the asphalt binder shall be weighed or metered and mixed in the amount specified by the JMF. The combined materials shall be mixed until the aggregate obtains a uniform coating of asphalt binder and is thoroughly distributed throughout the mixture. Wet mixing time shall be the shortest time that will produce a satisfactory mixture, but not less than 25 seconds for batch plants. The wet mixing time for all plants shall be established by the Contractor, based on the procedure for determining the percentage of coated particles described in ASTM D2489, for each individual plant and for each type of aggregate used. The wet mixing time will be set to achieve 95% of coated particles. For continuous mix plants, the minimum mixing time shall be determined by dividing the

weight of its contents at operating level by the weight of the mixture delivered per second by the mixer. The moisture content of all asphalt upon discharge shall not exceed 0.5%.

401-4.11 Application of Tack Coat to underlying asphalt course. Immediately before placing the asphalt mixture, the underlying course shall be cleaned of all dust and debris.

A tack coat shall be applied in accordance with Item P-603 to all vertical and horizontal asphalt and concrete surfaces prior to placement of the first and each subsequent lift of asphalt mixture.

401-4.12 Laydown plan, transporting, placing, and finishing. Prior to the placement of the asphalt, Contractor shall prepare a laydown plan with the sequence of paving lanes and width to minimize the number of cold joints; the location of any temporary ramps; laydown temperature; and estimated time of completion for each portion of the Work (milling, paving, rolling, cooling, etc.). The laydown plan and any modifications shall be approved by the RPR.

Deliveries shall be scheduled so that placing and compacting of asphalt is uniform with minimum stopping and starting of the paver. Hauling over freshly placed material shall not be permitted until the material has been compacted, as specified, and allowed to cool to approximately ambient temperature. Contractor, at their expense, shall be responsible for repair of any damage to the pavement caused by hauling operations.

Contractor shall survey each lift of asphalt surface course and certify to RPR that every lot of each lift meets the grade tolerances of Paragraph 401-6.2d before the next lift can be placed.

Edges of existing asphalt pavement abutting the new work shall be saw cut and the cut off material and laitance removed. Apply a tack coat in accordance with Item P-603 before new asphalt material is placed against it.

The speed of the paver shall be regulated to eliminate pulling and tearing of the asphalt mat. Placement of the asphalt mix shall begin along the centerline of a crowned section or on the high side of areas with a one way slope unless shown otherwise on the laydown plan as accepted by the RPR. The asphalt mix shall be placed in consecutive adjacent lanes having a minimum width of **10** feet except where edge lanes require less width to complete the area. Additional screed sections attached to widen the paver to meet the minimum lane width requirements must include additional auger sections to move the asphalt mixture uniformly along the screed extension.

The longitudinal joint in one course shall offset the longitudinal joint in the course immediately below by at least 1 foot; however, the joint in the surface top course shall be at the centerline of crowned pavements. Transverse joints in one course shall be offset by at least 10 feet from transverse joints in the previous course. Transverse joints in adjacent lanes shall be offset a minimum of 10 feet.On areas where irregularities or unavoidable obstacles make the use of mechanical spreading and finishing equipment impractical, the asphalt may be spread and luted by hand tools.

The RPR may at any time, reject any batch of asphalt, on the truck or placed in the mat, which is rendered unfit for use due to contamination, segregation, incomplete coating of aggregate, or overheated asphalt mixture. Such rejection may be based on only visual inspection or temperature measurements. In the event of such rejection, Contractor may take a representative sample of the rejected material in the presence of the RPR, and if it can be demonstrated in the laboratory, in the presence of the RPR, that such material was erroneously rejected, payment will be made for the material at the contract unit price.

Areas of segregation in the surface course, as determined by the RPR, shall be removed, and replaced at Contractor’s expense. The area shall be removed by saw cutting and milling a minimum of the construction lift thickness as specified in Paragraph 401-3.3, Table 2 for the approved mix design. The area to be removed and replaced shall be a minimum width of the paver and a minimum of 10 feet long.

401-4.13 Compaction of asphalt mixture. After placing, the asphalt mixture shall be thoroughly and uniformly compacted by self-propelled rollers. The surface shall be compacted as soon as possible when the asphalt has attained sufficient stability so that the rolling does not cause undue displacement, cracking,

or shoving. The sequence of rolling operations and the type of rollers used shall be at the discretion of Contractor. The speed of the roller shall, at all times, be sufficiently slow to avoid displacement of the hot mixture and be effective in compaction. Any surface defects and/or displacement occurring as a result of the roller, or from any other cause, shall be corrected at Contractor's expense.

Sufficient rollers shall be furnished to handle the output of the plant. Rolling shall continue until the surface is of uniform texture, true to grade and cross-section, and the required field density is obtained. To prevent adhesion of the asphalt to the roller, the wheels shall be equipped with a scraper and kept moistened with water, as necessary.

In areas not accessible to the roller, the mixture shall be thoroughly compacted with approved power tampers.

Any asphalt that becomes loose and broken, mixed with dirt, contains check-cracking, or in any way defective shall be removed and replaced with fresh hot mixture and immediately compacted to conform to the surrounding area. This Work shall be done at Contractor's expense. Skin patching shall not be allowed.

401-4.14 Joints. The formation of all joints shall be made to ensure a continuous bond between the courses and obtain the required density. All joints shall have the same texture as other sections of the course and meet the requirements for smoothness and grade.

The roller shall not pass over the unprotected end of the freshly laid asphalt except when necessary to form a transverse joint. When necessary to form a transverse joint, it shall be made by means of placing a bulkhead or by tapering the course. The tapered edge shall be cut back to its full depth and width on a straight line to expose a vertical face prior to placing the adjacent lane. In both methods, all contact surfaces shall be coated with an asphalt tack coat before placing any fresh asphalt against the joint.

Longitudinal joints which have been left exposed for more than four (4) hours; the surface temperature has cooled to less than 175°F; or are irregular, damaged, uncompacted or otherwise defective shall be cut back with a cutting wheel or pavement saw a maximum of 3 inches to expose a clean, sound, uniform vertical surface for the full depth of the course. All cutback material and any laitance produced from cutting joints shall be removed from the Project. Asphalt tack coat in accordance with Item P-603 shall be applied to the clean, dry joint prior to placing any additional fresh asphalt against the joint. The cost of this cold joint work shall be considered incidental to the cost of the asphalt.

401-4.15 Saw-cut grooving. Saw-cut grooving is not required.

401-4.16 Diamond grinding. Diamond grinding shall be completed prior to pavement grooving. Diamond grinding shall be accomplished by sawing with saw blades impregnated with industrial diamond abrasive.

Diamond grinding shall be performed with a machine designed specifically for diamond grinding capable of cutting a path at least 3 feet wide. The saw blades shall be 1/8-inch wide with a sufficient number of blades to create grooves between 0.090 and 0.130 inches wide; and peaks and ridges approximately 1/32 inch higher than the bottom of the grinding cut. The actual number of blades will be determined by Contractor and depend on the hardness of the aggregate. Equipment or grinding procedures that cause ravels, aggregate fractures, spalls, or disturbance to the pavement will not be permitted. Contractor shall demonstrate to the RPR that the grinding equipment will produce satisfactory results prior to making corrections to surfaces. Grinding will be tapered in all directions to provide smooth transitions to areas not requiring grinding. The slurry resulting from the grinding operation shall be continuously removed and the pavement left in a clean condition. Contractor shall apply a surface treatment per Item P-608 to all areas that have been subject to grinding.

401-4.17 Nighttime paving requirements. Contractor shall provide adequate lighting during any nighttime construction. A lighting plan shall be submitted by Contractor and approved by the RPR prior to the start of any nighttime work. All Work shall be in accordance with the approved CSPP and lighting plan.

CONTRACTOR QUALITY CONTROL (CQC)

401-5.1 General. Contractor shall develop a Contractor Quality Control Program (CQCP) in accordance with Item C-100. No partial payment will be made for materials without an approved CQCP.

401-5.2 Contractor quality control (QC) facilities. Contractor shall provide or contract for testing facilities in accordance with Item C-100. The RPR shall be permitted unrestricted access to inspect Contractor's QC facilities and witness QC activities. The RPR will advise Contractor in writing of any noted deficiencies concerning the QC facility, equipment, supplies, or testing personnel and procedures. When the deficiencies are serious enough to be adversely affecting the test results, the incorporation of the materials into the Work shall be suspended immediately and will not be permitted to resume until the deficiencies are satisfactorily corrected.

401-5.3 Contractor QC testing. Contractor shall perform all QC tests necessary to control the production and construction processes applicable to these specifications and as set forth in the approved CQCP. The testing program shall include, but not necessarily be limited to, tests for the control of asphalt content, aggregate gradation, temperatures, aggregate moisture, field compaction, and surface smoothness. A QC Testing Plan shall be developed as part of the CQCP.

a. Asphalt content. A minimum of two tests shall be performed per day in accordance with ASTM D6307 or ASTM D2172 for determination of asphalt content. When using ASTM D6307, the correction factor shall be determined as part of the first test performed at the beginning of plant production; and as part of every tenth test performed thereafter. The asphalt content for the day will be determined by averaging the test results.

b. Gradation. Aggregate gradations shall be determined a minimum of twice per day from mechanical analysis of extracted aggregate in accordance with ASTM D5444, ASTM C136, and ASTM C117.

c. Moisture content of aggregate. The moisture content of aggregate used for production shall be determined a minimum of once per day in accordance with ASTM C566.

d. Moisture content of asphalt. The moisture content shall be determined once per day in accordance with AASHTO T329 or ASTM D1461.

e. Temperatures. Temperatures shall be checked, at least four times per day, at necessary locations to determine the temperatures of the dryer, the asphalt binder in the storage tank, the asphalt at the plant, and the asphalt at the job site.

f. In-place density monitoring. Contractor shall conduct any necessary testing to ensure that the specified density is being achieved. A nuclear gauge may be used to monitor the pavement density in accordance with ASTM D2950.

g. Smoothness for Contractor Quality Control.

Contractor shall perform smoothness testing in transverse and longitudinal directions daily to verify that the construction processes are producing pavement with variances less than 1/4 inch in 12 feet, identifying areas that may pond water which could lead to hydroplaning of aircraft. If the smoothness criteria is not met, appropriate changes and corrections to the construction process shall be made by Contractor before construction continues

Contractor may use a 12-foot straightedge or a rolling inclinometer meeting the requirements of ASTM E2133. Straight-edge testing shall start with one-half the length of the straightedge at the edge of pavement section being tested and then moved ahead one-half the length of the straightedge for each successive measurement. Testing shall be continuous across all joints. The surface irregularity shall be determined by placing the freestanding (unleveled) straightedge on the pavement surface and allowing it to rest upon the two highest spots covered by its length and measuring the maximum gap between the straightedge and the pavement surface in the area between the two high points. If the rolling inclinometer

is used, the data may be evaluated using the FAA profile program, ProFAA, using the 12-foot straightedge simulation function.

Smoothness readings shall not be made across grade changes or cross slope transitions. The transition between new and existing pavement shall be evaluated separately for conformance with the Plans.

(1) Transverse measurements. Transverse measurements shall be taken for each day's production placed. Transverse measurements shall be taken perpendicular to the pavement centerline each 50 feet or more often as determined by the RPR. The joint between lanes shall be tested separately to facilitate smoothness between lanes.

(2) Longitudinal measurements. Longitudinal measurements shall be taken for each day's production placed. Longitudinal tests shall be parallel to the centerline of paving; at the center of paving lanes when widths of paving lanes are less than 20 feet; and at the third points of paving lanes when widths of paving lanes are 20 feet or greater.

Deviations on the final surface course in either the transverse or longitudinal direction that will trap water greater than 1/4 inch shall be corrected with diamond grinding per Paragraph 401-4.16 or by removing and replacing the surface course to full depth. Grinding shall be tapered in all directions to provide smooth transitions to areas not requiring grinding. All areas in which diamond grinding has been performed shall be subject to the final pavement thickness tolerances specified in Paragraph 401-6.1d(3). Areas that have been ground shall be sealed with a surface treatment in accordance with Item P-608. To avoid the surface treatment creating any conflict with runway or taxiway markings, it may be necessary to seal a larger area.

Control charts shall be kept to show area of each day's placement and the percentage of corrective grinding required. Corrections to production and placement shall be initiated when corrective grinding is required. If Contractor's machines and/or methods produce significant areas that need corrective actions in excess of 10 percent of a day's production, production shall be stopped until corrective measures are implemented by Contractor.

h. Grade. Grade shall be evaluated daily to allow adjustments to paving operations when grade measurements do not meet Specifications. As a minimum, grade shall be evaluated prior to and after the placement of the first lift and after placement of the surface lift.

Measurements will be taken at appropriate gradelines (as a minimum at center and edges of paving lane) and longitudinal spacing as shown on cross-sections and Plans. The final surface of the pavement will not vary from the gradeline elevations and cross-sections shown on the Plans by more than 1/2 inch vertically and 0.1 feet laterally. The documentation will be provided by Contractor to the RPR by the end of the following working day.

Areas with humps or depressions that exceed grade or smoothness criteria and that retain water on the surface must be ground off provided the course thickness after grinding is not more than 1/2 inch less than the thickness specified on the plans. Grinding shall be in accordance with Paragraph 401-4.16.

Contractor shall repair low areas or areas that cannot be corrected by grinding by removal of deficient areas to the depth of the final course plus 1/2 inch and replacing with new material. Skin patching is not allowed.

401-5.4 Sampling. When directed by the RPR, Contractor shall sample and test any material that appears inconsistent with similar material being sampled, unless such material is voluntarily removed and replaced, or deficiencies corrected by Contractor. All sampling shall be in accordance with standard procedures specified.

401-5.5 Control charts. Contractor shall maintain linear control charts for both individual measurements and range (i.e. difference between highest and lowest measurements) for aggregate gradation, asphalt content, and VMA. The VMA for each day will be calculated and monitored by the QC laboratory.

Control charts shall be posted in a location satisfactory to the RPR and kept current. As a minimum, the control charts shall identify the project number, the contract item number, the test number, each test parameter, the Action and Suspension Limits applicable to each test parameter, and Contractor's test results. Contractor shall use the control charts as part of a process control system for identifying potential problems and assignable causes before they occur. If Contractor's projected data during production indicates a problem and Contractor is not taking satisfactory corrective action, the RPR may suspend production or acceptance of the material.

a. Individual measurements. Control charts for individual measurements shall be established to maintain process control within tolerance for aggregate gradation, asphalt content, and VMA. The control charts shall use the job mix formula target values as indicators of central tendency for the following test parameters with associated Action and Suspension Limits:

Control Chart Limits for Individual Measurements

Sieve	Action Limit	Suspension Limit
3/4 inch	±6%	±9%
1/2 inch	±6%	±9%
3/8 inch	±6%	±9%
No. 4	±6%	±9%
No. 16	±5%	±7.5%
No. 50	±3%	±4.5%
No. 200	±2%	±3%
Asphalt Content	±0.45%	±0.70%
Minimum VMA	-0.5%	-1.0%

b. Range. Control charts shall be established to control gradation process variability. The range shall be plotted as the difference between the two test results for each control parameter. The Suspension Limits specified below are based on a sample size of n = 2. Should Contractor elect to perform more than two tests per lot, the Suspension Limits shall be adjusted by multiplying the Suspension Limit by 1.18 for n = 3 and by 1.27 for n = 4.

Control Chart Limits Based on Range

Sieve	Suspension Limit
1/2 inch	11%
3/8 inch	11%
No. 4	11%
No. 16	9%
No. 50	6%
No. 200	3.5%
Asphalt Content	0.8%

c. Corrective Action. The CQCP shall indicate that appropriate action shall be taken when the process is believed to be out of tolerance. The Plan shall contain rules to gauge when a process is out of control and detail what action will be taken to bring the process into control. As a minimum, a process shall be deemed out of control and production stopped and corrective action taken, if:

(1) One point falls outside the Suspension Limit line for individual measurements or range; or

(2) Two points in a row fall outside the Action Limit line for individual measurements.

401-5.6 QC reports. Contractor shall maintain records and shall submit reports of QC activities daily, in accordance with Item C-100.

MATERIAL ACCEPTANCE

401-6.1 Acceptance sampling and testing. Unless otherwise specified, all acceptance sampling and testing necessary to determine conformance with the requirements specified in this Section will be performed by the RPR at no cost to Contractor except that coring as required in this section shall be completed and paid for by Contractor.

a. Quality assurance (QA) testing laboratory. The QA testing laboratory performing these acceptance tests will be accredited in accordance with ASTM D3666. The QA laboratory accreditation will be current and listed on the accrediting authority's website. All test methods required for acceptance sampling and testing will be listed on the lab accreditation.

b. Lot size. A standard lot will be equal to one day's production divided into approximately equal sublots of between 400 to 600 tons. When only one or two sublots are produced in a day's production, the sublots will be combined with the production lot from the previous or next day.

Where more than one plant is simultaneously producing asphalt for the job, the lot sizes will apply separately for each plant.

c. Asphalt air voids. Plant-produced asphalt will be tested for air voids on a sublot basis.

(1) Sampling. Material from each sublot shall be sampled in accordance with ASTM D3665. Samples shall be taken from material deposited into trucks at the plant or at the job site in accordance with ASTM D979. The sample of asphalt may be put in a covered metal tin and placed in an oven for not less than 30 minutes nor more than 60 minutes to maintain the material at or above the compaction temperature as specified in the JMF.

(2) Testing. Air voids will be determined for each sublot in accordance with ASTM D3203 for a set of compacted specimens prepared in accordance with ASTM D6925.

d. In-place asphalt mat and joint density. Each sublot will be tested for in-place mat and joint density as a percentage of the theoretical maximum density (TMD).

(1) Sampling. Contractor will cut minimum 5 inch diameter samples in accordance with ASTM D5361. Contractor shall furnish all tools, labor, and materials for cleaning, and filling the cored pavement. Laitance produced by the coring operation shall be removed immediately after coring, and core holes shall be filled within one day after sampling in a manner acceptable to the RPR.

(2) Bond. Each lift of asphalt shall be bonded to the underlying layer. If cores reveal that the surface is not bonded, additional cores shall be taken as directed by the RPR to determine the extent of unbonded areas. Unbonded areas shall be removed by milling and replaced at no additional cost as directed by the RPR.

(3) Thickness. Thickness of each lift of surface course will be evaluated by the RPR for compliance to the requirements shown on the Plans after any necessary corrections for grade. Measurements of thickness will be made using the cores extracted for each sublot for density measurement. The maximum

allowable deficiency at any point will not be more than 1/4 inch less than the thickness indicated for the lift. Average thickness of lift, or combined lifts, will not be less than the indicated thickness. Where the thickness tolerances are not met, the lot or sublot shall be corrected by Contractor at his expense by removing the deficient area and replacing with new pavement. Contractor, at his expense, may take additional cores as approved by the RPR to circumscribe the deficient area.

(4) Mat density. One core shall be taken from each sublot. Core locations will be determined by the RPR in accordance with ASTM D3665. Cores for mat density shall not be taken closer than one foot from a transverse or longitudinal joint. The bulk specific gravity of each cored sample will be determined in accordance with ASTM D2726. The percent compaction (density) of each sample will be determined by dividing the bulk specific gravity of each sublot sample by the TMD for that sublot.

(5) Joint density. One core centered over the longitudinal joint shall be taken for each sublot that has a longitudinal joint. Core locations will be determined by the RPR in accordance with ASTM D3665. The bulk specific gravity of each core sample will be determined in accordance with ASTM D2726. The percent compaction (density) of each sample will be determined by dividing the bulk specific gravity of each joint density sample by the average TMD for the lot. The TMD used to determine the joint density at joints formed between lots will be the lower of the average TMD values from the adjacent lots.

401-6.2 Acceptance criteria.

a. General. Acceptance will be based on the implementation of the Contractor Quality Control Program (CQCP) and the following characteristics of the asphalt and completed pavements: air voids, mat density, joint density, grade.

b. Air Voids and Mat density. Acceptance of each lot of plant produced material for mat density and air voids will be based on the percentage of material within specification limits (PWL). If the PWL of the lot equals or exceeds 90%, the lot will be acceptable. Acceptance and payment will be determined in accordance with Paragraph 401-8.1.

c. Joint density. Acceptance of each lot of plant produced asphalt for joint density will be based on the PWL. If the PWL of the lot is equal to or exceeds 90%, the lot will be considered acceptable. If the PWL is less than 90%, Contractor shall evaluate the reason and act accordingly. If the PWL is less than 80%, Contractor shall cease operations and until the reason for poor compaction has been determined. If the PWL is less than 71%, the pay factor for the lot used to complete the joint will be reduced by five (5) percentage points. This lot pay factor reduction will be incorporated and evaluated in accordance with Paragraph 401-8.1.

d. Grade. The final finished surface of the pavement shall be surveyed to verify that the grade elevations and cross-sections shown on the Plans do not deviate more than 1/2 inch vertically or 0.1 feet laterally.

Cross-sections of the pavement shall be taken at a minimum 50-foot longitudinal spacing and at all longitudinal grade breaks. Minimum cross-section grade points shall include grade at centerline, and edge of pavement.

The survey and documentation shall be stamped and signed by a licensed surveyor. Payment for sublots that do not meet grade for over 25% of the sublot shall not be more than 95%.

e. Profilograph roughness for QA Acceptance. Not Used.

401-6.3 Percentage of material within specification limits (PWL). The PWL will be determined in accordance with procedures specified in Item C-110. The Specification tolerance limits (L) for lower and (U) for upper are contained in Table 5.

Table 5. Acceptance Limits for Air Voids and Density

Test Property	Pavements Specification Tolerance Limits	
	L	**U**
Air Voids Total Mix (%)	2.0	5.0
Surface Course Mat Density (%)	92.8	-
Base Course Mat Density (%)	91.8	-
Joint density (%)	90.5	--

a. Outliers. All individual tests for mat density and air voids will be checked for outliers (test criterion) in accordance with ASTM E178, at a significance level of 5%. Outliers will be discarded, and the PWL will be determined using the remaining test values. The criteria in Table 5 is based on production processes which have a variability with the following standard deviations: Surface Course Mat Density (%), 1.20; Base Course Mat Density (%), 1.55; Joint Density (%), 1.8.

The Contractor should note that (1) 90 PWL is achieved when consistently producing a surface course with an average mat density of at least 94% with 1.20% or less variability, (2) 90 PWL is achieved when consistently producing a base course with an average mat density of at least 93.5% with 1.8% or less variability, and (3) 90 PWL is achieved when consistently producing joints with an average joint density of at least 91% with 1.8% or less variability.

401-6.4 Resampling pavement for mat density.

a. General. Resampling of a lot of pavement will only be allowed for mat density, and then, only if the Contractor requests same, in writing, within 48 hours after receiving the written test results from the RPR. A retest will consist of all the sampling and testing procedures contained in Paragraphs 401-6.1d and 401-6.2b. Only one resampling per lot will be permitted.

(1) A redefined PWL will be calculated for the resampled lot. The number of tests used to calculate the redefined PWL will include the initial tests made for that lot plus the retests.

(2) The cost for resampling and retesting shall be borne by Contractor.

b. Payment for resampled lots. The redefined PWL for a resampled lot will be used to calculate the payment for that lot in accordance with Table 6.

c. Outliers. Check for outliers in accordance with ASTM E178, at a significance level of 5%.

METHOD OF MEASUREMENT

401-7.1 Measurement. Asphalt shall be measured by the number of tons of asphalt used in the accepted work. Batch weights or truck scale weights will be used to determine the basis for the tonnage.

BASIS OF PAYMENT

401-8.1 Payment. Payment for a lot of asphalt meeting all acceptance criteria as specified in Paragraph 401-6.2 shall be made based on results of tests for mat density and air voids. Payment for acceptable lots shall be adjusted according to Paragraph 401-8.1c for mat density and air voids; and Paragraph 401-6.2c for joint density, subject to the limitation that:

a. The total Project payment for plant mix asphalt pavement shall not exceed 100% of the product of the contract unit price and the total number of tons of asphalt used in the accepted work.

b. The price shall be compensation for furnishing all materials, for all preparation, mixing, and placing of these materials, and for all labor, equipment, tools, and incidentals necessary to complete the item.

c. Basis of adjusted payment. The pay factor for each individual lot shall be calculated in accordance with Table 6. A pay factor shall be calculated for both mat density and air voids. The lot pay factor shall be the higher of the two values when calculations for both mat density and air voids are 100% or higher. The lot pay factor shall be the product of the two values when only one of the calculations for either mat density or air voids is 100% or higher. The lot pay factor shall be the lower of the two values when calculations for both mat density and air voids are less than 100%. If PWL for joint density is less than 71% then the lot pay factor shall be reduced by 5% but be no higher than 95%.

For each lot accepted, the adjusted contract unit price shall be the product of the lot pay factor for the lot and the contract unit price. Payment shall be subject to the total project payment limitation specified in Paragraph 401-8.1a. Payment in excess of 100% for accepted lots of asphalt shall be used to offset payment for accepted lots of asphalt pavement that achieve a lot pay factor less than 100%.

Payment for sublots which do not meet grade in accordance with Paragraph 401-6.2d after correction for over 25% of the sublot shall be reduced by 5%.

Table 6. Price adjustment schedule[1]

Percentage of material within specification limits (PWL)	Lot pay factor (percent of contract unit price)
96 – 100	106
90 – 95	PWL + 10
75 – 89	0.5 PWL + 55
55 – 74	1.4 PWL – 12
Below 55	Reject [2]

[1] Although it is theoretically possible to achieve a pay factor of 106% for each lot, actual payment above 100% shall be subject to the total project payment limitation specified in Paragraph 401-8.1a.

[2] The lot shall be removed and replaced. However, the RPR may decide to allow the rejected lot to remain. In that case, if the RPR and Contractor agree in writing that the lot shall not be removed, it shall be paid for at 50% of the contract unit price and the total project payment shall be reduced by the amount withheld for the rejected lot.

d. Profilograph Roughness. Not used**.**

401-8.1 Payment.

Payment will be made under:

Item P-401-8.1	Asphalt Surface Course 4-inch thickness, 3-inch max lifts, complete, per ton

REFERENCES

The publications listed below form a part of this Specification to the extent referenced. The publications are referred to within the text by the basic designation only.

ASTM International (ASTM)

ASTM C29	Standard Test Method for Bulk Density ("Unit Weight") and Voids in Aggregate
ASTM C88	Standard Test Method for Soundness of Aggregates by Use of Sodium Sulfate or Magnesium Sulfate
ASTM C117	Standard Test Method for Materials Finer than 75-µm (No. 200) Sieve in Mineral Aggregates by Washing
ASTM C127	Standard Test Method for Density, Relative Density (Specific Gravity) and Absorption of Coarse Aggregate
ASTM C131	Standard Test Method for Resistance to Degradation of Small-Size Coarse Aggregate by Abrasion and Impact in the Los Angeles Machine
ASTM C136	Standard Test Method for Sieve or Screen Analysis of Fine and Coarse Aggregates
ASTM C142	Standard Test Method for Clay Lumps and Friable Particles in Aggregates
ASTM C566	Standard Test Method for Total Evaporable Moisture Content of Aggregate by Drying
ASTM D75	Standard Practice for Sampling Aggregates
ASTM D242	Standard Specification for Mineral Filler for Bituminous Paving Mixtures
ASTM D946	Standard Specification for Penetration-Graded Asphalt Cement for Use in Pavement Construction
ASTM D979	Standard Practice for Sampling Asphalt Paving Mixtures
ASTM D1073	Standard Specification for Fine Aggregate for Asphalt Paving Mixtures
ASTM D1188	Standard Test Method for Bulk Specific Gravity and Density of Compacted Bituminous Mixtures Using Coated Samples
ASTM D2172	Standard Test Method for Quantitative Extraction of Bitumen from Asphalt Paving Mixtures
ASTM D1461	Standard Test Method for Moisture or Volatile Distillates in Asphalt Paving Mixtures
ASTM D2041	Standard Test Method for Theoretical Maximum Specific Gravity and Density of Bituminous Paving Mixtures
ASTM D2419	Standard Test Method for Sand Equivalent Value of Soils and Fine Aggregate
ASTM D2489	Standard Practice for Estimating Degree of Particle Coating of Bituminous-Aggregate Mixtures
ASTM D2726	Standard Test Method for Bulk Specific Gravity and Density of Non-Absorptive Compacted Bituminous Mixtures

ASTM D2950	Standard Test Method for Density of Bituminous Concrete in Place by Nuclear Methods
ASTM D3203	Standard Test Method for Percent Air Voids in Compacted Dense and Open Bituminous Paving Mixtures
ASTM D3381	Standard Specification for Viscosity-Graded Asphalt Cement for Use in Pavement Construction
ASTM D3665	Standard Practice for Random Sampling of Construction Materials
ASTM D3666	Standard Specification for Minimum Requirements for Agencies Testing and Inspecting Road and Paving Materials
ASTM D4318	Standard Test Methods for Liquid Limit, Plastic Limit, and Plasticity Index of Soils
ASTM D4552	Standard Practice for Classifying Hot-Mix Recycling Agents
ASTM D4791	Standard Test Method for Flat Particles, Elongated Particles, or Flat and Elongated Particles in Coarse Aggregate
ASTM D4867	Standard Test Method for Effect of Moisture on Asphalt Concrete Paving Mixtures
ASTM D5361	Standard Practice for Sampling Compacted Asphalt Mixtures for Laboratory Testing
ASTM D5444	Standard Test Method for Mechanical Size Analysis of Extracted Aggregate
ASTM D5821	Standard Test Method for Determining the Percentage of Fractured Particles in Coarse Aggregate
ASTM D6084	Standard Test Method for Elastic Recovery of Bituminous Materials by Ductilometer
ASTM D6307	Standard Test Method for Asphalt Content of Hot Mix Asphalt by Ignition Method
ASTM D6373	Standard Specification for Performance Graded Asphalt Binder
ASTM D6752	Standard Test Method for Bulk Specific Gravity and Density of Compacted Bituminous Mixtures Using Automatic Vacuum Sealing Method
ASTM D6925	Standard Test Method for Preparation and Determination of the Relative Density of Hot Mix Asphalt (HMA) Specimens by Means of the SuperPave Gyratory Compactor.
ASTM D6926	Standard Practice for Preparation of Bituminous Specimens Using Marshall Apparatus
ASTM D6927	Standard Test Method for Marshall Stability and Flow of Bituminous Mixtures
ASTM D6995	Standard Test Method for Determining Field VMA based on the Maximum Specific Gravity of the Mix (Gmm)
ASTM E11	Standard Specification for Woven Wire Test Sieve Cloth and Test Sieves
ASTM E178	Standard Practice for Dealing with Outlying Observations

ASTM E1274	Standard Test Method for Measuring Pavement Roughness Using a Profilograph
ASTM E950	Standard Test Method for Measuring the Longitudinal Profile of Traveled Surfaces with an Accelerometer Established Inertial Profiling Reference
ASTM E2133	Standard Test Method for Using a Rolling Inclinometer to Measure Longitudinal and Transverse Profiles of a Traveled Surface

American Association of State Highway and Transportation Officials (AASHTO)

AASHTO M156	Standard Specification for Requirements for Mixing Plants for Hot-Mixed, Hot-Laid Bituminous Paving Mixtures.
AASHTO T329	Standard Method of Test for Moisture Content of Hot Mix Asphalt (HMA) by Oven Method
AASHTO T324	Standard Method of Test for Hamburg Wheel-Track Testing of Compacted Asphalt Mixtures
AASHTO T 340	Standard Method of Test for Determining the Rutting Susceptibility of Hot Mix Asphalt (APA) Using the Asphalt Pavement Analyzer (APA)

Asphalt Institute (AI)

Asphalt Institute Handbook MS-26, Asphalt Binder

Asphalt Institute MS-2 Mix Design Manual, 7th Edition

AI State Binder Specification Database

Federal Highway Administration (FHWA)

Long Term Pavement Performance Binder Program

Advisory Circulars (AC)

AC 150/5320-6	Airport Pavement Design and Evaluation

FAA Orders

5300.1	Modifications to Agency Airport Design, Construction, and Equipment Standards

Software

FAARFIELD

END OF ITEM P-401

Item P-403 Asphalt Mix Pavement Base Course

DESCRIPTION

403-1.1 This item shall consist of pavement courses composed of mineral aggregate and asphalt binder mixed in a central mixing plant and placed on a prepared course in accordance with these Specifications and shall conform to the lines, grades, thicknesses, and typical cross-sections shown on the Plans. Each course shall be constructed to the depth, typical section, and elevation required by the Plans and shall be rolled, finished, and approved before the placement of the next course.

MATERIALS

403-2.1 Aggregate. Aggregates shall consist of crushed stone, crushed gravel, crushed slag, screenings, natural sand, and mineral filler, as required. The aggregates should have no known history of detrimental pavement staining due to ferrous sulfides, such as pyrite. Coarse aggregate is the material retained on the No. 4 sieve. Fine aggregate is the material passing the No. 4 sieve.

a. Coarse aggregate. Coarse aggregate shall consist of sound, tough, durable particles, free from films of matter that would prevent thorough coating and bonding with the asphalt material and free from organic matter and other deleterious substances. Coarse aggregate material requirements are given in the Table below.

Coarse Aggregate Material Requirements

Material Test	Requirement	Standard
Resistance to Degradation	Loss: 40% maximum for surface, asphalt binder, and leveling course Loss: 50% maximum for base course	ASTM C131
Soundness of Aggregates by Use of Sodium Sulfate **or** Magnesium Sulfate	Loss after 5 cycles: 12% maximum using Sodium sulfate - or - 18% maximum using magnesium sulfate	ASTM C88
Clay lumps and friable particles	0.3% maximum	ASTM C142
Percentage of Fractured Particles	For pavements designed for aircraft gross weights of 60,000 pounds or more: Minimum 75% by weight of particles with at least two fractured faces and 85% with at least one fractured face[1]	ASTM D5821
Flat, Elongated, or Flat and Elongated Particles	8% maximum, by weight, of flat, elongated, or flat and elongated particles with a value of 5:1 [2]	ASTM D4791

[1] The area of each face shall be equal to at least 75% of the smallest mid-sectional area of the piece. When two fractured faces are contiguous, the angle between the planes of fractures shall be at least 30 degrees to count as two fractured faces.

[2] A flat particle is one having a ratio of width to thickness greater than five (5); an elongated particle is one having a ratio of length to width greater than five (5).

b. Fine aggregate. Fine aggregate shall consist of clean, sound, tough, durable, angular shaped particles produced by crushing stone, slag, or gravel and shall be free from coatings of clay, silt, or other objectionable matter. Natural (non-manufactured) sand may be used to obtain the gradation of the aggregate blend or to improve the workability of the mix. Fine aggregate material requirements are listed in the table below.

Fine Aggregate Material Requirements

Material Test	Requirement	Standard
Liquid limit	25 maximum	ASTM D4318
Plasticity Index	4 maximum	ASTM D4318
Soundness of Aggregates by Use of Sodium Sulfate or Magnesium Sulfate	Loss after 5 cycles: 10% maximum using Sodium sulfate - or - 15% maximum using magnesium sulfate	ASTM C88
Clay lumps and friable particles	0.3% maximum	ASTM C142
Sand equivalent	45 minimum	ASTM D2419
Natural Sand	0 to 15% maximum by weight of total aggregate	ASTM D1073

c. Sampling. ASTM D75 shall be used in sampling coarse and fine aggregate, and ASTM C183 shall be used in sampling mineral filler.

403-2.2 Mineral filler. Mineral filler (baghouse fines) may be added in addition to material naturally present in the aggregate. Mineral filler shall meet the requirements of ASTM D242.

Mineral filler Requirements

Material Test	Requirement	Standard
Plasticity Index	4 maximum	ASTM D4318

403-2.3 Asphalt binder. Asphalt binder shall conform to ASTM D6373 Performance Grade (PG) 76-22.

Asphalt Binder PG Plus Test Requirements

Material Test	Requirement	Standard
Elastic Recovery	75% minimum	ASTM D6084

403-2.4 Anti-stripping agent. Any anti-stripping agent or additive (anti-strip) shall be heat stable and shall not change the asphalt binder grade beyond Specifications. Anti-strip shall be an approved material of the Department of Transportation of the State in which the Project is located.

COMPOSITION

403-3.1 Composition of mixture. The asphalt plant mix shall be composed of a mixture of well-graded aggregate, filler and anti-strip agent if required, and asphalt binder. The several aggregate fractions shall be sized, handled in separate size groups, and combined in such proportions that the resulting mixture meets the grading requirements of the job mix formula (JMF).

403-3.2 Job mix formula (JMF) laboratory. The laboratory used to develop the JMF shall possess a current certificate of accreditation, listing D3666 from a national accrediting authority and all test methods required for developing the JMF, and listed on the accrediting authority's website. A copy of the laboratory's current accreditation and accredited test methods shall be submitted to the RPR prior to start of construction.

403-3.3 Job mix formula (JMF). No asphalt mixture shall be placed until an acceptable mix design has been submitted to Engineer for review and accepted in writing. Engineer's review shall not relieve Contractor of the responsibility to select and proportion the materials to comply with this Section.

When the Project requires asphalt mixtures of differing aggregate gradations and/or binders, a separate JMF shall be submitted for each mix. Add anti-stripping agent to meet tensile strength requirements.

The JMF shall be prepared by an accredited laboratory that meets the requirements of Paragraph 403-3.2. The asphalt mixture shall be designed using procedures contained in Asphalt Institute MS-2 Mix Design Manual, 7th Edition. Samples shall be prepared and compacted using the gyratory compactor in accordance with ASTM D6925.

Should a change in sources of materials be made, a new JMF must be submitted to the RPR for review and accepted in writing before the new material is used. After the initial production JMF has been approved by the RPR and a new or modified JMF is required for whatever reason, the subsequent cost of the new or modified JMF, including a new control strip when required by the RPR, will be borne by Contractor.

Engineer may request samples at any time for testing, prior to and during production, to verify the quality of the materials and to ensure conformance with the applicable specifications.

The JMF shall be submitted in writing by Contractor at least 30 days prior to the start of paving operations. The JMF shall be developed within the same construction season using aggregates proposed for Project use.

The submitted JMF shall be dated, and stamped or sealed by the responsible professional Engineer of the laboratory and shall include the following items as a minimum:

- Manufacturer's Certificate of Analysis (COA) for the asphalt binder used in the JMF in accordance with Paragraph 403-2.3. Certificate of asphalt performance grade is with modifier already added, if used and must indicate compliance with ASTM D6373. For plant modified asphalt binder, certified test report indicating grade certification of modified asphalt binder.
- Manufacturer's Certificate of Analysis (COA) for the anti-stripping agent if used in the JMF in accordance with Paragraph 403-2.4.
- Certified material test reports for the course and fine aggregate and mineral filler in accordance with Paragraphs 403-2.1 and 403-2.2.
- Percent passing each sieve size for individual gradation of each aggregate cold feed and/or hot bin; percent by weight of each cold feed and/or hot bin used; and the total combined gradation in the JMF.
- Specific Gravity and absorption of each course and fine aggregate.
- Percent natural sand.
- Percent fractured faces.
- Percent by weight of flat particles**,** elongated particles, and flat and elongated particles (and criteria).
- Percent of asphalt.
- Number of blows or gyrations.
- Laboratory mixing and compaction temperatures.
- Supplier recommended mixing and compaction temperatures.
- Plot of the combined gradation on the 0.45 power gradation curve.
- Graphical plots of air voids, voids in the mineral aggregate (VMA), and unit weight versus asphalt content. To achieve minimum VMA during production, the mix design needs to account for material breakdown during production.
- Tensile Strength Ratio (TSR).
- Type and amount of Anti-strip agent when used.
- Asphalt Pavement Analyzer (APA) results.
- Date the JMF was developed. Mix designs that are not dated or which are from a prior construction season shall not be accepted.

Table 1. Asphalt Design Criteria

Test Property	Value	Test Method
Number of blows/gyrations	75	
Air voids (%)	3.5	ASTM D3203
Percent voids in mineral aggregate (VMA), minimum	See Table 2	ASTM D6995
TSR[1]	not less than 80 at a saturation of 70-80%	ASTM D4867
Asphalt Pavement Analyzer (APA)[2]	Less than 10 mm @ 4,000 passes	AASHTO T340 at 250 psi hose pressure at 64°C test temperature

[1] Test specimens for TSR shall be compacted at 7 ± 1.0 % air voids. In areas subject to freeze-thaw, use freeze-thaw conditioning in lieu of moisture conditioning per ASTM D4867.

[2] AASHTO T340 at 100 psi hose pressure at 64°C test temperature may be used in the interim. If this method is used the required Value shall be less than 5 mm @ 8,000 passes.

The mineral aggregate shall be of such size that the percentage composition by weight, as determined by laboratory sieves, will conform to the gradation or gradations specified in Table 2 when tested in accordance with ASTM C136 and ASTM C117.

The gradations in Table 2 represent the limits that shall determine the suitability of aggregate for use from the sources of supply, be well graded from coarse to fine and shall not vary from the low limit on one sieve to the high limit on the adjacent sieve, or vice versa.

Table 2. Aggregate - Asphalt Pavements

Sieve Size	Percentage by Weight Passing Sieve
1 inch	-
3/4 inch	100
1/2 inch	90-100
3/8 inch	72-88
No. 4	53-73
No. 8	38-60
No. 16	26-48
No. 30	18-38
No. 50	11-27
No. 100	6-18
No. 200	3-6
Voids in Mineral Aggregate (VMA)[1]	15
Asphalt Percent:	
Stone or gravel	5.0-7.5
Recommended Minimum Construction Lift Thickness	2-inch

[1]To achieve minimum VMA during production, the mix design needs to account for material breakdown during production.

The aggregate gradations shown are based on aggregates of uniform specific gravity. The percentages passing the various sieves shall be corrected when aggregates of varying specific gravities are used, as indicated in the Asphalt Institute MS-2 Mix Design Manual, 7th Edition.

403-3.4 Reclaimed Asphalt Pavement (RAP). Not Used.

RAP shall not be used.

403-3.5 Control strip. Full production shall not begin until an acceptable control strip has been constructed and accepted in writing by the Engineer. Contractor shall prepare and place a quantity of asphalt according to the JMF. The underlying grade or pavement structure upon which the control strip is to be constructed shall be the same as the remainder of the course represented by the control strip.

Contractor will not be allowed to place the control strip until Contractor quality control program (CQCP), showing conformance with the requirements of Paragraph 403-5.1, has been accepted, in writing, by the Engineer.

The control strip will consist of at least 250 tons or 1/2 sublot, whichever is greater. The control strip shall be placed in two lanes of the same width and depth to be used in production with a longitudinal cold joint. The cold joint must be cut back in accordance with Paragraph 403-4.13 using the same procedure that will be used during production. The cold joint for the control strip will be an exposed construction joint at least four (4) hours old or when the mat has cooled to less than 160°F. The equipment used in construction of the control strip shall be the same type, configuration, and weight to be used on the Project.

The control strip shall be evaluated for acceptance as a single lot in accordance with the acceptance criteria in Paragraph 403-6.1 and 403-6.2. The control strip shall be divided into equal sublots. As a minimum, the control strip shall consist of three (3) sublots.

The control strip will be considered acceptable by the RPR if the gradation, asphalt content, and VMA are within the action limits specified in Paragraph 403-5.5a; and Mat density, air voids, and joint density meet the requirements specified in Paragraphs 403-6.2.

If the control strip is unacceptable, necessary adjustments to the JMF, plant operation, placing procedures, and/or rolling procedures shall be made and another control strip shall be placed. Unacceptable control strips shall be removed at Contractor's expense.

Payment will only be made for an acceptable control strip in accordance with Paragraph 403-8.1.

CONSTRUCTION METHODS

403-4.1 Weather limitations. The asphalt shall not be placed upon a wet surface or when the surface temperature of the underlying course is less than specified in Table 4. The temperature requirements may be waived by the RPR, if requested; however, all other requirements including compaction shall be met.

Table 4. Surface Temperature Limitations of Underlying Course

Mat Thickness	Base Temperature (Minimum)	
	Degrees F	Degrees C
3 inches or greater	40	4
Greater than 2 inches but less than 3 inches	45	7

403-4.2 Asphalt plant. Plants used for the preparation of asphalt shall conform to the requirements of American Association of State Highway and Transportation Officials (AASHTO) M156 including the following items:

a. Inspection of plant. The RPR and Engineer (or RPR's authorized representative) shall have access, at all times, to all areas of the plant for checking adequacy of equipment; inspecting operation of the plant: verifying weights, proportions, and material properties; and checking the temperatures maintained in the preparation of the mixtures.

b. Storage bins and surge bins. The asphalt mixture stored in storage and/or surge bins shall meet the same requirements as asphalt mixture loaded directly into trucks. Asphalt mixture shall not be stored in storage and/or surge bins for a period greater than twelve (12) hours. If the RPR determines there is an excessive heat loss, segregation, or oxidation of the asphalt mixture due to temporary storage, temporary storage shall not be allowed.

403-4.3 Aggregate stockpile management. Aggregate stockpiles shall be constructed in such a manner that prevents segregation and intermixing of deleterious materials. Aggregates from different sources shall be stockpiled, weighed, and batched separately at the concrete batch plant. Aggregates that have become segregated or mixed with earth or foreign material shall not be used.

A continuous supply of materials shall be provided to the work to ensure continuous placement.

403-4.4 Hauling equipment. Trucks used for hauling asphalt shall have tight, clean, and smooth metal beds. To prevent the asphalt from sticking to the truck beds, the truck beds shall be lightly coated with a minimum amount of paraffin oil, lime solution, or other material approved by the RPR. Petroleum products

shall not be used for coating truck beds. Each truck shall have a suitable cover to protect the mixture from adverse weather. When necessary, to ensure that the mixture will be delivered to the site at the specified temperature, truck beds shall be insulated or heated, and covers shall be securely fastened.

403-4.4.1 Material transfer vehicle (MTV). Material transfer Vehicles shall be required due to the improvement in smoothness and decrease in both physical and thermal segregation. To transfer the material from the hauling equipment to the paver, use a self-propelled, material transfer vehicle with a swing conveyor that can deliver material to the paver without making contact with the paver. The MTV shall be able to move back and forth between the hauling equipment and the paver providing material transfer to the paver, while allowing the paver to operate at a constant speed. The Material Transfer Vehicle will have remixing and storage capability to prevent physical and thermal segregation.

403-4.5 Asphalt pavers. Asphalt pavers shall be self-propelled with an activated heated screed, capable of spreading and finishing courses of asphalt that will meet the specified thickness, smoothness, and grade. The paver shall have sufficient power to propel itself and the hauling equipment without adversely affecting the finished surface. The asphalt paver shall be equipped with a control system capable of automatically maintaining the specified screed grade and elevation.

If the spreading and finishing equipment in use leaves tracks or indented areas or produces other blemishes in the pavement that are not satisfactorily corrected by the scheduled operations, the use of such equipment shall be discontinued.

The paver shall be capable of paving to a minimum width specified in Paragraph 401-4.11.

403-4.6 Rollers. The number, type, and weight of rollers shall be sufficient to compact the asphalt to the required density while it is still in a workable condition without crushing of the aggregate, depressions, or other damage to the pavement surface. Rollers shall be in good condition, capable of operating at slow speeds to avoid displacement of the asphalt. All rollers shall be specifically designed and suitable for compacting asphalt concrete and shall be properly used. Rollers that impair the stability of any layer of a pavement structure or underlying soils shall not be used.

403-4.6.1 Density device. Contractor shall have on site a density gauge during all paving operations in order to assist in the determination of the optimum rolling pattern, type of roller and frequencies, as well as to monitor the effect of the rolling operations during production paving. Contractor shall also supply a qualified technician during all paving operations to calibrate the density gauge and obtain accurate density readings for all new asphalt. These densities shall be supplied to the RPR upon request at any time during construction. No separate payment will be made for supplying the density gauge and technician.

403-4.7 Preparation of asphalt binder. The asphalt binder shall be heated in a manner that will avoid local overheating and provide a continuous supply of the asphalt material to the mixer at a uniform temperature. The temperature of the unmodified asphalt binder delivered to the mixer shall be sufficient to provide a suitable viscosity for adequate coating of the aggregate particles but shall not exceed 325°F when added to the aggregate. The temperature of modified asphalt binder shall be no more than 350°F when added to the aggregate.

403-4.8 Preparation of mineral aggregate. The aggregate for the asphalt shall be heated and dried. The maximum temperature and rate of heating shall be such that no damage occurs to the aggregates. The temperature of the aggregate and mineral filler shall not exceed 350°F when the asphalt binder is added. Particular care shall be taken that aggregates high in calcium or magnesium content are not damaged by overheating. The temperature shall not be lower than is required to obtain complete coating and uniform distribution on the aggregate particles and to provide a mixture of satisfactory workability.

403-4.9 Preparation of asphalt mixture. The aggregates and the asphalt binder shall be weighed or metered and introduced into the mixer in the amount specified by the JMF. The combined materials shall be mixed until the aggregate obtains a uniform coating of asphalt binder and is thoroughly distributed

throughout the mixture. Wet mixing time shall be the shortest time that will produce a satisfactory mixture, but not less than 25 seconds for batch plants. The wet mixing time for all plants shall be established by the Contractor, based on the procedure for determining the percentage of coated particles described in ASTM D2489, for each individual plant and for each type of aggregate used. The wet mixing time will be set to achieve 95% of coated particles. For continuous mix plants, the minimum mixing time shall be determined by dividing the weight of its contents at operating level by the weight of the mixture delivered per second by the mixer. The moisture content of all asphalt upon discharge shall not exceed 0.5%.

403-4.10 Application of Prime and Tack Coat. Immediately before placing the asphalt mixture, the underlying course shall be cleaned of all dust and debris.

A prime coat in accordance with Item P-602 shall be applied to the subgrade prior to placing the asphalt mixture.

A tack coat shall be applied in accordance with Item P-603 to all vertical and horizontal asphalt and concrete surfaces prior to placement of the first and each subsequent lift of asphalt mixture.

403-4.11 Laydown plan, transporting, placing, and finishing. Prior to the placement of the asphalt, the Contractor shall prepare a laydown plan with the sequence of paving lanes and width to minimize the number of cold joints; the location of any temporary ramps; laydown temperature; and estimated time of completion for each portion of the Work (milling, paving, rolling, cooling, etc.). The laydown plan and any modifications shall be approved by the RPR.

Deliveries shall be scheduled so that placing and compacting of asphalt is uniform with minimum stopping and starting of the paver. Hauling over freshly placed material shall not be permitted until the material has been compacted, as specified, and allowed to cool to approximately ambient temperature. Contractor, at their expense, shall be responsible for repair of any damage to the pavement caused by hauling operations.

Contractor shall survey each lift of asphalt surface course and certify to RPR that every lot of each lift meets the grade tolerances of Paragraph 401-6.2e before the next lift can be placed.

Edges of existing asphalt pavement abutting the new work shall be saw cut and the cut off material and laitance removed. Apply a tack coat in accordance with Item P-603 before new asphalt material is placed against it.

The speed of the paver shall be regulated to eliminate pulling and tearing of the asphalt mat. Placement of the asphalt mix shall begin along the centerline of a crowned section or on the high side of areas with a one way slope unless shown otherwise on the laydown plan as accepted by the RPR. The asphalt mix shall be placed in consecutive adjacent lanes having a minimum width of 10 feet except where edge lanes require less width to complete the area. Additional screed sections attached to widen the paver to meet the minimum lane width requirements must include additional auger sections to move the asphalt mixture uniformly along

The longitudinal joint in one course shall offset the longitudinal joint in the course immediately below by at least 1 foot; however, the joint in the surface top course shall be at the centerline of crowned pavements. Transverse joints in one course shall be offset by at least 10 feet from transverse joints in the previous course. Transverse joints in adjacent lanes shall be offset a minimum of 10 feet. On areas where irregularities or unavoidable obstacles make the use of mechanical spreading and finishing equipment impractical, the asphalt may be spread and luted by hand tools.

The RPR may at any time, reject any batch of asphalt, on the truck or placed in the mat, which is rendered unfit for use due to contamination, segregation, incomplete coating of aggregate, or overheated asphalt mixture. Such rejection may be based on only visual inspection or temperature measurements. In the event of such rejection, Contractor may take a representative sample of the rejected material in the presence of the RPR, and if it can be demonstrated in the laboratory, in the presence of the RPR, that such material was erroneously rejected, payment will be made for the material at the contract unit price.

Areas of segregation in the surface course, as determined by the RPR, shall be removed and replaced at Contractor's expense. The area shall be removed by saw cutting and milling a minimum of the construction lift thickness as specified in Paragraph 401-3.3, Table 2 for the approved mix design. The area to be removed and replaced shall be a minimum width of the paver and a minimum of 10 feet long.

403-4.12 Compaction of asphalt mixture. After placing, the asphalt mixture shall be thoroughly and uniformly compacted by self-propelled rollers. The surface shall be compacted as soon as possible when the asphalt has attained sufficient stability so that the rolling does not cause undue displacement, cracking, or shoving. The sequence of rolling operations and the type of rollers used shall be at the discretion of Contractor. The speed of the roller shall, at all times, be sufficiently slow to avoid displacement of the hot mixture and be effective in compaction. Any surface defects and/or displacement occurring as a result of the roller, or from any other cause, shall be corrected at Contractor's expense.

Sufficient rollers shall be furnished to handle the output of the plant. Rolling shall continue until the surface is of uniform texture, true to grade and cross-section, and the required field density is obtained. To prevent adhesion of the asphalt to the roller, the wheels shall be equipped with a scraper and kept moistened with water as necessary.

In areas not accessible to the roller, the mixture shall be thoroughly compacted with approved power tampers.

Any asphalt that becomes loose and broken, mixed with dirt, contains check-cracking, or in any way defective shall be removed and replaced with fresh hot mixture and immediately compacted to conform to the surrounding area. This Work shall be done at Contractor's expense. Skin patching shall not be allowed**.**

403-4.13 Joints. The formation of all joints shall be made in such a manner as to ensure a continuous bond between the courses and obtain the required density. All joints shall have the same texture as other sections of the course and meet the requirements for smoothness and grade.

The roller shall not pass over the unprotected end of the freshly laid asphalt except when necessary to form a transverse joint. When necessary to form a transverse joint, it shall be made by means of placing a bulkhead or by tapering the course. The tapered edge shall be cut back to its full depth and width on a straight line to expose a vertical face prior to placing the adjacent lane. In both methods, all contact surfaces shall be coated with an asphalt tack coat before placing any fresh asphalt against the joint.

Longitudinal joints which are have been left exposed for more than four (4) hours; the surface temperature has cooled to less than 175°F; or are irregular, damaged, uncompacted or otherwise defective shall be cut back with a cutting wheel or pavement saw a maximum of 3 inches to expose a clean, sound, uniform vertical surface for the full depth of the course. All cutback material and any laitance produced from cutting joints shall be removed from the project. An asphalt tack coat or other product approved by the RPR shall be applied to the clean, dry joint prior to placing any additional fresh asphalt against the joint. The cost of this cold joint work shall be considered incidental to the cost of the asphalt, except tack will be paid per Item P-603.

403-4.14 Saw-cut grooving. Saw-cut grooving is not required.

403-4.15 Diamond grinding. Diamond grinding shall be completed prior to pavement grooving. Diamond grinding shall be accomplished by sawing with saw blades impregnated with industrial diamond abrasive.

Diamond grinding shall be performed with a machine designed specifically for diamond grinding capable of cutting a path at least 3 feet wide. The saw blades shall be 1/8-inch (wide with a minimum of 55 to 60 blades per 12 inches of cutting head width; grooves between 0.090 and 0.130 inches wide; and peaks and ridges approximately 1/32 inch higher than the bottom of the grinding cut. The actual number of blades will be determined by the Contractor and depend on the hardness of the aggregate. Equipment or grinding procedures that causes ravels, aggregate fractures, spalls, or disturbance to the pavement will not be permitted.

Grinding will be tapered in all directions to provide smooth transitions to areas not requiring grinding. The slurry resulting from the grinding operation shall be continuously removed and the pavement left in a clean condition. Contractor shall apply a surface treatment per Item P-608 to all areas that have been subject to grinding.

403-4.16 Nighttime Paving Requirements. Contractor shall provide adequate lighting during any nighttime construction. A lighting plan shall be submitted by Contractor and approved by the RPR prior to the start of any nighttime work. All Work shall be in accordance with the approved CSPP and lighting plan.

CONTRACTOR QUALITY CONTROL (CQC)

403-5.1 General. Contractor shall develop a CQCP in accordance with Item C-100. No partial payment will be made for materials that are subject to specific QC requirements without an approved CQCP.

403-5.2 Contractor quality control (QC) facilities. Contractor shall provide or contract for testing facilities in accordance with Item C-100. The RPR shall be permitted unrestricted access to inspect Contractor's QC facilities and witness QC activities. The RPR/Engineer will advise Contractor in writing of any noted deficiencies concerning the QC facility, equipment, supplies, or testing personnel and procedures. When the deficiencies are serious enough to be adversely affecting the test results, the incorporation of the materials into the work shall be suspended immediately and will not be permitted to resume until the deficiencies are satisfactorily corrected.

403-5.3 Quality Control (QC) testing. Contractor shall perform all QC tests necessary to control the production and construction processes applicable to these Specifications and as set forth in the approved CQCP. The testing program shall include, but not necessarily be limited to, tests for the control of asphalt content, aggregate gradation, temperatures, aggregate moisture, field compaction, and surface smoothness. A QC Testing Plan shall be developed as part of the CQCP**.**

a. Asphalt content. A minimum of two tests shall be performed per day in accordance with ASTM D6307 or ASTM D2172 for determination of asphalt content. When using ASTM D6307, the correction factor shall be determined as part of the first test performed at the beginning of plant production; and as part of every tenth test performed thereafter. The asphalt content for the day will be determined by averaging the test results.

b. Gradation. Aggregate gradations shall be determined a minimum of twice per lot from mechanical analysis of extracted aggregate in accordance with ASTM D5444, ASTM C136, and ASTM C117.

c. Moisture content of aggregate. The moisture content of aggregate used for production shall be determined a minimum of once per lot in accordance with ASTM C566.

d. Moisture content of asphalt. The moisture content of the asphalt shall be determined once per lot in accordance with AASHTO T329 or ASTM D1461.

e. Temperatures. Temperatures shall be checked, at least four times per lot, at necessary locations to determine the temperatures of the dryer, the asphalt binder in the storage tank, the asphalt at the plant, and the asphalt at the job site.

f. In-place density monitoring. Contractor shall conduct any necessary testing to ensure that the specified density is being achieved. A nuclear gauge may be used to monitor the pavement density in accordance with ASTM D2950.

g. Smoothness for Contractor Quality Control.

Contractor shall perform smoothness testing in transverse and longitudinal directions daily to verify that the construction processes are producing pavement with variances less than 1/4 inch in 12 feet, identifying areas that may pond water which could lead to hydroplaning of aircraft. If the smoothness criteria is not met, appropriate changes and corrections to the construction process shall be made by Contractor before construction continues

Contractor may use a 12-foot straightedge or a rolling inclinometer meeting the requirements of ASTM E2133. Straight-edge testing shall start with one-half the length of the straightedge at the edge of pavement section being tested and then moved ahead one-half the length of the straightedge for each successive measurement. Testing shall be continuous across all joints. The surface irregularity shall be determined by placing the freestanding (unleveled) straightedge on the pavement surface and allowing it to rest upon the two highest spots covered by its length and measuring the maximum gap between the straightedge and the pavement surface in the area between the two high points. If the rolling inclinometer is used, the data may be evaluated using the FAA profile program, ProFAA, using the 12-foot straightedge simulation function.

Smoothness readings shall not be made across grade changes or cross slope transitions. The transition between new and existing pavement shall be evaluated separately for conformance with the Plans.

(1) Transverse measurements. Transverse measurements shall be taken for each day's production placed. Transverse measurements will be taken perpendicular to the pavement centerline each 50 feet or more often as determined by the RPR. The joint between lanes shall be tested separately to facilitate smoothness between lanes.

(2) Longitudinal measurements. Longitudinal measurements shall be taken for each day's production placed. Longitudinal tests will be parallel to the centerline of paving; at the center of paving lanes when widths of paving lanes are less than 20 feet; and at the third points of paving lanes when widths of paving lanes are 20 feet or greater.

Deviations on the final surface course in either the transverse or longitudinal direction that will trap water greater than 1/4 inch shall be corrected with diamond grinding per Paragraph 403-4.15 or by removing and replacing the surface course to full depth. Grinding shall be tapered in all directions to provide smooth transitions to areas not requiring grinding. All areas in which diamond grinding has been performed shall be subject to the final pavement thickness tolerances specified in Paragraph 401-6.1d(3). Areas that have been ground shall be sealed with a surface treatment in accordance with Item P-608. To avoid the surface treatment creating any conflict with runway or taxiway markings, it may be necessary to seal a larger area.

Control charts shall be kept to show area of each day's placement and the percentage of corrective grinding required. Corrections to production and placement shall be initiated when corrective grinding is required. If Contractor's machines and/or methods produce significant areas that need corrective actions in excess of 10 percent of a day's production, production shall be stopped until corrective measures are implemented by Contractor.

h. Grade. Grade shall be evaluated daily to allow adjustments to paving operations when grade measurements do not meet specifications. As a minimum, grade shall be evaluated prior to the placement of the first lift and then prior to and after placement of the surface lift.

Measurements will be taken at appropriate gradelines (as a minimum at center and edges of paving lane) and longitudinal spacing as shown on cross-sections and Plans. The final surface of the pavement will not vary from the gradeline elevations and cross-sections shown on the Plans by more than 1/2 inch vertically and 0.1 feet laterally. The documentation will be provided by Contractor to the RPR by the end of the following working day.

Areas with humps or depressions that exceed grade or smoothness criteria and that retain water on the surface must be ground off provided the course thickness after grinding is not more than 1/2 inch less than the thickness specified on the Plans. Grinding shall be in accordance with Paragraph 403-4.15.

Contractor shall repair low areas or areas that cannot be corrected by grinding by removal of deficient areas to the depth of the final course plus 1/2 inch and replacing with new material. Skin patching is not allowed.

403-5.4 Sampling. When directed by the RPR, Contractor shall sample and test any material that appears inconsistent with similar material being sampled, unless such material is voluntarily removed and replaced or deficiencies corrected by Contractor. All sampling shall be in accordance with standard procedures specified.

403-5.5 Control charts. Contractor shall maintain linear control charts both for individual measurements and range (i.e., difference between highest and lowest measurements) for aggregate gradation, asphalt content, and VMA. The VMA for each day shall be calculated and monitored by the QC laboratory.

Control charts shall be posted in a location satisfactory to the RPR and kept current. As a minimum, the control charts shall identify the project number, the contract item number, the test number, each test parameter, the Action and Suspension Limits applicable to each test parameter, and Contractor's test results. Contractor shall use the control charts as part of a process control system for identifying potential problems and assignable causes before they occur. If Contractor's projected data during production indicates a problem and Contractor is not taking satisfactory corrective action, the RPR may suspend production or acceptance of the material.

a. Individual measurements. Control charts for individual measurements shall be established to maintain process control within tolerance for aggregate gradation, asphalt content, and VMA. The control charts shall use the JMF target values as indicators of central tendency for the following test parameters with associated Action and Suspension Limits:

Control Chart Limits for Individual Measurements

Sieve	Action Limit	Suspension Limit
3/4 inch	±6%	±9%
1/2 inch	±6%	±9%
3/8 inch	±6%	±9%
No. 4	±6%	±9%
No. 16	±5%	±7.5%
No. 50	±3%	±4.5%
No. 200	±2%	±3%
Asphalt Content	±0.45%	±0.70%
Minimum VMA	-0.5%	-1.0%

b. Range. Control charts for range shall be established to control process variability for the test parameters and Suspension Limits listed below. The range shall be computed for each lot as the difference between the two test results for each control parameter. The Suspension Limits specified below are based on a sample size of n = 2. Should Contractor elect to perform more than two tests per lot, the Suspension Limits shall be adjusted by multiplying the Suspension Limit by 1.18 for n = 3 and by 1.27 for n = 4.

Control Chart Limits Based on Range
(n = 2)

Sieve	Suspension Limit
1/2 inch	11%
3/8 inch	11%
No. 4	11%
No. 16	9%
No. 50	6%
No. 200	3.5%
Asphalt Content	0.8%

c. Corrective action. The CQCP shall indicate that appropriate action shall be taken when the process is believed to be out of tolerance. The Plan shall contain sets of rules to gauge when a process is out of control and detail what action will be taken to bring the process into control. As a minimum, a process shall be deemed out of control and production stopped and corrective action taken, if:

(1) One point falls outside the Suspension Limit line for individual measurements or range; or

(2) Two points in a row fall outside the Action Limit line for individual measurements.

403-5.6 Quality control (QC) reports. Contractor shall maintain records and shall submit reports of QC activities daily, in accordance with the CQCP described in Item C-100.

MATERIAL ACCEPTANCE

403-6.1. Quality Assurance Acceptance sampling and testing. Unless otherwise specified, all acceptance sampling and testing necessary to determine conformance with the requirements specified in this Section will be performed by Engineer at no cost to Contractor except that coring as required in this Section shall be completed and paid for by Contractor.

a. Quality Assurance (QA) testing laboratory. The QA testing laboratory performing these acceptance tests will be accredited in accordance with ASTM D3666. The QA laboratory accreditation will be current and listed on the accrediting authority's website. All test methods required for acceptance sampling and testing will be listed on the lab accreditation.

b. Lot Size. A standard lot will be equal to one day's production divided into approximately equal sublots of between 400 to 600 tons. When only one or two sublots are produced in a day's production, the sublots will be combined with the production lot from the previous or next day.

Where more than one plant is simultaneously producing asphalt for the job, the lot sizes will apply separately for each plant.

c. Asphalt air voids. Plant-produced asphalt will be tested for air voids on a sublot basis.

(1) Sampling. Material from each sublot shall be sampled in accordance with ASTM D3665. Samples shall be taken from material deposited into trucks at the plant or at the job site in accordance with ASTM D979. The sample of asphalt may be put in a covered metal tin and placed in an oven for not less than 30 minutes nor more than 60 minutes to maintain the material at or above the compaction temperature as specified in the JMF.

(2) Testing. Air voids will be determined for each sublot in accordance with ASTM D3203 for a set of compacted specimens prepared in accordance with ASTM D6925.

d. In-place asphalt mat and joint density. Each sublot will be tested for in-place mat and joint density as a percentage of the theoretical maximum density (TMD).

(1) Sampling. Contractor will cut minimum 5 inches diameter samples in accordance with ASTM D5361. Contractor shall furnish all tools, labor, and materials for cleaning, and filling the cored pavement. Laitance produced by the coring operation shall be removed immediately after coring, and core holes shall be filled within one day after sampling in a manner acceptable to the RPR.

(2) Bond. Each lift of asphalt shall be bonded to the underlying layer. If cores reveal that the surface is not bonded, additional cores shall be taken as directed by the RPR to determine the extent of unbonded areas. Unbonded areas shall be removed by milling and replaced at no additional cost as directed by the RPR.

(3) Thickness. Thickness of each lift of surface course will be evaluated by the RPR for compliance to the requirements shown on the Plans after any necessary corrections for grade. Measurements of thickness will be made using the cores extracted for each sublot for density measurement. The maximum allowable deficiency at any point will not be more than 1/4 inch less than the thickness indicated for the lift. Average thickness of lift, or combined lifts, will not be less than the indicated thickness. Where the thickness tolerances are not met, the lot or sublot shall be corrected by Contractor at his expense by removing the deficient area and replacing with new pavement. Contractor, at his expense, may take additional cores as approved by the RPR to circumscribe the deficient area.

(4) Mat density. One core shall be taken from each sublot. Core locations will be determined by the RPR in accordance with ASTM D3665. Cores for mat density shall not be taken closer than 1 foot from a transverse or longitudinal joint. The bulk specific gravity of each cored sample will be determined in accordance with ASTM D2726. The percent compaction (density) of each sample will be determined by dividing the bulk specific gravity of each sublot sample by the TMD for that sublot.

(5) Joint density. One core centered over the longitudinal joint shall be taken for each sublot which contains a longitudinal joint. Core locations will be determined by the RPR in accordance with ASTM D3665. The bulk specific gravity of each core sample will be determined in accordance with ASTM D2726. The percent compaction (density) of each sample will be determined by dividing the bulk specific gravity of each joint density sample by the average TMD for the lot. The TMD used to determine the joint density at joints formed between lots will be the lower of the average TMD values from the adjacent lots.

403-6.2 Acceptance criteria.

a. General. Acceptance will be based on the implementation of the Contractor Quality Control Program (CQCP) and the following characteristics of the asphalt and completed pavements: air voids, mat density, joint density, and grade.

b. Air voids. Acceptance of each lot of plant produced material for air voids will be based upon the average air void from the sublots. If the average air voids of the lot are equal to or greater than 2% and equal to or less than 5%, then the lot will be acceptable. If the average is below 2% or greater than 5%, the lot shall be removed and replaced at Contractor's expense.

c. Mat density. Acceptance of each lot of plant produced material for mat density will be based on the average of all of the densities taken from the sublots. If the average mat density of the lot so established equals or exceeds 94%, the lot will be acceptable. If the average mat density of the lot is below 94%, the lot shall be removed and replaced at Contractor's expense.

d. Joint density. Acceptance of each lot of plant produced asphalt for joint density will be based on the average of all of the joint densities taken from the sublots. If the average joint density of the lot so established equals or exceeds 92%, the lot will be acceptable. If the average joint density of the lot is less than 92%, Contractor shall stop production and evaluate the method of compacting joints. Production may

resume once the reason for poor compaction has been determined and appropriate measures have been taken to ensure proper compaction.

e. Grade. The final finished surface of the pavement of the completed project shall be surveyed to verify that the grade elevations and cross-sections shown on the Plans do not deviate more than 1/2 inch vertically or 0.1 feet laterally.

Cross-sections of the pavement shall be taken at a minimum 50-foot longitudinal spacing and at all longitudinal grade breaks. Minimum cross-section grade points shall include grade at centerline, and edge of pavement.

The survey and documentation shall be stamped and signed by a licensed surveyor. Payment for sublots that do not meet grade for over 25% of the sublot shall not be more than 95%.

403-6.3 Resampling Pavement for Mat Density.

a. General. Resampling of a lot of pavement will only be allowed for mat density and then, only if Contractor requests same in writing, within 48 hours after receiving the written test results from the RPR. A retest will consist of all the sampling and testing procedures contained in Paragraphs 403-6.1. Only one resampling per lot will be permitted.

(1) A redefined mat density will be calculated for the resampled lot. The number of tests used to calculate the redefined mat density will include the initial tests made for that lot plus the retests.

(2) The cost for resampling and retesting shall be borne by Contractor.

b. Payment for resampled lots. The redefined mat density for a resampled lot will be used to evaluate the acceptance of that lot in accordance with Paragraph 403-6.2.

c. Outliers. Check for outliers in accordance with ASTM E178, at a significance level of 5%. Outliers will be discarded, and density determined using the remaining test values.

METHOD OF MEASUREMENT

403-7.1 Measurement. Plant mix asphalt mix pavement shall be measured by the number of tons of asphalt pavement used in the accepted work. Recorded batch weights or truck scale weights will be used to determine the basis for the tonnage.

BASIS OF PAYMENT

403-8.1 Payment. Payment for a lot of asphalt mixture meeting all acceptance criteria as specified in Paragraph 403-6.2 shall be made at the contract unit price per ton for asphalt. The price shall be compensation for furnishing all materials, for all preparation, mixing, and placing of these materials, and for all labor, equipment, tools, and incidentals necessary to complete the item.

Payment will be made under:

Item P-403-8.1 Asphalt Base Course, 5-inch thickness, 3-inch max lifts, complete, per ton

REFERENCES

The publications listed below form a part of this Specification to the extent referenced. The publications are referred to within the text by the basic designation only.

ASTM International (ASTM)

ASTM C29	Standard Test Method for Bulk Density ("Unit Weight") and Voids in Aggregate
ASTM C88	Standard Test Method for Soundness of Aggregates by Use of Sodium Sulfate or Magnesium Sulfate
ASTM C117	Standard Test Method for Materials Finer than 75-μm (No. 200) Sieve in Mineral Aggregates by Washing
ASTM C127	Standard Test Method for Density, Relative Density (Specific Gravity), and Absorption of Coarse Aggregate
ASTM C131	Standard Test Method for Resistance to Degradation of Small-Size Coarse Aggregate by Abrasion and Impact in the Los Angeles Machine
ASTM C136	Standard Test Method for Sieve or Screen Analysis of Fine and Coarse Aggregates
ASTM C142	Standard Test Method for Clay Lumps and Friable Particles in Aggregates
ASTM C183	Standard Practice for Sampling and the Amount of Testing of Hydraulic Cement
ASTM C566	Standard Test Method for Total Evaporable Moisture Content of Aggregate by Drying
ASTM D75	Standard Practice for Sampling Aggregates
ASTM D242	Standard Specification for Mineral Filler for Bituminous Paving Mixtures
ASTM D946	Standard Specification for Penetration-Graded Asphalt Cement for Use in Pavement Construction
ASTM D979	Standard Practice for Sampling Bituminous Paving Mixtures
ASTM D1073	Standard Specification for Fine Aggregate for Bituminous Paving Mixtures
ASTM D1074	Standard Test Method for Compressive Strength of Bituminous Mixtures
ASTM D1461	Standard Test Method for Moisture or Volatile Distillates in Bituminous Paving Mixtures
ASTM D2041	Standard Test Method for Theoretical Maximum Specific Gravity and Density of Bituminous Paving Mixtures
ASTM D2172	Standard Test Method for Quantitative Extraction of Bitumen from Bituminous Paving Mixtures
ASTM D2419	Standard Test Method for Sand Equivalent Value of Soils and Fine Aggregate
ASTM D2489	Standard Practice for Estimating Degree of Particle Coating of Bituminous-Aggregate Mixtures

ASTM D2726	Standard Test Method for Bulk Specific Gravity and Density of Non-Absorptive Compacted Bituminous Mixtures
ASTM D2950	Standard Test Method for Density of Bituminous Concrete in Place by Nuclear Methods
ASTM D3203	Standard Test Method for Percent Air Voids in Compacted Dense and Open Bituminous Paving Mixtures
ASTM D3381	Standard Specification for Viscosity-Graded Asphalt Cement for Use in Pavement Construction
ASTM D3665	Standard Practice for Random Sampling of Construction Materials
ASTM D3666	Standard Specification for Minimum Requirements for Agencies Testing and Inspecting Road and Paving Materials
ASTM D4125	Standard Test Methods for Asphalt Content of Bituminous mixtures by the Nuclear Method
ASTM D4318	Standard Test Methods for Liquid Limit, Plastic Limit, and Plasticity Index of Soils
ASTM D4552	Standard Practice for Classifying Hot-Mix Recycling Agents
ASTM D4791	Standard Test Method for Flat Particles, Elongated Particles, or Flat and Elongated Particles in Coarse Aggregate
ASTM D4867	Standard Test Method for Effect of Moisture on Asphalt Concrete Paving Mixtures
ASTM D5444	Standard Test Method for Mechanical Size Analysis of Extracted Aggregate
ASTM D5581	Standard Test Method for Resistance to Plastic Flow of Bituminous Mixtures Using Marshall Apparatus (6 inch-Diameter Specimen)
ASTM D5821	Standard Test Method for Determining the Percentage of Fractured Particles in Coarse Aggregate
ASTM D6307	Standard Test Method for Asphalt Content of Hot-Mix Asphalt by Ignition Method
ASTM D6373	Standard Specification for Performance Graded Asphalt Binder
ASTM D6752	Standard Test Method for Bulk Specific Gravity and Density of Compacted Bituminous Mixtures Using Automatic Vacuum Sealing Method
ASTM D6925	Standard Test Method for Preparation and Determination of the Relative Density of Hot Mix Asphalt (HMA) Specimens by Means of the SuperPave Gyratory Compactor
ASTM D6926	Standard Practice for Preparation of Bituminous Specimens Using Marshall Apparatus
ASTM D6927	Standard Test Method for Marshall Stability and Flow of Bituminous Mixtures
ASTM D6995	Standard Test Method for Determining Field VMA based on the Maximum Specific Gravity of the Mix (Gmm)

ASTM E11	Standard Specification for Woven Wire Test Sieve Cloth and Test Sieves
ASTM E178	Standard Practice for Dealing with Outlying Observations
ASTM E2133	Standard Test Method for Using a Rolling Inclinometer to Measure Longitudinal and Transverse Profiles of a Traveled Surface

American Association of State Highway and Transportation Officials (AASHTO)

AASHTO M156	Standard Specification for Requirements for Mixing Plants for Hot-Mixed, Hot-Laid Bituminous Paving Mixtures
AASHTO T329	Standard Method of Test for Moisture Content of Hot Mix Asphalt (HMA) by Oven Method
AASHTO T 340	Standard Method of Test for Determining the Rutting Susceptibility of Hot Mix Asphalt (APA) Using the Asphalt Pavement Analyzer (APA)

Asphalt Institute (AI)

MS-2	Mix Design Manual, 7th Edition
MS-26	Asphalt Binder Handbook AI State Binder Specification Database

FAA Orders

5300.1	Modifications to Agency Airport Design, Construction, and Equipment Standards

Federal Highway Administration (FHWA)

Long Term Pavement Performance Binder program

Software

FAARFIELD

END OF ITEM P-403

Item P-602 Emulsified Asphalt Prime Coat

DESCRIPTION

602-1.1 This item shall consist of an application of emulsified asphalt material on the prepared base course in accordance with these specifications and in reasonably close conformity to the lines shown on the Plans.

MATERIALS

602-2.1 Emulsified Asphalt material. The emulsified asphalt material shall be as specified in ASTM D3628 for use as a prime coat appropriate to local conditions. Contractor shall provide a copy of the manufacturer's Certificate of Analysis (COA) for the emulsified asphalt material. The COA shall be provided to and approved by the Resident Project Representative (RPR) before the emulsified asphalt material is applied. The furnishing of the COA for the emulsified asphalt material shall not be interpreted as a basis for Final Acceptance. The manufacturer's COA may be subject to verification by testing the material delivered for use on the Project.

CONSTRUCTION METHODS

602-3.1 Weather limitations. The emulsified asphalt prime coat shall be applied only when the existing surface is dry; the atmospheric temperature is 50°F or above, and the temperature has not been below 35°F for the 12 hours prior to application; and when the weather is not foggy or rainy. The temperature requirements may be waived when directed by the RPR.

602-3.2 Equipment. The equipment shall include a self-powered pressure asphalt material distributor and equipment for heating asphalt material.

Provide a distributor with pneumatic tires of such size and number that the load produced on the base surface does not exceed 65.0 psi of tire width to prevent rutting, shoving or otherwise damaging the base, surface or other layers in the pavement structure. Design and equip the distributor to spray the asphalt material in a uniform coverage at the specified temperature, at readily determined and controlled rates from 0.05 to 1.0 gallons per square yard, with a pressure range of 25 to 75 psi and with an allowable variation from the specified rate of not more than ±5%, and at variable widths. Include with the distributor equipment a separate power unit for the bitumen pump, full-circulation spray bars, tachometer, pressure gauges, volume-measuring devices, adequate heaters for heating of materials to the proper application temperature, a thermometer for reading the temperature of tank contents, and a hand hose attachment suitable for applying asphalt material manually to areas inaccessible to the distributor. Equip the distributor to circulate and agitate the asphalt material during the heating process. If the distributor is not equipped with an operable quick shutoff valve, the prime operations shall be started and stopped on building paper.

A power broom and power blower suitable for cleaning the surfaces to which the asphalt coat is to be applied shall be provided.

Asphalt distributors must be calibrated annually in accordance with ASTM D2995. Contractor must furnish a current calibration certification for the asphalt distributor truck from any State or other agency as approved by the RPR.

602-3.3 Application of emulsified asphalt material. Immediately before applying the prime coat, the full width of the surface to be primed shall be swept with a power broom to remove all loose dirt and other objectionable material.

The asphalt emulsion material shall be uniformly applied with an asphalt distributor at the rate of 0.15 to 0.30 gallons per square yard depending on the base course surface texture. The type of asphalt material and application rate shall be approved by the RPR prior to application.

Following application of the emulsified asphalt material and prior to application of the succeeding layer of pavement, allow the asphalt coat to cure and to obtain evaporation of any volatiles or moisture. Maintain the coated surface until the succeeding layer of pavement is placed, by protecting the surface against damage and by repairing and recoating deficient areas. Allow the prime coat to cure without being disturbed for a period of at least 48 hours or longer, as may be necessary to attain penetration into the treated course. Furnish and spread sand to effectively blot up and cure excess asphalt material. Contractor shall remove blotting sand prior to asphalt concrete lay down operations at no additional expense to Owner. Keep traffic off surfaces freshly treated with asphalt material. Provide sufficient warning signs and barricades so that traffic will not travel over freshly treated surfaces.

602-3.4 Trial application rates. Contractor shall apply a minimum of three lengths of at least 100 feet for the full width of the distributor bar to evaluate the amount of emulsified asphalt material that can be satisfactorily applied with the equipment. Apply three different application rates of emulsified asphalt materials within the application range specified in Paragraph 602-3.3. Other trial applications can be made using various amounts of material as directed by the RPR. The trial application is to demonstrate the equipment can uniformly apply the emulsified asphalt material within the rates specified and determine the application rate for the Project.

602-3.5 Freight and waybills. Contractor shall submit waybills and delivery tickets during the progress of the Work. Before the final estimate is allowed, file with the RPR certified waybills and certified delivery tickets for all emulsified asphalt materials used in the construction of the pavement covered by the Contract. Do not remove emulsified asphalt material from storage until the initial outage and temperature measurements have been taken. The delivery or storage units will not be released until the final outage has been taken.

METHOD OF MEASUREMENT

602-4.1 The emulsified asphalt material for prime coat shall be measured by the gallon. Volume shall be corrected to the volume at 60°F in accordance with ASTM D4311. The emulsified asphalt material paid for will be the measured quantities used in the accepted work, provided that the measured quantities are not 10% over the specified application rate. Any amount of emulsified asphalt material more than 10% over the specified application rate for each application will be deducted from the measured quantities, except for irregular areas where hand spraying of the emulsified asphalt material is necessary. Water added to emulsified asphalt will not be measured for payment.

BASIS OF PAYMENT

602-5.1 Payment shall be made at the contract unit price per gallon for emulsified asphalt prime coat. This price shall be full compensation for furnishing all materials and for all preparation, delivering, and applying the materials, and for all labor, equipment, tools, and incidentals necessary to complete this item.

Payment will be made under:

Item P-602-5.1	Emulsified Asphalt Prime Coat, complete, per gallon

REFERENCES

The publications listed below form a part of this Specification to the extent referenced. The publications are referred to within the text by the basic designation only.

ASTM International (ASTM)

ASTM D2995	Standard Practice for Estimating Application Rate and Residual Application Rate of Bituminous Distributors
ASTM D3628	Standard Practice for Selection and Use of Emulsified Asphalts

END OF ITEM P-602

Item P-603 Emulsified Asphalt Tack Coat

DESCRIPTION

603-1.1 This item shall consist of preparing and treating an asphalt or concrete surface with asphalt material in accordance with these specifications and in reasonably close conformity to the lines shown on the plans.

MATERIALS

603-2.1 Asphalt materials. The asphalt material shall be an emulsified asphalt as specified in ASTM D3628 as an asphalt application for tack coat appropriate to local conditions. The emulsified asphalt shall not be diluted. Contractor shall provide a copy of the manufacturer's Certificate of Analysis (COA) for the asphalt material to the Resident Project Representative (RPR) before the asphalt material is applied for review and acceptance. The furnishing of COA for the asphalt material shall not be interpreted as a basis for Final Acceptance. The manufacturer's COA may be subject to verification by testing the material delivered for use on the Project.

CONSTRUCTION METHODS

603-3.1 Weather limitations. The tack coat shall be applied only when the existing surface is dry and the atmospheric temperature is 50°F or above; the temperature has not been below 35°F for the 12 hours prior to application; and when the weather is not foggy or rainy. The temperature requirements may be waived when directed by the RPR.

603-3.2 Equipment. Contractor shall provide equipment for heating and applying the emulsified asphalt material. The emulsion shall be applied with a manufacturer-approved computer rate-controlled asphalt distributor. The equipment shall be in good working order and contain no contaminants or diluents in the tank. Spray bar tips must be clean, free of burrs, and of a size to maintain an even distribution of the emulsion. Any type of tip or pressure source is suitable that will maintain predetermined flow rates and constant pressure during the application process with application speeds under 8 miles per hour or 700 feet per minute.

The equipment will be tested under pressure for leaks and to ensure proper set-up before use to verify truck set-up (via a test-shot area), including but not limited to, nozzle tip size appropriate for application, spray-bar height and pressure and pump speed, evidence of triple-overlap spray pattern, lack of leaks, and any other factors relevant to ensure the truck is in good working order before use.

The distributor truck shall be equipped with a minimum 12-foot spreader spray bar with individual nozzle control with computer-controlled application rates. The distributor truck shall have an easily accessible thermometer that constantly monitors the temperature of the emulsion and have an operable mechanical tank gauge that can be used to cross-check the computer accuracy. If the distributor is not equipped with an operable quick shutoff valve, the prime operations shall be started and stopped on building paper.

The distributor truck shall be equipped to effectively heat and mix the material to the required temperature prior to application as required. Heating and mixing shall be done in accordance with the manufacturer's recommendations. Do not overheat or over mix the material.

The distributor shall be equipped with a hand sprayer.

Asphalt distributors must be calibrated annually in accordance with ASTM D2995. Contractor must furnish a current calibration certification for the asphalt distributor truck from any State or other agency as approved by the RPR.

A power broom and/or power blower suitable for cleaning the surfaces to which the asphalt tack coat is to be applied shall be provided.

603-3.3 Application of emulsified asphalt material. The emulsified asphalt shall not be diluted. Immediately before applying the emulsified asphalt tack coat, the full width of surface to be treated shall be swept with a power broom and/or power blower to remove all loose dirt and other objectionable material.

The emulsified asphalt material shall be uniformly applied with an asphalt distributor at the rates appropriate for the conditions and surface specified in the table below. The type of asphalt material and application rate shall be approved by the RPR prior to application.

Emulsified Asphalt

Surface Type	Residual Rate, gal/SY	Emulsion Application Bar Rate, gal/SY
New asphalt	0.02-0.05	0.03-0.07
Existing asphalt	0.04-0.07	0.06-0.11
Milled Surface	0.04-0.08	.0.06-0.12
Concrete	0.03-0.05	0.05-0.08

After application of the tack coat, the surface shall be allowed to cure without being disturbed for the period of time necessary to permit drying and setting of the tack coat. This period shall be determined by the RPR. Contractor shall protect the tack coat and maintain the surface until the next course has been placed. When the tack coat has been disturbed by Contractor, tack coat shall be reapplied at Contractor's expense.

603-3.4 Freight and waybills. Contractor shall submit waybills and delivery tickets, during progress of the Work. Before the final statement is allowed, file with the RPR certified waybills and certified delivery tickets for all emulsified asphalt materials used in the construction of the pavement covered by the contract. Do not remove emulsified asphalt material from storage until the initial outage and temperature measurements have been taken. The delivery or storage units will not be released until the final outage has been taken.

METHOD OF MEASUREMENT

603-4.1 The emulsified asphalt material for tack coat shall be measured by the gallon. Volume shall be corrected to the volume at 60°F in accordance with ASTM D1250. The emulsified asphalt material paid for will be the measured quantities used in the accepted Work, provided that the measured quantities are not 10% over the specified application rate. Any amount of emulsified asphalt material more than 10% over the specified application rate for each application will be deducted from the measured quantities, except for irregular areas where hand spraying of the emulsified asphalt material is necessary. Water added to emulsified asphalt will not be measured for payment.

BASIS OF PAYMENT

603.5-1 Payment shall be made at the contract unit price per gallon of emulsified asphalt material. This price shall be full compensation for furnishing all materials, for all preparation, delivery, and application of these materials, and for all labor, equipment, tools, and incidentals necessary to complete the item.

Payment will be made under:

Item P-603-5.1	Emulsified Asphalt Tack Coat, complete, per gallon

REFERENCES

The publications listed below form a part of this Specification to the extent referenced. The publications are referred to within the text by the basic designation only.

ASTM International (ASTM)

ASTM D1250	Standard Guide for Use of the Petroleum Measurement Tables
ASTM D2995	Standard Practice for Estimating Application Rate and Residual Application Rate of Bituminous Distributors
ASTM D3628	Standard Practice for Selection and Use of Emulsified Asphalts

END ITEM P-603

Item P-610 Concrete for Miscellaneous Structures

DESCRIPTION

610-1.1 This item shall consist of concrete and reinforcement, as shown on the plans, prepared and constructed in accordance with these Specifications. This Specification shall be used for all concrete other than airfield pavement which are cast-in-place.

MATERIALS

610-2.1 General. Only approved materials, conforming to the requirements of these Specifications, shall be used in the Work. Materials may be subject to inspection and tests at any time during their preparation or use. The source of all materials shall be approved by the Resident Project Representative (RPR) before delivery or use in the Work. Representative preliminary samples of the materials shall be submitted by Contractor, when required, for examination and test. Materials shall be stored and handled to ensure preservation of their quality and fitness for use and shall be located to facilitate prompt inspection. All equipment for handling and transporting materials and concrete must be clean before any material or concrete is placed in them.

The use of pit-run aggregates shall not be permitted unless the pit-run aggregate has been screened and washed, and all fine and coarse aggregates stored separately and kept clean. The mixing of different aggregates from different sources in one storage stockpile or alternating batches of different aggregates shall not be permitted.

a. Reactivity. Fine aggregate and coarse aggregates to be used in all concrete shall have been tested separately within six months of the project in accordance with ASTM C1260. Test results shall be submitted to the RPR. The aggregate shall be considered innocuous if the expansion of test specimens, tested in accordance with ASTM C1260, does not exceed 0.08% at 14 days (16 days from casting). If the expansion either or both test specimen is greater than 0.08% at 14 days, but less than 0.20%, a minimum of 25% of Type F fly ash, or between 40% and 55% of slag cement shall be used in the concrete mix.

If the expansion is greater than 0.20% the aggregates shall not be used, and test results for other aggregates must be submitted for evaluation.

610-2.2 Coarse aggregate. The coarse aggregate for concrete shall meet the requirements of ASTM C33 and the requirements of Table 4, Class Designation 5S; and the grading requirements shown below, as required for the Project.

Coarse Aggregate Grading Requirements

Maximum Aggregate Size	ASTM C33, Table 3 Grading Requirements (Size No.)
1 1/2 inch	467 or 4 and 67
1 inch	57
3/4 inch (19 mm)	67
1/2 inch	7

610-2.2.1 Coarse Aggregate susceptibility to durability (D) cracking. Not used.

610-2.3 Fine aggregate. The fine aggregate for concrete shall meet all fine aggregate requirements of ASTM C33.

610-2.4 Cement. Cement shall conform to the requirements of ASTM C-150 Type II.

610-2.5 Cementitious materials.

a. Fly ash. Fly ash shall meet the requirements of ASTM C618, with the exception of loss of ignition, where the maximum shall be less than 6%. Fly ash shall have a Calcium Oxide (CaO) content of less than 15% and a total available alkali content less than 3% per ASTM C311. Fly ash produced in furnace operations using liming materials or soda ash (sodium carbonate) as an additive shall not be acceptable. Contractor shall furnish the previous three most recent, consecutive ASTM C618 reports for each source of fly ash proposed in the concrete mix and shall furnish each additional report as they become available during the Project. The reports can be used for acceptance or the material may be tested independently by the RPR.

b. Slag cement (ground granulated blast furnace (GGBF)). Slag cement shall conform to ASTM C989, Grade 100 or Grade 120. Slag cement shall be used only at a rate between 25% and 55% of the total cementitious material by mass.

610-2.6 Water. Water used in mixing or curing shall be from potable water sources. Other sources shall be tested in accordance with ASTM C1602 prior to use.

610-2.7 Admixtures. Contractor shall submit certificates indicating that the material to be furnished meets all of the requirements indicated below. In addition, the RPR may require Contractor to submit complete test data from an approved laboratory showing that the material to be furnished meets all of the requirements of the cited specifications. Subsequent tests may be made of samples taken by the RPR from the supply of the material being furnished or proposed for use on the Work to determine whether the admixture is uniform in quality with that approved.

a. Air-entraining admixtures. Air-entraining admixtures shall meet the requirements of ASTM C260 and shall consistently entrain the air content in the specified ranges under field conditions. The air-entrainment agent and any water reducer admixture shall be compatible.

b. Water-reducing admixtures. Water-reducing admixture shall meet the requirements of ASTM C494, Type A, B, or D. ASTM C494, Type F and G high range water reducing admixtures and ASTM C1017 flowable admixtures shall not be used.

c. Other chemical admixtures. The use of set retarding and set-accelerating admixtures shall be approved by the RPR. Retarding shall meet the requirements of ASTM C494, Type A, B, or D and set-accelerating shall meet the requirements of ASTM C494, Type C. Calcium chloride and admixtures containing calcium chloride shall not be used.

610-2.8 Premolded joint material. Premolded joint material for expansion joints shall meet the requirements of ASTM D1751.

610-2.9 Joint filler. The filler for joints shall meet the requirements of Item P-605, unless otherwise specified.

610-2.10 Steel reinforcement. Reinforcing shall conform to the requirements of:

Steel Reinforcement

Reinforcing Steel	ASTM A615
Welded Steel Wire Fabric	ASTM A1064

610-2.11 Materials for curing concrete. Curing materials shall conform to any of the following:

Materials for Curing

Waterproof paper	ASTM C171
Clear or white Polyethylene Sheeting	ASTM C171
White-pigmented Liquid Membrane-Forming Compound, Type 2, Class B	ASTM C309

CONSTRUCTION METHODS

610-3.1 General. Contractor shall furnish all labor, materials, and services necessary for, and incidental to, the completion of all Work as shown on the Drawings and specified here. All machinery and equipment used by Contractor on the Work, shall be of sufficient size to meet the requirements of the Work. All Work shall be subject to the inspection and approval of the RPR.

610-3.2 Concrete Mixture. The concrete shall develop a compressive strength of 4,000 psi in 28 days as determined by test cylinders made in accordance with ASTM C31 and tested in accordance with ASTM C39. The concrete shall contain not less than 470 pounds of cementitious material per cubic yard. The water cementitious ratio shall not exceed 0.45 by weight. The air content of the concrete shall be 5% +/- 1.2% as determined by ASTM C231 and shall have a slump of not more than 4 inches as determined by ASTM C143.

610-3.3 Mixing. Concrete may be mixed at the construction site, at a central point, or wholly or in part in truck mixers. The concrete shall be mixed and delivered in accordance with the requirements of ASTM C94 or ASTM C685.

The concrete shall be mixed only in quantities required for immediate use. Concrete shall not be mixed while the air temperature is below 40°F without the RPRs approval. If approval is granted for mixing under such conditions, aggregates, or water, or both, shall be heated and the concrete shall be placed at a temperature not less than 50°F nor more than 100°F. Contractor shall be held responsible for any defective work, resulting from freezing or injury in any manner during placing and curing, and shall replace such work at his expense.

Retempering of concrete by adding water or any other material is not permitted.

The rate of delivery of concrete to the job shall be sufficient to allow uninterrupted placement of the concrete.

610-3.4 Forms. Concrete shall not be placed until all the forms and reinforcements have been inspected and approved by the RPR. Forms shall be of suitable material and shall be of the type, size, shape, quality, and strength to build the structure as shown on the Plans. The forms shall be true to line and grade and shall be mortar-tight and sufficiently rigid to prevent displacement and sagging between supports. The surfaces of forms shall be smooth and free from irregularities, dents, sags, and holes. Contractor shall be responsible for their adequacy.

The internal form ties shall be arranged so no metal will show in the concrete surface or discolor the surface when exposed to weathering when the forms are removed. All forms shall be wetted with water or with a non-staining mineral oil, which shall be applied immediately before the concrete is placed. Forms shall be constructed so they can be removed without injuring the concrete or concrete surface.

610-3.5 Placing reinforcement. All reinforcement shall be accurately placed, as shown on the plans, and shall be firmly held in position during concrete placement. Bars shall be fastened together at intersections. The reinforcement shall be supported by approved metal chairs. Shop drawings, lists, and bending details shall be supplied by Contractor when required.

610-3.6 Embedded items. Before placing concrete, all embedded items shall be firmly and securely fastened in place as indicated. All embedded items shall be clean and free from coating, rust, scale, oil, or any foreign matter. The concrete shall be spaded and consolidated around and against embedded items. The embedding of wood shall not be allowed.

610-3.7 Concrete Consistency. Contractor shall monitor the consistency of the concrete delivered to the Project Site; collect each batch ticket; check temperature; and perform slump tests on each truck at the project Site in accordance with ASTM C143.

610-3.8 Placing concrete. All concrete shall be placed during daylight hours, unless otherwise approved. The concrete shall not be placed until the depth and condition of foundations, the adequacy of forms and falsework, and the placing of the steel reinforcing have been approved by the RPR. Concrete shall be placed as soon as practical after mixing, but in no case later than one (1) hour after water has been added to the mix. The method and manner of placing shall avoid segregation and displacement of the reinforcement. Troughs, pipes, and chutes shall be used as an aid in placing concrete when necessary. The concrete shall not be dropped from a height of more than 5 feet. Concrete shall be deposited as nearly as practical in its final position to avoid segregation due to rehandling or flowing. Do not subject concrete to procedures which cause segregation. Concrete shall be placed on clean, damp surfaces, free from running water, or on a properly consolidated soil foundation.

610-3.9 Vibration. Vibration shall follow the guidelines in American Concrete Institute (ACI) Committee 309R, Guide for Consolidation of Concrete.

610-3.10 Joints. Joints shall be constructed as indicated on the Plans.

610-3.11 Finishing. All exposed concrete surfaces shall be true, smooth, and free from open or rough areas, depressions, or projections. All concrete horizontal plane surfaces shall be brought flush to the proper elevation with the finished top surface struck-off with a straightedge and floated.

610-3.12 Curing and protection. All concrete shall be properly cured in accordance with the recommendations in American Concrete Institute (ACI) 308R, Guide to External Curing of Concrete. The concrete shall be protected from damage until Project acceptance.

610-3.13 Cold weather placing. When concrete is placed at temperatures below 40°F, follow the cold weather concreting recommendations found in ACI 306R, Cold Weather Concreting.

610-3.14 Hot weather placing. When concrete is placed in hot weather greater than 85ºF, follow the hot weather concreting recommendations found in ACI 305R, Hot Weather Concreting.

QUALITY ASSURANCE (QA)

610-4.1 Quality Assurance sampling and testing. Concrete for each day's placement will be accepted on the basis of the compressive strength specified in Paragraph 610-3.2. The RPR will sample the concrete in accordance with ASTM C172; test the slump in accordance with ASTM C143; test air content in accordance with ASTM C231; make and cure compressive strength specimens in accordance with ASTM C31; and test in accordance with ASTM C39. The QA testing agency will meet the requirements of ASTM C1077.

Contractor shall provide adequate facilities for the initial curing of cylinders.

610-4.2 Defective work. Any defective work that cannot be satisfactorily repaired as determined by the RPR, shall be removed and replaced at Contractor's expense. Defective work includes, but is not limited to, uneven dimensions, honeycombing and other voids on the surface or edges of the concrete.

BID ITEM 12

610-5.1 Item P-610 shall not be paid directly, but is considered part of Bid Item 12 FAA MALSR cable reroute.

REFERENCES

The publications listed below form a part of this Specification to the extent referenced. The publications are referred to within the text by the basic designation only.

ASTM International (ASTM)

ASTM A184	Standard Specification for Welded Deformed Steel Bar Mats for Concrete Reinforcement
ASTM A615	Standard Specification for Deformed and Plain Carbon-Steel Bars for Concrete Reinforcement
ASTM A704	Standard Specification for Welded Steel Plain Bar or Rod Mats for Concrete Reinforcement
ASTM A706	Standard Specification for Low-Alloy Steel Deformed and Plain Bars for Concrete Reinforcement
ASTM A775	Standard Specification for Epoxy-Coated Steel Reinforcing Bars
ASTM A884	Standard Specification for Epoxy-Coated Steel Wire and Welded Wire Reinforcement
ASTM A934	Standard Specification for Epoxy-Coated Prefabricated Steel Reinforcing Bars
ASTM A1064	Standard Specification for Carbon-Steel Wire and Welded Wire Reinforcement, Plain and Deformed, for Concrete
ASTM C31	Standard Practice for Making and Curing Concrete Test Specimens in the Field
ASTM C33	Standard Specification for Concrete Aggregates

ASTM C39	Standard Test Method for Compressive Strength of Cylindrical Concrete Specimens
ASTM C94	Standard Specification for Ready-Mixed Concrete
ASTM C136	Standard Test Method for Sieve or Screen Analysis of Fine and Coarse Aggregates
ASTM C114	Standard Test Methods for Chemical Analysis of Hydraulic Cement
ASTM C136	Standard Test Method for Sieve Analysis of Fine and Coarse Aggregates
ASTM C143	Standard Test Method for Slump of Hydraulic-Cement Concrete
ASTM C150	Standard Specification for Portland Cement
ASTM C171	Standard Specification for Sheet Materials for Curing Concrete
ASTM C172	Standard Practice for Sampling Freshly Mixed Concrete
ASTM C231	Standard Test Method for Air Content of Freshly Mixed Concrete by the Pressure Method
ASTM C260	Standard Specification for Air-Entraining Admixtures for Concrete
ASTM C309	Standard Specification for Liquid Membrane-Forming Compounds for Curing Concrete
ASTM C311	Standard Test Methods for Sampling and Testing Fly Ash or Natural Pozzolans for Use in Portland-Cement Concrete
ASTM C494	Standard Specification for Chemical Admixtures for Concrete
ASTM C618	Standard Specification for Coal Fly Ash and Raw or Calcined Natural Pozzolan for Use in Concrete
ASTM C666	Standard Test Method for Resistance of Concrete to Rapid Freezing and Thawing
ASTM C685	Standard Specification for Concrete Made by Volumetric Batching and Continuous Mixing
ASTM C989	Standard Specification for Slag Cement for Use in Concrete and Mortars
ASTM C1017	Standard Specification for Chemical Admixtures for Use in Producing Flowing Concrete
ASTM C1077	Standard Practice for Agencies Testing Concrete and Concrete Aggregates for Use in Construction and Criteria for Testing Agency Evaluation
ASTM C1157	Standard Performance Specification for Hydraulic Cement
ASTM C1260	Standard Test Method for Potential Alkali Reactivity of Aggregates (Mortar-Bar Method)
ASTM C1365	Standard Test Method for Determination of the Proportion of Phases in Portland Cement and Portland-Cement Clinker Using X-Ray Powder Diffraction Analysis
ASTM C1602	Standard Specification for Mixing Water Used in the Production of Hydraulic Cement Concrete

ASTM D1751	Standard Specification for Preformed Expansion Joint Filler for Concrete Paving and Structural Construction (Nonextruding and Resilient Asphalt Types)
ASTM D1752	Standard Specification for Preformed Sponge Rubber Cork and Recycled PVC Expansion Joint Fillers for Concrete Paving and Structural Construction

American Concrete Institute (ACI)

ACI 305R	Hot Weather Concreting
ACI 306R	Cold Weather Concreting
ACI 308R	Guide to External Curing of Concrete
ACI 309R	Guide for Consolidation of Concrete

END OF ITEM P-610

Item P-620 Runway and Taxiway Marking

DESCRIPTION

620-1.1 This item shall consist of the preparation and painting of numbers, markings, and stripes on the surface of runways, taxiways, and aprons, in accordance with these specifications and at the locations shown on the plans, or as directed by the Resident Project Representative (RPR). The terms "paint" and "marking material" as well as "painting" and "application of markings" are interchangeable throughout this Specification.

MATERIALS

620-2.1 Materials acceptance. Contractor shall furnish manufacturer's certified test reports, for materials shipped to the Project. The certified test reports shall include a statement that the materials meet the Specification requirements. This certification along with a copy of the paint manufacturer's surface preparation; marking materials, including adhesion, flow promoting and/or floatation additive; and application requirements must be submitted and approved by the Resident Project Representative (RPR) prior to the initial application of markings. The reports can be used for material acceptance or the RPR may perform verification testing. The reports shall not be interpreted as a basis for payment. Contractor shall notify the RPR upon arrival of a shipment of materials to the site. All material shall arrive in sealed containers that are easily quantifiable for inspection by the RPR.

620-2.2 Marking materials.

Table 1. Marking Materials

Paint[1]				Glass Beads[2]	
Type	**Color**	**Fed Std. 595 Number**	**Application Rate Maximum**	**Type**	**Application Rate Minimum**
III	White	37925	90 sf/gal	III	8 lb/gal
	Yellow	33538 or 33655		III	8 lb/gal
	Black	37038		None	N/A
	Red	31136		1A	7 lb/gal

[1] **See Paragraph 620-2.2a.**

[2] **See Paragraph 620-2.2b.**

a. Paint. Paint shall be waterborne in accordance with the requirements of this Paragraph. Paint colors shall comply with Federal Standard No. 595.

Waterborne. Paint shall meet the requirements of Federal Specification TT-P-1952F, Type III. The non-volatile portion of the vehicle for all paint types shall be composed of a 100% acrylic polymer as determined by infrared spectral analysis. The acrylic resin used for Type III shall be 100% cross linking acrylic as evidenced by infrared peaks at wavelengths 1568, 1624, and 1672 cm-l with intensities equal to those produced by an acrylic resin known to be 100% cross linking.

b. Reflective media. Glass beads for white and yellow paint shall meet the requirements for Federal Specification TT-B-1325D Type III.

Glass beads for red and pink paint shall meet the requirements for Type I, Gradation A.

Glass beads shall be treated with all compatible coupling agents recommended by the manufacturers of the paint and reflective media to ensure adhesion and embedment.

Glass beads shall not be used in black and green paint.

Type III glass beads shall not be used in red and pink paint.

CONSTRUCTION METHODS

620-3.1 Weather limitations. Painting shall only be performed when the surface is dry, and the ambient temperature and the pavement surface temperature meet the manufacturer's recommendations in accordance with Paragraph 620-2.1. Painting operations shall be discontinued when the ambient or surface temperatures does not meet the manufacturer's recommendations. Markings shall not be applied when the wind speed exceeds 10 mph unless windscreens are used to shroud the material guns. Markings shall not be applied when weather conditions are forecasts to not be within the manufacturers' recommendations for application and dry time.

620-3.2 Equipment. Equipment shall include the apparatus necessary to properly clean the existing surface, a mechanical marking machine, a bead dispensing machine, and such auxiliary hand-painting equipment as may be necessary to satisfactorily complete the job.

The mechanical marker shall be an atomizing spray-type or airless type marking machine with automatic glass bead dispensers suitable for application of traffic paint. It shall produce an even and uniform film thickness and appearance of both paint and glass beads at the required coverage and shall apply markings of uniform cross-sections and clear-cut edges without running or spattering and without over spray. The marking equipment for both paint and beads shall be calibrated daily.

620-3.3 Preparation of surfaces. Immediately before application of the paint, the surface shall be dry and free from dirt, grease, oil, laitance, or other contaminates that would reduce the bond between the paint and the pavement. Use of any chemicals or impact abrasives during surface preparation shall be approved in advance by the RPR. After the cleaning operations, sweeping, blowing, or rinsing with pressurized water shall be performed to ensure the surface is clean and free of grit or other debris left from the cleaning process.

a. Preparation of new pavement surfaces. The area to be painted shall be cleaned by broom, blower, water blasting, or by other methods approved by the RPR to remove all contaminants, including PCC curing compounds, minimizing damage to the pavement surface.

b. Preparation of pavement to remove existing markings. Existing pavement markings shall be removed by water blasting. Removal shall minimize damage to the pavement surface. The removal area may need to be larger than the area of the markings to eliminate ghost markings. After removal of markings on asphalt pavements, apply a fog seal or seal coat to 'block out' the removal area to eliminate 'ghost' markings.

c. Preparation of pavement markings prior to remarking. Prior to remarking existing markings, loose existing markings must be removed minimizing damage to the pavement surface, with a method approved by the RPR. After removal, the surface shall be cleaned of all residue or debris.

Prior to the application of markings, Contractor shall certify in writing that the surface is dry and free from dirt, grease, oil, laitance, or other foreign material that would prevent the bond of the paint to the pavement or existing markings. This certification along with a copy of the paint manufactures application

and surface preparation requirements must be submitted to the RPR prior to the initial application of markings.

620-3.4 Layout of markings. The proposed markings shall be laid out in advance of the paint application. The locations of markings to receive glass beads shall be shown on the Plans.

620-3.5 Application. A period of **30** days shall elapse between placement of surface course or seal coat and application of the permanent paint markings. Paint shall be applied at the locations and to the dimensions and spacing shown on the Plans. Paint shall not be applied until the layout and condition of the surface has been approved by the RPR.

The edges of the markings shall not vary from a straight line more than 1/2 inch in 50 feet, and marking dimensions and spacing shall be within the following tolerances:

Marking Dimensions and Spacing Tolerance

Dimension and Spacing	Tolerance
36 inch or less	±1/2 inch
greater than 36 inch to 6 feet	±1 inch
greater than 6 feet to 60 feet	±2 inch
greater than 60 feet	±3 inch

The paint shall be mixed in accordance with the manufacturer's instructions and applied to the pavement with a marking machine at the rate shown in Table 1. The addition of thinner will not be permitted.

Glass beads shall be distributed upon the marked areas at the locations shown on the plans to receive glass beads immediately after application of the paint. A dispenser shall be furnished that is properly designed for attachment to the marking machine and suitable for dispensing glass beads. Glass beads shall be applied at the rate shown in Table 1. Glass beads shall not be applied to black paint or green paint. Glass beads shall adhere to the cured paint or all marking operations shall cease until corrections are made. Different bead types shall not be mixed. Regular monitoring of glass bead embedment and distribution should be performed.

620-3.6 Application--preformed thermoplastic airport pavement markings.

Preformed thermoplastic pavement markings not used.

620-3.7 Control strip. Prior to the full application of airfield markings, Contractor shall prepare a control strip in the presence of the RPR. Contractor shall demonstrate the surface preparation method and all striping equipment to be used on the Project. The marking equipment must achieve the prescribed application rate of paint and population of glass beads (per Table 1) that are properly embedded and evenly distributed across the full width of the marking. Prior to acceptance of the control strip, markings must be evaluated during darkness to ensure a uniform appearance.

620-3.8 Retro-reflectance. Reflectance shall be measured with a portable retro-reflectometer meeting ASTM E1710 (or equivalent). A total of 6 reading shall be taken over a 6 square foot area with 3 readings taken from each direction. The average shall be equal to or above the minimum levels of all readings which are within 30% of each other.

Minimum Retro-Reflectance Values

Material	Retro-reflectance mcd/m²/lux		
	White	Yellow	Red
Initial Type I	300	175	35
Initial Type III	600	300	35
Initial Thermoplastic	225	100	35
All materials, remark when less than[1]	100	75	10

[1] 'Prior to remarking determine if removal of contaminants on markings will restore retro-reflectance.

620-3.9 Protection and cleanup. After application of the markings, all markings shall be protected from damage until dry. All surfaces shall be protected from excess moisture and/or rain and from disfiguration by spatter, splashes, spillage, or drippings. Contractor shall remove from the work area all debris, waste, loose reflective media, and by-products generated by the surface preparation and application operations to the satisfaction of the RPR. Contractor shall dispose of these wastes in strict compliance with all applicable state, local, and federal environmental statutes and regulations.

METHOD OF MEASUREMENT

620-4.1a The quantity of surface preparation will not be measured.

620-4.1b The quantity of markings to be paid for shall be measured by the square foot.

620-4.1c The quantity of reflective media will not be measured.

620-4.1d The quantity of marking removal will not be measured.

BASIS OF PAYMENT

620-5.1 This price shall be full compensation for furnishing all materials and for all labor, equipment, tools, and incidentals necessary to complete the item complete in place and accepted by the RPR in accordance with these Specifications.

620-5.1a No direct payment will be made for surface preparation.

620-5.2b Payment for markings shall be made at the contract price for the number of square feet of painting.

620-5.3c No direct payment will be made for reflective media.

620-5.4d No direct payment will be made for marking removal.

Payment will be made under:

Item P-620-5.2b Marking, including reflective media per Specification, per square foot

REFERENCES

The publications listed below form a part of this Specification to the extent referenced. The publications are referred to within the text by the basic designation only.

ASTM International (ASTM)

ASTM D476	Standard Classification for Dry Pigmentary Titanium Dioxide Products
ASTM D968	Standard Test Methods for Abrasion Resistance of Organic Coatings by Falling Abrasive
ASTM D1652	Standard Test Method for Epoxy Content of Epoxy Resins
ASTM D2074	Standard Test Method for Total, Primary, Secondary, and Tertiary Amine Values of Fatty Amines by Alternative Indicator Method
ASTM D2240	Standard Test Method for Rubber Property - Durometer Hardness
ASTM D7585	Standard Practice for Evaluating Retroreflective Pavement Markings Using Portable Hand-Operated Instruments
ASTM E303	Standard Test Method for Measuring Surface Frictional Properties Using the British Pendulum Tester
ASTM E1710	Standard Test Method for Measurement of Retroreflective Pavement Marking Materials with CEN-Prescribed Geometry Using a Portable Retroreflectometer
ASTM E2302	Standard Test Method for Measurement of the Luminance Coefficient Under Diffuse Illumination of Pavement Marking Materials Using a Portable Reflectometer
ASTM G154	Standard Practice for Operating Fluorescent Ultraviolet (UV) Lamp Apparatus for Exposure of Nonmetallic Materials

Code of Federal Regulations (CFR)

40 CFR Part 60, Appendix A-7, Method 24	Determination of volatile matter content, water content, density, volume solids, and weight solids of surface coatings
29 CFR Part 1910.1200	Hazard Communication

Federal Specifications (FED SPEC)

FED SPEC TT-B-1325D	Beads (Glass Spheres) Retro-Reflective
FED SPEC TT-P-1952F	Paint, Traffic and Airfield Marking, Waterborne
FED STD 595	Colors used in Government Procurement

Commercial Item Description

A-A-2886B	Paint, Traffic, Solvent Based

Advisory Circulars (AC)

AC 150/5340-1	Standards for Airport Markings
AC 150/5320-12	Measurement, Construction, and Maintenance of Skid Resistant Airport Pavement Surfaces

END OF ITEM P-620

PACKET 14.287 September 24, 2024

Item T-901 Seeding

DESCRIPTION

901-1.1 This item shall consist of soil preparation, seeding and fertilizing the areas shown on the Plans or as directed by Engineer in accordance with these specifications. Areas of soil preparation, seeding and fertilizing under this item shall include, but not be limited to, unpaved areas within the limits of grading as shown on the plans or as designated by Engineer, any areas of existing turf disturbed during construction, excavated areas, Contractor haul routes or travel paths, and Contractor plant and office areas, and stockpile areas.

MATERIALS

901-2.1 Seed. The species and application rates of grass, legume, and cover-crop seed furnished shall be those stipulated herein. Seed shall conform to the requirements of Federal Specification JJJ-S-181, Federal Specification, Seeds, Agricultural.

Seed shall be furnished separately or in mixtures in standard containers labeled in conformance with the Agricultural Marketing Service (AMS) Seed Act and applicable state seed laws with the seed name, lot number, net weight, percentages of purity and of germination and hard seed, and percentage of maximum weed seed content clearly marked for each kind of seed. Contractor shall furnish Engineer duplicate signed copies of a statement by the vendor certifying that each lot of seed has been tested by a recognized laboratory for seed testing within six months of date of delivery. This statement shall include name and address of laboratory, date of test, lot number for each kind of seed, and the results of tests as to name, percentages of purity and of germination, and percentage of weed content for each kind of seed furnished, and, in case of a mixture, the proportions of each kind of seed. Wet, moldy, or otherwise damaged seed will be rejected. For this Project, two seed mixes will be planted together - the cool or warm season mix as determined by the planting time, and the Permanent Seed Mixture shown herein:

Quantity of Pure Live Seed[1] (option 3)

Seed Mixture for Cool Season Seeding (Sept.1-Nov. 30)	
Common Name	**Mixture Quantity**
Western Wheatgrass	8.4 PLS/acre
Wheat (red, winter)	50.0 PLS/acre
Seed Mixture for Warm Season Seeding (May 1-Aug. 31)	
Buffalo Grass-Treated	34.0 PLS/acre
Permanent Seed Mixture (Optimum Feb 1 – May 15)	
Green Sprangletop	0.3 PLS/acre
Blue Grama	0.8 PLS/acre
Sand Dropseed	0.4 PLS/acre
Weeping Lovegrass	0.6 PLS/acre
Indian Ricegrass	3.0 PLS/acre
Purple Prairie Clover	0.5 PLS/acre

[1]Payment not made for soil preparation, seeding, and fertilizing prior to planting and establishing stand of grass covering a minimum of 70% of the seeded area in comparison to the surrounding grassed area.

Seeding shall be performed during such periods as recommended by the local County Extension Agent or USDA Soil Conservation Services and shall be compatible with local climate and soil conditions. Seeding shall also be performed as early as possible in the Project to maximize the growing season.

If construction completion does not coincide with a recommended planting period, Contractor shall be responsible for maintaining the areas to be seeded in accordance with Item C-102 Temporary Air and Water Pollution, Soil Erosion, and Siltation Control, until the accepted stand of grass is produced. Contractor attention is also directed to the 70% vegetative cover requirement indicated by the definition of Final Stabilization in the TPDES Construction General Permit (TXR 150000).

901-2.2 Lime. Not required.

901-2.3 Fertilizer. Fertilizer shall be standard commercial fertilizers supplied separately or in mixtures containing the percentages of total nitrogen, available phosphoric acid, and water-soluble potash. They shall be applied at the rate and to the depth specified and shall meet the requirements of applicable state laws. All fertilizer shall be delivered in bags or clearly marked containers showing the analysis, name, trademark, and warranty. They shall be furnished in standard containers with name, weight, and guaranteed analysis of contents clearly marked thereon. No cyanamide compounds or hydrated lime shall be permitted in mixed fertilizers.

The fertilizers may be supplied in one of the following forms:

a. A dry, free-flowing fertilizer suitable for application by a common fertilizer spreader;

b. A finely-ground fertilizer soluble in water, suitable for application by power sprayers; or

c. A granular or pellet form suitable for application by blower equipment.

d. Fertilizers shall have an analysis of 15-15-15 (representing respective percentages of nitrogen, phosphoric acid, and potash) as determined by the Association of Official Agricultural Chemists

e. Commercial fertilizer and shall be spread at the rate of 500 pounds per acre**.**

f. The actual rate of application shall be as recommended by the fertilizer manufacturer for the seed planted and allowing for local soil conditions and shall be approved by Engineer prior to application.901-2.4 Soil for repairs. The soil for fill and topsoiling of areas to be repaired shall be at least of equal quality to that which exists in areas adjacent to the area to be repaired. The soil shall be relatively free from large stones, roots, stumps, or other materials that will interfere with subsequent sowing of seed, compacting, and establishing turf, and shall be approved by Engineer before being placed.

CONSTRUCTION METHODS

901-3.1 Advance preparation and cleanup. After grading of areas has been completed and before applying fertilizer and ground limestone, areas to be seeded shall be raked or otherwise cleared of stones larger than 2 inches in any diameter, sticks, stumps, and other debris that might interfere with sowing of seed, growth of grasses, or subsequent maintenance of grass-covered areas. If any damage by erosion or other causes has occurred after the completion of grading and before beginning the application of fertilizer and ground limestone, Contractor shall repair such damage include filling gullies, smoothing irregularities, and repairing other incidental damage.

An area to be seeded shall be considered a satisfactory seedbed without additional treatment if it has recently been thoroughly loosened and worked to a depth of not less than 5 inches as a result of grading operations and, if immediately prior to seeding, the top 3 inches of soil is loose, friable, reasonably free from large clods, rocks, large roots, or other undesirable matter, and if shaped to the required grade.

When the area to be seeded is sparsely sodded, weedy, barren, and unworked, or packed and hard, any grass and weeds shall first be cut or otherwise satisfactorily disposed of, and the soil then scarified or otherwise loosened to a depth not less than 5 inches. Clods shall be broken and the top 3 inches of soil shall be worked into a satisfactory seedbed by discing, or by use of cultipackers, rollers, drags, harrows, or other appropriate means.

901-3.2 Dry application method.

a. Liming. Not required.

b. Fertilizing. Following advance preparations and cleanup fertilizer shall be uniformly spread at the rate that will provide not less than the minimum quantity stated in Paragraph 901-2.3.

c. Seeding. Grass seed shall be sown at the rate specified in Paragraph 901-2.1 immediately after fertilizing. The fertilizer and seed shall be raked within the depth range stated in the special provisions. Seeds of legumes, either alone or in mixtures, shall be inoculated before mixing or sowing, in accordance with the instructions of the manufacturer of the inoculant. When seeding is required at other than the seasons shown on the plans or in the special provisions, a cover crop shall be sown by the same methods required for grass and legume seeding.

d. Rolling. After the seed has been properly covered, the seedbed shall be immediately compacted by means of an approved lawn roller, weighing 40 to 65 pounds per foot of width for clay soil (or any soil having a tendency to pack), and weighing 150 to 200 pounds per foot of width for sandy or light soils.

e. Emulsion. After the seed has been planted, Item P-603 Asphalt Soil Stabilization shall be applied to the seeded area to hold the soil.

901-3.3 Wet application method.

a. General. Contractor may elect to apply seed and fertilizer (and lime, if required) by spraying them on the previously prepared seedbed in the form of an aqueous mixture and by using the methods and equipment described herein. The rates of application shall be as specified in the special provisions.

b. Spraying equipment. Spraying equipment shall have a container or water tank equipped with a liquid level gauge calibrated to read in increments no larger than 50 gallons over entire range of tank capacity, mounted to be visible to nozzle operator. Container or tank shall also be equipped with a mechanical power-driven agitator able to always keep all solids in mixture in complete suspension until used.

The unit shall also be equipped with a pressure pump capable of delivering 100 gallons per minute at a pressure of 100 lb/sq inches. The pump shall be mounted in a line that will recirculate the mixture through the tank whenever it is not being sprayed from the nozzle. All pump passages and pipelines shall be capable of providing clearance for 5/8 inch solids. The power unit for the pump and agitator shall have controls mounted to be accessible to the nozzle operator. There shall be an indicating pressure gauge connected and mounted immediately at the back of the nozzle.

The nozzle pipe shall be mounted on an elevated supporting stand in such a manner that it can be rotated through 360 degrees horizontally and inclined vertically from at least 20 degrees below to at least 60 degrees above the horizontal. There shall be a quick-acting, three-way control valve connecting the recirculating line to the nozzle pipe and mounted so that the nozzle operator can control and regulate the amount of flow of mixture delivered to the nozzle. At least three different types of nozzles shall be supplied so that mixtures may be properly sprayed over distance varying from 20 to 100 feet. One shall be a close-range ribbon nozzle, one a medium-range ribbon nozzle, and one a long-range jet nozzle. For case of removal and cleaning, all nozzles shall be connected to the nozzle pipe by means of quick-release couplings.

To reach areas inaccessible to the regular equipment, an extension hose at least 50 feet in length shall be provided to which the nozzles may be connected.

c. Mixtures. Seed and fertilizer shall be mixed together in the relative proportions specified, but not more than a total of 220 pounds of these combined solids shall be added to and mixed with each 100 gallons of water.

All water used shall be obtained from fresh water sources and shall be free from injurious chemicals and other toxic substances harmful to plant life. Contractor shall identify to Engineer all sources of water at least two weeks prior to use. Engineer may take samples of the water at the source or from the tank at any time and have a laboratory test the samples for chemical and saline content. Contractor shall not use any water from any source that is disapproved by Engineer following such tests.

All mixtures shall be constantly agitated from the time they are mixed until they are finally applied to the seedbed. All such mixtures shall be used within two hours from the time they were mixed or they shall be wasted and disposed of at approved locations.

d. Spraying. Mixtures of seed and fertilizer shall only be sprayed upon previously prepared seedbeds on which the lime, if required, shall already have been worked in. The mixtures shall be applied by means of a high-pressure spray that shall always be directed upward into the air so that the mixtures will fall to the ground like rain in a uniform spray. Nozzles or sprays shall never be directed toward the ground in such a manner as might produce erosion or runoff.

Ensure application is made uniformly and at the prescribed rate and to guard against misses and overlapped areas. Proper predetermined quantities of the mixture in accordance with specifications shall be used to cover specified sections of known area.

Checks on the rate and uniformity of application may be made by observing the degree of wetting of the ground or by distributing test sheets of paper or pans over the area at intervals and observing the quantity of material deposited thereon.

On surfaces that are to be mulched as indicated by the plans or designated by Engineer, seed and fertilizer applied by the spray method need not be raked into the soil or rolled. However, on surfaces on which mulch is not to be used, the raking and rolling operations will be required after the soil has dried.

901-3.4 Maintenance of seeded areas. Contractor shall protect seeded areas against traffic or other use by warning signs or barricades, as approved by Engineer. Surfaces gullied or otherwise damaged following seeding shall be repaired by regrading and reseeding as directed. Contractor shall mow, water as directed, and otherwise maintain seeded areas in a satisfactory condition until final inspection and acceptance of the work.

When either the dry or wet application method outlined above is used for work done out of season, it will be required that Contractor establish a good stand of grass of uniform color and density to the satisfaction of Engineer. A grass stand shall be considered adequate when bare spots are one square foot or less, randomly dispersed, and do not exceed 3% of the area seeded.

Contractor shall be responsible for watering and maintaining seeded areas for a minimum 45 calendar days after seeding, and until establishing an acceptable stand of grass, unless otherwise directed by Engineer. The maintenance of the seeded areas may also require additional seeding to provide required stand of grass for acceptance. Such additional seeding, if required, shall be at Contractor expense.

METHOD OF MEASUREMENT

901-4.1 The final quantity of soil preparation, seeding, and fertilizing shall be the number of acres measured on the ground, completed, and accepted.

BASIS OF PAYMENT

901-5.1 Payment shall be made at the contract unit price per seeding and fertilizing or fraction thereof, which price and payment shall be full compensation for furnishing and placing all material and for all labor, equipment, tools, and incidentals necessary to complete the work prescribed in this item.

Item 901-5.1 Seeding, complete, per acre

REFERENCES

The publications listed below form a part of this specification to the extent referenced. The publications are referred to within the text by the basic designation only.

ASTM International (ASTM)

ASTM C602 Standard Specification for Agricultural Liming Materials

Federal Specifications (FED SPEC)

FED SPEC JJJ-S-181, Federal Specification, Seeds, Agricultural

Advisory Circulars (AC)

AC 150/5200-33 Hazardous Wildlife Attractants on or Near Airports

FAA/United States Department of Agriculture

Wildlife Hazard Management at Airports, A Manual for Airport Personnel

END OF ITEM T-901

Item T-905 Topsoil

DESCRIPTION

905-1.1 This item shall consist of preparing the ground surface for topsoil application, removing topsoil from designated stockpiles or areas to be stripped on the site or from approved sources off the site, and placing and spreading the topsoil on prepared areas in accordance with this Specification at the locations shown on the Plans or as directed by the RPR.

MATERIALS

905-2.1 Topsoil. Topsoil shall be the surface layer of soil with no admixture of refuse or any material toxic to plant growth, and it shall be reasonably free from subsoil and stumps, roots, brush, stones (2 inches or more in diameter), and clay lumps or similar objects. Brush and other vegetation that will not be incorporated with the soil during handling operations shall be cut and removed. Ordinary sod and herbaceous growth such as grass and weeds are not to be removed but shall be thoroughly broken up and intermixed with the soil during handling operations. Heavy sod or other cover, which cannot be incorporated into the topsoil by discing or other means, shall be removed. The topsoil or soil mixture, unless otherwise specified or approved, shall have a pH range of approximately 5.5 pH to 7.6 pH, when tested in accordance with the methods of testing of the Association of Official Agricultural Chemists in effect on the date of invitation of bids. The organic content shall be not less than 3% nor more than 20% as determined by the wet-combustion method (chromic acid reduction). There shall be not less than 20% nor more than 80% of the material passing the 200 mesh (75 μm) sieve as determined by the wash test in accordance with ASTM C117.

Natural topsoil may be amended by Contractor with approved materials and methods to meet the above Specifications.

905-2.2 Inspection and tests. Within 10 days following acceptance of the bid, the RPR shall be notified of the source of topsoil to be furnished by Contractor. The topsoil shall be inspected to determine if the selected soil meets the requirements specified and to determine the depth to which stripping will be permitted. At this time, Contractor may be required to take representative soil samples from several locations within the area under consideration and to the proposed stripping depths, for testing purposes as specified in Paragraph 905-2.1.

CONSTRUCTION METHODS

905-3.1 General. Areas to be topsoiled shall be shown on the Plans. If topsoil is available on the site, the location of the stockpiles or areas to be stripped of topsoil and the stripping depths shall be shown on the Plans.

Suitable equipment necessary for proper preparation and treatment of the ground surface, stripping of topsoil, and for the handling and placing of all required materials shall be on hand, in good condition, and approved by the RPR before the various operations are started.

905-3.2 Preparing the ground surface. Immediately prior to dumping and spreading the topsoil on any area, the surface shall be loosened by discs or spike-tooth harrows, or by other means approved by the RPR, to a minimum depth of 2 inches to facilitate bonding of the topsoil to the covered subgrade soil. The surface

of the area to be topsoiled shall be cleared of all stones larger than 2 inches in any diameter and all litter or other material which may be detrimental to proper bonding, the rise of capillary moisture, or the proper growth of the desired planting. Limited areas, as shown on the Plans, which are too compact to respond to these operations shall receive special scarification.

Grades on the area to be topsoiled, which have been established by others as shown on the Plans, shall be maintained in a true and even condition. Where grades have not been established, the areas shall be smooth-graded and the surface left at the prescribed grades in an even and compacted condition to prevent the formation of low places or pockets where water will stand.

905-3.3 Obtaining topsoil. This item shall be accomplished by excavating approximately 4 inches of existing topsoil from the grading limits and stockpiling such material temporarily near the work site in areas approved by the RPR. At the completion of the unpaved site-grading the ground surface shall be left 4 inches below the finish plan elevations. Then the stockpiled topsoil shall be respread onto the newly graded work area. Prior to the stripping of topsoil from designated areas, any vegetation, briars, stumps and large roots, rubbish or stones found on such areas, which may interfere with subsequent operations, shall be removed using methods approved by the RPR. Heavy sod or other cover, which cannot be incorporated into the topsoil by discing or other means shall be removed.

When suitable topsoil is available on the site, Contractor shall remove this material from the designated areas and to the depth as directed by the RPR. The topsoil shall be spread on areas already tilled and smooth-graded or stockpiled in areas approved by the RPR. Any topsoil stockpiled by Contractor shall be rehandled and placed without additional compensation. Any topsoil that has been stockpiled on the site by others, and is required for topsoil purposes, shall be removed, and placed by Contractor. The sites of all stockpiles and areas adjacent thereto which have been disturbed by Contractor shall be graded if required and put into a condition acceptable for seeding.

When suitable topsoil is secured off the airport site, Contractor shall locate and obtain the supply, subject to the approval of the RPR. Contractor shall notify the RPR sufficiently in advance of operations in order that necessary measurements and tests can be made. Contractor shall remove the topsoil from approved areas and to the depth as directed. The topsoil shall be hauled to the site of the work and placed for spreading or spread as required. Any topsoil hauled to the site of the work and stockpiled shall be rehandled and placed without additional compensation.

905-3.4 Placing topsoil. The topsoil shall be evenly spread on the prepared areas to a typical 4 inch thickness at the Runways 10 and 16R work areas and a variable thickness at the Runway 34L work area to accomplish the planned grading. These thicknesses shall be after compaction, unless otherwise shown on the Plans or stated in the Special Provisions. Spreading shall not be done when the ground or topsoil is frozen, excessively wet, or otherwise in a condition detrimental to the Work. Spreading shall be carried on so that turfing operations can proceed with a minimum of soil preparation or tilling.

After spreading, any large, stiff clods and hard lumps shall be broken with a pulverizer or by other effective means, and all stones or rocks (2 inches or more in diameter), roots, litter, or any foreign matter shall be raked up and disposed of by Contractor. After spreading is completed, the topsoil shall be satisfactorily compacted by rolling with a cultipacker or by other means approved by the RPR. The compacted topsoil surface shall conform to the required lines, grades, and cross-sections. Any topsoil or other dirt falling upon pavements as a result of hauling or handling of topsoil shall be promptly removed.

METHOD OF MEASUREMENT

905-4.1 Topsoil obtained from each work site shall be measured by the number of square yards of topsoil measured in its final position on-site and at a 4-inch thickness.

905-4.2 Topsoil obtained off the site shall be measured by the number of cubic yards of topsoil measured in its final position on-site. Topsoil shall be measured by volume in cubic yards computed by the method of end areas.

BASIS OF PAYMENT

905-5.1 Payment will be made at the contract unit price per square yard for topsoil obtained on each site. This price shall be full compensation for furnishing all materials and for all preparation, excavation, stockpiling, placing, and spreading of the materials, and for all labor, equipment, tools, and incidentals necessary to complete the item.

905-5.2 Payment will be made at the contract unit price per cubic yard for topsoil obtained off the site. This price shall be full compensation for furnishing all materials and for all preparation, hauling, placing, and spreading of the materials, and for all labor, equipment, tools, and incidentals necessary to complete the item.

Payment will be made under:

Item T-905-5.1	Topsoil Obtained from Site of Runways 10 and 16R work areas, per square yard
Item T-905-5.2	Topsoil Obtained from Off the Airport for filling Runway 34L work area, per cubic yard

REFERENCES

The publications listed below form a part of this Specification to the extent referenced. The publications are referred to within the text by the basic designation only.

ASTM International (ASTM)

ASTM C117	Materials Finer than 75 μm (No. 200) Sieve in Mineral Aggregates by Washing

Advisory Circulars (AC)

AC 150/5200-33	Hazardous Wildlife Attractants on or Near Airports

FAA/United States Department of Agriculture

Wildlife Hazard Management at Airports, A Manual for Airport Personnel

END OF ITEM T-905

APPENDIX A

GEOTECHNICAL REPORT

W. C. HAMILTON ENGINEERING, INC.

GEOTECHNICAL INVESTIGATION

RUNWAY BLAST PADS IMPROVEMENTS

MIDLAND INTERNATIONAL AIR & SPACE PORT

MIDLAND, TEXAS

PACKET 14.297 September 24, 2024

(BACK OF FRONT COVER)

P. O. Box 61307 Midland, TX 79711-1307 (432) 550-5866 FAX (432) 550-5899
bill@wchamiltonengr.com

GEOTECHNICAL INVESTIGATION
RUNWAY BLAST PADS IMPROVEMENTS
MIDLAND INTERNATIONAL AIR & SPACE PORT
MIDLAND, TEXAS

prepared for

MR. LARRY G. BELL, P.E.

PARKHILL

MIDLAND, TEXAS

NOVEMBER 18, 2022

PROJECT NO. 14341022

prepared by



William C. Hamilton, P.E.
Vice-President

TABLE OF CONTENTS

PAGE

INTRODUCTION
General 1
Subsurface Exploration 1
Laboratory Testing 2
Summary 3

SUBSURFACE MATERIALS AND CONDITIONS
Stratification 4
Material Characteristics 4
Subsurface Water Conditions 4

OTHER DESIGN CONSIDERATIONS
Other Design Values 5

LIMITATIONS OF THIS INVESTIGATION 6

APPENDIXES

GEOTECHNICAL INVESTIGATION

RUNWAY BLAST PADS IMPROVEMENTS

MIDLAND INTERNATIONAL AIR & SPACE PORT

MIDLAND, TEXAS

INTRODUCTION

General: This geotechnical investigation at the site of existing blast pads at the Midland International Air & Space Port in Midland, Texas, was authorized by signed agreement on September 15, 2022, by Mr. Danny G. Winchester, P.E., Firm Principal, Parkhill, Midland, Texas, and was performed in general accordance with our letter proposal dated September 13, 2022.

Plans call for reconstructing the Runway 16R blast pad and removal of the Runway 34L concrete blast pad. The purpose of this investigation has been to determine the subsurface soil properties and strengths for the proposed improvements.

The site is located on the east side of the of the existing Midland International Air & Space Port terminal building. The runway runs north-south with 16R on the north end and 34L on the south end. The general location of the site is shown on the aerial photographs on Plates I and II in Appendix A.

Subsurface Exploration: Subsurface materials at the site were explored by a total of four borings at locations selected by Parkhill personnel. Borings B-1, B-2, and B-3 were drilled for Runway 16R and B-4 was drilled for Runway 34L. The borings were drilled to a maximum depth of 10.0 feet. The approximate boring locations are shown on Plate I in Appendix A. Field drilling operations were completed with the plugging of the holes on October 20, 2022.

The borings were advanced using continuous sampling techniques. At the direction of the geotechnical engineer, the materials were monitored during the drilling operations for any signs of physical changes in the materials. Thicknesses of pavement sections were obtained from each boring and are reported on the Logs of Boring. An auger bit was used to advance each boring the entire depth of the hole. These samples were visually examined, identified, wrapped and sealed in plastic, when appropriate, and placed in core boxes for transportation to the laboratory.

The Standard Penetration (SPT) Test, ASTM D1586, was conducted at various intervals of depth during the exploration to aid in strength evaluations. This test procedure drops a 140 pound hammer from a height of 30 inches to advance a split barrel drive point. Depending on the resistance of the materials to penetration by the drive point, either the number of blows required to advance the drive point 12 inches, 50 blows resulting in six inches or less penetration, or the inches of penetration due to 100 blows is recorded. Results of the SPT tests are shown on the left-hand side of the Logs of Boring. The SPT samples were visually examined, identified, and wrapped and sealed in plastic for transportation to the laboratory.

Samples obtained from the field operations that were not utilized in the laboratory testing will be stored for 30 days from the date of this report. After that time they will be discarded unless written notification is received.

Laboratory Testing: The soil samples were returned to the laboratory where they were re-examined and the visual classifications checked by the geotechnical engineer. Selected specimens were chosen for testing to identify their soil classifications and natural moisture contents. The specific tests conducted are summarized as follows:

- Atterberg Limits Tests
- Percent Passing No. 200 Sieve Tests
- Natural Moisture Content Tests

The Atterberg Limits tests, percent passing No. 200-mesh sieve tests, and natural moisture content tests were used to evaluate the basic engineering properties of the soil. The results of these tests and the classifications of the subsurface materials are shown in the summary on Plate III in Appendix A. The soil classifications refer to the Unified Soil Classification System.

Summary: The results from the field exploration and the laboratory investigation are contained in the Appendixes.

SUBSURFACE MATERIALS AND CONDITIONS

Stratification: Specific types and depths of the subsurface strata encountered in the borings are shown on the attached Logs of Boring in Appendix B. In general, the subsurface materials encountered from the ground surface down consisted of:

Stratum I	Pavement Section comprised of: *B-1 and B-2*: 5.5 to 6.0 inches of Hot Mix Asphaltic Concrete (HMAC) and 1.0 to 1.5 inches of base material *B-3*: No Pavement Section *B-4*: 6.0 inches of Concrete and 2.0 inches of base material
Stratum II	Dark Brown CLAYEY SAND with some Calcareous Particles 3.8 to 5.0 feet in thickness (B-3 and B-4 terminated in this stratum at their maximum depth of 5.0 feet)
Stratum III	Tan SANDY LEAN CLAY with some Calcareous Particles at least to the bottoms of B-1 and B-2

Material Characteristics: The results of the SPT tests indicate that the CLAYEY SANDS with some calcareous particles were loose to dense in relative density. The SANDY LEAN CLAYS with some calcareous particles were medium stiff in consistency.

Subsurface Water Conditions: The borings were advanced to a depth of up to 10.0 feet using dry sampling techniques. Groundwater was not encountered in the borings during the geotechnical drilling operations. Notes on groundwater observations are contained on the Logs of Boring in Appendix B.

Be aware that these limited observations do not represent a groundwater study which was beyond the scope of this investigation, and that due to the nature of subsurface water and its relationship to climatic influences, the groundwater may be intermittent and of varying quantities and depths due to changes in the seasonal moisture content.

OTHER DESIGN CONSIDERATIONS

Other Design Values: Based on the results of the plasticity index tests, sieve analyses, and correlations of the results with similar materials, the following are recommended design values for the properties of the on-site materials:

Angle of Internal Friction (Ø):	CLAYEY SANDS:	15°
	SANDY LEAN CLAYS:	10°
Modulus of Subgrade Reaction for Mats and Concrete Pavements (pci):		
	Runway 16R:	250
	Runway 34L:	270
Ultimate Friction Factor between Soil and Base Concrete:	(Unformed) 0.4 to 0.5	
	(Formed) 0.3	
Unit Weight of Soil, pounds per cubic foot:		
	CLAYEY SANDS:	115
	SANDY LEAN CLAYS:	105

LIMITATIONS OF THIS INVESTIGATION

This report has been prepared based on a specific site and specific use and was authorized and performed under a signed contract with a scope of services negotiated for the specific project. Others not signature to the contract are responsible for their own due diligence. The use or reliance of this report by others constitutes their acceptance of the terms and conditions of the original contract (provided upon written request).

The geotechnical engineer must be consulted prior to this report being used for other than the specific project and use for which this report was written. Also, the geotechnical engineer must be consulted should the project scope change after publication of this report.

The subsurface materials and conditions are known only at the specific boring locations and within the depths explored. Subsurface conditions have been extrapolated based on known conditions in the borings, and actual field conditions elsewhere at the site may differ from those described in this report due to geological, prior use, or other factors. For this reason, we recommend that the geotechnical engineer be retained through the construction phase to include plan review and to identify variations in subsurface materials and conditions and to confirm that the recommendations contained in this report are applicable to subsurface conditions encountered elsewhere on this site.

This report should not be copied without permission of the geotechnical engineer. When copied with his/her permission, the report should be copied in its entirety and in no case should the boring logs be separated from the body of the report.

It is recommended that the construction materials testing laboratory shall meet the basic requirements of ASTM E329, but as a minimum shall have demonstrated satisfactory performance in the AASHTO Materials Reference Laboratory Proficiency Sample Program in soils and concrete.

APPENDIX A

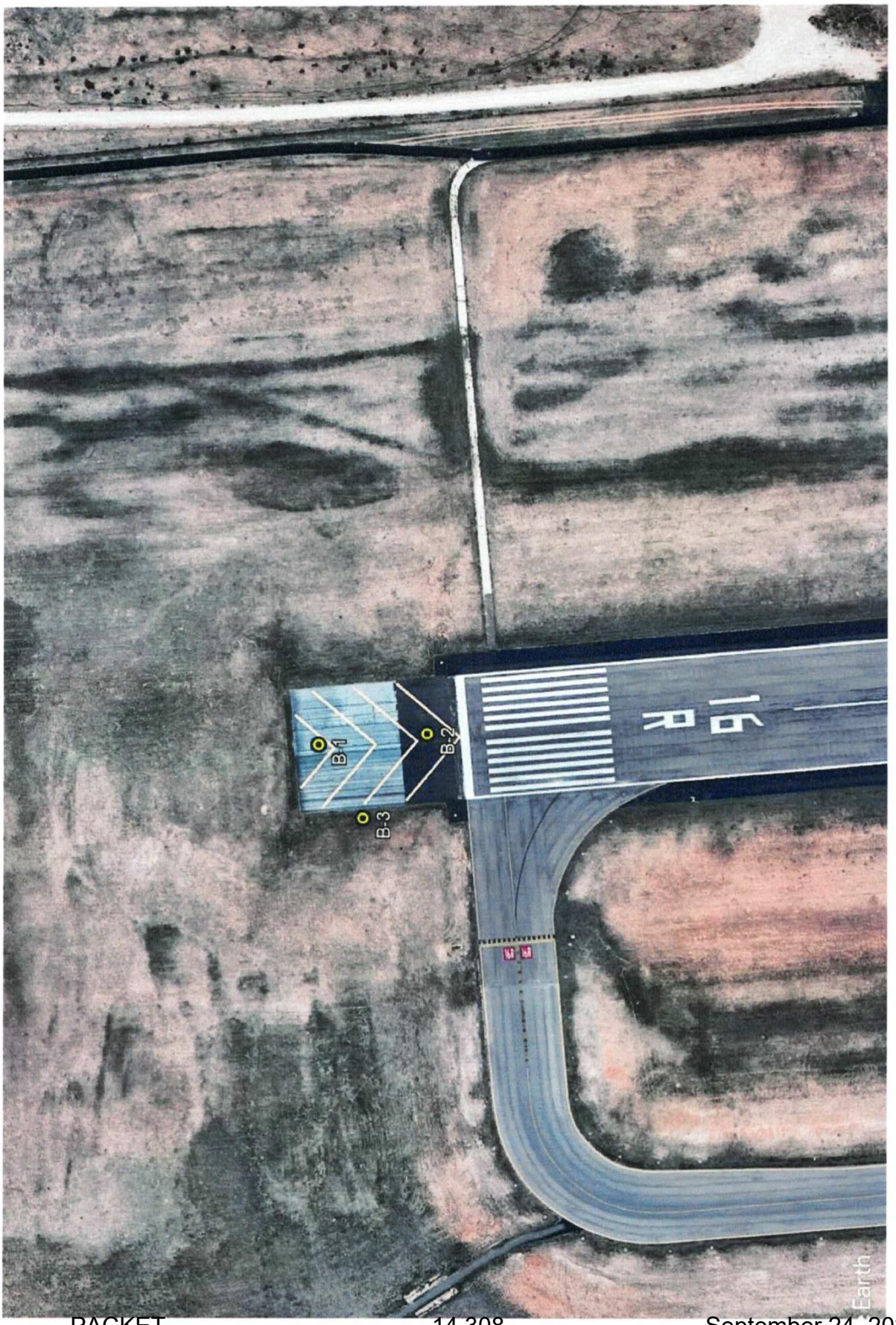

PLATE I

Project No. 14341022

Runway Blast Pads Improvements, RWY 16R
Midland International Air & Space Port, Midland, Texas

SITE VICINITY MAP AND APPROX. BORING LOCATIONS

PACKET 14.309 September 24, 2024



SITE VICINITY MAP AND APPROX. BORING LOCATIONS	Project No. 14341022 Runway Blast Pads Improvements, RWY 34L Midland International Air & Space Port, Midland, Texas	**PLATE II**

W. C. HAMILTON ENGINEERING, INC.
Texas Registered Engineering Firm F-3724

SUMMARY OF SOIL CLASSIFICATION TEST RESULTS

Boring/ Test Pit Number	*Depth in Feet*	*Liquid Limit %*	*Plasticity Index %*	*% Passing 200-mesh Sieve*	*Natural Moisture Content %*	*Classi-fication*	*Material Description*
B-1	1.0-2.5	25	10	44.3	18.2	SC	Dark Brown CLAYEY SAND w/some Calcareous Part.
B-1	5.0-6.5	43	22	59.5	16.9	CL	Tan SANDY LEAN CLAY w/some Calcareous Part.
B-2	2.5-4.0	26	13	47.0	14.1	SC	Dark Brown CLAYEY SAND w/some Calcareous Part.
B-2	9.0-10.5	26	12	62.5	12.5	CL	Tan SANDY LEAN CLAY w/some Calcareous Part.
B-3	1.0-2.5	25	11	40.2	9.9	SC	Dark Brown CLAYEY SAND w/some Calcareous Part.
B-4	1.0-2.5	22	8	36.0	15.0	SC	Dark Brown CLAYEY SAND w/some Calcareous Part.

B-1 through B-3: Runway 16R
B-4: Runway 34L

TEST RESULTS	Project No. 14341022 Runway Blast Pads Improvements Midland International Air & Space Port Midland, Texas	**PLATE III**

APPENDIX B

DEPTH FEET	SYMBOL	SAMPLE	TEST	MATERIAL DESCRIPTION	UDWpcf	UCtsf	MC	LL	PI	%-200	SOIL CLASS
				Pavement Section (5.5" HMAC; 1.5" Base)							
			6	Dark Brown CLAYEY SAND with some Calcareous Particles			18.2	25	10	44.3	SC
			11								
5											
			18	Tan SANDY LEAN CLAY with some Calcareous Particles			16.9	43	22	59.5	CL
10			50	= 4"							
				Total Depth of Boring = 10.0 Feet							
15											
20											
25											
30											
35											
40											

Groundwater Note: The boring was advanced to a depth of 10.0 feet below the ground surface without using drilling fluid and groundwater was not encountered above that depth.

LOG OF BORING	Project No. 14341022 Blast Pad Improvements, RWY 16R MAF, Midland, Texas	Date: 10-20-2022	Type: Auger	BORING NO. B-1

DEPTH FEET	SYMBOL	SAMPLE	TEST	MATERIAL DESCRIPTION	UDWpcf	UCtsf	MC	LL	PI	%-200	SOIL CLASS
				Pavement Section (6" HMAC; 1" Base)							
			12	Dark Brown CLAYEY SAND							
			14	with some Calcareous Particles			14.1	26	13	47.0	SC
5											
			14								
				Tan SANDY LEAN CLAY							
				with some Calcareous Particles							
10			19				12.5	26	12	62.5	CL
				Total Depth of Boring = 10.0 Feet							
15											
20											
25											
30											
35											
40											

Groundwater Note: The boring was advanced to a depth of 10.0 feet below the ground surface without using drilling fluid and groundwater was not encountered above that depth.

LOG OF BORING	Project No. 14341022 Blast Pad Improvements, RWY 16R MAF, Midland, Texas	Date: 10-20-2022	Type: Auger	BORING NO. B-2

DEPTH FEET	SYMBOL	SAMPLE	TEST	MATERIAL DESCRIPTION	UDWpcf	UCtsf	MC	LL	PI	%-200	SOIL CLASS	
5			24 40	Dark Brown CLAYEY SAND with some Calcareous Particles			9.9	25	11	40.2	SC	
				Total Depth of Boring = 5.0 Feet								
10												
15												
20												
25												
30												
35												
40												

Groundwater Note: The boring was advanced to a depth of 5.0 feet below the ground surface without using drilling fluid and groundwater was not encountered above that depth.

LOG OF BORING	Project No. 14341022 Blast Pad Improvements, RWY 16R MAF, Midland, Texas	Date: 10-20-2022	Type: Auger	BORING NO. B-3

DEPTH FEET	SYMBOL	SAMPLE	TEST	MATERIAL DESCRIPTION	UDWpcf	UCtsf	MC	LL	PI	%-200	SOIL CLASS
				Pavement Section (6" Concrete; 2" Base)							
			12	Dark Brown CLAYEY SAND			15.0	22	8	36.0	SC
			50	= 5" with some Calcareous Particles							
5				Total Depth of Boring = 5.0 Feet							
10											
15											
20											
25											
30											
35											
40											

Groundwater Note: The boring was advanced to a depth of 5.0 feet below the ground surface without using drilling fluid and groundwater was not encountered above that depth.

LOG OF BORING	Project No. 14341022 Blast Pad Improvements, RWY 34L MAF, Midland, Texas	Date: 10-20-2022	Type: Auger	BORING NO. B-4

APPENDIX B

CONSTRUCTION SAFETY AND PHASING PLAN (CSPP)

Parkhill

Midland International Air & Space Port

CONSTRUCTION SAFETY AND PHASING PLAN (CSPP)

Midland Air & Space Port (MAF)

AIP 3-48-0150-069-2022

Runway Blast Pads Improvements
Midland, Texas

PACKET 14.317 September 24, 2024

June | 2024
Parkhill Project #01623422

Parkhill

Midland International Air & Space Port

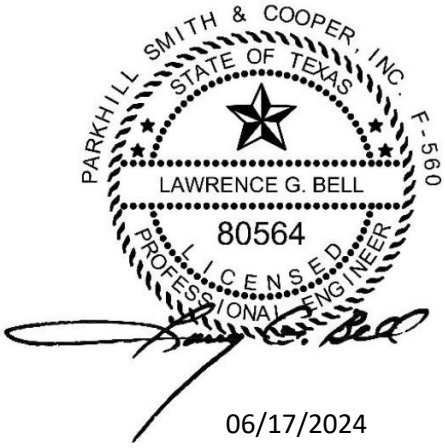

06/17/2024

CONSTRUCTION SAFETY AND PHASING PLAN (CSPP)

Midland Air & Space Port (MAF)

AIP 3-48-0150-069-2022

Runway Blast Pads Improvements
Midland, Texas

June | 2024
Parkhill Project #01623422

Parkhill

TABLE OF CONTENTS

1. COORDINATION 1
2. PHASING 2
3. AREAS/OPERATIONS AFFECTED BY CONSTRUCTION 3
4. NAVIGATION AID (NAVAID) PROTECTION 3
5. CONTRACTOR ACCESS 3
6. WILDLIFE MANAGEMENT 6
7. FOREIGN OBJECT DEBRIS (FOD) MANAGEMENT 6
8. HAZARDOUS MATERIALS (HAZMAT) MANAGEMENT 7
9. CONSTRUCTION ACTIVITY NOTIFICATIONS 7
10. INSPECTION REQUIREMENTS 8
11. UNDERGROUND UTILITIES 9
12. PENALTIES 9
13. SPECIAL CONDITIONS 9
14. RUNWAY AND TAXIWAY VISUAL AIDS 9
15. MARKING AND SIGNS 10
16. HAZARD MARKING AND LIGHTING 10
17. WORK ZONE LIGHTING FOR NIGHT CONSTRUCTION 10
18. PROTECTION 11
19. OTHER CONSTRUCTION LIMITATIONS 12

APPENDICES

APPENDIX A: CONSTRUCTION SAFETY AND PHASING PLAN AND DETAILS
APPENDIX B: FAA FORM 7460-1, NOTICE OF PROPOSED CONSTRUCTION OR ALTERATION (BLANK)
APPENDIX C: ADVISORY CIRCULAR 150/5370-2G, OPERATIONAL SAFETY ON AIRPORTS DURING CONSTRUCTION
APPENDIX D: FAA CSPP REVIEW CHECKLIST
APPENDIX E: SPCD SAMPLE

Project Name: MAF Runway Blast Pads Improvements

Sponsor's Agent:

Justine Ruff, Director of Airports
City of Midland, Texas
PO Box 60305
Midland Texas 79711
432.560.2200 x3010

Nicholas Krakovec, Deputy Director of Airports
City of Midland, Texas
PO Box 60305
Midland Texas 79711
432.560.2200 x3010

Consultant/Engineer:

Danny Winchester, PE, Project Manager
Parkhill
1700 West Wall Street Suite 100
Midland Texas 79701
432.697.1447

Larry Bell, PE, Project Engineer
1700 West Wall Street Suite 100
Midland Texas 79701
432.697.1447

Grant/Project Numbers: FAA AIP No.: 3-48-0150-069-2022

Engineer's Project No.: 01623422

1. COORDINATION

A. PROJECT MEETINGS

Predesign Conference. A Predesign Conference was held between Midland International Air & Space Port (MAF) staff and Parkhill personnel. Items discussed included Project scope, phasing, design, schedule, survey, unique Project elements/areas of potential concern, and utilities.

Prebid Conference. A Prebid Conference in accordance with FAA AC 150/5300-9B will be held for Consulting Engineer, MAF, and FAA to discuss Project details and allow contractors to ask Project-specific questions. Prebid Conference will be led by MAF with assistance from Parkhill.

Preconstruction Meeting. A Preconstruction Meeting, in accordance with FAA AC 150/5370-12B, will be held before issuance of Notice to Proceed. At minimum, required attendees will be MAF, Consulting Engineer, Resident Project Representative (RPR), Prime Contractor, and all subcontractors.

Construction Progress Meetings. Construction progress meetings will be held throughout Project duration, typically monthly. At minimum, required attendees will be Airport administrative staff, Consulting Engineer, RPR, Prime Contractor, and all subcontractors performing work during the current period. Construction phasing and safety will be a standing item at all construction progress meetings. Other ongoing agenda items will include:

- Project Schedule
- Safety/Security
- Project Coordination
- Construction Issues
- Submittals Review
- Request for Information (RFI) Review
- Change Orders Review
- Environmental Issues

- Quality Assurance (Test Reports)
- Record Drawings
- Pay Application Review
- General Discussion

Consulting Engineer will prepare and distribute meeting minutes for all meetings.

B. SCOPE

- Rebuild Runway 16R blast area with asphalt pavement, including extending paved shoulders.
- Extend paved shoulders on Runway 10 blast areas.
- Remove concrete pavement from Runway 34L original blast area. Regrade area with topsoil.

Any changes in Project Scope will require a revision to the CSPP, which must be approved by MAF and FAA.

C. FAA AIR TRAFFIC CONTROL TOWER (ATCT) COORDINATION

MAF Operations shall coordinate communication with MAF Air Traffic Control Tower (ATCT). FAA ATCT personnel will be invited to preconstruction and construction progress meetings to discuss construction schedule and Project phasing. Before any Project construction phase beginning or ending, a meeting to discuss pavement closure or ending shall be attended by MAF Operation staff, Consulting Engineer, FAA Regional ADO representative, FAA ATCT personnel, Contractor, etc.

2. PHASING

Refer to Phasing Plans included in Appendix A for limits of each phase.

The following time, location, and schedule constraints shall be included in the progress schedule preparation and Project execution:

This Project will be constructed within runway object free areas as well as approach and departure areas. Project work may not occur in these areas without complete prior coordination and agreement with MAF personnel regarding runway closure timing and duration. Per Construction Safety and Phasing Plan and the Phasing Plan sheets, major RWYs 10-28 and 16R-34L may be closed for an agreed-upon duration to allow construction in associated approach and departure areas. Only close one major runway at any one time. RWY 10-28 shall remain open during the winter and spring (December through April) to allow necessary ILS operations, and RWY 16R-34L shall remain open during the summer and fall (May through November) to utilize runway length in hot weather. General Aviation (GA) RWY 4-22 may also be closed to allow construction given complete coordination with MAF personnel regarding runway closure timing and duration.

A. BID PACKAGE (270 CALENDAR DAYS TOTAL)

- Phase 1 (150 Calendar Days RWY 16R-34L)
- Phase 2 (120 Calendar Days RWY 10)
- Phase order might be revised by MAF based on Project work start date.
- Construction Phasing Drawings may be reviewed in Appendix A.

B. PROJECT SCHEDULE

Contractor must submit a Project Schedule and Phasing Plan at/before preconstruction meeting. Any changes made to Project Schedule or Phasing will require a revision to CSPP which must be approved by MAF and FAA.

3. AREAS/OPERATIONS AFFECTED BY CONSTRUCTION

Project work on each of the three blast areas will require associated and nearby runway closures. The Work will affect runway approach and departure operations.

4. NAVIGATION AID (NAVAID) PROTECTION

A. NAVAIDS IN CLOSE PROXIMITY TO WORK AREA

NAVAIDs provide visual and electronic information used by pilots who operate and land aircraft at Airport. Construction activities can have negative impacts on NAVAID functionality and serviceability. Contractor must coordinate work effort and limit operations so existing NAVAIDs are not damaged or altered during Project. Contractor shall coordinate with Airport and Engineer if turning off runway lights or NAVAIDs are required. Do not attempt to shut off or operate any NAVAIDs.

NAVAIDs known to be affected by this Project include:

- Runway 16R - PAPI
- Runway 10 - PAPI, ALS, ILS
- Runway 34L - PAPI, REIL

5. CONTRACTOR ACCESS

A. GENERAL

Airport security is a vital part of Contractor responsibility during the Project. Contractor and employees, subcontractors, suppliers, and representatives shall always follow security guidelines, rules, and regulations of MAF and the Transportation Security Administration (TSA) during Project execution. Contractor is directly responsible for all fines or penalties levied against MAF as a result of any breach of security or safety caused by Contractor or employees, suppliers, subcontractors, or representatives.

B. AIRPORT OPERATIONS AREA (AOA)

Airport Operations Area (AOA) is any portion of the Airport property normally secured against unauthorized entry. AOA includes all areas specifically reserved for aircraft operations, support equipment, and personnel. Generally, AOA boundaries are Airport outer security fencing and any building that forms part of secured perimeter. When necessary to cross pavement surface on airfield, Contractor shall daily inspect all paved surfaces for Foreign Object Debris (FOD) and before reopening pavement surface to air traffic. Final inspection shall be by MAF Operations. Contractor shall never leave opening in secure fence.

C. MAF SECURITY BADGES

Contractor is responsible for obtaining a photo-identification security badge issued by MAF Operations for each supervisor or foreman of every work crew working within AOA. Contractor

shall obtain MAF Operations security badges for at least one member of each work crew working in separate areas of AOA. All individuals responsible to the Contractor, including employees, subcontractors, suppliers, or representatives, obtain and display a MAF Operations security badge, or are directly escorted/supervised by an individual displaying a current MAF Operations security badge.

Contractor may obtain MAF security badges from MAF Operations Department. MAF Operations reserves the right to limit the number of security badges issued to Contractor. MAF Operations will charge Contractor for each security badge issued. Fingerprint verification will be an additional cost. Total cost is covered by Contractor and not refundable. An additional fee will be charged for lost or destroyed badges.

MAF Operations security badges shall always be worn and easily visible while working within the AOA. Badge holder shall be familiar with and obey all regulations, security, and safety rules. MAF Operations security badge may be confiscated, and all security rights revoked by MAF Operations upon breach of any security or safety regulations at Operation discretion. MAF Operations badge holder shall surrender badge at Project completion, transfer or termination of employment, or any time at MAF Operations request.

MAF shall conduct a background check of each applicant for an MAF Operations security badge. Contractor is responsible for completing required forms and submitting to MAF Operations for review as early in the Project as possible to avoid construction delays. Forms for completing required background checks are available through MAF Operations after Project award. MAF Operations shall be responsible for reviewing background checks. Only persons whose application is approved by MAF Operations, are issued security badges. MAF Operations reserves the right to bar anyone from the AOA found by background check to be, in the opinion of MAF Operations, a risk to AOA security or safety.

At Project completion, Contractor shall return all MAF Operations-issued security badges to MAF Operations. MAF Operations will charge an additional fee for each lost or destroyed MAF Operations-issued security badge. All MAF Operations-issued security badges must be accounted for and surrendered at Project completion. Failure to account for and surrender all MAF Operations-issued security badges will constitute grounds for withholding retainage from final pay estimate amount.

D. CONTRACTOR'S ENTRANCE GATE

Adjacent to Contractor entrance gate outside AOA, Contractor shall provide a parking area for employee's personal automobiles. Engineer directs limits of this parking/storage area. At Project completion, any damage done by Contractor to this area shall be repaired to Engineer satisfaction at no additional cost to Owner. Repairs shall include but not limited to regrading, reseeding, and/or repaving any damaged areas.

Contractor is responsible for and shall control all movement through Contractor entrance gate. Only authorized personnel and vehicles are allowed to enter AOA through this gate. Pedestrian walkthroughs are not allowed through vehicular gate. When not in immediate use, Contractor shall securely lock gate to prevent entrance by unauthorized persons or vehicles. Upon request, Contractor shall provide Director of Aviation and MAF Operations with duplicate keys (for key locks) or combinations (for combination locks) to lock(s) used to secure Contractor entrance gate to AOA.

If construction activities, such as hauling materials, require Contractor entrance gate to AOA remain open for long periods, Contractor may, upon MAF Operations approval, leave gate open and provide a full-time watchguard at the gate. Watchguard shall be approved for and possess an MAF Operations-issued security badge. If this security arrangement is desired and approved, gate shall be manned by a watchguard while gate remains open. Watchguard shall be a

Contractor representative and responsible for all movement through gate. Again, only authorized persons and vehicles are allowed by Contractor's watchguard to enter AOA.

E. CONTRACTOR'S PLANT SITE, STORAGE, AND OFFICE AREA

Contractor is held completely responsible for any damage or deterioration in areas allowed for Contractor use as well as for maintenance and dust control for Project duration.

Direct negotiation may be conducted with Director of Aviation for any areas desired. Areas used by Contractor may be subject to rental rates and fees as Director of Aviation identifies.

Contractor shall completely restore, at own expense, areas occupied including but not limited to regrading disturbed areas, complete removal of debris, or any other material Contractor brings onto site, as well as complete replacement of topsoil, turf, asphalt pavement, concrete slabs, or drives, etc. that were worn, deteriorated, or damaged while Contractor and forces occupied area. All restoration shall be to Director of Aviation's satisfaction.

Prior to moving into an unpaved area, Contractor shall clear and grub as well as remove and stockpile a minimum 6 inches of existing topsoil. After Project completion and clearing site of materials, equipment, and debris, Contractor shall replace, spread, and grade salvaged topsoil, followed by seeding and fertilizing.

All restoration activities shall be accomplished per applicable Technical Specifications.

No direct payment will be made to Contractor for preparing or restoring plant site haul routes, storage, or office areas.

For all projects with an onsite concrete or hot-mix asphalt batch plant, and for projects involving pug-mill produced material, a concrete or asphalt paved material stockpile area is required. Stockpile all materials to incorporate into concrete, hot mix, cement-treated base (CTB), or other similar material on a specially prepared concrete or asphalt pad so stockpile contamination does not occur. Stockpile area shall be restored to pre-Project conditions

F. VEHICLE ESCORT

All vehicles responsible to Contractor entering AOA, (supplier vehicles, etc.), shall be escorted by an approved Contractor escort vehicle from point of AOA entry to construction site. Escort vehicle shall be clearly identified with standard FAA specified markings and/or flags as well as marked with Contractor name.

Escort vehicle is responsible for leading supply, delivery, or other vehicles across active airfield. To facilitate safe movement of escort vehicle and escorted vehicles, driver of escort vehicle shall be approved for, issued, and display an MAF Operations security badge. Further, escort vehicle driver shall be familiar with MAF security and safety procedures.

G. CHALLENGING UNAUTHORIZED PERSONNEL OR VEHICLES:

Contractor and employees, subcontractors, suppliers, and representatives who are issued an MAF Operations security badge, are responsible for challenging any person/vehicle found on AOA or other non-public area who does not display, cannot produce a valid MAF Operations security badge, or is not under escort or direct supervision of a person possessing a valid MAF Operations security badge. Advise the person he/she is within a restricted area and inform of an appropriate exit route. Should unauthorized person refuse to exit restricted area, immediately notifiy MAF Operations for further action and keep unauthorized person under surveillance until MAF Operations arrives.

Any expired or altered badge or badge bearing a photograph not matching bearer shall be brought to the attention of MAF Operations and immediately confiscated by MAF Operations or Airport Police.

H. CONTRACTOR'S SAFETY PLAN (CSP)

Contractor is required to submit a Construction Safety Plan (CSP) as part of the submittal process before construction. Always adhere to CSP. MAF reserves the right to have Contractor amend CSP at any time if concerns arise.

Contractor's escort vehicle will be responsible for leading supply, delivery, or other vehicles around active airfield on the perimeter roadway. To facilitate safe movement of escort and escorted vehicles, escort vehicle driver shall be approved for, issued, and display an MAF security badge. Further, escort vehicle driver shall be familiar with airport security and safety procedures. If Contractor path is agreed by MAF to cross active pavements, then MAF Operations will escort the Contactor's escort vehicle across the pavement. See Item I below.

I. TWO-WAY RADIO COMMUNICATIONS

MAF does not permit Contractor to contact ATCT; therefore, Contractor will not be required to have two-way radios. Communication will be through MAF Operations staff.

6. WILDLIFE MANAGEMENT

A. TRASH

Contractor must dispose all trash in a covered trash can or other method, not allowing trash to become a hazard or animal attractant.

B. STANDING WATER

Contractor shall minimize standing water.

C. TALL GRASS AND WEEDS

Contractor must maintain construction area grass to height required by MAF.

D. POORLY MAINTAINED FENCING AND GATES

Contractor shall maintain any fencing or gates in good condition, proper working order, and gap under fence or gate shall not exceed 3 inches.

E. DISRUPTION OF EXISTING WILDLIFE HABITAT

In event of wildlife habitat, Contractor will immediately notify MAF and Engineer.

7. FOREIGN OBJECT DEBRIS (FOD) MANAGEMENT

Contractor shall train and emphasize to construction site employees the need for continuous Foreign Object Debris (FOD) checks on or near active airfield pavement.

Contractor must conduct FOD checks before and after each construction shift at a minimum and monitor nearby active pavements throughout construction shift.

8. HAZARDOUS MATERIALS (HAZMAT) MANAGEMENT

Hazardous materials will be handled and stored per latest revision to FAA Advisory Circular 150/5370-2G - Operational Safety on Airports during Construction. Contractor must be prepared to immediately contain and clean spills resulting from fuel, oil, petroleum products, or hydraulic fluid leaks. Transportation and handling of other hazardous materials on Airport requires additional special procedures as addressed in latest revisions to FAA Advisory Circular 150/5320-15A - Management of Airport Industrial Waste. All spills must be immediately reported to MAF Operations at 432.560.2200.

9. CONSTRUCTION ACTIVITY NOTIFICATIONS

A. RESPONSIBLE REPRESENTATIVES / POINTS OF CONTACT

MAF

Name	Position	Phone
Aaron Easton	Deputy Director of Airports	432.560.2200 x3010
Nick Krakovec	Airport Operations Supervisor	432.560.2200 x3006

Parkhill, Engineer/Consultant

Name	Position	Phone
Danny Winchester, P.E.	Project Manager	432.697.1447
Larry Bell, P.E.	Project Engineer	432.697.1447
Ben Evans	Resident Project Representative	432.697.1447

_____TBD_____, Quality Assurance Testing

Name	Position	Phone

***** Insert Contractor and subcontractor personnel information upon Project award. *****

_____, Contractor

Name	Position/Trade	Phone

_____, Subcontractor

Name	Position/Trade	Phone

_____, Subcontractor

Name	Position/Trade	Phone

B. NOTICES TO AIRMEN (NOTAM)

MAF is responsible for issuing any Notice to Airmen (NOTAM) required before Project begins, as Project progresses, and will cancel NOTAMs at completion of intermediate construction phases of Project, as required. Contractor shall closely coordinate anticipated and required NOTAMs with MAF and provide MAF at least 72 hours' notice of necessary NOTAMs.

C. EMERGENCY NOTIFICATION PROCEDURES

In case of emergency, Contractor shall immediately call 911 first, then MAF Operations, then Engineer.

D. AIRCRAFT RESCUE AND FIREFIGHTING (ARFF) NOTIFICATIONS

During airport emergencies, all ARFF vehicles always have the immediate right of-way and may traverse any and all known roadways throughout airfield. Contractor, subcontractors, and suppliers shall immediately yield right-of-way to all Airport ARFF personnel and equipment.

Owner and Engineer shall be notified in writing at least 72 hours in advance if water lines or fire hydrants are out of service. 72-hour advance notification shall also be provided prior to performing any work that may close or affect an emergency rescue and firefighting route.

MAF Administration/Operations will communicate with MAF ARFF as needed to ensure MAF ARFF remain aware of construction activities.

E. FAA NOTIFICATION

Contractor will notify Consulting Engineer and MAF 72 hours in advance of any work near NAVAIDs or shutdowns affecting NAVAIDs owned by FAA. All communication with FAA and/or FAA Air Traffic Control Tower (ATCT) shall be through MAF Administration or Operations.

10. INSPECTION REQUIREMENTS

A. DAILY INSPECTIONS

Contractor shall perform daily safety, security, and phasing inspections to ensure CSPP compliance. Document inspections in Contractor's Daily Logs/Quality Control Logs.

Contractor is required to submit a Quality Control Plan (QCP) for Owner or designated representative review before any construction. QCP will address specific requirements for inspection of individual specification/pay items including test method, sampling point, testing frequency for each item, and proposed remediation action for each item if it does not meet Specification requirements. QCP will also provide direction on developing inspection reports and what to include. QCP will likely be developed in whole or in conjunction with selected Quality Control firm. QCP shall include and address Construction Management Plan (CMP) requirement.

B. FINAL INSPECTIONS

MAF Operations will perform final safety inspection before opening any airfield pavement to aircraft.

11. UNDERGROUND UTILITIES

Contractor shall locate, mark, and protect all utilities and infrastructure during construction. Location of utilities shall include notification of Texas One Call system, as well as coordination with MAF.

Report damage to any FAA-owned utility to MAF Operations. Contract bears complete cost of repairs.

12. PENALTIES

If Contractor is, at Engineer and MAF discretion, continuously negligent towards construction site safety, or refuses to comply with safety requirements, Contractor access to airfield may be suspended until Contractor complies. No reimbursement for delay will be granted under this circumstance. This would include negligence towards FOD control.

13. SPECIAL CONDITIONS

A. FAA FORM 7460-1

- Consulting Engineer will prepare and submit FAA Form 7460-1 for Project scope and proposed Construction Safety and Phasing Plan (CSPP).
- Contractor shall submit Form 7460-1 on all equipment over 20 feet high.
- A blank Form 7460-1 - Notice of Proposed Construction or Alteration, is included in Appendix B. Contractor shall submit supplemental FAA Form 7460-1 to FAA at least 45 days prior to utilization of equipment in excess of 20 feet in height.

B. ONSITE BURNING AND BLASTING

Onsite burning and blasting are prohibited.

C. GUN PROHIBITION ON AIRPORT PROPERTY

No firearms or guns are allowed on MAF property.

14. RUNWAY AND TAXIWAY VISUAL AIDS

Airport marking, lighting, signs, and visual NAVAIDs must be clearly visible to pilots, not misleading, confusing, or deceptive. All must be secured in place to prevent movement by prop wash, jet blast, wing vortices, or other wind currents and constructed of materials to minimize damage to an aircraft in the event of inadvertent contact.

Lighting, signs, and NAVAIDs located within object-free area must be frangible.

15. MARKING AND SIGNS

A. ACCESS ROUTE

Contractor required to mark access routes and haul routes with laths and flag tape.

B. APPROVED WORK AREAS

Contractor must mark approved work areas with laths and flag tape to ensure construction personnel and equipment remain in approved areas.

16. HAZARD MARKING AND LIGHTING

A. EQUIPMENT

- Contractor vehicles shall be clearly identified with Contractor name, standard FAA marking, lighting, and/or flags. Rotating amber beacons are required for all nighttime work.
- Contractor shall submit 7460s on all equipment over 20 feet in height.
- Any request to use nighttime lighting will be provided in writing two weeks prior to requested start time, from Contractor to Engineer and MAF for approval.

B. WORK AREAS

- Contractor shall provide temporary, low-profile barricades to delineate safe operating areas for aircraft.
- Barricades shall have flashing red lights.
- Contractor must inspect lights each evening and immediately replace any lights not operating correctly.
- Contractor will be fined for non-working lights as indicated in Project Specifications.
- Line perimeter construction area with low-profile aviation barricades spaced at maximum 10 feet between lights.

17. WORK ZONE LIGHTING FOR NIGHT CONSTRUCTION

If accomplishing work at night, Contractor-provided lighting equipment must adequately illuminate work area. Present a Lighting Plan to MAF, Engineer, and FAA at least 14 days before commencing nighttime construction activities. Requirement for Lighting Plan are stated in Section 3.22 of FAA AC 150/5370-2G.

18. PROTECTION

A. RUNWAY SAFETY AREA (RSA)

No construction or material stockpile shall occur within an active RSA. Contractor shall mark out RSA before construction. RSA is 500 feet wide and extends 1,000 feet beyond runway end for all runways.

B. RUNWAY OBJECT FREE AREA (ROFA)

No material stockpile will occur within an active ROFA. ROFA is 800 feet wide and 1,000 feet beyond runway end for all runways.

C. TAXIWAY SAFETY AREA (TSA)

No construction or material stockpile shall occur within an active TSA. TSA is 171 feet wide.

D. TAXIWAY OBJECT FREE AREA (TOFA)

No material stockpile shall occur within an active TOFA. TOFA is 259 feet wide.

E. OBSTACLE FREE ZONE (OFZ)

No construction activity or material stockpile will penetrate OFZ.

F. RUNWAY APPROACH/DEPARTURE SURFACES

No construction activities will penetrate approach/departure surfaces.

G. OPEN TRENCHES

Open trenches are not permitted within RSA of an open runway or TSA of an open taxiway. Contractor shall prominently mark any open trench or excavation at construction site with lighted barricades.

H. SAFETY INFORMATION

Refer to Appendix A for safety information.

I. JET BLAST

Contractor shall take precautions to minimize effects of jet blast, particularly in areas near runway threshold.

J. ELECTRICAL LOCK OUT/TAG OUT REQUIREMENTS

Contractor shall prepare lockout/tag out plan and communicate procedures to all staff.

K. CLOSED PAVEMENT AREAS

Where shown on Construction/Safety Plan, Contractor shall denote closed pavement using low-profile aviation barricades. Refer to Plans for details.

19. OTHER CONSTRUCTION LIMITATIONS

A. PROHIBITIONS

- No use of tall equipment over 20 feet unless a 7460-1 determination letter is issued for such equipment.
- No use of open-flame welding or torches.
- No use of electrical blasting caps.
- No use of flare pots.

B. RESTRICTIONS

- Any construction suspension required during specific airport operations will be coordinated by Engineer, Owner, and Contractor during construction.
- Areas that cannot be worked on simultaneously, will be coordinated by Engineer, Owner, and Contractor during construction.
- Refer to Article 16 – Hazard Marking and Lighting, for night construction requirements.
- Seasonal construction restrictions will be coordinated by Engineer, Owner, and Contractor during construction.

APPENDIX A: CONSTRUCTION SAFETY AND PHASING PLAN SHEETS

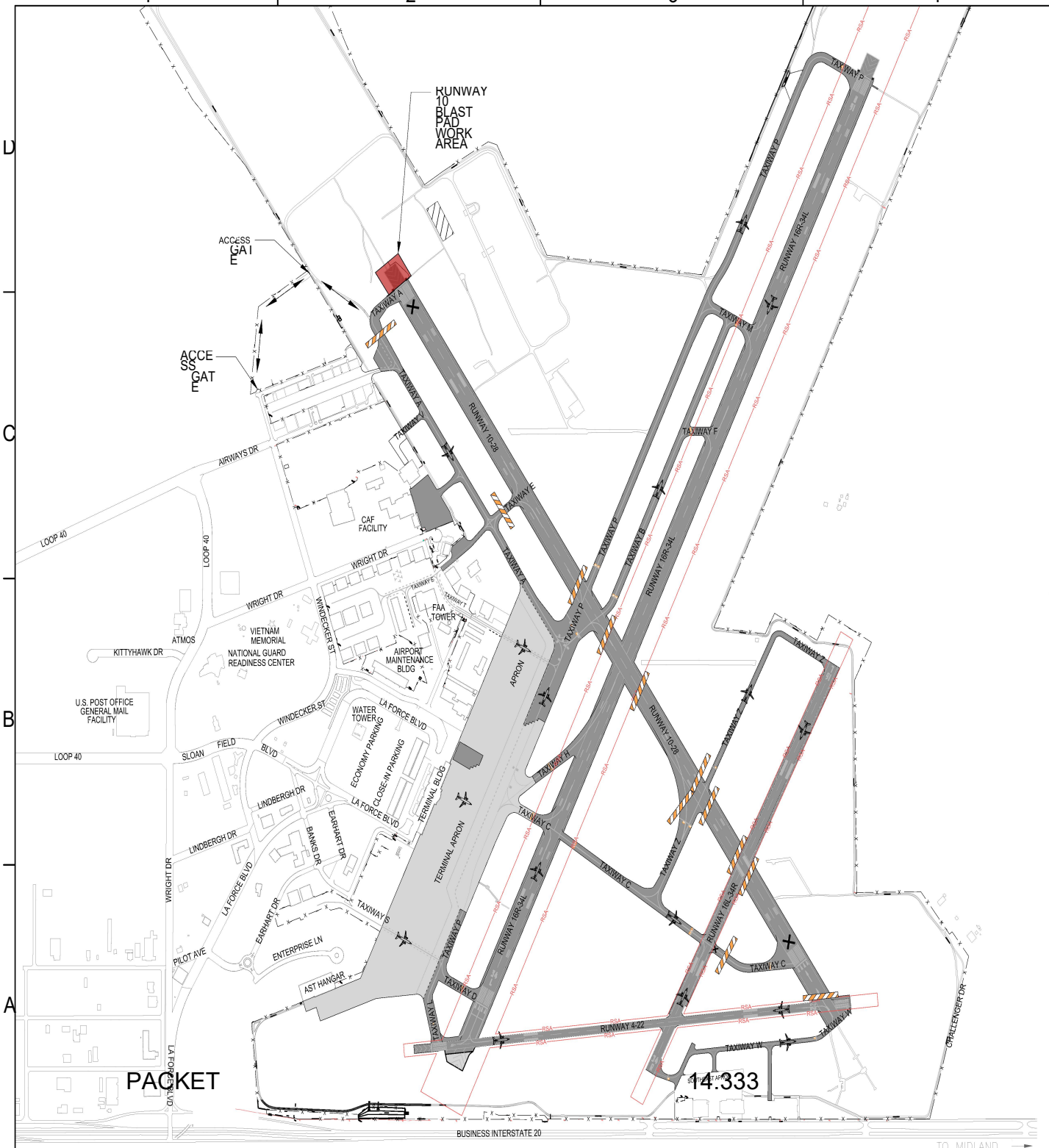

LEGEND

- APPROVED WORK AREA
- CONTRACTORS STAGING AREA
- EXISTING ASPHALT PAVEMENT
- EXISTING CONCRETE PAVEMENT
- EXISTING FENCE
- RSA — RUNWAY SAFETY AREA
- PROPOSED HAUL ROUTE
- LOW PROFILE BARRICADE. SEE DETAIL A1/G-009
- CLOSED RUNWAY CROSS. SEE DETAIL A3/G-009
- CLOSED TAXIWAY CROSS. SEE DETAIL A3/G-009 AND C4/G-009
- ACTIVE RUNWAY/ TAXIWAY/ APRON

PHASING GENERAL NOTES

A. THESE PLANS ARE INTENDED TO BE PRINTED IN COLOR. IF NOT, CONTACT ENGINEER AS SOON AS POSSIBLE.

B. THIS PLAN IS INTENDED TO GIVE THE CONTRACTOR AN UNDERSTANDING OF THE PHASING GOALS. ANY DEVIATION, HOWEVER, SHALL BE APPROVED BY AND ENGINEER PRIOR TO THE PRECONSTRUCTION MEETING.

C. SCHEDULE IS IN CALENDAR DAYS. ALLOWABLE CALENDAR DAYS INCLUDE HOLIDAYS AND WEEKENDS. WEATHER DAYS OVER AND/OR ABOVE THE HISTORICAL NORM CAN BE CREDITED IF JUSTIFIED AND AGREED UPON BY THE ENGINEER AND AGENT.

D. CONTRACTOR SHALL MEET ALL SCHEDULE AND PHASING GOALS IF AN ALTERNATE SCHEDULE IS PROPOSED. SEE GOALS LISTED ON PHASING PLAN.

E. TOTAL CONTRACT TIME OF 270 DAYS IS BASED ON THE NUMBER OF DAYS ALLOTTED TO COMPLETE PHASES 1 (120 DAYS) AND 2 (150 DAYS), INCLUDING CURE TIME AND COMPLETION OF PUNCH LIST.

F. INSTALL AVIATION BARRICADE ACROSS ALL AIRCRAFT MOVEMENT AREAS ADJACENT TO CONSTRUCTION AREAS WITH ONE OR A COMBINATION OF DETAIL A1/G-009.

G. THE CONTRACTOR SHALL MAINTAIN ALL AIRSIDE PAVEMENTS FREE OF CONSTRUCTION DEBRIS. IF EQUIPMENT IS ROUTED ACROSS PAVEMENT, SWEEP THE PAVEMENT AS NEEDED TO ENSURE AIRCRAFT SAFETY.

H. AIRCRAFT ALWAYS HAVE THE RIGHT-OF-WAY.

I. MARK AND LIGHT CONSTRUCTION AREAS AND VEHICLES AS REQUIRED IN LATEST EDITION OF AC 150/5370-2.

J. WORK AREA BOUNDARY IN ALL UNPAVED AREAS SHALL BE MARKED WITH LATHS OR ORANGE SAFETY FENCE. LATHS SHALL BE PLACED AT 10FT SPACING.

K. CONTRACTOR SHALL MAINTAIN A 10FT CLEAR AREA ADJACENT TO BUILDING, FENCE, OR AIRPORT STRUCTURE. AREA SHALL BE CLEAR OF STOCKPILES, MATERIAL OR EQUIPMENT.

L. AT ALL TIMES THE CONTRACTOR SHALL TAKE PRECAUTIONS NECESSARY TO PROTECT STRUCTURES AND TREES ADJACENT TO [illegible]

M. [illegible]

N. [illegible]

O. [illegible]

P. CONTRACTOR IS TO USE CAUTION DURING CONSTRUCTION TO PROTECT EXISTING TAXIWAY SIGNS, LIGHTS, NAVIGATIONAL AIDS, AND OTHER AIRPORT STRUCTURES.

Q. LOCATION OF EXISTING GAS AND ELECTRICAL LINES ARE APPROXIMATE AND NOT FROM SURVEY. CONTRACTOR WILL BE RESPONSIBLE FOR CONTACTING DIG TESS, THE CITY OF MIDLAND, THE AIRPORT, AND UTILITY OWNERS TO CONFIRM LOCATION OF ALL UTILITIES. PRECAUTIONS SHALL BE TAKEN TO PROTECT EXISTING UTILITIES AND INFRASTRUCTURE.

R. ISOLATE ALL PAVEMENT TO BE REMOVED BY SAW CUTTING, FORMING A CLEAN, STRAIGHT EDGE.

S. CONTRACTOR TO PROTECT EXISTING BOLLARDS, WELL CAPS, ELECTRICAL BOXES, AND OTHER INFRASTRUCTURE DURING DEMOLITION.

Parkhill

LAWRENCE G. BELCHER 8056 06/17/2024

Midland International Air & Space Port

Runway Blast Pads Improvements

Midland International Air & Space Port

CLIENT
City of Midland
Midland International Air & Space Port
[illegible] Force Blvd.
Texas

PROJECT NO
[illegible]6234.22

#	DATE	DESCRIPTION
3	06/17/2024	Issue for Bid
2	10/10/2023	Review
1	10/05/2023	Final Preliminary Design

Construction Safety & Phasing Plan Phase 008

PACKET 14.333 September 24, 2024

FILE NAME: A:\2022\6234\22\03_DSGN\01_DWG\01\0_GEN\G-008-6234.dwg LAYOUT NAME: G-008 PRINTED: Wednesday, June 05, 2024 - 4:57pm USER: LCastleman

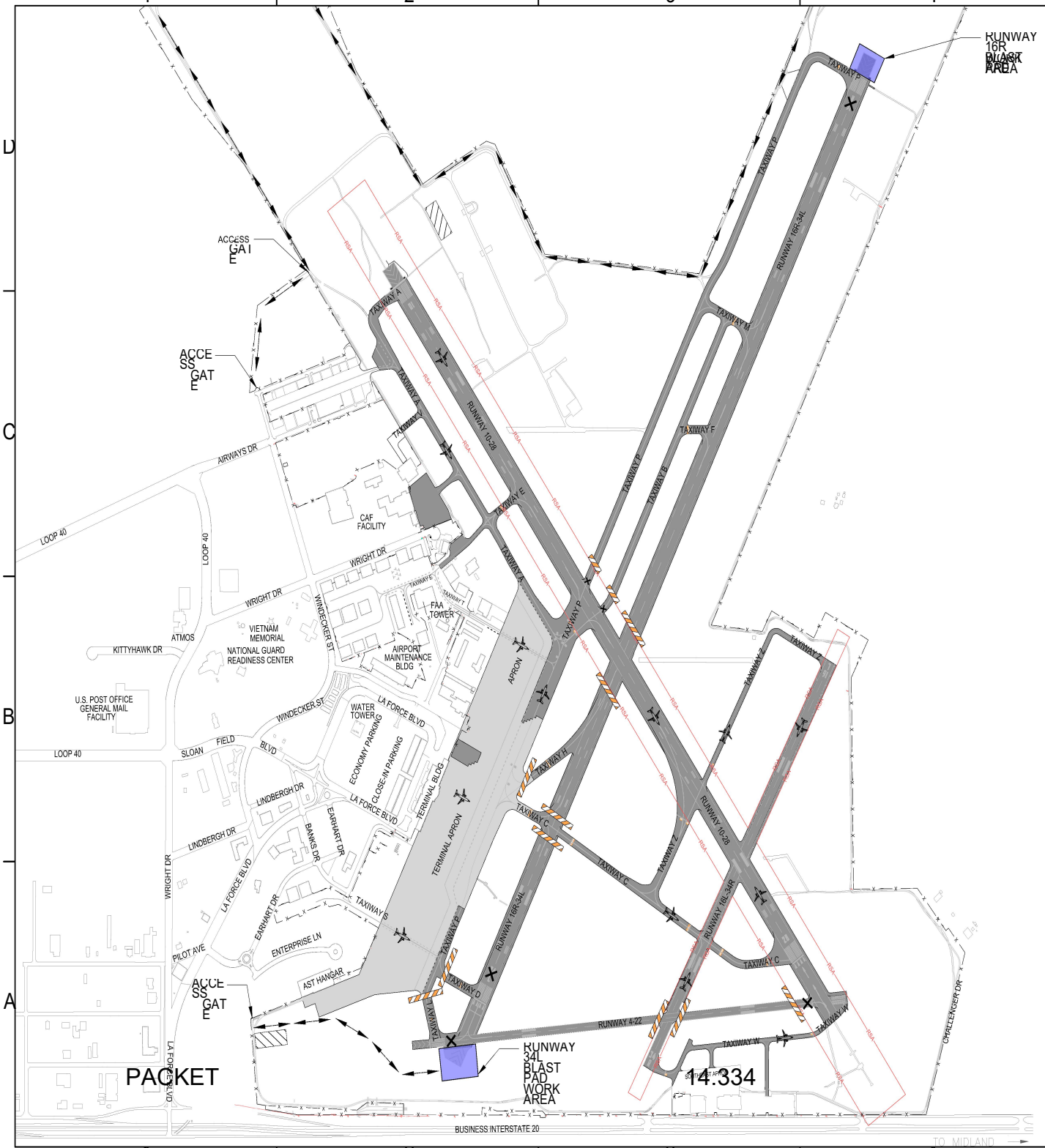

LEGEND

- APPROVED WORK AREA
- CONTRACTORS STAGING AREA
- EXISTING ASPHALT PAVEMENT
- EXISTING CONCRETE PAVEMENT
- EXISTING FENCE
- RSA — RUNWAY SAFETY AREA
- PROPOSED HAUL ROUTE
- LOW PROFILE BARRICADE. SEE DETAIL A1/G-009
- CLOSED RUNWAY CROSS. SEE DETAIL A3/G-009
- CLOSED TAXIWAY CROSS. SEE DETAIL A3/G-009 AND C4/G-009
- ACTIVE RUNWAY/ TAXIWAY/ APRON

PHASING GENERAL NOTES

A. [illegible] BE PRINTED IN COLOR. IF NOT, CONTACT ENGINEER AS SOON AS POSSIBLE.
B. THIS PLAN IS INTENDED TO GIVE THE CONTRACTOR AN UNDERSTANDING OF THE PHASING GOALS. ANY DEVIATION, HOWEVER, SHALL BE APPROVED BY AND ENGINEER PRIOR TO THE PRECONSTRUCTION MEETING.
C. SCHEDULE IS IN CALENDAR DAYS. ALLOWABLE CALENDAR DAYS INCLUDE HOLIDAYS AND WEEKENDS. WEATHER DAYS OVER AND/OR ABOVE THE HISTORICAL NORM CAN BE CREDITED IF JUSTIFIED AND AGREED UPON BY THE ENGINEER AND AGENT.
D. CONTRACTOR SHALL MEET ALL SCHEDULE AND PHASING GOALS IF AN ALTERNATE SCHEDULE IS PROPOSED. SEE GOALS LISTED ON PHASING PLAN.
E. TOTAL CONTRACT TIME OF 270 DAYS IS BASED ON THE NUMBER OF
I. DAYS ALLOTTED TO COMPLETE PHASES 1 (120 DAYS) AND 2 (150 DAYS), INCLUDING CURE TIME AND COMPLETION OF PUNCH LIST.
F. INSTALL AVIATION BARRICADE ACROSS ALL AIRCRAFT MOVEMENT AREAS ADJACENT TO CONSTRUCTION AREAS WITH ONE OR A COMBINATION OF DETAIL A1/G-009.
G. THE CONTRACTOR SHALL MAINTAIN ALL AIRSIDE PAVEMENTS FREE OF CONSTRUCTION DEBRIS. IF EQUIPMENT IS ROUTED ACROSS PAVEMENT, SWEEP THE PAVEMENT AS NEEDED TO ENSURE AIRCRAFT SAFETY.
H. AIRCRAFT ALWAYS HAVE THE RIGHT-OF-WAY. MARK AND LIGHT CONSTRUCTION AREAS AND VEHICLES AS REQUIRED IN LATEST EDITION OF AC 150/5370-2.
J. WORK AREA BOUNDARY IN ALL UNPAVED AREAS SHALL BE MARKED WITH LATHS OR ORANGE SAFETY FENCE. LATHS SHALL BE PLACED AT 10FT SPACING.
K. CONTRACTOR SHALL MAINTAIN A 10FT CLEAR AREA ADJACENT TO BUILDING, FENCE, OR AIRPORT STRUCTURE. AREA SHALL BE CLEAR OF STOCKPILES, MATERIAL OR EQUIPMENT.
L. AT ALL TIMES THE CONTRACTOR SHALL TAKE PRECAUTIONS NECESSARY TO PROTECT STRUCTURES AND TREES ADJACENT TO
T. [illegible] MEASURES TO PROTECT [illegible] SATISFACTION. ANY [illegible] ENGINEER SHALL BE CONTRACTOR'S SOLE EXPENSE.
M. ANY MARKINGS THAT ARE [illegible] COORDINATE WITH
X. [illegible] MARKINGS SURFACES.
O. [illegible] PAVEMENT.
P. CONTRACTOR IS TO USE CAUTION DURING CONSTRUCTION TO PROTECT EXISTING TAXIWAY SIGNS, LIGHTS, NAVIGATIONAL AIDS, AND OTHER AIRPORT STRUCTURES.
Q. LOCATION OF EXISTING GAS AND ELECTRICAL LINES ARE APPROXIMATE AND NOT FROM SURVEY. CONTRACTOR WILL BE RESPONSIBLE FOR CONTACTING DIG TESS, THE CITY OF MIDLAND, THE AIRPORT, AND UTILITY OWNERS TO CONFIRM LOCATION OF ALL UTILITIES. PRECAUTIONS SHALL BE TAKEN TO PROTECT EXISTING UTILITIES AND INFRASTRUCTURE.
R. ISOLATE ALL PAVEMENT TO BE REMOVED BY SAW CUTTING, FORMING CLEAN, STRAIGHT EDGE.
S. CONTRACTOR TO PROTECT EXISTING BOLLARDS, WELL CAPS, ELECTRICAL BOXES, AND OTHER INFRASTRUCTURE DURING DEMOLITION.

Parkhill

LAWRENCE G. BELCHER 8056 LICENSED PROFESSIONAL ENGINEER 06/17/2024

Midland International Air & Space Port
Runway Blast Pads Improvements

Midland International Air & Space Port

CLIENT
City of Midland
Midland International Air & Space Port
[illegible] Force Blvd.
Texas

PROJECT NO. 22-6234.
22

#	DATE	DESCRIPTION
3	06/17/2024	Issue for Bid
2	10/10/2023	Review
1	08/05/2023	Final Preliminary Design

Construction Safety & Phasing Plan Phase 009

PACKET 14.334 September 24, 2024

FILE NAME: A:\2022\6234\22\03_DSGN\01_DWG\010_GEN\G-009-6234.dwg LAYOUT NAME: G-009 PRINTED: Wednesday, June 05, 2024 - 4:58pm USER: LCastleman

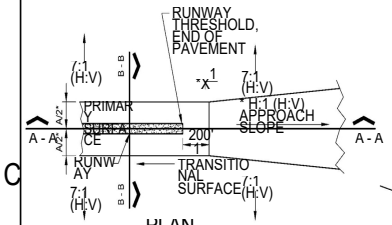

NOTE
STOR HORIZONTAL APPROACH SLOPE (H), DISTANCE (A), AND FLARE RATIO (X) SEE TABLE BELOW

C 1 PART 77 IMAGINARY SURFACES
NO SCALE

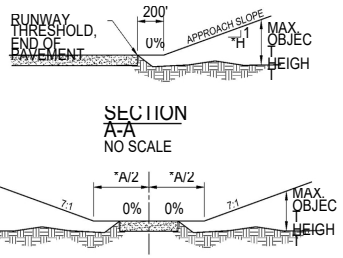

14 CFR PART 77

APPROACH SURFACE

RUNWAY	APPROACH SLOPE (H)	A	X
4	34	500	0.15
22	34	500	0.15
10	50	1,000	0.15
28	34	1,000	0.15
16L	20	500	0.15
34R	20	500	0.15
16R	34	1,000	0.15
34R	34	1,000	0.15

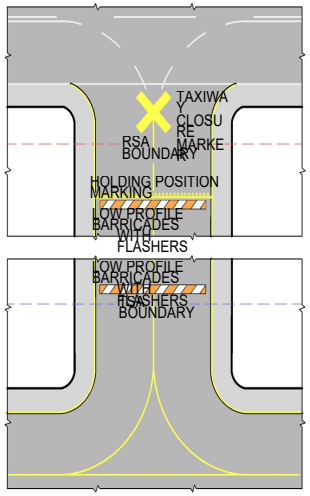

C 4 TEMPORARY TAXIWAY CLOSURE DETAIL
NO SCALE

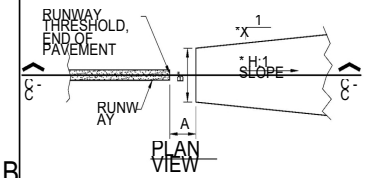

THRESHOLD SITING SURFACE

RUNWAY	SLOPE (H)	A	B	X
4	34	200	500	0.15
22	34	200	500	0.15
10	50	200	1,000	0.15
28	34	200	1,000	0.15
16L	20	200	500	0.15
34R	20	200	500	0.15
16R	34	200	500	0.15
34L	34	200	500	0.15

RUNWAY SAFETY AREA

RUNWAY	WIDTH	LENGTH BEYOND END OF RUNWAY
4 - 22	120'	300'
10 - 28	500'	1000' / 875'
16L - 34R	150'	300'
16R - 34L	500'	1000' / 930'

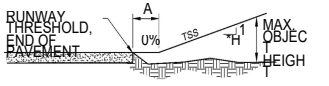

B 1 APPROACH/DEPARTURE STANDARD SURFACE
NO SCALE

(FIGURE 3-2, AC 150/5300-13)

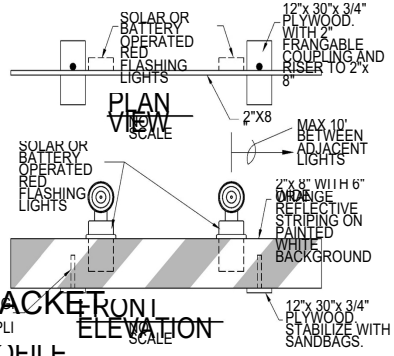

A 1 LOW PROFILE BARRICADE DETAIL
NO SCALE

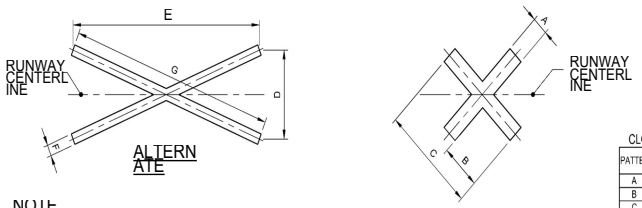

NOTE
1. CROSSES SHALL BE PLACED ON ALL RUNWAYS TO BE TEMPORARILY CLOSED. CROSSES SHALL BE PLACED AT EACH END OF RUNWAY CENTERLINE AS SHOWN ON THE PLANS, OR AS DIRECTED BY THE ENGINEER.
2. RUNWAY CLOSURE MATERIALS SHALL BE SECURED TO THE PAVEMENT AND WEIGHED TO BE SECURE IN THE WIND.
3. CROSSES SHALL BE AVIATION YELLOW COLOR.
4. LIGHTED BARRICADES SHALL BE PLACED ON EACH END OF TEMPORARILY CLOSED TAXIWAYS & RUNWAYS AS DIRECTED BY THE ENGINEER.
5. CONTRACTOR MAY USE MAF'S LIGHTED X'S DURING CLOSURE OF ANY RUNWAY. CONTRACTOR RESPONSIBLE FOR MAINTENANCE OF GENERATOR AND REPLACEMENT OF BULBS FOR THE DURATION OF PROJECT IF USED.

A 3 RUNWAY/TAXIWAY CROSSES
NO SCALE

CLOSED RUNWAY / TAXIWAY CROSSES DIMENSION TABLE

PATTERN	DIMENSION / SYMBOL TYPE	A	B	C	D	E	F	G
A	CLOSED RUNWAY	10'	25'	60'	-	-	-	-
B	CLOSED RUNWAY (ALTERNATE)	-	-	-	48'	120'	6'	129.26'
C	CLOSED TAXIWAY	5'	12.5'	30'	-	-	-	-
D	CLOSED TAXIWAY (ALTERNATE)	-	-	-	24'	60'	3'	64.6'

GENERAL SAFETY/NOTES

1. INSPECT MARKINGS AND BARRICADES DAILY AND MAKE REPAIRS AND ADJUSTMENTS IN A TIMELY MANNER. PROVIDE INSPECTION LOGS TO ENGINEER.
2. EMPLOYEE PARKING SHALL BE WITHIN THE STAGING AREA SHOWN ON THE
4. AIRPORT LAYOUT PLAN. ALL SHALL HAVE AN
5. CONTRACTOR'S VEHICLES SHALL BE
6. EQUIPMENT WHILE IN USE SHALL NOT PENETRATE S NAME AND FLASHING YELLOW LIGHT. APPROACH/DEPARTURE STANDARD SURFACE AS SHOWN IN C1. MATERIAL STOCKPILES SHALL NOT PENETRATE THE PRIMARY APPROACH OR TRANSITIONAL SURFACES. ALL EQUIPMENT OR OTHER OBJECTS THAT PENETRATE ANY OF THE IMAGINARY SURFACES MUST BE COORDINATED WITH THE ENGINEER IN ADVANCE. OBSTRUCTIONS TO THE IMAGINARY SURFACES MUST BE MARKED AND/OR LIGHTED IN ACCORDANCE WITH FAA GUIDELINES.
7. THE CONTRACTOR SHALL PREPARE AND SUBMIT A DETAILED SAFETY PLAN COMPLIANCE DOCUMENT PRIOR TO PRE-CONSTRUCTION CONFERENCE. THE PLAN SHALL DETAIL PLACEMENT OF SAFETY DEVICES, MARKING, LIGHTING, ETC. DURING EACH PHASE OF THE PROJECT AS REQUIRED IN LATEST EDITION OF AC150/5370.
8. THE CONTRACTOR SHALL PROVIDE A 24-HOUR POINT OF CONTACT WHO WILL BE RESPONSIBLE FOR IMMEDIATE CORRECTION OF SAFETY CONCERNS.
9. THE CONTRACTOR IS RESPONSIBLE FOR ADHERING TO THE REQUIREMENTS OF LATEST EDITION OF AC-150/5370-2 "OPERATIONAL SAFETY ON AIRPORTS DURING CONSTRUCTION."
10. CONTINUALLY CLEAR TAXIWAY, APRONS, AND RUNWAYS OF FOREIGN
11. OPERATIONS RESULTING FROM CONSTRUCTION ACTIVITIES SHALL REMAIN OFF
12. NO CONSTRUCTION SHALL OCCUR WITHIN THE RUNWAY SAFETY AREA UNLESS THE RUNWAY IS CLOSED.
13. PERSONNEL, MATERIAL AND OR EQUIPMENT MUST NOT PENETRATE THE OFZ OR INNER APPROACH OFZ AS DEFINED IN LATEST EDITION OF AC 150/5300-13 (PARAGRAPH 308).

September 24, 2024

14.355

Parkhill

LAWRENCE G. BELCHER 8056 06/17/2024

Midland International Air & Space Port
Runway Blast Pads Improvements

Midland International Air & Space Port

CLIENT
City of Midland
Midland International Air & Space Port
9506 Lt. Col. Austin Parkway
Midland, Texas

PROJECT NO
22-6234.22

#	DATE	DESCRIPTION
3	06/17/2024	Issue for Bid
2	10/10/2023	Review
1	08/05/2023	Final Preliminary Design

Construction Safety & Phasing Plan

C 010

FILE NAME: A:\2022\6234\22\03_DSGN\01_DWG\010_GENIG-010-6234.dwg LAYOUT NAME: G-010 PRINTED: Wednesday, June 05, 2024 - 4:58pm USER: LCastleman

APPENDIX B: FAA FORM 7460-1, NOTICE OF PROPOSED CONSTRUCTION OR ALTERATION (BLANK)

NOTICE OF PROPOSED CONSTRUCTION OR ALTERATION

§ 77.9 Construction or alteration requiring notice.

If you are proposing construction or alteration that is within the scope of (a), (b), or (c) of this section, or any person or organization who has determined that it will sponsor, support or participate in a construction or alteration that is within the scope of (a), (b), or (c) of this section, is required to file notice under § 77.9, you must submit to the FAA a completed FAA Form 7460–1, Notice of Proposed Construction or Alteration. You may obtain FAA Form 7460–1 at your local FAA office or regional office, or on the Internet at http://oeaaa.faa.gov. You should submit the completed FAA Form 7460–1 as soon as possible but, in any event, at least the following number of days before the earliest of the following dates: the date proposed construction or alteration is to begin; the date an application for a construction permit is to be filed; or the date a proposal is to be submitted to the agency responsible for the licensing requirements of the Federal Communications Commission (FCC). If you propose construction or alteration that is also subject to the licensing requirements of the FCC, you must submit notice to the FAA at least 30 days before the date proposed construction or alteration is to begin or the date an application for construction or alteration is to be filed, whichever is earlier.

(a) Any construction or alteration that is more than 200 ft. AGL at its site.

(b) Any construction or alteration that exceeds an imaginary surface extending outward and upward at a slope of 100 to 1 for a horizontal distance of 20,000 ft. from the nearest point of the nearest runway of each airport described in paragraph (d) of this section with its longest runway more than 3,200 ft. in actual length, excluding heliports.

(c) Any construction or alteration that exceeds an imaginary surface extending outward and upward at a slope of 50 to 1 for a horizontal distance of 10,000 ft. from the nearest point of the nearest runway of each airport described in paragraph (d) of this section with its longest runway no more than 3,200 ft. in actual length, excluding heliports.

(d) Any construction or alteration that exceeds an imaginary surface extending outward and upward at a slope of 25 to 1 for a horizontal distance of 5,000 ft. from the nearest point of the nearest landing and takeoff area of each heliport described in paragraph (d) of this section which is adjusted upward 17 feet for an Interstate Highway that is part of the National System of Military and Interstate Highways where overcrossings are designed for a minimum of 17 feet vertical distance, 15 feet for any other public roadway, 10 feet or the height of the highest mobile object that would normally traverse the road, whichever is greater, for any private road, 23 feet for a railroad, and for a waterway or any other traverse way not mentioned, an amount equal to the height of the highest mobile object that would normally traverse it, would exceed a standard of paragraph (a), (b), or (c) of this section.

(e) You need to file notice for construction or alteration:

(1) Any airport under construction that will be available for public use;

(2) A military airport under construction, or an airport under construction that will be available for use by the DOD.

(3) An airport operated by the Federal Government.

(f) You need to file notice of alteration to an existing airport or heliport where the new or altered landing area would be located within:

(1) Any existing or planned public-use airport shown in the latest FAA-approved airport layout plan, or any airport under construction, that is listed in the Publications section of the Daniel Chart Supplement of the U.S. Terminal Procedures publication;

(2) Any airport not described in paragraph (f)(1) of this section, either available for public use or military use, that is shown in a current FAA-approved airport layout plan, or any airport not described in paragraph (f)(1) of this section, either available for public use or military use, that is shown in a military service's approved construction criteria (military airports only); or

(3) Any airport not described in paragraph (f)(1) or (f)(2) of this section, that is registered with the FAA, including any heliport, gliderport, seaplane base, ultralight flightpark, or closed airport, if the airport is shown in the FAA's Publications section of the Daniel Chart Supplement of the U.S. Terminal Procedures publication.

(g) You need to file notice of construction or alteration of:

(1) Any highway, railroad, or other traverse way for mobile objects, of a height which, if adjusted upward 17 feet for an Interstate Highway that is part of the National System of Military and Interstate Highways where overcrossings are designed for a minimum of 17 feet vertical distance, 15 feet for any other public roadway, 10 feet or the height of the highest mobile object that would normally traverse the road, whichever is greater, for any private road, 23 feet for a railroad, and for a waterway or any other traverse way not mentioned, an amount equal to the height of the highest mobile object that would normally traverse it, would exceed a standard of paragraph (a), (b), or (c) of this section.

(2) Any antenna structure of 20 feet or less in height, except one that would increase the height of another antenna structure.

Mail Processing Center
Federal Aviation Administration
Southwest Regional Evaluation Group
10101 Hillwood Parkway
Fort Worth, TX 76177
website: https://oeaaa.faa.gov

INSTRUCTIONS FOR COMPLETING FAA FORM 7460-1

PLEASE TYPE or PRINT

ITEM #1. Please include the name, address and phone number of a personal contact point as well as the company name.

ITEM #2. Please include the name, address and phone number of a personal contact point as well as the company name.

ITEM #3. New Construction would be a structure that has not yet been built. Alteration is a change to an existing structure such as the addition of a side mounted antenna, a change to the marking and lighting, a change to power and/or frequency, or a change to the height. The nature of the alteration shall be included in ITEM #21 "Complete Description of Proposal". Existing would be a correction to the latitude and/or longitude, a correction to the height, or if filing on an existing structure which has never been studied by the FAA. The reason for the notice shall be included in ITEM #21 "Complete Description of Proposal".

ITEM #4. If Permanent, so indicate. If Temporary, such as a crane or drilling derrick, enters the estimated length of time the temporary structure will be up.

ITEM #5. Enter the date that construction is expected to start and the date that construction should be completed.

ITEM #6. Please indicate the type of structure. DO NOT LEAVE BLANK.

ITEM #7. In the event that obstruction marking and lighting is required, please indicate type desired. If no preference, check "other" and indicate "no preference" DO NOT LEAVE BLANK. NOTE: High Intensity lighting shall be used only for structures over 500' AGL. In the absence of high intensity lighting for structures over 500' AGL, marking is also required.

ITEM #8. If this is an existing tower that has been registered with the FCC, enter the FCC Antenna Structure Registration number here.

ITEM #9 and #10. Latitude and longitude must be geographic coordinates, accurate to within the nearest second known to the nearest hand-held GPS is only accurate to within 100 meters (328 feet) 95 percent of the time. This data, when plotted, should match the site depiction submitted under ITEM #20.

ITEM #11. NAD 83 is preferred; however, latitude and longitude may be submitted in NAD 27. Also, in some geographic areas where NAD 27 and NAD 83 are not available other datum may be used. It is important to know which datum is used. DO NOT LEAVE BLANK.

ITEM #12. Enter the full name of the nearest public-use (not private-use) airport or heliport or military airport or heliport to the site. If the structure is or will be in a city, enter the name of that city and state.

ITEM #13. Enter the name of the nearest city and state to the site. If the structure is or will be in a city, enter the name of that city and state.

ITEM #14. Enter the distance from the airport or heliport listed in #13 to the structure.

ITEM #15. Enter the direction from the airport or heliport listed in #13 to the structure.

ITEM #16. Enter the site elevation above mean sea level and expressed in whole feet rounded to the nearest foot (e.g. 17'3" rounds to 17', 17'6" rounds to 18'). This data should match the ground contour elevations for site depiction submitted under ITEM #20.

ITEM #17. Enter the total structure height above ground level in whole feet rounded to the next highest foot (e.g. 17'3" rounds to 18'). The total structure height shall include anything mounted on top of the structure, such as antennas, obstruction lights, lightning rods, etc.

ITEM #18. If an FAA aeronautical study was previously conducted, enter the previous study number.

ITEM #20. Enter the relationship of the structure to roads, airports, prominent terrain, existing structures, etc. Attach an 8-1/2" x 11" non-reduced copy of the appropriate 7.5 minute U.S. Geological Survey (USGS) Quadrangle Map MARKED WITH A PRECISE INDICATION OF THE SITE LOCATION. To obtain maps, contact USGS at 1-888-275-8747 or via Internet at "http://store.usgs.gov". If available, attach a copy of a documented site survey with the surveyor's certification stating the amount of vertical and horizontal accuracy in feet.

- For antennas, include the type of antenna and center of radiation
- For overhead wire or transmission lines, include size and configuration of wires and their supporting structures (attach depiction to true north.
- For each pole/support, include coordinates, site elevation, and structure height above ground level or water.
- For existing structures, the equally explain the reason for notifying the FAA (e.g. construction materials or previous study, etc.).

Filing alterations explain the FAA does not relieve the sponsor of this construction or alteration from complying with any other federal, state or local rules or regulations. If you are not sure what other rules or regulations apply to your proposal, contact local/state aviation's and zoning authorities.

Paperwork Reduction Work Act Statement: A federal agency may not conduct or sponsor, and a person is not required to respond to, nor shall a person be subject to a penalty for failure to comply with a collection of information subject to the requirements of the Paperwork Reduction Act unless that collection displays a currently valid OMB Control Number. The OMB control number for this information collection is 2120-0001. Public reporting for this collection of information is estimated to be approximately 19 minutes per response, including the time for reviewing instructions, searching existing data sources, gathering and maintaining the data needed, completing and reviewing the collection of information.
All responses to this collection of information are mandatory for anyone proposing construction or alteration that meets the criteria contained in 14 CFR 77. This information is collected to evaluate the effect of proposed construction or alteration on air navigation and is not confidential. Send comments regarding this burden estimate or any other aspect of this collection of information, including suggestions for reducing this burden to: Information Collection Clearance Officer, Federal Aviation Administration, 10101 Hillwood Parkway, Fort Worth, TX 76177-1524.

Form 7460-1 (04/20) Superseded Previous Edition | Electronic Version (Adobe) | NSN: 0052-00-012-0009

Privacy Act Statement (5 U.S.C. § 552a, as amended): AUTHORITY: The FAA is responsible for issuing a determination based on extensive analysis completed in accordance with 49 United States Code (USC) Sections 44718. Title 14 of the Code of Federal Regulations (14 CFR), part 77 authorizes FAA to collect this information. PURPOSE(S): FAA will use the information provided to administer the Aeronautical Study Process. ROUTINE USE(S): In accordance with DOT's system of records notice, DOT/ALL 16 Mailing Management System and DOT/FAA 826 Petitions for Exemption, Other than Medical Exemption-Public Dockets, the information provided may be disclosed to officials within the Federal government and the public in general.

Please Type or Print on this Form

Failure To Provide All Requested Information May Delay Processing of Your Notice

Form Approved OMB No. 2120-0001 Expiration Date: 04/30/2022

FOR FAA USE ONLY

Aeronautical Study Number

U.S. Department of Transportation
Federal Aviation Administration

Notice of Proposed Construction or Alteration

1. Sponsor *(person, company, etc. proposing this action):*
Attn. of
Name:
Address:
City: State: Zip:
Telephone: Fax:

2. Sponsor's Representative *(if other than #1):*
Attn. of
Name:
Address:
City: State: Zip:
Telephone: Fax:

3. Notice of: ☐ New Construction ☐ Alteration ☐ Existing ☐ Permanent ☐ Temporary (months, days)

4. Work Schedule: Beginning End

5. Duration:

6. Type: ☐ Antenna Tower ☐ Crane ☐ Building ☐ Power Line ☐ Landfill ☐ Water Tank ☐ Other

7. Marking/Painting and/or Lighting Preferred: ☐ Red Lights and Paint ☐ Dual - Red and Medium Intensity ☐ White-Medium Intensity ☐ Dual - Red and high Intensity ☐ White-High Intensity ☐ Other

8. FCC Antenna Structure Registration Number *(if applicable)*:

9. Latitude: ____ ° ____ ____ . ____ "

10. Longitude: ____ ° ____ ____ . ____ "

11. Datum: ☐ NAD 83 ☐ NAD 27 ☐ Other

12. Nearest: State

13. Nearest *Public-use* *(not private-use)* or Military Airport or Heliport:

14. Distance from #13. to Structure:

15. Direction from #13. to Structure: ____ ft.

16. Site Elevation (AMSL) ____ ft.

17. Total Structure Height (AGL) ____ ft.

18. Overall Height (#16 + #17) *(AMSL)*: ____ ft.

19. Previous FAA Aeronautical Study Number *(if applicable)*: -OE

20. Description of Location: *(Attach a USGS 7.5 precise Quadrangle Map with the certified survey)*

21. Complete Description of Proposal:

Frequency/Power (kW)	

Notice is required by 14 Code of Federal Regulations, part 77 pursuant to 49 U.S.C., Section 44718. Persons who knowingly and willingly violate the notice requirements of part 77 are subject to a civil penalty of $1,000 per day until the notice is received, pursuant to 49 U.S.C. Section 46301(a).

I hereby certify that all of the above statements made by me are true, complete, and correct to the best of my knowledge. In addition, I agree to mark and/or light the structure in accordance with established marking & lighting standards as necessary.

Date	Typed or Printed Name and Title of Person Filing Notice	Signature

FAA Form 7460-1 (04/20) Supersedes Previous Edition

NSN: 0052-00-012-0009

APPENDIX C: ADVISORY CIRCULAR 150/5370-2G, OPERATIONAL SAFETY ON AIRPORTS DURING CONSTRUCTION

All contractors and subcontractors responsible for implementation of this CSPP must review all relevant sections of the FAA AC 150/5370-2G, Operating Safety on Airports During Construction

Click here to link to the full Advisory Circular PDF:

https://www.faa.gov/documentLibrary/media/Advisory_Circular/150-5370-2G.pdf

APPENDIX D: FAA CSPP REVIEW CHECKLIST

Checklist for FAA CSPP Review

Airport Name: MIDLAND INTERNATIONAL AIR & SPACE PORT
LOCID: MAF
Associate City: MIDLAND, TEXAS
Project No.: 01.6234 22
Project Name: MAF RUNWAY BLAST PADS IMPROVEMENTS

F.1.1. AC 150/5370-2G

This checklist identifies the main elements and sub-elements established under Chapter 2 of Advisory Circular 150/5370-2G. Project Managers (PM) are encouraged to use this checklist as an aid when reviewing a Sponsor's CSPP for conformance to the safety standards. Because the PM's

CSPP Element	Elements Addressed? Yes	No	N/A	Remarks
Coordination (Section 2.5)				
– Contractor Progress Meetings	✔			
– Addresses necessary actions when changes are proposed to CSPP	✔			
– Provisions for FAA ATO Coordination	✔			
Phasing (Section 2.6)				
– Phase Elements	✔			
– Construction Safety Drawings	✔			
Area and Operations Affected by Construction Activity (Section 2.7)				
– Identification of affected Areas	✔			
– Mitigation Affects	✔			
Navigation Aid Protection (Section 2.8)				
– Operational NAVAID Critical areas	✔			
Contractor Access (Section 2.9)	✔			
– Location of Stockpiles Construction Material	✔			
– Vehicle and Pedestrian Operations	✔			
– Standing Water	✔			
Wildlife Management (Section 2.10)	✔			
– Gates	✔			
– Disruption of Wildlife Habitat	✔			
Foreign Object Debris (Section 2.11)	✔			
Hazardous Material Management (Section 2.12)				
– Hazardous Material Controls	✔			

CSPP Element	Element Addressed?			Remarks
	Yes	No	N/A	
Notification of Construction Activities (Section 2.13)				
– List of ResponsibleRepresentatives	✔			
– NOTAMs	✔			
– Emergency NotificationProcedures	✔			
– Coordination with ARFF	✔			
– Notification to the FAA (Part 77,NAVAIDs….)				
Inspection Requirements (Section 2.14)	✔			
– Final Inspections	✔			
– Daily Inspections				
Underground Utilities (Section 2.15)				
– Procedures for protecting underground utilities	✔			
Penalties (Section 2.16)				
– Penalty provisions for noncompliance with CSPP	✔			
Special Conditions (Section 2.17)				
– Conditions that may affect airport operations	✔			
Runway and Taxiway Visual Aids (Section 2.18)				
– General – Convey Clear Meaning; Secured from movement; Frangible Mounting	✔			
– Lighting and Visual NAVAIDs	✔			
– Signage	✔			
Access Routes - Marking and Signage (Section 2.19)				
– Haul Road Demarcation	✔			
Hazard Marking, Lighting and Signage (Section 2.20)				
– Areas Impacted by ConstructionOperations	✔			
– Runway Safety Area (RSA)	✔			
Work Zone Lighting for Nighttime Construction (Section 2.21)				
– Runway Object Free Area (ROFA)	✔			
– Proper Illumination of Construction Area/Equipment	✔			
– Taxiway Safety Area (TSA)	✔			
Protection Runway and Taxiway Areas, Zones and Surfaces (Section 2.22)	✔			
– Taxiway Object Free Area (TOFA)	✔			
– Obstacle Free Zone (OFZ)	✔			
– Approach and DepartureSurfaces	✔			
Other Limitations on Construction (Section 2.23)	✔			
– Prohibitions				

APPENDIX E: SPCD SAMPLE

Parkhill

CONTRACTOR'S SAFETY PLAN COMPLIANCE DOCUMENT (SPCD)

Project Information:

Airport and Sponsor: Midland International Air & Space Port (MAF) / City of Midland

Project Number: 01.6234.22

Project Description/Name: MAF Runway Blast Pads Improvements

Type of Work: Repave and reconfigure three runway blast pad areas.

TxDOT/FAA Project Manager: _____ Phone: _____

Airport Operations Contact: _____ Phone: _____

Contractor Information:

Prime Contractor: _____

Address: _____

Contact: _____ Phone: _____

Contractor Responsibility:

In accordance with Federal Aviation Administration (FAA) Advisory Circular (AC) 150/5370-2G, "Operational Safety during Airport Construction," a Project SPCD must be submitted to the FAA and Airport Operator for review and approval before issuance of a Notice to Proceed for Construction. Prepare SPCD in detail, written and graphical format, to identify timing and methodology for Contractor compliance with Project Construction Safety and Phasing Plan (CSPP).

Contractor shall comply with all provisions contained herein and provide the following Project-specific, complementary, and supplemental information to FAA approved CSPP:

Contractor shall always have CSPP and SPCD available for reference by Airport Operator and representatives as well as Contractor and subcontractor employees.

a. Location of CSPP: _____

b. Location of SPCD: _____

Contractor's Safety Plan Compliance Document (SPCD)

2. Provide contact information for person initiating and coordinating an immediate response to correct any construction-related activity that may adversely affect Airport operational safety (24-hour coverage required):
   Contact: _____ Phone: _____

3. List Contractor's on-site employees responsible for monitoring CSPP and SPCD compliance during construction:
   a. Contact Person: _____ Phone: _____
   b. Contact Person: _____ Phone: _____
   c. Contact Person: _____ Phone: _____
   d. Contact Person: _____ Phone: _____

4. Will Contractor deviate from Section 1, Coordination, as explained in CSPP included in Contract Documents:
   a. No: ___
   b. Yes: ___. Provide explanation: _____

5. Will Contractor deviate from Section 2, Phasing, as explained in CSPP included in Contract Documents:
   a. No: ___
   b. Yes: ___. Provide explanation: _____

6. Will Contractor deviate from Section 3, Areas/Operations Affected by Construction, as explained in CSPP included in Contract Documents:
   a. No: ___
   b. Yes: ___. Provide explanation: _____

7. Will Contractor deviate from Section 4, Navigation Aid (NAVAID) Protection, as explained in CSPP included in Contract Documents:\
   a. No: ___
   b. Yes: ___. Provide explanation: _____
   _____
   _____

8. Will Contractor deviate from Section 5, Contractor Access, as explained in CSPP included in Contract Documents:
   a. No: ___
   b. Yes: ___. Provide explanation: _____
   _____
   _____

9. Will Contractor deviate from Section 6, Wildlife Management, as explained in CSPP included in Contract Documents:
   a. No: ___
   b. Yes: ___. Provide explanation: _____
   _____
   _____

10. Will Contractor deviate from Section 7, Foreign Object Debris (FOD) Management, as explained in CSPP included in Contract Documents:
   a. No: ___
   b. Yes: ___. Provide explanation: _____
   _____
   _____

11. Will Contractor deviate from Section 8, Hazardous Materials (HAZMAT) Management, as explained in CSPP included in Contract Documents:
   a. No: ___
   b. Yes: ___. Provide explanation: _____
   _____

12. Will Contractor deviate from Section 9, Construction Activity Notification, as explained in CSPP included in Contract Documents:
    a. No: ___
    b. Yes: ___. Provide explanation: _____
    _____
    _____

13. Will Contractor deviate from Section 10, Inspection Requirements, as explained in CSPP included in Contract Documents:
    a. No: ___
    b. Yes: ___. Provide explanation: _____
    _____
    _____

14. Will Contractor deviate from Section 11, Underground Utilities, as explained in CSPP included in Contract Documents:
    a. No: ___
    b. Yes: ___. Provide explanation: _____
    _____
    _____

15. Will Contractor deviate from Section 12, Penalties, as explained in CSPP included in Contract Documents:
    a. No: ___
    b. Yes: ___. Provide explanation: _____
    _____
    _____

16. Will Contractor deviate from Section 13, Special Conditions, as explained in CSPP included in Contract Documents:
    a. No: ___
    b. Yes: ___. Provide explanation: _____
    _____

17. Will Contractor deviate from Section 14, Runway and Taxiway Visual Aids, as explained in CSPP included in Contract Documents:
    a. No: ___
    b. Yes: ___. Provide explanation: _____
    _____
    _____

18. Will Contractor deviate from Section 15, Marking and Signs, as explained in CSPP included in Contract Documents:
    a. No: ___
    b. Yes: ___. Provide explanation: _____
    _____
    _____

19. Will Contractor deviate from Section 16, Hazard Marking and Lighting, as explained in CSPP included in Contract Documents:
    a. No: ___
    b. Yes: ___. Provide explanation: _____
    _____
    _____

20. Will Contractor deviate from Section 17, Work Zone Lighting for Night Construction, as explained in CSPP included in Contract Documents:
    a. No: ___
    b. Yes: ___. Provide explanation: _____
    _____
    _____

21. Will Contractor deviate from Section 18, Protection, as explained in CSPP included in Contract Documents:
    a. No: ___
    b. Yes: ___. Provide explanation: _____
    _____

22. Conduct inspections at least once daily, more frequently if necessary to ensure construction personnel comply with CSPP and SPCD, so no altered construction activities create potential safety hazards (see attached Construction Project Daily Safety Inspection Checklist).

23. Describe in detail Contractor plan to restrict construction vehicle and personnel movement to permitted construction areas by flagging, barricading, erecting temporary fencing, or escorts, as appropriate and required in the CSPP (include appropriate plan sheets to identify time/location of control measures):

_____

_____

_____

24. Provide detailed description of Contractor plan ensuring no employees of Contractor, subcontractors, suppliers, or other persons enter any part of Air Operations Area (AOA) without authorization:

_____

_____

_____

_____

25. Describe equipment list in detail and provide a schedule of anticipated operation for all Contractor equipment over 20 feet tall (cranes, concrete pumps, etc.), heights of stockpiles, and haul routes when different from previously filed CSPP:

_____

_____

_____

_____

(As necessary, coordinate with Airport Operator to prepare FAA Form 7460-1 for FAA submission to determine if aeronautical study must be conducted before allowing tall equipment operations.)

Contractor's Safety Plan Compliance Document (SPCD)

26. Provide detailed description of Contractor plan to ensure construction personnel are familiar with safety procedures and regulations on Airport, CSPP, and SPCD:

SPCD Amendment:

SPCD shall be amended when Contractor proposes a construction practice not conforming to CSPP and SPCD that may impact Airport operational safety. Amendment will require a revision to CSPP, SPCD, and advanced coordination with Airport Operator and FAA.

Statement of Certification:

I certify we understand CSPP operational safety requirements and assert we will not deviate from approved CSPP or SPCD unless Airport Operator and FAA grant written approval. Additionally, I certify any deviation to any section indicated herein has been discussed and approved, prior to implementation, by Airport Operator, Engineer, and TxDOT/FAA:

Signature: _____ Date: _____

APPENDIX C
CONSTRUCTION MANAGEMENT PLAN (CMP)

Midland International Air & Space Port

CONSTRUCTION MANAGEMENT PLAN (CMP)

Midland Air & Space Port (MAF)

AIP 3-48-0150-069-2022

Runway Blast Pads Improvements
Midland, Texas

June | 2024
Parkhill Project #01623422

Midland International Air & Space Port

PARKHILL SMITH & COOPER, INC. F-560
STATE OF TEXAS
LAWRENCE G. BELL
80564
LICENSED PROFESSIONAL ENGINEER
06/17/2024

CONSTRUCTION MANAGEMENT PLAN (CMP)

Midland Air & Space Port (MAF)

AIP 3-48-0150-058-2021
Runway Blast Pads Improvements
Midland, Texas

June | 2024
Parkhill Project #01623422

TABLE OF CONTENTS

A. INTRODUCTION 1
B. PERSONNEL AND RESPONSIBILITIES 1
C. INSPECTION PROCEDURES AND FREQUENCIES 3
D. SUBMITTAL PROCESS 4
E. QUALITY CONTROL TESTING (BY CONTRACTOR) 4
F. ACCEPTANCE TESTING (BY OWNER'S REPRESENTATIVE) 5
G. TEST RESULTS 6
H. FINAL TEST AND QUALITY CONTROL REPORT 6

APPENDIX A: CONSULTING ENGINEERING STAFF RESUMES
APPENDIX B: LABORATORY CERTIFICATION
APPENDIX C: SUBMITTAL PROCESS SUMMARY
APPENDIX D: QUALITY CONTROL TESTING (BY CONTRACTOR)
APPENDIX E: ACCEPTANCE TESTING/QUALITY ASSURANCE (BY ENGINEER)

A. INTRODUCTION

The Project accomplished under this program consists of repaving and reconfiguring three blast pad areas at the Midland International Air & Space Port (MAF).

B. PERSONNEL AND RESPONSIBILITIES

- Sponsor:
  - Ms. Justine Ruff, Director of Airports, City of Midland, Texas, PO Box 60305, Midland, Texas 79711, 432.560.2200 x3010
  - Mr. Nicholas Krakovec, Deputy Director of Airports, City of Midland, Texas, PO Box 60305, Midland, Texas 79711, 432.560.2200 x3010
- Federal Aviation Administration:
  - Michael Van Vliet, FAA Southwest Region, Texas Airports Development Office ASW-650, 10101 Hillwood Parkway, Fort Worth, Texas 76177, 817.222.5132, michael.e.van.vliet@faa.gov
- Consulting Engineer and Staff
  - Danny Winchester, PE, Project Manager, Parkhill, 1700 West Wall Street Suite 100, Midland, Texas 79701, 432.682.1441, dwinchester@parkhill.com
  - Larry Bell, PE, Project Engineer, Parkhill, 1700 West Wall Street Suite 100, Midland, Texas 79701, 432.682.1441, lbell@parkhill.com
  - Larry Castleman, Engineer Associate, Parkhill, 4222 84th Street, Lubbock, Texas 79423, 806.473.2200, lcastleman@parkhill.com
  - Debbie German, Project Coordinator, Parkhill, 4222 84th Street, Lubbock, Texas 79423, 806.473.2615, dgerman@parkhill.com
- Project Manager/Engineer will oversee construction period services. Parkhill will also provide one, full-time Resident Project Representative (RPR) during Project construction. A second RPR will be provided if needed. RPR duties, responsibilities, and limitations of authority are described in the Professional Engineering Services Agreement. RPR will report directly to the Parkhill Project Manager. Parkhill will compile a copy of all test reports to be delivered to FAA. Key personnel and chain of communication are described as follows:

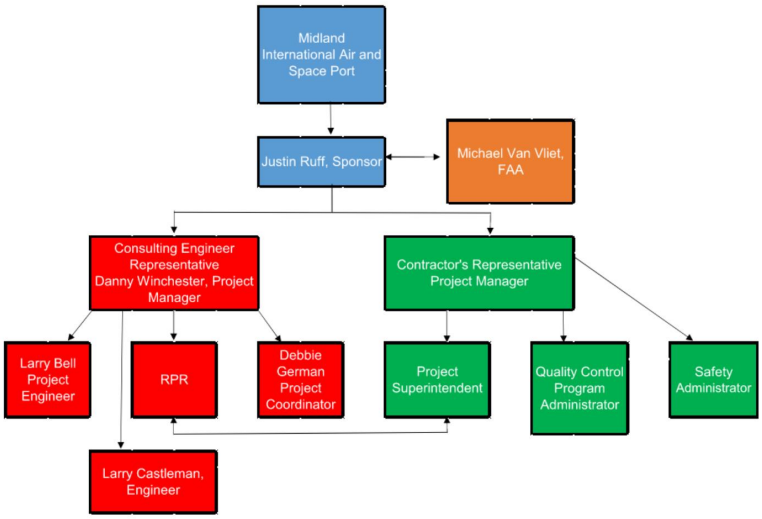

- Contractor (Updated upon award)
  - Contact Name, Title: _____
  - City State Zip: _____
  - Address: _____
  - Phone: _____
  - Email: _____
- Testing Labs
  - Sponsor's Quality Assurance Testing Lab (TBD)
    - Contact Name, Title: _____
    - Address: _____
    - City State Zip: _____
    - Phone: _____
    - Email: _____
  - Contractor's Quality Control Testing Lab (TBD)
    - Contact Name, Title: _____
    - City State Zip: _____
    - Address: _____
    - Phone: _____
    - Email: _____

As required, the Sponsor's Quality Assurance (QA) testing laboratory and Contractor's Quality Control (QC) testing laboratory must be certified according to ASTM D3666 and C1077.
Laboratory certificates may be found in Appendix B. Sponsor's QA laboratory is responsible for reporting all construction period and material compliant test results to Contractor, Sponsor, Sponsor's Agent (AA), and Engineer. Contractor's QC laboratory is responsible for reporting all construction period and material compliant test results to Contractor, Sponsor, Sponsor's Agent (AA), and Engineer.

C. INSPECTION PROCEDURES AND FREQUENCIES

1. Contractor is responsible for all testing and inspections as required by Technical Specifications and Construction Documents. Engineer will provide observation and testing services to ensure quality of material required by Project Technical Specifications.

2. BY CONTRACTOR: Contractor is required to verify all dimensions and elevations prior to performing work. Where applicable, this will include isolated spot checks only. Any discrepancies found during spot checks shall be reported to Engineer immediately. Contractor must not perform certain QC testing where applicable. Testing shall be performed by Contractor's lab and all test reports made available to Engineer daily.

3. BY ENGINEER: Quality Control Testing (by Contractor) – Contractor's Quality Control Program: Contractor will detail QC testing further in their QC Program required by AA as per Agreement for Professional Services. RPR will check for "general conformance to Plans and Specifications." RPR will not "inspect" every detail of Contractor's Project nor direct Contractor operations. RPR will observe, document findings, and bring any concerns to Parkhill project manager. RPR will also coordinate Owner's QA testing laboratory. Tests will be performed as required by Technical Specifications and as stated in Article E7, Observation Procedures. RPR will be onsite full-time daily to observe Contractor's activity progress, discuss any concerns with Contractor, communicate, testing, and other activity related to construction activities to Sponsor and AA as part of Project Final Report, if applicable. Daily Reports/Diary: RPR will maintain daily logs in Procore for activity progress, Acceptance Testing (by Owner's Representative). RPR will discuss any concerns with Contractor, communicate, testing, and other activity related to construction activities to Sponsor and AA as part of Project Final Report, if applicable. Daily Reports/Diary: RPR will maintain daily logs in Procore for activity progress, discuss any concerns with Contractor, communicate, testing, and other activity related to construction activities to Sponsor and AA as part of Project Final Report, if applicable. Include all photos in Procore and transmit as part of the Progress Reports to TAA Project Manager and carbon copy Sponsor.

D. SUBMITTAL PROCESS

Contractor must prepare and submit a complete submittal list at Preconstruction Meeting to populate into Procore and maintain throughout Project duration. Engineer will also maintain a record of submittal status in Procore. All submittals shall address "Buy American" and FAA approved sourced requirements by having Contractor submit a written certification. Attachment also does not permit Contractor to omit a statement indicating requirements are met. Preliminary list of submittals may be found in Appendix C. This list was prepared to assist Contractor in preparation of Project Specifications for review and approval.

E. QUALITY CONTROL TESTING (BY CONTRACTOR)

Contractor must visually inspect all items used upon arrival and maintain control charts for applicable material production. Contractor shall perform and document all daily inspections and tests as determined in the Technical Specifications, FAA Item C-100 – Contractor Quality Control Program. Contractor shall make QC reports, test results, and inspection reports available to Engineer. Provide test results before start of the following day. Provide inspection reports on workday after day of record. All items of material and equipment are subject to Engineer surveillance. If Contractor determines to be applicable, Contractor testing are included in Project Specifications. Specifications are included in Project requirements of QC Program, Engineer may expect Contractor to:

- Prepare and Provide Qualified Quality Control personnel on subcontractors for inspection reports on workday after day of record. All items of material and equipment are subject to Engineer surveillance. If Contractor determines to be applicable, Contractor testing are included in Project Specifications.

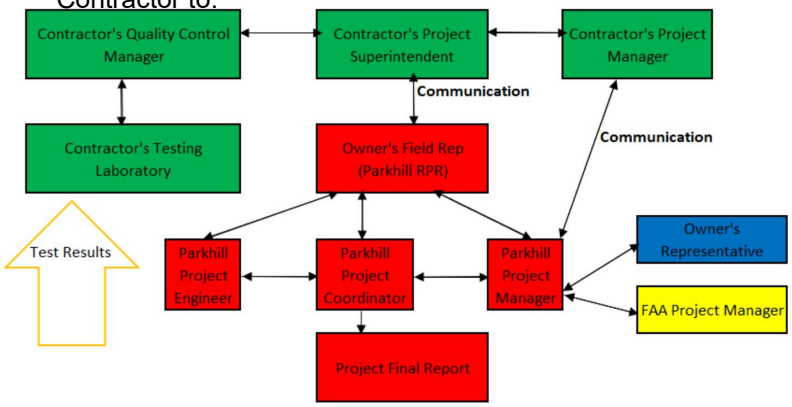

Summary of Action: If/when deficiencies arise during construction, instigate immediate communication as to results. Action includes but not limited to: Retest by Contractor to verify results.

- If retest confirms deficiency, Contractor shall rework deficiency or potentially replace Reworked area or replaced material tested by Contractor's laboratory.
- Contractor shall develop a plan for avoiding same deficiency on future segments of Work.
- Other specific course of action defined in Contractor's QC Plan.

F. ACCEPTANCE TESTING (BY OWNER'S REPRESENTATIVE)

For Testing Methods, see Appendix E, Table 3 - Quality Assurance (by Engineer).

Quality Assurance Testing Responsibility:

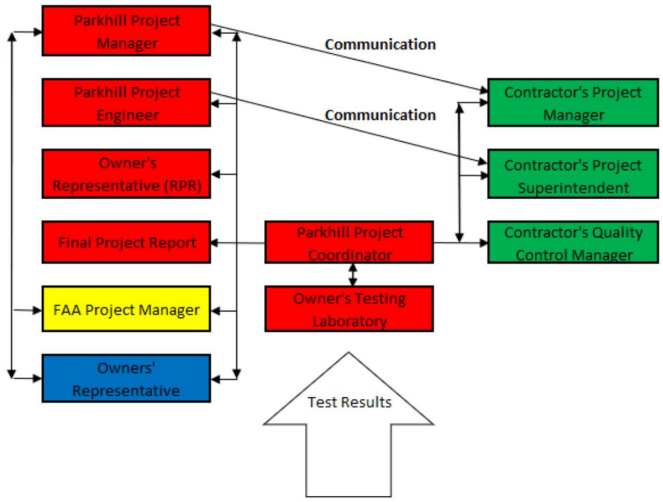

G. TEST RESULTS AND DOCUMENTATION

- Daily Quality Control (QC) Tests: Contractor must document all QC test results performed on Project. Submit test results to RPR for review the day after testing is performed. If results are deficient, RPR will initiate dialogue with Contractor's Superintendent. If results are favorable, RPR will forward results to Parkhill Project Assistant to be compiled for Project Final Report.
- Daily Quality Acceptance (QA) Tests: RPR will coordinate testing with Owner's Laboratory. RPR will also document all test results at point of testing, using this data to reconcile test reports received from Owner's Testing Laboratory. RPR will also note tests performed in Parking.
- Project Testing: Whether passing or failing, RPR will obtain a copy of all QC test results performed by Contractor. Deficient results will result in immediate communication between Contractor and Engineer and subsequent actions performed by Corresponding Testing Laboratory. Deficient results will result in immediate communication between Contractor and Engineer and an action plan for remediation developed. Retest results will be documented in all charges for failing tests.

H. FINAL TEST AND QUALITY CONTROL REPORT

As part of the Project Final Report, Engineer, Contractor, and Owner's Testing Laboratory will coordinate preparation of a Final Test and Quality Control Report. Report will summarize number of tests performed versus number of tests required for each specification item. Failed tests and subsequent retests will be included. Where necessary, document acceptance of specification deficiencies.

APPENDIX A: CONSULTING ENGINEER STAFF RESUMES



Danny Winchester, PE

Civil Engineer | Principal

Danny Winchester, PE, is a Principal and a Team Leader for Parkhill's Aviation Sector. His 35 years at Parkhill have been spent in aviation design and project management. Danny's aviation design has been mostly with FAA Certificated Airports (Part 139). He has been involved in aviation projects at Midland International Air & Space Port since he came to work for Parkhill. He has developed a strong expertise in FAA funding processes for Airport Improvement Project funding and Passenger Facility Charge funding. This expertise has allowed Danny to assist the City of Midland in acquiring over $150 million of funding from FAA for Capital Improvement Projects at the Midland International Airport over the past 35 years. Danny assisted Midland International Air & Space Port in becoming the first Commercial Service Airport (Part 139) to receive an FAA Certified Space Launch Site Operator License. Danny Access served the engineering profession by serving in many roles at the local, regional, and state levels of the Texas Society of Professional Engineers. He has been recognized by the Texas Society of Professional Engineers as both the Young Engineer of the Year for the Permian Basin Chapter and Engineer of the Year for the Permian Basin Chapter. He received the Distinguished Engineer Award from the Texas Engineering Foundation - 2004.

EDUCATION
Texas Tech University
Bachelor of Science
Engineering, 1984

REGISTRATION
Licensed Professional Engineer
Texas, 65060

YEARS OF EXPERIENCE
37

NOTABLE PROJECTS

- Airport Security Access Control Improvements
- Control System
- 20 Fabric Upgrade
- Runways and Taxiways
- MAF Aircraft Ramp Rehabilitation
- MAF Airfield Lighting Cabling
- MAF Airfield Lighting Improvement
- MAF Airfield Signage
- MAF Concrete Terminal Apron Construct Taxiway
- MAF Emergency Roadway and Gates Rehabilitation
- MAF Executive Apron Reconstruction
- MAF Executive Apron Reconstruction
- MAF Lighting and Signage Area B Rehabilitation
- MAF New Terminal Vehicle Parking Lots
- MAF Northwest Taxilane Extension - Phase 1
- MAF Rehab Entrance Road Pavement and Guidance Signage (Runway 10 End)
- MAF RIM Rehabilitation
- MAF Security Checkpoint Expansion
- MAF Taxiway P Aircraft Rehab
- MAF Terminal Building Outbound Baggage Rehabilitation
- MAF Terminal Building System Replacement
- MAF Terminal Vehicle Parking Rehabilitation and Parking
- MAF Terminal Building Equipment Replacement
- MAF Terminal Building Expansion - Gate 6



Larry Bell, PE

Civil Engineer | Senior Associate

Larry Bell, PE is a Senior Associate and senior engineer in Parkhill's Aviation Sector. He has prior experience in site and residential development with expertise in the topographic grading aspects of those projects. Larry has developed an appreciation for multi-discipline projects that combine the input of experts in varied professional fields. He is now leveraging those attributes into the Aviation field in airside and landside project development. He has served as President of the local chapter of the American Society of Civil Engineers.

EDUCATION
Texas Tech University
Bachelor of Science, Engineering, 1989

REGISTRATION
Licensed Professional Engineer
Texas, 80564

YEARS OF EXPERIENCE
31

NOTABLE PROJECTS

- MAF Carrier Runways and Taxiways
- MAF Airfield Pavement Marking
- MAF Airfield Wildlife Fence
- MAF Construct Taxiway and Apron at CAF
- MAF Lavatory Disposal Station
- MAF New Terminal Vehicle Parking Lots
- MAF RIM (Runway 10 End) Preliminary Engineering Report
- MAF Terminal Phase 1 Vehicle Parking Rehabilitation and Parking Equipment Replacement
- MDD New Hangar Development
- Midland Air and Space Port Business Park Improvements
- Midland International Air & Space Port Master Plan
- Midland International Airport Northwest Taxilane Extension - Phase 2
- Midland International Airport Taxiway P Aircraft Run-up
- Schlemeyer Airport Runway, Taxiway and Lighting Improvements
- Spaceport Business Park Environmental and Asbestos Survey



Larry Castleman

Engineering Technologist

EDUCATION
Texas Tech University
Bachelor of Science
Engineering, 2014

YEARS OF EXPERIENCE
2

NOTABLE PROJECTS

- MAF Airfield Lighting Rehabilitation
- TxDOT Cleburne Taxiway D Relocation, Runway 15/33 and Taxiway A Rehabilitation
- Lubbock Preston Smith International Airport Terminal Apron Rehabilitation
- TxDOT Moore County Airfield Rehab
- LBB Taxiways M and J Rehabilitation
- Reese Tech Center 2020 EDA Grant Miscellaneous Wafers
- LBB Airfield Wide Joint Seal
- TxDOT Graham Municipal Airport Garza County Airport
- TIPaso International Airport FBO Ramp Project Pursuit Realignment
- LEDA Lubbock Business Park South Half Infrastructure Improvements
- TxDOT Floydada Municipal Airport
- TxDOT Seymour Municipal Airport 2018
- LEDA LBBK Bus Park N. Nutmeg and Hunter



EDUCATION
University of Phoenix
Bachelor of Science / Management, 2012

YEARS OF EXPERIENCE
6

Debbie German

Project Assistant

Debbie German is the Aviation Project Assistant (PASS) and has been with Parkhill since March 2015. She began with Parkhill in the Civil Clerical department, where she completed and reviewed FAA, TxDOT, and EJCDC specifications, reports, and more. She continues to work with those entities as well as assist in creating Parkhill's Civil Master Specifications to improve the firm's design communication and clarity. As a PASS, she provides project management support to the Aviation Sector with project documentation, internal and external communication, and project tracking. Debbie has a thorough understanding of TxDOT's eGrants, assisting clients in securing TxDOT funding for their projects, and Procore, Parkhill's go-to software for communicating Civil project information among the client, design team, and other stakeholders. In each capacity, Debbie serves the firm and its clients, recognizing the needs of the client, project managers, and administrators and working to use among each working project of the project s[illegible] a [illegible] of the firm, having served on various [illegible] committees to [illegible] Parkhill upholds its core values and motto of Bu[illegible].

NOTABLE PROJECTS

- Joint Sea Rehabilitation
- LBB Terminal Apron Rehabilitation
- MAF Airfield Lighting Rehabilitation
- Wildlife Airfield Pavement Rehabilitation
- Concrete Apron
- Main Rehabilitate NW Cowlane
- Tulsa Airport Pavement Management
- Tulsa Airport Perimeter Road
- TxDOT Cameron AP Pavement Rehab, Lighting, and PAPI
- TxDOT Cleburne Taxiway D Relocation, Runway 15/33
- TxDOT Culberson County Airport
- TxDOT Hoydada Municipal Airport
- TxDOT Odessa Ector County
- TxDOT Pecos Municipal Airport Taxiway
- TxDOT Pecos Municipal Airport Rehabilitation
- TxDOT Seymour Municipal Airport Runway 17-35
- TxDOT Winkler County Airport
- Winkler County Airport Hangars

APPENDIX B: LABORATORY CERTIFICATION

Available Upon Request

APPENDIX C: SUBMITTAL PROCESS SUMMARY

Table 1: SUMMARY OF SUBMITTALS

Specification	Spec Section	Submitted By	Material	Test Standard	Test Required	Sampling Locations	Minimum Test Frequency	Requirements	Notes
C-100, Contractor Quality Control Program	100-1	C					1/Project		Contractor shall establish a CQCP
C-102, Temporary Air and Water Pollution, Soil Erosion, and Siltation Control	102-1	C					1 / Project		Contractor to prepare SWPPP and NOI, submit copies to Engineer/Owner.
C-105, Mobilization		C		None	None				
P-101, Removal of Existing Pavement		C		None	None				
P-152, Excavation, Subgrade, and Embankment	None	C							
Item 401, Hot Mix Asphalt (HMA) Pavements	401-2.1	C	Aggregate	Ferrous Sulfides/Iron Oxides	Lime Slurry	Source	1/project	No Brown Gelatinous Precipitate	
	401-2.1.a	C	Course Aggregate	ASTM C131	Percent of Wear	Source	1/project	<40%	
					Sodium Sulfate	Source	1/project	<12% or <18% after 5 cycles	
				ASTM C88	Soundness Loss	Source	1/project		
					Fractured Faces	Source	1/project	>75% by weight having 2 or more fractured faces and >85% by weight having at least 1 fractured face.	Achieved by crushing.
				ASTM D4791	Flat, elongated, and flat and elongated particles	Source	1/project	5:1 by weight	
	401-2.1.b	C	Fine Aggregate	ASTM D4318	Plasticity Index (PI) and Liquid Limit (LL)	Source	1/project	PI < 6 LL < 25	
				ASTM C88	Soundness Loss (after 5 cycles)	Source	1/project	<10% (for sodium sulfate) or <15% (for magnesium sulfate)	
				ASTM C142	Clay lumps and friable particles	Source	1/project	<2% by weight	
			Natural Sand (if used)	ASTM D1073	Standard Specification for Fine Aggregate for Bituminous Paving Mixtures (Grading, fineness modulus, etc.)	Source	1/project	Must meet requirements of ASTM D1073	Applies if natural sand is used.
			Natural Sand (if used)	ASTM D4318	Plasticity Index (PI) and Liquid Limit (LL)	Source	1/project	PI < 6 LL < 25	Applies if natural sand is used.
	401-2.2	C	Mineral Filler (if used)	ASTM D242	Standard spec for Mineral Filler	Source	1/project	Must meet requirements of ASTM D242	If filler in addition to that naturally present in aggregate, is necessary, this applies.
	401-2.3	C	Asphalt Cement Binder	ASTMD6373	Standard Spec for Asphalt Cement Binder	Source	1/project	Munst meet requirements of ASTM D6373 for PG 64-28	Include manufacturer Certificate of Compliance in mix design. Supplier's certified test report provided to engineer for each load delivery to mix plant. If binder modified after delivery to mix plant, provide certified test report
	401-2.5	C	Anti-Stripping Agent or Additive	Anti-Stripping Agent harmful ingredients,	Shall be heat stable, not change the asphalt cement viscosity beyond specified limits, contain no				Applies if anti-stripping agent or additive be added in recommended proportion by approved method, and APPROVED BY THE DEPARTMENT certification.
	401-3.2	C	HMA Job Mix Formula (JMF)	Asphalt Institute's MS-2 Mix Design Methods	Designed Using: JMF	Plant	1 per JMF used	Submitted > 30 days prior to start of paving operations	
				AASHTO T283 or ASTM D4867	Tensile Strength Ratio	Plant	1 per JMF used	Conditioned and tested at 20-80% saturation	If TSR <75, use anti stripping agent to achieve >75.
				JMF to include, as a minimum: a. Total combined aggregate gradation, individual gradation of all aggregate stockpiles, and percent by weight of each stockpile used in the JMF b. Percent of Asphalt Cement c. Asphalt performance grade and type of modifier (if used) d. Number of gyrations e. Laboratory mixing temperature f. Laboratory compaction temperature g. Temperature-viscosity o fthe PG binder showing acceptable range of mixing and compation temperatures (for modified binders include supplier recommended mixing and compaction temperatures) h. Plot of the combined gradation on a 0.45 power gradation curve i. Graphical plots of air voids, VMA, and unit weight versus asphalt content. j. Specific gravity and absorption of each aggregate and RAP k. Percent natural sand l. Percent fractured faces m. Percent by weight of flat particles, elongated particles, and flat and elongated particles n. Tensile Strength Ratio (TSR) o. Anti-Strip agent (if required) p. Date JMF was developed (must not be from prior construction season and less than 90 days prior to production). q. Percentage and properties of RAP, if used (asphalt content, binder grade, etc.) Contractor shall submit a proposed JMF based on the testing of 3 samples prepared at optimum asphalt content. The average of these results will indicate conformance with the JMF requirements of Tables 1 and 3.				
			HMA	Table 1: Gyratory Design Criteria (75 gyrations)					
				Gyratory Design Gyrations	Target Air Voids = 3.5%	Plant HMA Samples	3 per JMF	3.50%	
					Voids in Mineral Aggregate (VMA)	Plant HMA Samples	3 per JMF	15% (minimum)	
					VMA minimum				
					Gradation			Gradation meeting Table 3	

Table 1: SUMMARY OF SUBMITTALS

Specification	Spec Section	Submitted By	Material	Test Standard	Test Required	Sampling Location	Minimum Test Frequency	Requirements	Notes
Item 403, Asphalt Mix Pavement Base Course			HMA	ASTM D5821 or D2172	Asphalt Content	Plant	3 per JMF	5.0-7.5% (Stone or Gravel); 6.5-9.5% (Slag)	Use ASTM D6307 is D2172 correction factor is >1.0.
			HMA	ASTM C136 and C117	Gradation	Plant HMA Samples	3 per JMF	Table 3	
	401-3.3	C	Recycled Asphalt Pavement (RAP)	RAP may only be used in Shoulder and base course design. RAP shall not be used in surface course. Max RAP allowed is 25%. Other restrictions and requirements apply, see spec section.					
	401-4.11	C	Contractor shall submit a laydown plan prior to placement of HMA			Laydown Plan			Should be designed to minimize cold joints in pavement.
	401-6.1	C	Contractor Quality Control Program has been approved. (401-3.5)	See section 401-6.1 for minimum plan elements.					
	403-2.1	C	Aggregate	Ferrous Sulfides/Iron Oxides	Lime Slurry	Source	1/project	No Brown Gelatinous Precipitate	
	403-2.1.a	C	Course Aggregate	ASTM C131 (Mod. Los Angeles)	Percent of Wear	Source	1/project	<40%	
				ASTM C88	Sodium Sulfate Soundness Loss	Source	1/project	<12% or <18% after 5 cycles	
					Fractured Faces	Source	1/project	>75% by weight having 2 or more fractured faces and >85% by weight having at least 1 fractured face.	Achieved by crushing.
				ASTM D4791	Flat, elongated, and flat and elongated particles	Source	1/project	<10% by weight	
	403-2.1.b	C	Fine Aggregate	ASTM D4318	Plasticity Index (PI) and Liquid Limit (LL)	Source	1/project	PI < 6 LL < 25	
				ASTM C88	Soundness Loss (after 5 cycles)	Source	1/project	<10% (for sodium sulfate) or magnesium sulfate)	
				ASTM C142	Clay lumps and friable particles	Source	1/project	<1% by weight	
			Natural Sand (if used)	ASTM D1073	Standard spec for Fine Aggregate (Grading, fineness, and other)	Source	1/project	Must meet requirements of ASTM D1073	Applies if natural sand is used.
			Natural Sand (if used)	ASTM D4318	Plasticity Index (PI) and Liquid Limit (LL)	Source	1/project	PI < 6 LL < 25	Applies if natural sand is used.
	403-2.2	C	Mineral Filler (if used)	ASTM D242	Standard spec for Mineral Filler	Source	1/project	Must meet requirements of ASTM D242	If filler in addition to that naturally present in aggregate, is necessary, this applies.
	403-2.3	C	Asphalt Cement Binder	ASTMD6373	Standard Spec for Asphalt Cement Binder	Source	1/project	Munst meet requirements of ASTM D6373 for PG 64-28	Include manufacturer Certificate of Compliance in mix design. Supplier's certified test report provided to engineer for each load delivery to mix plant. If binder modified after delivery to mix plant, provide certified test report
	403-2.4	C	Anti-Stripping Agent or Additive	Anti-Stripping Agent shall be heat stable, not contain no harmful ingredients, and shall be added in recommended proportion by approved method, and APPROVED BY THE DEPARTMENT		Applies if anti-stripping agent or additive is used			
	403-3.2	C	HMA Job Mix Formula (JMF)	Asphalt Institutes MS-2 Mix Design Method	Using: a. Total combined aggregate gradation, individual gradation of all aggregate stockpiles, and percent by weight of each stockpile used in the JMF b. Percent of Asphalt Cement c. Asphalt performance grade and type of modifier (if used) d. Number of gyrations e. Laboratory mixing temperature f. Laboratory compaction temperature g. Temperature-viscosity o fthe PG binder showing acceptable range of mixing and compation temperatures (for modified binders include supplier recommended mixing and compaction temperatures) h. Plot of the combined gradient on the 0.45 power gradation curve i. Graphical plots of air voids, VMA, and unit weight versus asphalt content. j. Specific gravity and absorption of each aggregate used k. Percent natural sand l. Percent fractured faces m. Percent by weight of flat particles, elongated particles, and flat and elongated particles n. Tensile Strength Ratio (TSR) results o. Anti-Strip agent (if required) p. Date JMF was developed (must not be from prior construction season and less than 90 days prior to production). q. Percentage and properties of RAP, if used (asphalt content, binder grade, gradation, and source of RAP stockpiles)		Submitted > 30 days prior to start of paving operations	If TSR <75, use anti stripping agent to achieve >75.
				ASTM D4867	Tensile Strength Ratio	Plant	1 per JMF used	Tested at 20-80% saturation	
				Contractor shall submit a laboratory mixing design consisting of 3 samples prepared at optimum asphalt content. The average of these results will indicate conformance with the JMF requirements of Tables 1 and 3.					
				Table 1: Gyratory Design Criteria (75 gyrations) Target Air Voids = 3.5% VMA minimum 15% Gradation meeting Table 3 Gradation					
			HMA	Gyratory Design Using 75 Gyrations	Target Air Voids	Plant HMA Samples	3 per JMF	3.50%	
					Voids in Mineral Aggregate (VMA)			15% (minimum)	
			HMA	ASTM D5821 or D2172	Asphalt Content	HMA Samples	3 per JMF	5.0-7.5% (Stone or Gravel); 6.5-9.5% (Slag)	Use ASTM D6307 is D2172 correction factor is >1.0.
			HMA	ASTM C136 and C117	Gradation	Plant Samples	3 per JMF	Table 3	

Table 1: SUMMARY OF SUBMITTALS

Specification	Spec Section	Submitted By	Material	Test Standard	Test Required	Sampling Location	Minimum Test Frequency	Requirements	Notes
	403-3.4	C	Recycled Asphalt Pavement (RAP)	RAP Not Used					
	403-4.11	C	Laydown Plan: Contractor shall submit a laydown plan prior to placement of HMA						Should be designed to minimize cold joints in pavement.
	403-5.1	C	Contractor Quality Control Plan: Contractor shall not be allowed to place test section until Contractor Quality Control Program has been approved. (401-3.5)	See section 403-5.1 for minimum plan elements.					
P-602, Bituminous Prime Coat		C	Asphalt	ASTM D977, D2397, D2027 or D2026	Asphalt Type Selection and Use	Source	1 / Project	Conforms to test method.	
	602-2.1	C	Bituminous Material	ASTM D3628	Use of Emulsified Asphalts	Source	1 / Project	Herbicide Product	
	602-2.2	C	Herbicide	(ASTM D3628) Selection and Use of Bituminous Material	ASTM D977, D2028 or D2397	Source	1 / Project	Conforms to test method.	
P-603, Bituminous Tack Coat	603-2.1	C	Bituminous Material	ASTM D3628	Use of Emulsified Asphalts	Source	1 / Project	Herbicide Product	
P-610, Structural Portland Cement Concrete	610-2.1.a.1	C	Fine and Coarse Aggregate	ASTM C1260	Alkali Reactivity of Aggregates	Source	1 / Coarse Aggregate; 1 / Fine Aggregate	<.1% at 28 days	
	610-2.1.a.2.3	C	Fine and Coarse Aggregate	ASTM C1567	Alkali Reactivity of Aggregates	Source	1 / Project	<.1% at 28 days	Combine Fine and Coarse Aggregate.
	610-2.2 and 610-2.3	C	Coarse Aggregate	ASTM C666	Freeze/Thaw Test	Lab/Source	1 / Project	Durability factor ≥ 95.	
	610-2.2 and 610-2.3	C	Fine and Coarse Aggregate	ASTM C33	Concrete Aggregates	Source	1 / Coarse Aggregate; 1 / Fine Aggregate	Conform to test method.	
	610-2.2 and 610-2.3	C	Fine and Coarse Aggregate	ASTM C136	Sieve Analysis	Source	1 / Coarse Aggregate; 1 / Fine Aggregate	Sieve Table	
	610-2.4	C	Cement	ASTM C150	Portland Cement	Source	1 / Project	Type II	
	610-2.6.a	C	Air-Entraining Admixture	ASTM C260	Air-Entraining Admixtures for Concrete	Source	1 / Project	Conform to test method.	
	610-2.6.b and 610-2.6.c	C	Chemical Admixture	ASTM C494	Chemical Admixtures	Source	1 / Project	Retarding shall meet Type A, B, or D; Set accelerating shall meet Type C. Calcium chloride and admixtures containing calcium chloride shall not be used.	
	610-2.7	C	Joint Filler	ASTM D1751 or ASTM D1752	Preformed Joint Filler	Source	1 / Project	Conform to test method.	
	610-2.9	C	Steel-Welded Wire Reinforcement	ASTM A1064	Standard Specification for Steel-Welded Wire Reinforcement	Source	1 / Project	Conform to test method.	Formerl ASTM A185.
	610-2.9	C	Billet-Steel Bars	ASTM A615	Deformed and Plain Billet-Steel Bars.	Source	1 / Project	Grade 60	
	610-2.10	C	Curing Material	ASTM C309	Liquid Membrane-Forming Compounds	Source	1 / Project	Type 2, CL B	
	610-3.2	C	PCC	ASTM C39	Strength of Cylindrical Concrete Specimens	Source/Lab	1 / Project	Shall develop a compressive strength of 3500psi in 28 days.	
	610-3.2 and 610-3.6	C	PCC	ASTM C143	Slump Test	Source	1 / Project	Slump not more than 4"	
	610-3.2	C	PCC	ASTM C231	Air Content Test	Source	1 / Structure	Concrete shall contain %5 of entrained air +1%	
		C	Epoxy-Coated Steel Epoxy-Coated Steel Bars	ASTM A775 or ASTM A934	Reinforcing Bars	Source	1 / Project	Conform to test method.	
		C						Mix Design	
P-620, Runway And Taxiway Marking	620-2.2	C	Paint			Source	Project	Paint Type	
	620-2.2.a	C	Paint	FED SPEC TT-P-1952F	Paint Spec.	Source	1 / Project	Conform to test method.	
	620-2.3	C	Reflective Media	FED SPEC TT-B-1325D	Reflective Media	Source	1 / Project	Conform to test method.	
T-901, Seeding	901-2.1	C	Seed	Fed Spec JJ-S-181	Type	Source	Project	Seed blend/quantity of pure live seed.	
	901-2.2	C	Fertilizer		Type	Source	Project	Fertilizer.	
T-905, Topsoiling	905-2.1	C	Topsoil	ASTM C117	Materials Finer Than No. 200 Analysis	Source	Project		
	905-2.1	C	Topsoil		pH	Source	Project	pH	
	905-2.1	C	Topsoil		% of Organics		Project	% of organics.	
Underground Power Cables for Airport	905-2.1	C	Cable						Verify that all items brought to Site for FAA work have submittals.
		C	Connectors						
		C							Send sample splices to Engineer for review.
Airport Underground Electrical Duct Banks and Other Conduits		C	Conduit & J-boxes						Verify that all items brought to Site for FAA work have submittals.
Submittals		C							Verify that materials brought to the site have been submitted for review.

APPENDIX D: QUALITY CONTROL TESTING (BY CONTRACTOR)

Table 2: QUALITY CONTROL (by Contractor)

Specification	Spec Section Material		Test By	Test Procedure	Test Required Locations	Sampling	Minimum Test Frequency	Requirements	Notes
P-101, Removal of Existing Pavement		C		None	None				Pulverized materials stockpile and reuse
P-152, Excavation, Subgrade, and Embankment		C		None	None				as subbase
P-401, Hot Mix Asphalt (HMA) Pavements	401-6.3.a	C	Asphalt Content	ASTM D6307 (or ASTM D2172)	Asphalt Content	During Production	2 / lot	5-7% (Stone or gravel) 6.5%-9.5% (Slag)	If pay factor in ASTM D6307 >1.0, use ASTM D2172.
	401-6.3.b	C	Aggregate	ASTM D2444, C136, and C117	Gradation	During Production	2 / lot	See Table 3	
	401-6.3.c	C	Aggregate	ASTM C566	Moisture Content of Aggregate	During Production	1 / lot		
	401-6.3.d	C	HMA	ASTM D1461 (or AASHTO T329 when conventional, overtermined by microwave)	Moisture Content of HMA	During Production	1 / lot	<0.5% (401-4.9	
	401-6.3.e	C	Binder and HMA	Manual	Temperature plan, and HMA	Binder in storage tank HMA at job site	4 / lot	Within limits of JMA	
	401-6.3.f	C	HMA	ASTM 2950	In-Place Density Monitoring	In-place	As needed to ensure density requirements are met	Mat 96.3-101.3% Joint 93.3%	
	401-6.3.g, Additional Testing	C	Contractor may perform other testing as desired to ensure quality standards are met.						
	401-6.3.h, Monitoring	C	Engineer has the right to monitor any or all of the Constractor's QC testing.						
	401-6.6, Control Charts	C	HMA	Aggregate Gradation Asphalt Content VMA	Contractor to maintain linear control charts both for individual measurements and range. See 6.5.a for Individual measurement control chart limits and 6.5.b for Range control chart limits.				
	401-6.6, Quality Control Reports	C	Contractor shall maintain records and submit reports daily (See General Conditions, Section 100).						
P-403, Asphalt Mix Pavement Base Course	403-6.3.a	C	Asphalt Content	ASTM D6307 (or ASTM D2172)	Asphalt Content	During Production	2 / lot	5-7% (Stone or gravel) 6.5%-9.5% (Slag)	If pay factor in ASTM D6307 >1.0, use ASTM D2172.
	403-6.3.b	C	Aggregate	ASTM D2444, C136, and C117	Gradation	During Production	2 / lot	See Table 3	
	403-6.3.c	C	Aggregate	ASTM C566	Moisture Content of Aggregate	During Production	1 / lot		
	403-6.3.d	C	HMA	ASTM D1461 (or AASHTO T329 when conventional, overtermined by microwave)	Moisture Content of HMA	During Production	1 / lot	<0.5% (401-4.9	
	403-6.3.e	C	Binder and HMA	Manual	Temperature plan, and HMA	Binder in storage tank HMA at job site	4 / lot	Within limits of JMA	
	403-6.3.f	C	HMA	ASTM 2950	In-Place Density Monitoring	In-place	As needed to ensure density requirements are met	Mat 96.3-101.3% Joint 93.3%	
	403-6.3.g, Additional Testing	C	Contractor may perform other testing as desired to ensure quality standards are met.						
	403-6.3.h, Monitoring	C	Engineer has the right to monitor any or all of the Constractor's QC testing.						
	403-6.6, Control Charts	C	HMA	Aggregate Gradation Asphalt Content VMA	Contractor to maintain linear control charts both for individual measurements and range. See 6.5.a for Individual measurement control chart limits and 6.5.b for Range control chart limits.				
	403-6.6, Quality Control Reports	C	Contractor shall maintain records and submit reports daily (See General Conditions, Section 100).						
P-602, Bituminous Prime Coat		C			None				
P-603, Bituminous Tack Coat					None				
P-610, Structural Portland Cement Concrete	610-2.3	C	Fine Aggregate	ASTM C33	Gradation	Source	1/ Project	Blending will be permitted to meet the gradation requirements for fine aggregate.	
	610-2.3	C	Cement	ASTM C150, Type I or II		Source	1/ Project		
	610-2.7a	C	Water	ASTM C1602		Source	1/ Project		
	610-2.7a	C	Admixture	ASTM 260	Air Entrainment	Source	1/ Project	Type F and G high range water reducing admixtures and ASTM C494 shall not have used.	
	610-2.7a	C	Admixture	ASTM C494, Type A, B or D	Water Reducer	Source	1/ Project	Shall meet requirement ASTM C494 Type C containing calcium chloride.	Do not use calcium chloride and admixture
	610-2.7a	C	Admixture	ASTM C494, Type A, Other chemical B or D admixtures		Source	1/Project		

Table 2: QUALITY CONTROL (by Contractor)

Specification	Spec Section Material		Test By	Test Procedure	Test Required Locations	Sampling	Minimum Test Frequenc	Requirements	Notes
		C	PCC	ASTM C143	Slump Test		1 / structure	Slump not more than 4"	RPR to monitor test.
		C	PCC	ASTM C231	Air Content		1 / structure	5% ± 1%	RPR to monitor test.
P-620, Runway And Taxiway Marking		C			None				
T-901, Seeding		C			None				
Underground Power Cables for Airport		C		Submerged reel testing				See spec.	Test FAA per C114 & C503
Underground Electrical Duct Banks and Conduits		C						See spec.	Test FAA per C114 & C503
Other Submittals		C			None				

APPENDIX E: ACCEPTANCE TESTING/QUALITY ASSURANCE (BY ENGINEER)

Table 3: QUALITY ASSURANCE (by Engineer)

Specification	Spec Section	Test By	Material	Test Procedure Required	Test	Sampling Locations	Minimum Test Frequency	Requirements	Notes
C-102, Temp Air & Water Pollution, Soil Erosion, and Siltation Control		E		None	None				
C-110, Surface Preparation	None	E							
P-152, Excavation, Subgrade, and Embankment	152-2.6	E	Subgrade	ASTM D698	Nuclear Density Test	In-Place	1 / 1000 SY	Top 12 inches of subgrade shall be compacted to no less than 95% maximum desnity for cohesive soils	Reference % water requirement
	152-2.5	E	Subgrade		Proof Rolling	In-Place	On compact in place layer	>1 inch or engineer discretion shall be loaded to min 30,000lbs; tires min 125 psi	Tire
	152-2.9	E	Subgrade	ASTM D1557	Proctor	Source	1 per material encountered	removed or reworked	of
	152-2.13	E	Subgrade	Straight-Edge Grade Tolerance	Surface smoothness	In-Place	Grid Spacing at 50-ft.	≤1/2" deviation (using 12' straight-edge); ±0.05' from true grade.	

Table 3: QUALITY ASSURANCE (by Engineer)

Specification	Spec Section	Test By	Material	Test Required	Procedure	Test	Sampling Locations	Minimum Test Frequency	Requirements	Notes
P-401, Hot Mix (HMA) Pavements	401-5	E	Plant HMA	ASTM D3203	Air Voids	3 specimens from 1 set of 3 specimens	During production from trucks either at plant or onsite.	1 set of per sublot	2-5%	Based on Theoretical Maximum Specific Gravity.
				ASTM D6925	Lab Compacted Specimens	set of 3 Specimens from 1 Bulk Specific Gravity of Lab Compacted Specimen	During production from trucks either at plant or onsite.	1 per sublot	See Table 1, 401-3.2 for number of gyrations.	
				ASTM D6752	Bulk Specific Gravity of Compacted Specimens	ASTM D2726 or ASTM D6752	During production from trucks either at plant or onsite.	1 set of 3 specimens per sublot		
				ASTM D2041	Theoretical Maximum Specific Gravity	1 set of 3 specimens from production trucks either at plant or onsite.	During production from trucks either at plant or onsite.	1/sublot		
	401-6	C	In-Place HMA	ASTM D979	Mat density Coring	Engineer's random basis according to ASTM D979	Engineer's random basis according to ASTM D979	1/sublot	Minimum 5" diameter, not closer than 1' from joint.	Contractor responsible for coring using diamond core drill bit
					Joint density coring			1/sublot	Minimum 4" diameter, centered on joint.	
		E		ASTM D2726 or ASTM D6752	Bulk Specific Gravity of In-Place Samples	ASTM D3665	Cores from finished HMA	1/sublot for Mat and Joint		See 9.1.b(4) for correct test
		E		ASTM D3203	Air Voids	Cores from finished HMA	Cores from finished HMA	1/sublot	2-5%	Based on Theoretical Maximum Specific Gravity
		E		Mat Density	Core Bulk Specific Gravity / Lab Specimen Bulk Specific Gravity	Mat % Compaction = Mat Core Bulk Specific Gravity / Lab Specimen Bulk Specific Gravity	Cores from finished HMA	1/sublot	>96.3% and <101.3 %	
		E		Joint Density	Joint Core Bulk Specific Gravity / Lab Specimen Bulk Specific Gravity	Joint Compaction = Joint Core Bulk Specific Gravity	Cores from finished HMA	1/sublot	>93.3 %	
	401-6	E	In-Place HMA	Visual From Cores	Thickness	Bulk Specific Gravity	Cores from finished HMA	1/sublot	Single Sample Defiency 1/4" max avg thickness shall not be less than indicated lift	
		E		12' Straightedge (perpendicular to Longitudinal	Smoothness	Transverse	50' intervals	50' intervals	<1/4" Variance	
		E		12' Straightedge	Smoothness	Paving Joints between Lots	Cut joints per Engineer	Prior to production		
		E		12' Straightedge	Short Section (<200' lot length) Longitudinal Smoothness	Parallel to CL of paving and at widths < 20', center of paving lane, 1/3rd points when paving lane is finished	Full length of short lot section		<1/4" Variance	Shall not be made through crosses or cross slope transitions.
		E		Licensed and Stamped Survey	Grade	Lay out HMA at 50' intervals longitudinally, and transversely at each grade	Every day during paving	Within 1/2" of design		Contractor to submit data to engineer the following work date applicable information on Number and scan batch tickets.
		E				Lab but not Random from production trucks either at plant or on site	Every 50th Truck	Collect batch tickets		Theoretical
				ASTM D3203	Air Voids	3 specimens from 1 set of 3 specimens	During production from trucks either at plant or onsite.	1 set of per sublot	2-5%	Based on Maximum Specific Gravity.

Table 3: QUALITY ASSURANCE (by Engineer)

Specification	Spec Section	Test By	Material	Test Required	Procedure	Test	Sampling Locations	Minimum Test Frequency	Requirements	Notes
P-403	403-5	E	Plant HMA	ASTM D6925	Lab Compacted set of 3 specimens	Specimens prepared from	During production from trucks either at plant or on site.	1 per sublot	See Table 1, 401-3.2 for number of gyrations.	
				ASTM D2726 or ASTM D6752	Bulk Specific Gravity of Lab Compacted Specimens	1 set of 3 specimens	During production from trucks either at plant or on site.	1/sublot		
				ASTM D2041	Theoretical Maximum Specific Gravity	Sample from	During production from trucks either at plant or on site.	1/sublot		
P-403	403-6	C	In-Place HMA	ASTM D979	Mat density Coring	Engineer to select random basis according to ASTM D3665	Cores from finished HMA	1/sublot	Minimum 5" diameter, not closer than 1' from joint.	Contractor responsible for coring using diamond core drill bit.
					Joint density coring			1/sublot	Minimum 4" diameter, centered on joint.	
		E		ASTM D2726 or ASTM D6752	Bulk Specific Gravity of In-Place Samples	ASTM D3665	Cores from finished HMA	1/sublot for Mat and Joint		See 9.2.b(4) for correct test to be used on Theoretic Maximum Specific Gravity
		E		ASTM D3203	Voids		Cores from finished HMA	1/sublot	2-5%	
		E		Mat Density	Core Bulk Specific Gravity / Lab Specimen Bulk Specific Gravity	Mat % Compaction =		1/sublot	>96.3% and <101.3 %	
		E		Joint Density	Joint Cores / Lab Specimen	% Compaction = Bulk Specific Gravity		1/sublot	>93.3 %	
	403-6	E	In-Place HMA	Visual From Cores	Thickness	Bulk Specific Gravity	Cores from finished HMA	1/sublot	Single Sample Deficiency 1/4" max avg thickness shall not be less than indicated lift thickness.	
		E		12' Straightedge (perpendicular to	Smoothness	Transverse	Paving Joints	50' intervals	<1/4" Variance	
		E		12' Straightedge	Smoothness	Longitudinal	Between Lots	50' intervals per lot (or less per Engineer)	Prior to production	
		E		12' Straightedge	Short Section (<200' length) Longitudinal Smoothness	Parallel to CL of paving and at widths <20', Center or Quarter Point when paving lane is greater than 20'	Joints and finished HMA at 50' intervals, all lots, both directly, and transversely at each grade	Full length of short lot section	<1/4" Variance	Shall not be made through changes in cross slope transitions.
		E		Licensed and Stamped Survey	Grade			Every day during paving 1/2" of design	Within	Contractor to submit data to engineer the following date applicable information on batch tickets.
		E				Brake but not less than 50' from	Batch Plant or either at trucks plant or on site	Every Truck	Collect batch tickets	
P-602, Bituminous Prime Coat		E			Monitor application rate.		Site			Number and scan to monitor.
P-603, Bituminous Tack Coat		E			Monitor application rate.		Site			RPR to monitor.
P-610, Structural Portland Cement Concrete	610-2.1.a	E	PCC	ASTM C1260	Reactivity		Source	1/ Project	Expansion of test specimens shall not exceed 0.08% at 16 (testing) days. Must test 28 days from	
	610-2.2	E	PCC	ASTM C33	Gradation		Source	1/ Project	Coarse Aggregate Requirements	Testing 20 years of the same gradation with no history of D-Cracking
	610-2.2.1	E	PCC	ASTM C666	D-Cracking		Source	1/ Project	Surface recor supplied	

Table 3: QUALITY ASSURANCE (by Engineer)

Specification	Spec Section	Test By	Material	Test Procedure Required	Test	Sampling Locations	Minimum Test Frequency	Requirements	Notes
Concrete	610-2.3	E	Fine Aggregate	ASTM C33	Gradation	Source	1/ Project	Blending will be permitted to meet requirements for the gradation aggregate.	
	610-3.2	E	PCC	ASTM C39	Compressive Strength Cylinders		1 / structure	Develop compressive strength of 3500psi in 28 days.	
	610-3.2	E	PCC	ASTM C143	Slump Test		1 / structure	Not more than 4".	
	610-3.21 and 610-3.20	E		ASTM C231	Air Content Weather Temperature	Site	As needed throughout placement or change.	5% air ± 1% See spec.	
P-620, Runway And Taxiway Marking	620-3.5	E							Layout Tolerance
	620-3.5	E	Paint						Paint Appl. Rate
	620-3.5	E	Beads						Glass Bead Appl. Rate
	620-3.5	E							Retro-reflectance.
T-901, Seeding	620-3.8	E			None			RPR to collect seed bag tags to verify blend and rate.	
T-905, Topsoiling		E			None			Refer to observe QC test.	
Underground Power Cables for Airport		E			Insulation resistance				Test FAA per plan sheets C114 & C503
Underground Electrical Duct Banks and Conduits		E			None				Test FAA per plan sheets C114 & C503
Other Submittals		E							Verify all delivered material is per Submittals and Specifications

Parkhill

MIDLAND INTERNATIONAL AIR & SPACE PORT (MAF)
Runway Blast Pad Improvements
Midland Texas
2pm (CST), Wednesday, July 17, 2024

Parkhill Project No. 01623422

Bidder	Bid Bond	Proposal Form	Addendum No. 01	Total Bid
Jones Bros. Dirt & Paving Contractors, Inc.	X	X	X	$ 2,272,588.85

City Council Meeting

Item Number: 15

Meeting Date: September 24, 2024

To: City Council / City Manager

From: Justine Ruff, Director

Subject: **MOTION AUTHORIZING THE APPROPRIATION AND TRANSFER OF FUNDING IN THE AMOUNT OF $50,000.00 FROM THE AIRPORT PFC FUND BALANCE TO THE PASSENGER FACILITY CHARGE APPLICATION & AMENDMENT PROJECT (900346); SAID FUNDS SHALL BE UTILIZED TO PROVIDE FOR CERTAIN AUDITING AND ADMINISTRATIVE COSTS ASSOCIATED WITH SAID PROJECT (DISTRICT 4) (AIRPORTS) (TRANSPARENT & CONSISTENT COMMUNICATION)**

Purpose:

Motion authorizing the appropriation of additional funding to the MAF Passenger Facility Charge (PFC) Application & Amendment Project (#900346) for auditing and administrative costs.

Recommended City Council Action:

Approve

Fiscal Impact:

City/Airport Share (100% PFC) - $50,000.00

Strategic Priority:

(Transparent & Consistent Communication)

Appropriation Language:

$50,000 will be appropriated from the Airport PFC Fund Balance and transferred to the Passenger Facility Charge App & Amendment Project (900346).

Discussion:

Several PFC Applications will need to be amended with the FAA. The appropriation of $50,000 will cover the needed application changes and subsequent meetings with the FAA for approval, as well as any yearly auditing expenses. These funds will be reimbursed by 100% Passenger Facility Charge funding.

City Manager's Office

City Council Meeting

Item Number: 16

Meeting Date: September 24, 2024

To: City Council / City Manager

From: Sara Harris,

Subject: RESOLUTION APPROVING AN ECONOMIC DEVELOPMENT AGREEMENT BETWEEN THE MIDLAND DEVELOPMENT CORPORATION AND STARFIGHTERS SPACE TEXAS, LLC, AS AUTHORIZED BY CHAPTER 501 OF THE TEXAS LOCAL GOVERNMENT CODE (DISTRICT 4) (CITY MANAGER) (STRONG ECONOMY WITH MORE QUALITY JOBS)

Purpose:

The Board of Directors of the Midland Development Corporation approved at a regular meeting on September 9, 2024 a resolution authorizing the execution of an economic development agreement with Starfighters Space Texas, LLC as authorized by Chapter 501 of the Texas Local Government Code; and authorizing payment therefor.

Recommended City Council Action:

Approve

Fiscal Impact:

$2,051,560.00

Strategic Priority:

(Strong Economy with More Quality Jobs)

Discussion:

Starfighters Space will operate its fleet of F-104 and F-4 aircraft out of Midland for commercial and defense testing. Starfighters will create and maintain 23 full-time jobs in Midland by December 31, 2033, and will relocate at least $78,000,000.00 in capital assets to Midland by

December 31, 2027. MDC will reimburse relocation costs for relocating the aircraft in an amount not to exceed $2,051,560.00. MDC will provide hangar space at MAF, including short-term hangar space and constructing a new hangar at MAF. The hangar will be owned by MDC and subleased to Starfighters, with lease abatement for the term of the agreement as long as Starfighters meets and maintains its job creation and capital investment obligations.

Morris William Jr.

City Manager's Office

RESOLUTION NO. _____

RESOLUTION APPROVING AN ECONOMIC DEVELOPMENT AGREEMENT BETWEEN THE MIDLAND DEVELOPMENT CORPORATION AND STARFIGHTERS SPACE TEXAS, LLC, AS AUTHORIZED BY CHAPTER 501 OF THE TEXAS LOCAL GOVERNMENT CODE

WHEREAS, the Midland Development Corporation approved the execution of an economic development agreement with Starfighters Space Texas, LLC, as authorized by Chapter 501 of the Texas Local Government Code; and

WHEREAS, the City Council must consider and approve all economic development agreements approved by the Midland Development Corporation before the agreements can become effective; and

WHEREAS, the City Council finds it to be in the public interest to approve the economic development agreement between the Midland Development Corporation and Starfighters Space Texas, LLC;

NOW, THEREFORE, BE IT RESOLVED BY THE CITY COUNCIL OF THE CITY OF MIDLAND, TEXAS:

THAT the economic development agreement between the Midland Development Corporation and Starfighters Space Texas, LLC, which is attached hereto as Exhibit A and incorporated herein for all purposes, is hereby approved.

On motion of Council member _____, seconded by Council member _____, the above and foregoing resolution was adopted by the City Council of the City of Midland at a regular meeting on the _____ day of _____, A.D., 2024, by the following vote:

Council members voting "AYE":

Council members voting "NAY":

_____
Lori Merritt Blong, Mayor

ATTEST:

_____
Marcia Bentley-German, City Secretary

RECOMMENDED AND APPROVED:

_____
Tommy Gonzalez, City Manager

APPROVED AS TO FORM ONLY:

_____
John Ohnemiller, City Attorney

ECONOMIC DEVELOPMENT AGREEMENT

THIS ECONOMIC DEVELOPMENT AGREEMENT ("Agreement") is entered into by and between the MIDLAND DEVELOPMENT CORPORATION ("*MDC*"), a Type A corporation pursuant to Chapter 504 of the Texas Local Government Code, as amended, and STARFIGHTERS SPACE TEXAS, INCORPORATED, a Texas corporation ("*Company*").

I.
Recitals

A. Company is currently headquartered in Cape Canaveral, Florida, and is in the business of supersonic flight, supporting research and development, pilot training, space flight training and advanced scientific programs, including suborbital and orbital launches of experiments and small payloads.

B. Company requires additional flight locations and storage space to accommodate its expanding business activities and enterprises.

C. MDC and Company desire to set forth the terms and conditions upon which MDC will be provided certain incentives to Company as consideration for Company's (i) expansion of its business operations to the Midland International Air & Space Port, (ii) creation and retention of primary jobs within the corporate limits of the City of Midland, and (iii) relocation of certain capital assets and equipment at the Midland International Air & Space Port.

D. MDC and Company desire to collaborate to obtain FAA approval and certification of a high-speed airspace corridor between Midland International Air & Space Port and Spaceport America, utilizing supersonic aircraft owned by Company.

E. Company will exercise reasonable efforts to employ Midland residents and to advertise the availability of job openings in Midland, Texas. Additionally, when it is not possible to hire Midland residents, Company will exercise its best efforts to recruit new residents to live in Midland, Texas, and to advertise the availability of job openings in Midland, Texas.

F. Company anticipates relocating, creating, and/or maintaining twenty-three (23) Full-Time Jobs (as defined herein) at the Midland International Air & Space Port by December 31, 2033.

G. In addition to relocation, creation, and/or maintenance said Full-Time Jobs, Company anticipates that it will relocate at least $78,000,000.00 in capital assets and equipment to the Midland International Air & Space Port.

NOW, THEREFORE, in consideration of the premises and mutual covenants and agreements contained herein, and other good and valuable consideration, the receipt and sufficiency of which are hereby acknowledged, MDC and Company hereby agree as follows:

II.
Definitions

When used in this Agreement, capitalized terms not otherwise defined shall have the meanings set forth below:

A. *"Assets"* means Company's owned capital assets and equipment that are relocated to and utilized at the Midland International Air & Space Port. The Assets are more particularly described in **Exhibit A**, which is attached hereto and incorporated herein for all purposes.

B. *"Business"* means Company' commercial operations to be conducted at the Midland International Air & Space Port, including, but not limited to, its use as an inland base and testing location for Company's fleet of supersonic aircraft. The Business is more particularly described in **Exhibit B**, which is attached hereto and incorporated herein for all purposes.

C. "*Business Day*" Business Day shall mean each day, Monday through Friday, except to the extent any day is a holiday recognized by the federal government of the United States or a state holiday recognized by the State of Texas.

D. *"Effective Date"* means September 24, 2024.

E. *"Full-Time Job"* means a position of employment that requires an individual to: (i) work 1,620 hours per year, including allowance for vacation, sick leave, earned time off, and any other similar leave pursuant to Company's policies and practices; and (ii) spend a substantial amount of the individual's time performing job duties at the Midland International Air & Space Port. The term "Full-Time Job" may include independent contractors who receive an IRS Form 1099.

III.
Obligations of Company

A. **Asset Relocation Obligation.** Company shall relocate the Assets to a facility at the Midland International Air & Space Port in accordance with the following schedule:

1. Assets totaling $60,000,000.00 by December 31, 2025.

2. Assets totaling $78,000,000.00 by December 31, 2027.

The Assets shall be evidenced with the *Annual Certification* as provided in Section III.C. of this Agreement, no later than December 31st of each year during the term of this Agreement.

B. **Full-Time Jobs Obligation.** Company shall make commercially reasonable efforts to relocate, create, and/or maintain Full-Time Jobs in accordance with the following schedule:

1. Three (3) Full-Time Jobs as of December 31, 2026.

2. Ten (10) Full-Time Jobs as of December 31, 2030.

3. Fifteen (15) Full-Time Jobs as of December 31, 2031.

4. Twenty (20) Full-Time Jobs as of December 31, 2032.

5. Twenty-Three (23) Full-Time Jobs as of December 31, 2033.

Company shall maintain said Full-Time Jobs for the duration of the term of this Agreement. The failure to meet the Full-Time Jobs requirement contained in this Section shall not be considered a default of this Agreement.

C. **Annual Compliance Certifications.** For the period beginning on the Effective Date through December 31, 2024, and every for subsequent calendar year thereafter during the term of this Agreement (each a "*Compliance Year*"), Company shall submit a compliance certification (each an "*Annual Certification*") to MDC, as described in Section IX.B below. Each Annual Certification shall certify to MDC the following:

1. The total Full-Time Jobs created and maintained for the Compliance Year; and

2. The total Assets located at the Midland International Air & Space Port as of the last day of the Compliance Year.

Company shall submit an Annual Certification to MDC within sixty (60) days following the end of each Compliance Year.

D. **Continuous Operation of the Business.** Company shall initiate and thereafter continuously conduct its Business during the term of this Agreement.

E. **Hangar Leases.** The parties acknowledge Company's need for sufficient hangar space to store the Assets safely and securely. Furthermore, the parties acknowledge that, as of the Effective Date, a hangar facility with sufficient capacity to store the entirety of the Assets is not available for Company's use. Company's relocation of the Assets shall occur incrementally as additional hangar space becomes available for Company's use. Accordingly, the parties intend for this Section to provide a framework for the temporary, short-term, and long-term storage of the Assets at the Midland International Air & Space Port.

1. Temporary Hangar Lease. To accommodate the arrival of the first portion of Assets at the Midland International Air & Space Port, Company shall execute a temporary hangar lease or other similar agreement for the storage of the relocated Assets (the "*Temporary Hangar Lease*"). The Temporary Hangar Lease shall provide for Company's use of sufficient space to store the relocated Assets until such time that Company executes the

Short-Term Hangar Lease (as defined below) and takes possession of the leased premises that is the subject of the Short-Term Hangar Lease. Company shall be responsible for all costs associated with the Temporary Hangar Lease in accordance with the obligations of the MDC in section IV)B.

2. Short-Term Hangar Lease. The parties expect for certain hangar space located in the George H.W. Bush Hangar owned by the City of Midland, Texas (the "*City*") to become available for lease following the Effective Date. If said hangar space becomes available for lease, Company shall use its best efforts to enter into a short-term hangar lease or other similar agreement with City for Company's use of said hangar space to conduct its Business and for the storage of the Assets (the "*Short-Term Hangar Lease*"). Provided sufficient space in the George H.W. Bush Hangar is available for lease, Company shall endeavor to lease sufficient space to accommodate all Assets anticipated to be relocated to the Midland International Air & Space Port under this Agreement. The Short-Term Hangar Lease shall provide for Company's use of sufficient space to conduct its Business and store the relocated Assets until such time that Company executes the Long-Term Hangar Lease (as defined below) and takes possession of the New Hangar (as defined in Section IV.C below). Company shall be responsible for all costs associated with the Short-Term Hangar Lease. The Short-Term Hangar Lease shall provide for fuel storage proximate to the hangar that is readily accessible by Company.

3. Long-Term Hangar Sublease. Subject to the satisfaction of MDC's obligations contained in Section IV.C, Company shall execute a long-term hangar sublease with MDC for Company's use of the New Hangar for the storage of the Assets and to conduct its Business (the "*Long-Term Hangar Sublease*"). The Long-Term Hangar Sublease shall provide for Company's use of the New Hangar throughout the term of this Agreement. The Long-Term Hangar Sublease shall provide for fuel storage proximate to the hangar that is readily accessible by Company.

IV.
Obligations of MDC

A. **Relocation Costs.** MDC shall provide Company with certain funding for the costs associated with Company's relocation of the Assets from Cape Canaveral, Florida, to the Midland International Air & Space Port (the "*Relocation Costs*") as contemplated by Section III.A. The Relocation Costs are more particularly described in **Exhibit C**, which is attached hereto and incorporated herein for all purposes. Notwithstanding any contrary provision contained herein, MDC shall not be required to reimburse Company for the Relocation Costs in excess of Two Million, Fifty-One Thousand, Five Hundred Sixty and No/100 Dollars ($2,051,560.00) in the aggregate. MDC shall pay Relocation Costs within ten (10) days after receiving written notice from Company that a relocation has commenced and is in progress. The written notice shall contain a summary of the relocation operations, including a timeline, budget, and list of incurred and anticipated expenses. Relocation Costs pre-paid to Company shall be verified by invoices after a relocation is complete. Company shall submit all invoices relating to a relocation operation within sixty (60) days

following the completion of the same. Following MDC's receipt of a relocation invoice, MDC shall determine whether the amount pre-paid to Company exceeds the actual invoice total for the relocation. If MDC determines that the pre-paid amount exceeds the actual invoice total, then the MDC Executive Director shall notify Company in writing of such excess payment. Company shall remit payment to MDC in the amount of the excess payment, which shall become due and payable thirty (30) days after the date the written notice of excess payment is sent by MDC.

B. **Hangar Space Reimbursement.** During the terms of the Temporary Hangar Lease and Short-Term Hangar Lease, MDC shall provide Company a monthly reimbursement in an amount not to exceed Eight Thousand and No/100 Dollars ($8,000.00) to be used exclusively for the temporary and short-term storage of the Assets at the Midland International Air & Space Port. MDC shall make such monthly reimbursement payments to Company as it incurs and pays the rental payments pursuant to the Temporary Hangar Lease and Short-Term Hangar Lease. Each monthly reimbursement payment shall become due and payable thirty (30) days after the date MDC receives a reimbursement invoice evidencing Company's payment of the monthly rent due under the Temporary Hangar Lease or Short-Term Hangar Lease, as applicable. Notwithstanding the foregoing, MDC shall have the right to prepay any monthly reimbursement payment(s) due under this Agreement at the discretion of the MDC Chairman.

C. **New Hangar Construction; Sublease to Company.** MDC shall seek to enter into a long-term ground lease with City for the lease of certain City-owned real property located at the Midland International Air & Space Port (the "*Property*"). The Property is further described and depicted on **Exhibit D**, which is attached hereto and incorporated herein for all purposes. Following MDC's execution of the long-term ground lease for the Property, which shall be for a term of not less than ten (10) years, MDC shall construct (or cause to be constructed) a new hangar facility on the Property with approximately 100,000 square feet of usable space (the "*New Hangar*"). Upon the completion of the New Hangar, MDC and Company shall execute the Long-Term Hangar Sublease that contemplates Company's occupancy of the New Hangar for the purpose of conducting its Business and accommodating the storage of the Assets. Company's sublease of the New Hangar shall be conditioned upon Company's continuous and exclusive use of the New Hangar as contemplated by this Agreement and the Long-Term Hangar Sublease. Company shall receive lease abatement in the New Hangar from the MDC for the term of the agreement so long as the Company certifies its obligations as defined in Article III are met and maintained.

V.
MDC's Remedies Upon Default

The parties agree that if Company defaults under this Agreement, MDC shall be entitled to pursue, in addition to those remedies to which it may be entitled at law or in equity, those remedies specifically provided for and enumerated in the Long-Term Hangar Sublease and this Agreement. MDC shall have all rights and remedies set forth in the Long-Term Hangar Sublease, this Agreement, and those provided by law.

VI.
Cure Period

In lieu of exercising the right and remedies referenced in Section V after MDC gives Company written notice of its default as set forth in this Agreement, MDC may, in its sole and absolute discretion, elect to allow Company a period not to exceed ninety (90) days to cure any such default. Any such election by MDC to allow Company the opportunity to cure such a default shall in no way be construed or operate as a waiver of any MDC right contained in this Agreement or the Long-Term Hangar Sublease.

VII.
Term

Upon execution by the parties, this Agreement becomes effective on the Effective Date and shall terminate (i) on the tenth anniversary of the Effective Date, (ii) when terminated by mutual agreement of the parties, or (iii) when terminated as set forth in Section VIII or Section X.E. Notwithstanding any contrary provision contained herein, if MDC fails to execute a long-term ground lease for the Property by December 31, 2029 or fails to complete construction of the New Hangar by December 31, 2030 using commercially reasonable efforts, either party may terminate this Agreement by issuing thirty (30) days' written notice to the other party; upon such termination becoming effective, neither party shall have any further rights or obligations under this Agreement unless specifically provided for herein.

VIII.
Applicable Statutes, Rules, and Regulations

The parties acknowledge that the Midland International Air & Space Port and its owner, City, are subject to the Airport and Airway Improvement Act of 1982, as amended and recodified at 49 U.S.C. 47107(a)(1), as well as the Federal Aviation Administration's Airport Improvement Program. The parties further acknowledge that City is generally required to make the Midland International Air & Space Port available to users that participate in aeronautical activities and that City is prohibited from causing or permitting any activity that interferes with use of the Midland International Air & Space Port for aeronautical purposes. MDC has fully and completely disclosed the requirements referenced herein to Company. Company has satisfied itself of said requirements and warrants that it is entering into this Agreement subject to said requirements. MDC has made no warranty or representation that Company's activities at the Midland International Air & Space Port will be compliant with the requirements referenced in this Section. Company hereby represents and warrants that its Business and related activities contemplated to be conducted at the Midland International Air & Space Port comply with said requirements.

Notwithstanding any other provision contained in this Agreement, the parties agree that if the Federal Aviation Administration (the "*FAA*") determines that Company's Business and related activities contemplated to be conducted at the Midland International Air & Space Port do not comply with the requirements of 49 U.S.C. 47107(a)(1), the FAA's Airport Improvement Program, or any other applicable statute, rule, or regulation, that upon either party's notice of such determination, this Agreement shall automatically terminate in its entirety and be of no further

force or effect. Said automatic termination shall occur without penalty to either party. In the event of such automatic termination, the parties shall be fully discharged of all obligations due hereunder.

Company acknowledges that this Agreement is made subject to the above-referenced statues, rules, and regulations. MDC has not provided Company with any warranties as to its Business and related activities contemplated to be conducted at the Midland International Air & Space Port, and the applicable statutes, rules, or regulations referenced herein. Company acknowledges that MDC has not warranted: (i) the Midland International Air & Space Port for any particular use, or (ii) Company's quiet enjoyment of any portion of the Midland International Air & Space Port with regards to the provisions contained in this Section. Company acknowledges that the FAA may determine that Company's Business and related activities contemplated to be conducted at the Midland International Air & Space Port do not constitute aeronautical purposes. Company agrees to hold MDC and the City of Midland harmless if the FAA makes such a determination.

Notwithstanding any other provision contained in this Agreement, if Company creates any condition that does not conform to the purpose of Company's Business and related activities to be conducted at the Midland International Air & Space Port as contemplated herein, and said condition causes the FAA to determine that Company's Business and related activities do not comply with the requirements of 49 U.S.C. 47107(a)(1), the FAA's Airport Improvement Program, or any other applicable statute, rule, or regulation, and Company has exercised all reasonable administrative efforts to appeal said determination by the FAA, then this Agreement shall terminate and all rent payments contemplated by the Long-Term Hangar Sublease shall, at MDC's option, thereupon immediately become due and payable to MDC. Company shall be obligated to pay such accelerated notwithstanding MDC's election to pursue any remedy otherwise provided in this Agreement, the Long-Term Hangar Sublease, or by law.

IX.
Special Conditions

A. **Specific Obligations.** Notwithstanding any other provision hereof that may be interpreted otherwise, MDC's obligations due hereunder shall only consist of those specifically listed in Section IV. Company agrees that MDC shall not be required to observe any obligation or provide any incentive to Company other than those contained in Section IV.

B. **Certifications.** Company agrees to the following certification requirements:

1. As to the certifications required in Section III.B and Section III.C.1, Company shall provide reasonable evidence or supporting documentation. Documentation for employment numbers may be in the form of Texas Workforce Commission Employer Quarterly Reports, or certified employee rosters that show the hours worked and positions filled, or such other reports as may be agreed upon by MDC and Company. Upon request, MDC may review Company's Texas Workforce Commission Employer Quarterly Reports in Midland, Texas, but may not copy or retain a copy of said reports.

2. Company shall allow MDC reasonable access to the leased premises that are the subject of the Temporary Hangar Lease, Short-Term Hangar Lease, and Long-Term Hangar Sublease, as applicable and subject to any applicable security clearances imposed by the United States Government, for purposes of determining Company's compliance with the employment certifications given by Company, provided that such access shall be: (i) with prior written notice, (ii) accompanied by representatives of Company, and (iii) occur during normal business hours.

3. When requested in writing by MDC, Company shall provide a notarized statement in a form acceptable to MDC that, to Company's knowledge, Company is in compliance with each applicable provision of this Agreement.

4. All certifications required under this Agreement shall be signed and sworn to by Company's chief executive officer and chief financial officer before a notary and shall contain an appropriate jurat and statement that the information contained in the certification is true and correct.

5. Company shall maintain, during the term of this Agreement and for a period of three (3) years following expiration of the term, all records necessary to confirm that the Company is capable of meeting its obligations under this Agreement and that the Company has met its obligations under this Agreement relating to the Full-Time Jobs and Assets, including such records maintained by a parent company, affiliate, subsidiary or other related party, and including (as appropriate): (i) all payroll records and daily time sheets and other records of personnel utilization on work activities (including records on an hourly basis for personnel); (ii) invoices for materials and equipment; (iii) drawings, specifications, schedules, instructions, receipts; and (iv) agreements, subcontracts and purchase orders relating to the Assets. Upon reasonable advance-written notice, Company shall, subject to confidentiality and privacy obligations, make all such documents available to MDC for inspection, audit and copying, regardless of whether a dispute is then pending between the parties. Access shall be provided to MDC and/or the accounting firm designated by MDC, in its sole and absolute discretion, to perform such review during normal business hours in an adequate workspace. Upon receipt of a written request made by MDC, Company shall reimburse all reasonable costs incurred by MDC relating to the inspection, audit and copying of said documents.

C. **Covenants.** Company makes the following covenants to MDC and agrees that in the event of failure of Company to comply with such covenants, the breach of any one of which shall constitute an event of default, MDC may terminate this Agreement, at its sole and absolute discretion:

1. Company is a legal entity duly organized, validly existing and in good standing and is duly authorized to do business in the State of Texas.

2. The execution of this Agreement has been duly authorized by Company's board of directors or other governing body, or by officers empowered to execute such

agreements and bind Company, and is not in contravention of the provisions of Company's articles of incorporation or bylaws, or of any agreement or instrument to which Company is a party to or by which they may be bound, the breach of which would have a material, adverse effect on Company and its operations.

3. There are no bankruptcy proceedings currently pending by or against Company.

4. None of Company's assets are subject to any material lien, security interest or other encumbrance, except as reflected in writing and furnished to MDC prior to the Effective Date.

5. No certificate or statement delivered or to be delivered by Company to MDC under this Agreement or in connection with any transaction contemplated hereby contains any untrue statement of a material fact or fails to state any material fact necessary to keep the statements contained therein from being misleading in any material respect by reason of any omission.

D. **Suspension.** MDC, under the following circumstances and at its sole discretion, may terminate this Agreement:

1. The insolvency of Company. "Insolvency" shall have the meaning set forth in federal bankruptcy law.

2. The appointment of a receiver of Company, or of all or any substantial part of their property, and the failure of such receiver to be discharged within sixty (60) days thereafter.

3. The adjudication of Company as bankrupt, the filing by Company of a petition to be adjudged bankrupt, or a petition or answer seeking reorganization or admitting the material allegations of a petition filed against Company in any bankruptcy or reorganization proceeding.

E. **Additional Covenants.** If Company should fail to comply with any of the following provisions, and such failure continues for thirty (30) days following written notice to Company (each, an event of default), MDC may terminate this Agreement.

1. Company, or any affiliate of, or successor to Company, shall continuously conduct its Business and related activities at the Midland International Air & Space Port in accordance with Company's obligations set forth in this Agreement at all times during the term of this Agreement.

2. Company shall pay, or cause to be paid, before delinquent all ad valorem taxes assessed against the Property, any capital improvements thereon, and Assets to the taxing authorities having jurisdiction, as may be set forth in the Long-Term Hangar Sublease. In addition, Company shall pay before delinquent all employment, income, franchise and all other taxes to all local, state and federal entities.

3. Company shall, on a yearly basis during the term of this Agreement, provide MDC with tax certificates from Midland Central Appraisal District demonstrating that all taxes on the Property and capital improvements thereon (during the term of the Long-Term Hangar Sublease only), and the Assets have been paid in full to the current tax year.

4. Company shall obtain and maintain all necessary rights, licenses, and permits to carry on it Business and related activities at the Midland International Air & Space Port.

5. Company agrees that, as to all programs and activities arising out of this Agreement, it shall comply in all material respects with all Civil Rights Acts and specifically will not discriminate against any person on the basis of race, color, national origin, religion, age, sex, disability, or any other protected class of persons recognized under state or federal law.

6. Company agrees that it shall comply with Texas Government Code Section 2264.001 *et seq*., as amended.

F. **Interpretation of Terms & Obligations.** The parties acknowledge and agree the canon of construction that "any ambiguities are to be construed against the drafter" shall not be employed in the interpretation of this Agreement. Notwithstanding any other provision contained herein to the contrary, the parties agree that if there is a dispute regarding whether a particular item falls within the definition of "Full-Time Job" or "Asset," the parties shall negotiate and attempt to resolve the issue between the parties.

G. **Collaboration to Pursue State and Federal Funding.** The parties shall use commercially reasonable efforts to collaborate with each other in pursuing funding from state and federal sources for uses that include, but not limited to, employee training costs, employee relocation costs, and job creation incentives.

H. **High-Speed Airspace Corridor Approval and Certification.** The parties shall use commercially reasonable efforts to collaborate with third parties in obtaining the necessary data and approvals that will result in FAA approval and certification of a high-speed airspace corridor between Midland International Air & Space Port and Spaceport America.

X.
General Terms

A. **Entire Agreement.** This Agreement embodies the complete agreement of the parties hereto, superseding all oral or written, previous and contemporary agreements, excluding the Long-Term Hangar Sublease, between the parties relating to matters in this Agreement; and except as otherwise provided herein, this Agreement cannot be modified or amended without a written agreement of the parties.

B. **Legal Relationships.** The parties are not, and shall not be considered as, joint venturers, partners, or agents of each other and no party shall have the power to bind or obligate another, except as set forth in this Agreement. The parties agree not to represent to anyone that they are agents of one another or have any authority to act on behalf of one another. It is mutually understood and agreed that nothing in this Agreement is intended or shall be construed as in any way creating or establishing any partnership, joint venture, or agency between MDC and Company. Further, it is specifically understood and agreed that nothing in this Agreement is intended or shall be construed as creating a community of pecuniary interest or an equal right of control that would give rise to vicarious liability.

C. **No Third-Party Beneficiary.** The parties' approval of this Agreement does not create a third-party beneficiary. There is no third-party beneficiary to this Agreement. No person or entity that is not a party to this Agreement shall have any third-party beneficiary or other rights hereunder.

D. **Independent Contractor.** It is expressly understood and agreed that Company shall perform all work and services described herein as an independent contractor and not as an officer, agent, servant or employee of MDC; that Company shall have exclusive control of and the exclusive right to control the details of the services and work performed hereunder, and all persons performing the same; and shall be solely responsible for the acts and omissions of its officers, agents, employees, contractors and subcontractors; that the doctrine of *respondeat superior* shall not apply as between MDC and Company, its officers, agents, employees, contractors and subcontractors; and that nothing herein shall be construed as creating a partnership or joint enterprise between MDC and Company. No person performing any of the work and services described hereunder shall be considered an officer, agent, servant or employee of MDC. Company shall be independent contractors under this Agreement and shall assume all the rights, obligations and liabilities applicable to it as such independent contractors hereunder. MDC does not have the power to direct the order in which the work is done. MDC shall not have the right to control the means, methods or details of Company's work. Company shall assume exclusive responsibility for the work. Company is entirely free to do the work in its own way.

E. **Termination.** This Agreement may be terminated (i) by mutual agreement of the parties or (ii) by any party upon the failure of the other party to fulfill an obligation as set forth herein if the default is not cured within thirty (30) days following the issuance of written notice from the non-defaulting party reasonably specifying such default. Additionally, this Agreement may be terminated as specifically provided for in Section VIII herein.

A termination of this Agreement shall terminate the Long-Term Hangar Sublease. A termination of the Long-Term Hangar Sublease shall terminate this Agreement. A termination of this Agreement without liability to either party shall terminate the Long-Term Hangar Sublease without liability to either party. A termination of the Long-Term Hangar Sublease without liability to either party shall terminate this Agreement without liability to either party. Uncured defaults under either this Agreement or the Long-Term Hangar Sublease shall be deemed uncured defaults of the other agreement, and contractual

and legal termination procedures shall apply to both this Agreement and the Long-Term Hangar Sublease.

F. **Counterparts.** This Agreement may be executed in one or more counterparts, each of which will be deemed to be an original copy of this Agreement and all of which, when taken together, will be deemed to constitute one and the same agreement. The exchange of copies of the Agreement, and of the signature pages, by facsimile or electronic transmission shall constitute effective execution and delivery of this Agreement as to the parties and may be used in lieu of the original Agreement for all purposes. Signatures of the parties transmitted by facsimile or electronic mail (i.e., .pdf format) shall be deemed to be original signatures for any purpose(s) whatsoever.

G. **Governing Law & Venue.** The laws of the State of Texas shall govern, construe and enforce all rights and duties of the parties, including but not limited to tort claims and any contractual claims or disputes arising from or relating in any way to the subject matter of this Agreement, without regard to conflict of laws and rules that would direct application of the laws of another jurisdiction. All performance and payments made pursuant to this Agreement shall be deemed to have occurred in Midland County, Texas. All payments under this Agreement are deemed to have taken place in Midland County, Texas. The sole, exclusive, and mandatory venue for any claim, suit, dispute, or any other action arising from, relating to, or concerning in any way this Agreement shall be in Midland County, Texas.

H. **Legal Construction.** In case one or more of the provisions contained in this Agreement shall for any reason be held invalid, illegal or unenforceable in any respect, such invalidity, illegality or unenforceability shall not affect any other provisions hereof and this Agreement shall be construed as if such invalid, illegal or unenforceable provision had never been contained herein.

I. **Legal Compliance.** This Agreement is subject to all applicable municipal, county, state and federal laws, regulations, orders and rules and Company agrees that it will comply in all material respects with all such applicable laws, regulations, orders and rules of the State of Texas and other such governmental agencies. As used in this Agreement, the phrase "applicable law" is deemed to include the foregoing.

J. **Assignment.** This Agreement shall be binding upon the parties hereto and their successors and assigns. This Agreement may not be assigned by a party without the prior written consent of the other party.

K. **Force Majeure.** If either party is delayed, hindered in, or prevented from the performance of any obligation required under this Agreement by act of God, strike, lockout, hazardous material, latent defects, labor trouble, inability to procure materials, labor shortages, utility delays, pandemic, unseasonable weather affecting construction or operation, failure of power, riot, insurrection, war, national, regional or local emergency, MDC's inability to execute a long-term ground lease for the Property, the premature termination of the Temporary Hangar Lease or Short-Term Hangar Lease due to no fault of Company, or

other similar event beyond the reasonable control of the delayed party, and that is not the result of an intentional act or misconduct (each, a "*Force Majeure*" event), then: (i) the delayed Party shall promptly provide written notice to the other party of such Force Majeure event to the other Parties; and (ii) the delayed Party's performance of such act shall be excused for the period of the delay; and (iii) the period for the performance of any such act shall be extended for a period equal to the period of such delay.

L. **Damages.** IN NO EVENT SHALL EITHER PARTY BE LIABLE FOR ANY SPECIAL, INDIRECT, INCIDENTAL, PUNITIVE, OR CONSEQUENTIAL DAMAGES OF ANY KIND, INCLUDING, BUT NOT LIMITED TO, LOSS OF PROFITS, PAYMENT OF LIQUIDATED DAMAGES, OR OTHER NONPERFORMANCE PENALTY, HOWEVER CAUSED AND PURSUANT TO ANY THEORY OF LIABILITY, WHETHER IN AN ACTION FOR CONTRACT, STRICT LIABILITY OR TORT, OR OTHERWISE, REGARDLESS OF WHETHER THE PARTIES HAVE BEEN ADVISED OF THE POSSIBILITY OF SUCH DAMAGE, AND NOTWITHSTANDING THE FAILURE OF THE ESSENTIAL PURPOSE OF ANY REMEDY. **THIS SECTION SHALL NOT BE CONSTRUED OR INTERPRETED AS A WAIVER OF GOVERNMENTAL IMMUNITY.**

XI.
Miscellaneous

A. Certification Regarding Undocumented Workers: Company certifies that it and its Affiliates do not and will not knowingly employ an Undocumented Worker, as defined below, during the term of this Agreement. "Undocumented Worker" shall mean an individual who, at any time during employment, is not: (i) lawfully admitted for permanent residence to the United States; or (ii) otherwise authorized under applicable law to be employed on any basis or under any program in the United States. Company shall immediately notify MDC if (i) Company becomes aware of it or its Affiliate employs or has employed an Undocumented Worker, (ii) Company becomes aware or receives notice that it or its Affiliated is alleged to have employed an Undocumented Worker, or (iii) Company or its Affiliate is convicted of a violation as referenced in the following paragraph.

If during the term of this Agreement, Company or any of its Affiliates knowingly employ any Undocumented Worker and is convicted of a violation under 8 U.S.C. § 1324a(f), Company shall forfeit its claim to any incentives owed to it by MDC under this Agreement or the Long-Term Hangar Sublease, and MDC shall be fully and completely discharged from all obligations due hereunder.

B. Severability. If any provision of this Agreement is held invalid or otherwise unenforceable by any court of competent jurisdiction, the remaining provisions of the Agreement will remain in full force and effect. Any provision of this Agreement held invalid or otherwise unenforceable only in part or degree will remain in full force and effect to the extent not held invalid or unenforceable.

C. Notices. All notices permitted or required hereunder shall be in writing, signed by the party giving such notice and delivered either (i) personally; (ii) by certified mail, return receipt requested, postage prepaid addressed to the party at the address listed below; (iii) delivered by a nationally recognized courier service; or (iv) via email or fax, provided that concurrent notice is delivered by any other approved method of delivery outlined in subsections (i) through (iii) above. Notices under this paragraph will be deemed effective if sent to the party or person identified below:

If to MDC:

Midland Development Corp.
Attn: MDC Chairman
Attn: Executive Director
200 N. Loraine St., Suite 610
Midland, Texas 79701

If to Company:

Starfighters Space Texas, Incorporated
Attn: Rick Svetkoff
1608 N. Jasmine Avenue
Tarpon Springs, Florida 34689

With Copy To:

City Attorney's Office
City Hall
300 Loraine St., Suite 320
Midland, Texas 79701

D. Paragraph Headings. The paragraph headings inserted in this Agreement are for convenience only and in no way define, limit or otherwise describe the scope or intent of this Agreement or any provisions hereof, or in any way affect the interpretation of this Agreement.

E. Binding Effect. This Agreement shall inure to the benefit of, and shall be legally binding upon, the parties hereto and their respective heirs, successors, assigns and legal representatives.

F. Findings Incorporated. The recitals are hereby incorporated into the body of this Agreement for all rights and purposes, and shall be considered part of the mutual covenants, consideration and promises that bind the parties in the same manner as the material terms and provisions hereof.

G. Waiver of Attorney Fees. BY EXECUTING THIS AGREEMENT, COMPANY AGREES TO WAIVE AND DOES HEREBY WAIVE ANY CLAIM IT HAS OR MAY HAVE IN THE FUTURE AGAINST MDC REGARDING THE AWARD OF ATTORNEY FEES THAT IS IN ANY WAY RELATED TO THIS AGREEMENT, OR THE CONSTRUCTION, INTERPRETATION OR BREACH OF THIS AGREEMENT. COMPANY AGREES THAT IF COMPANY BRINGS OR COMMENCES ANY LEGAL ACTION OR PROCEEDING RELATED TO THIS AGREEMENT, THE CONSTRUCTION, INTERPRETATION, VALIDITY OR BREACH OF THIS AGREEMENT, INCLUDING BUT NOT LIMITED TO ANY

ACTION PURSUANT TO THE PROVISIONS OF THE TEXAS UNIFORM DECLARATORY JUDGMENTS ACT (TEXAS CIVIL PRACTICE AND REMEDIES CODE SECTION 37.001, ET SEQ., AS AMENDED), THAT COMPANY AGREES TO WAIVE AND RELINQUISH ANY AND ALL RIGHTS TO THE RECOVERY OF ATTORNEY FEES TO WHICH IT MIGHT OTHERWISE BE ENTITLED.

COMPANY AGREES THIS IS THE VOLUNTARY AND INTENTIONAL RELINQUISHMENT AND ABANDONMENT OF A PRESENTLY EXISTING KNOWN RIGHT. THIS SECTION SHALL NOT BE CONSTRUED OR INTERPRETED AS A WAIVER OF GOVERNMENTAL IMMUNITY.

COMPANY IS RELYING ON ITS OWN JUDGMENT. COMPANY ACKNOWLEDGES THAT COMPANY HAD THE OPPORTUNITY TO DISCUSS THIS AGREEMENT WITH LEGAL COUNSEL PRIOR TO ITS EXECUTION. THE WAIVER CONTAINED IN THIS SECTION SHALL SURVIVE THE TERMINATION OF THIS AGREEMENT.

H. Amendment. This Agreement may only be amended by written instrument executed by both parties expressly stating the intention to amend this Agreement. No amendment shall be effective unless approved by a resolution duly passed by the MDC Board of Directors and the Midland City Council.

I. Release. COMPANY HEREBY RELEASES, ACQUITS, RELINQUISHES AND FOREVER DISCHARGES MDC, MDC'S BOARD MEMBERS, ATTORNEYS, EMPLOYEES, AND OFFICERS, FROM ANY AND ALL DEMANDS CLAIMS, DAMAGES, OR CAUSES OF ACTION OF ANY KIND WHATSOEVER THAT COMPANY HAS OR MIGHT HAVE IN THE FUTURE, INCLUDING, BUT NOT LIMITED TO, BREACH OF CONTRACT, QUANTUM MERUIT, CLAIMS UNDER THE DUE PROCESS AND TAKINGS CLAUSES OF THE TEXAS AND UNITED STATES CONSTITUTIONS, TORT CLAIMS, MDC'S NEGLIGENCE, OR RELATING TO ANY FAA RULE OR REGULATION AND THE ENFORCEMENT OF THE SAME. THE RELEASE CONTAINED IN THIS SECTION SHALL SURVIVE THE TERMINATION OF THIS AGREEMENT.

J. Consideration. MDC and Company hereby agree and acknowledge that this Agreement is supported by good and valuable consideration, the receipt and sufficiency of which is hereby acknowledged by the parties.

K. Governmental Immunity. By executing this Agreement, MDC is not waiving its right of governmental immunity. MDC is not granting consent to be sued by legislative resolution or action. **THERE IS NO WAIVER OF GOVERNMENTAL IMMUNITY**.

L. Governmental Function. MDC AND COMPANY HEREBY ACKNOWLEDGE AND AGREE THAT THE ENTIRETY OF MDC'S PERFORMANCE UNDER THIS AGREEMENT CONSTITUTES A GOVERNMENTAL FUNCTION. BY

ENTERING INTO THIS AGREEMENT, COMPANY RELEASES MDC FROM ANY PRESENT OR FUTURE CLAIM ASSERTING MDC'S PERFORMANCE UNDER THIS AGREEMENT IS NOT A GOVERNMENTAL FUNCTION. MDC AND COMPANY ACKNOWLEDGE AND AGREE THAT THIS AGREEMENT IS IN THE PUBLIC INTEREST AND SERVES A PUBLIC PURPOSE OF THE STATE OF TEXAS AND CITY OF MIDLAND IN PROMOTING THE WELFARE OF THE GENERAL PUBLIC ECONOMICALLY BY SECURING AND RETAINING BUSINESS ENTERPRISES AND AS A RESULT OF MAINTAINING A HIGHER LEVEL OF EMPLOYMENT, ECONOMIC ACTIVITY, AND STABILITY. COMPANY'S OBLIGATIONS CONTAINED IN THIS SECTION SHALL SURVIVE THE TERMINATION OF THIS AGREEMENT.

M. **No Disparity of Bargaining Position.** MDC and Company agree that there was no disparity of bargaining power between the parties in the negotiation and execution of this Agreement. MDC and Company acknowledge and agree that they were represented by legal counsel. MDC and Company acknowledge and agree that they read and understood the entire Agreement prior to its execution. MDC and Company acknowledge and agree that there were numerous compromises and concessions made by the parties resulting in the agreed-upon terms of this Agreement.

N. **Notice of Alleged Breach; Statutory Prerequisites.** As a condition precedent to filing suit for alleged damages incurred by an alleged breach of an express or implied provision of this Agreement, Company or its legal representatives shall give the MDC Chairman notice in writing (consisting of one (1) original and two (2) copies of the notice attached to a copy of this Agreement) of such damages, duly verified, within one hundred twenty (120) days after the same has been sustained. The discovery rule does not apply to the giving of this notice. The notice shall include when, where and how the damages occurred, the apparent extent thereof, the amount of damages sustained, the amount for which Company will settle, the physical and mailing addresses of Company at the time and date the claim was presented and the physical and mailing addresses of Company for the six (6) months immediately preceding the occurrence of such damages, and the names and addresses of the witnesses upon whom Company relies to establish its claims. Failure to so notify the MDC Chairman within the time and manner provided herein shall exonerate, excuse and except MDC from any liability whatsoever. MDC is under no obligation to provide notice to Company that Company's notice is insufficient. MDC reserves the right to request reasonable additional information regarding the claim. Said additional information shall be supplied within thirty (30) days after receipt of notice.

The statutory prerequisites outlined herein constitute jurisdictional requirements pursuant to Texas law. Notwithstanding any other provision, Company's failure to comply with the requirements herein shall perpetually bar Company's claim for damages regardless of whether MDC has actual or constructive notice or knowledge of said claim or alleged damages. Company agrees that the requirements of this Section are reasonable. The obligations contained in this Section shall survive the termination of this Agreement.

O. Approval Required. This Agreement shall not become effective until approved by a resolution of the Midland City Council.

THERE ARE NO UNWRITTEN ORAL AGREEMENTS BETWEEN THE PARTIES. TIME IS OF THE ESSENCE WITH REGARDS TO ALL DEADLINES IN THIS AGREEMENT.

REMAINDER OF THIS PAGE INTENTIONALLY LEFT BLANK
SIGNATURE PAGES TO FOLLOW

IN WITNESS WHEREOF, MDC and Company have executed this Agreement as of the Effective Date.

MIDLAND DEVELOPMENT CORPORATION
A Texas non-profit corporation,

_____
P. Lourcey Sams, Chairman

ATTEST:

_____
Jill Pennington, Secretary

STARFIGHTERS SPACE TEXAS, INCORPORATED,
A Texas corporation.

By: _____

Name: _____

Title: _____

THE STATE OF _____ §
§
COUNTY OF _____ §

BEFORE ME, _____, a notary public, on this day personally appeared _____, _____of STARFIGHTERS SPACE TEXAS, INCORPORATED, a Texas corporation, known to me to be the person whose name is subscribed to the foregoing instrument, and acknowledged to me that he executed the same as the act and deed of said organization for the purposes and consideration therein expressed and in the capacity therein stated.

GIVEN UNDER MY HAND AND SEAL OF OFFICE THIS _____ day of _____, A.D., 2024.

_____
Notary Public, in and for
the State of _____

For the purposes of MDC Agreement with Starfighters International and Starfighters Space Texas please find the following assets as being physically on property at MDC located at KMAF, Midland Texas at the time of this writing and / or promised in good faith as agreed upon.

- TF-104 Starfighter N991SF Forecast to arrive on site KMAF 23 September 2024
- F-104 Starfighter N104RN On site KMAF
- F-104 Starfighter N104RD Forecast to arrive on site KMAF Quarter 1, 2025
- 2 X F-4 Phantom II Forecast to arrive on site KMAF Quarter 1, 2025
- DC-9 Zero G Test Bed Forecast to arrive on site KMAF Quarter 1, 2025
- 2 x General Electric J-79-11 Engines on site KMAF
- 1 x Engine Stand On Site KMAF



Figure 1 Our HQ's are located on 15,000ft long historic runway 15 at NASA's Kennedy Space Center.

Starfighters International operates one of the world's only fleet of flight-ready supersonic jets for air-launch flight tests of hypersonic vehicles and other services. Operating under authorization from the Federal Aviation Administration, at the time of contract award our operations will make 19 aircraft available to government and commercial customers. Our AT high speed launch platforms are the MACH 2.0+ F-104 and F-4 aircraft. These launch vehicles are maintained by a flight crew that includes aeronautic and aerospace professionals, FAA certified technicians, mechanics, engineers and pilots providing support for government and commercial customers.

Our AT and ST platforms are enabled by a broad relationship with Kennedy Space Center providing our customers access to 30 labs for destructive and non-destructive testing all secured within a federal facility. Starfighters is a prime example of how incorporating commercial providers into MACH-TB 2.0 will allow DoD to efficiently and affordably achieve their desired testing cadence.



Figure 1 The F-4 has supported rocket testing since the 1960's when first used in support of the Titan program. The F-4 Phantom II is a tandem two-seat, twin-engine, all-weather, long-range supersonic jet interceptor with a top speed of over Mach 2.2. It can carry more than 18,000 pounds (8,400 kg) of payload on nine external hardpoints.



Figure 2 F-104 -Designed by Lockheed, the F-104 was operated by the U.S. Air Force, NASA, and foreign air forces until 2005. The F-104 operates at speeds excess of Mach 2+ and altitudes 100,000+ feet. Starfighters' fleet features latest production F-104 jets, obtained from Italian Air Force—fully certified/permitted by the FAA.

Starfighters International F-104 and F-4 aircraft represent the only standing commercial capability to offer supersonic jets for air-launch flight tests of hypersonic vehicles and other services. Our HQ is located near the 15,000ft long historic Runway 15 at NASA's Kennedy Space Center. Operating under authorization from the Federal Aviation Administration, at the time of contract award our operations will make 19 aircraft available to government and commercial customers. Our high-speed launch platforms are the MACH 2.0+ F-104 and F-4 aircraft. These launch platforms are enabled by a broad relationship with Kennedy Space Center providing our customers access to 30 labs for destructive and non-destructive testing, all located within a secured federal facility. Starfighters International is a prime example of how incorporating commercial providers into MACH-TB 2.0 will allow DoD to efficiently and affordably achieve their desired testing cadence.

Starfighters International: Capabilities

- Captive carry payload testing
- Windstream testing for supersonic or launch conditions
- Payloads for high altitude and hypersonic testing
- Termination flight system testing
- Space flight qualification
- Suborbital spaceflight simulation
- Supersonic and hypersonic research
- Hardware testing

Our Platforms: The F-104 was designed in the 1950s by Lockheed. It was a 'right stuff' jet operated by the U.S. Air Force, NASA, and more than a dozen foreign air forces. It was officially retired from government service in 2005 by the Italian Air Force. The F-104 can operate at speeds in excess of Mach 2 and holds the current altitude record of 103,674 feet. Its brute-force flight capabilities made the F-104 a go-to aircraft for NASA astronaut training in the 1960s and earned the nickname a '*missile with a man in it*'. Starfighters' fleet features some of the latest production F-104 aircraft obtained from the Italian Air Force along with an inventory of spare parts and support equipment. Our fleet includes both one and two-seat versions fully certified/permitted by the FAA. The Italian-made F-104S, the most capable model, can achieve sustained speeds of MACH 2.2 in both level and climbing flight profiles and altitudes in excess of 100,000 feet.

Cost for Starfighters to Move Assets to Midland Texas - Phase 2

Category	Cost	Note
Take apart and reassemble F-104 (Aircraft 2)	$50,000	1,000 MH at $50 = $50,000
Cranes Florida (for F-104 and 10 engines)	$20,000	Well planned to reduce costs - and for first set of engines
Cranes Texas (for F-104 and 10 engines)	$20,000	Well planned to reduce costs - and for first set of engines
Trucking to Texas (for F-104)	$25,000	
Trucking for Engines (first set of 10)	$70,000	At $14,000 (2 engines per truck) 5 trucks required
Trucking for Engines (second set of 8)	$56,000	At $14,000 (2 engines per truck) 4 trucks required
Cranes Florida (for 8 engines)	$20,000	
Cranes Texas (8 engines)	$20,000	
747 move from London to Midland	$250,000	
Platform 2 flying to Texas from Kennedy Space Center*	$1,160,000	8 Platforms 2s at a cost of $145,000 each*
To accomplish moving the above listed equipment to Midland the crew will need to be in Midland for a minimum of six week spread over five months.		
Crew Per Diem	$21,960	At IRS rate of $183 for MD TX
Hotel	$28,800	
Airfare	$22,800	
Total	$1,764,560	

* Moving 8 Platform 2s will be done by flying them into Midland. Because of the aircraft will have to land and overnight at Stennis International Airport in Mississippi along with the crew means this will be a major event. The jets will be flow in 2 sets of 3 and one stet of 2. The cost for the crew are included in this cost.

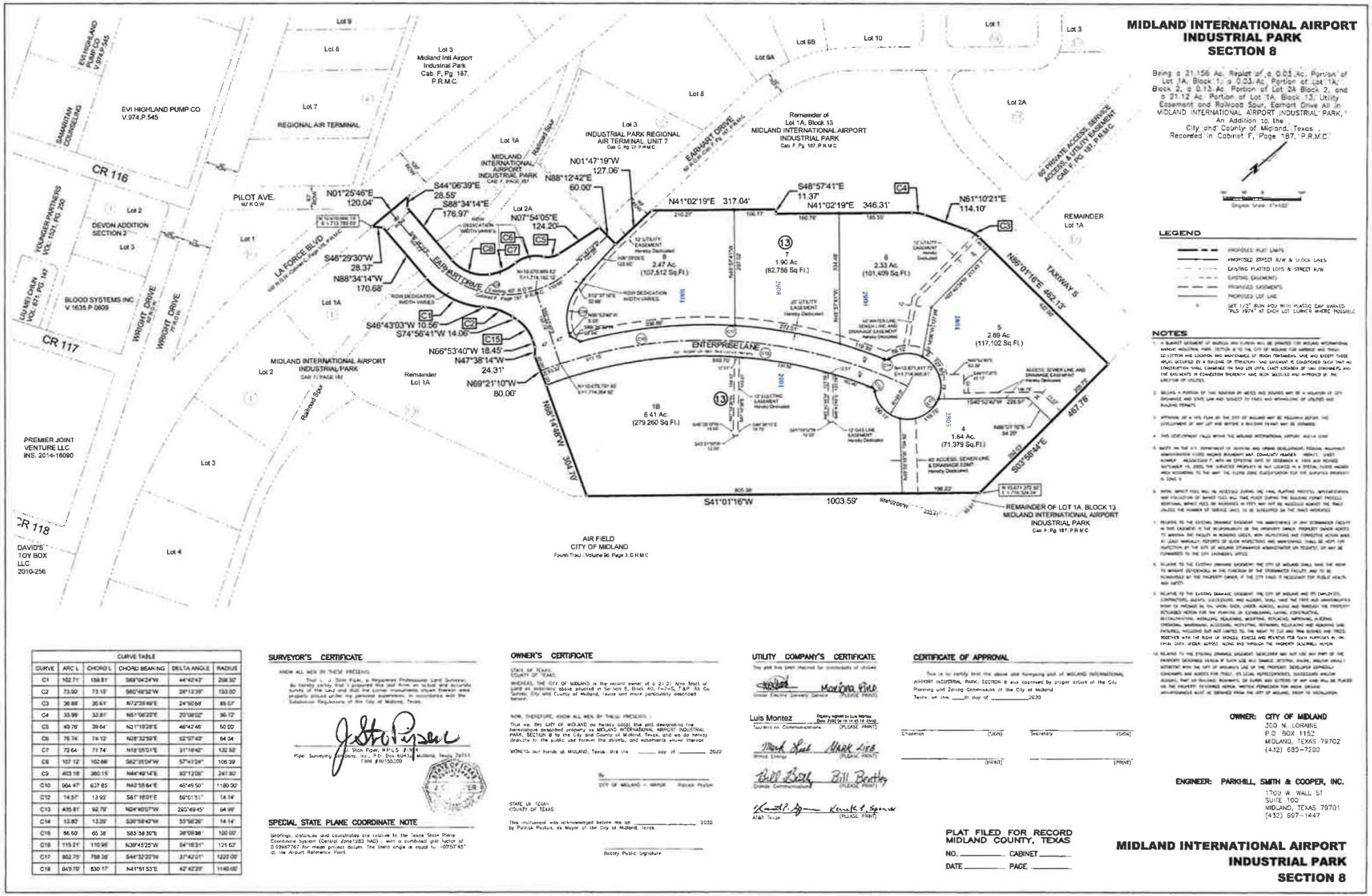

CURVE TABLE					
CURVE	ARC L	CHORD L	CHORD BEARING	DELTA ANGLE	RADIUS
C1	102.71'	100.81'	S69°04'24"W	44°42'43"	208.50'
C2	73.00'	72.15'	S60°49'52"W	24°13'39"	153.00'
C3	36.88'	36.61'	N72°28'49"E	24°36'58"	85.57'
C4	33.99'	33.81'	N51°06'23"E	23°08'52"	96.72'
C5	49.76'	39.64'	N21°13'28"E	46°42'45"	50.00'
C6	79.74'	74.12'	N26°32'59"E	52°07'40"	84.34'
C7	72.64'	71.74'	N18°05'01"E	31°16'42"	132.92'
C8	107.12'	102.66'	S62°35'04"W	57°41'24"	106.39'
C9	403.18'	380.15'	N44°49'14"E	93°12'06"	247.80'
C10	964.47'	937.85'	N43°35'54"E	46°49'50"	1180.00'
C12	14.57'	13.93'	S61°16'31"E	56°01'51"	14.14'
C13	435.81'	92.79'	N24°40'07"W	293°49'45"	84.99'
C14	13.80'	13.29'	S35°58'42"W	55°56'26"	14.14'
C15	86.50'	65.38'	S85°58'30"E	39°08'38"	100.00'
C16	115.21'	110.95'	N39°45'25"W	54°16'31"	121.62'
C17	802.75'	758.35'	S44°32'20"W	37°42'01"	1220.00'
C18	849.79'	830.17'	N41°51'53"E	42°42'28"	1140.00'

SURVEYOR'S CERTIFICATE

KNOW ALL MEN BY THESE PRESENTS:

That I, J. Stan Piper, a Registered Professional Land Surveyor, do hereby certify that I prepared this plat from an actual and accurate survey of the land and that the corner monuments shown thereon were properly placed under my personal supervision, in accordance with the Subdivision Regulations of the City of Midland, Texas.

J. Stan Piper, RPLS # 1974
Piper Surveying Company, Inc., P.O. Box 60434, Midland, Texas 79711
FIRM #10150200

SPECIAL STATE PLANE COORDINATE NOTE

Bearings, distances and coordinates are relative to the Texas State Plane Coordinate System (Central Zone/1983 NAD), with a combined grid factor of 0.99987767 for mean project datum. The basis angle is equal to -00°53'45" at the Airport Reference Point.

OWNER'S CERTIFICATE

STATE OF TEXAS
COUNTY OF TEXAS

WHEREAS, THE CITY OF MIDLAND is the record owner of a 21.21 Acre Tract of Land as evidenced above situated in Section 8, Block 40, T-7-S, T&P. RR Co Survey, City and County of Midland, Texas and more particularly described hereon.

NOW, THEREFORE, KNOW ALL MEN BY THESE PRESENTS:

That we, the CITY OF MIDLAND do hereby adopt the plat designating the hereinabove described property as MIDLAND INTERNATIONAL AIRPORT INDUSTRIAL PARK, SECTION 8 to the City and County of Midland, Texas, and we do hereby dedicate to the public use forever the streets, and easements shown thereon.

WITNESS our hands at MIDLAND, Texas, this the _____ day of _____ 2020

By: _____
CITY OF MIDLAND – MAYOR Patrick Payton

STATE OF TEXAS
COUNTY OF TEXAS

This instrument was acknowledged before me on _____ 2020 by Patrick Payton, as Mayor of the City of Midland, Texas.

_____
Notary Public Signature

UTILITY COMPANY'S CERTIFICATE

The plat this been reviewed for conformity of utilities.

Xcel Energy — Marlena Fine (PLEASE PRINT)

Luis Montez — Duly signed by Luis Montez Date 2020.06.18 14:45:19 -05'00' — Southwest Communications (PLEASE PRINT)

Mark Lieb — Mark Lieb (PLEASE PRINT)

Bill Beatty — Bill Beatty (PLEASE PRINT)

Kenneth P. Spencer — Kenneth P. Spencer (PLEASE PRINT)

CERTIFICATE OF APPROVAL

This is to certify that the above and foregoing plat of MIDLAND INTERNATIONAL AIRPORT INDUSTRIAL PARK, SECTION 8 was approved by proper action of the City Planning and Zoning Commission of the City of Midland

Texas on this ____th day of _____2020

Chairman (SIGN) _____ Secretary (SIGN) _____

(PRINT) _____ (PRINT) _____

City Council Meeting

Item Number: 17

Meeting Date: September 24, 2024

To: City Council / City Manager

From: Sara Harris,

Subject: MOTION APPROVING A CONTRACTOR AGREEMENT BETWEEN THE MIDLAND DEVELOPMENT CORPORATION AND KBR, INC., IN THE AMOUNT OF $15,000.00 FOR SERVICES RELATED TO COMMERCIAL SPACEPORT DEVELOPMENT (DISTRICT: NONE) (CITY MANAGER) (STRONG ECONOMY WITH MORE QUALITY JOBS)

Purpose:

The Board of Directors of the Midland Development Corporation approved at a regular meeting on September 9, 2024 a resolution authorizing the execution of a contractor agreement with KBR, Inc. in the amount of $15,000.00 for services related to commercial spaceport development; and authorizing payment therefor.

Recommended City Council Action:

Approve

Fiscal Impact:

$15,000.00

Strategic Priority:

(Strong Economy with More Quality Jobs)

Discussion:

KBR will produce a white paper on the feasibility of a vertical launch location on land west of Midland.

Morris Williams Jr.

City Manager's Office

City Council Meeting

Item Number: 18

Meeting Date: September 24, 2024

To: City Council / City Manager

From: Sara Harris,

Subject: **MOTION APPROVING A PURCHASE AND SALE AGREEMENT BETWEEN THE MIDLAND DEVELOPMENT CORPORATION AND HENDERCO, LLC, FOR THE MIDLAND DEVELOPMENT CORPORATION'S PURCHASE OF CERTAIN REAL PROPERTY DESCRIBED AS A 6.484-ACRE TRACT OUT OF BLOCK 1, LOT 2, PARKWAY SOUTH ADDITION, SECTION 3, CITY OF MIDLAND, MIDLAND COUNTY, TEXAS (DISTRICT 2) (CITY MANAGER) (STRONG ECONOMY WITH MORE QUALITY JOBS)**

Purpose:

The Board of Directors of the Midland Development Corporation approved at a regular meeting on September 9, 2024 a resolution authorizing execution of a purchase and sale agreement between the Midland Development Corporation and Henderco, LLC for the purchase of certain real property described as 6.484 acres out of Block 1, Lot 2, Parkway South Addition, Section 3, City of Midland, Midland County, Texas.

Recommended City Council Action:

Approve

Fiscal Impact:

$1,600,000.00

Strategic Priority:

(Strong Economy with More Quality Jobs)

Discussion:

This motion authorizes the purchase of 6.484 acres of undeveloped land at 2200 South Lamesa Road in Midland. The MDC board has identified this land as a catalyst for economic development and business support in southeast Midland.

Morris Williams Jr.

City Manager's Office

City Council Meeting

Item Number: 19

Meeting Date: September 24, 2024

To: City Council / City Manager

From: Daniel Humbert, Senior Planner

Subject: MOTION APPROVING, WITH STAFF'S RECOMMENDED CONDITIONS, A PRELIMINARY PLAT OF MOCKINGBIRD RIDGE, BEING A PLAT OF A 302.39-ACRE TRACT OF LAND OUT OF SECTION 18, BLOCK 38, T-1-S, T&P RR CO. SURVEY, CITY AND COUNTY OF MIDLAND, TEXAS (GENERALLY LOCATED SOUTHEAST OF THE INTERSECTION OF FAIRGROUNDS ROAD AND ARAPAHOE ROAD) (QUALITY OF LIFE AND PLACE)

Purpose:

Maverick Engineering, on behalf of Betenbough Homes, LLC, is requesting to plat a 302.39-acre tract of land situated in Section 18, Block 38, T-1-S, A-734, T&P RR. Co. Survey, City and County of Midland, Texas located east of Fairgrounds Road. The applicant is platting to allow for Housing Development to allow for the development of multi-use site including single family housing, cottage housing, and greenspace/detention.

Current Zoning:

LR, Local Retail District, in part, TH, Townhouse (Attached) Dwelling District, in part, MF-16, Multiple-Family Dwelling District, in part, SF-3, Single-Family Dwelling District, in part, SF-2, Single-Family Dwelling District, in part, SF-1, Single-Family Dwelling District, in part, 2F, Two-Family Dwelling (Duplex) District, in part.

This request has been routed to all respective departments for internal review. The comments are below.

Recommended City Council Action:

Approve

Fiscal Impact:

None.

Discussion:

BUILDING CODE: (Approved)

No issues. All future structures must adhere to the 2018 International Building Codes, the 2015 International Energy Code, the 2023 NEC requirements, the 2015 International Fire Codes, local city ordinances, zoning requirements, established setbacks, oil and gas considerations, and floodplain requirements if necessary. Code versions are subject to change depending on the time of new code editions adopted in the City of Midland and date of permit application. Also, please refer to the comments made by the Oil and Gas division regarding any issues related to wells and tanks.

SURVEYOR: (Received)

No comments provided.

ENGINEERING: (Approved with Conditions)

IMPACT FEES: Okay as shown. [For Applicant’s Information Only.]

ROW: Refer to transportation's comments. [For Applicant’s Information Only.]

PAVING: Internal paving improvements have not been submitted/accepted. Construct roads shown to City Standards for entire platted frontage. Per City code, the developer is required for 1/3 the cost/construction of Fairgrounds, based on maximum 20-meters (68-foot) width including C & G arterial construction standards.
[Reference City Code Section 11-2-3(G)1 & 11-2-4(A)2(a)]

WATER: Water improvements have not been submitted/accepted. Construct to City standards along entire platted frontage, serving all lots with looped system. [Reference City Code Section 11-2-3(G)1]

FIRE HYDRANTS: Required as needed to meet NFPA, IFC & City Fire Code; and/or comply with directives of City Fire Marshal. After January 14, 2020 - Fire hydrants shall be spaced no more than 500' apart, Pressure Indicator Rings are to be installed and will require the developers/contractors to pay for the flow test. [For Applicant’s Information Only.]

PRO RATA: None. [For Applicant’s Information Only.]

SEWER: Sewer improvements have not been submitted/accepted. Construct to City standards along entire platted frontage, serving all lots within the subdivision and to adjacent lot lines along exterior roadways. [Reference City Code Section 11-2-3(G)1]

DRAINAGE: Show compliance with Mockingbird Ridge Phase 15-26 Drainage Study, prepared by Maverick Engineering and approved by City on 08/09/2024. [Reference City Code Sect. 11-2-3(D)8]

EASEMENTS: Show existing and proposed. [For Applicant's Information Only.]

SIDEWALKS: Required with building permit. [For Applicant's Information Only.]

TRANSPORTATION: (Approved)

STREET NAME AND TRAFFIC CONTROL SIGN FEE – $500/intersection sign fees due at the final plat. Fee shall be adjusted based on the number of intersections if Final Plat is phased. [Reference City Code Section 11-2-5(C)3(t).] No additions or changes to site access are approved with plat or zoning review. Driveways or other access points are approved only with construction drawing review. [For the Applicant's information only.]

FIRE: (Approved)

All future development shall meet the requirements of IFC 2015 ed. and local ordinances.

OIL AND GAS: (Approved with Conditions)

Both tank batteries identified on the plat need the radius changed from 500' to 150'. The Stimson Burley B #1 identified was permitted with a City Permitted 1-11-94, Case No. 0-93-001 and is identified with the 500 ft. permitted well radius and the 135 ft. min radius on the plat. Note the requirement of building permits variance for this well in the notes on plat. Residential/commercial building permits inside the 500 ft. radius will require a variance to the permitted well from the City Council. The variance request would need to be made through the Building Official- Jeff Pinkstaff. Non-Permitted wells identified with 135 ft. well radius of location on plat. Please note if oil & gas wells are not identified or left off plat, this could prevent receiving city permits for structures. Any plugged and abandoned (P&A) well would need to be identified. No structure shall be built over an abandoned well.

GIS: (Approved)

Title should be Mockingbird Ridge North?

Northern call encroaches into existing plats. (Lone Star Trails II, Sec 16, Sec 13, Sec 8, Sec 6) Please check calls.

Phases will be reviewed as they are received, individually.

Please check chord length of C2, C12 in table.

Street names under review.

Block 33 should be a continuation of Block 32 and lots 1-23 of Block 33 should be 44-66. Block numbers greater than 33 should be reduced by 1. (34->33, 35-> 34, and so forth)

PLANNING: (Approved with Conditions)

The Planning and Zoning Commission recommended approval of this request on September 03, 2024.

The zone change request to change the property to PD, Planned Development District for Housing Development was approved by Council in its first reading on September 10, 2024. Its second reading is scheduled for September 24, 2024.

Provide proof of ownership by final plat submittal. [11-2-3(H)3(m)(1)]

Plat is over 25 acres and will therefore need to go City Council after the Planning and Zoning Commission at the preliminary phase. [11-2-3(D)11]

The preliminary plat can be named Mockingbird Ridge. But the next final plat must be named Mockingbird Ridge, Section 12. [Informational]

If the plat will be included in existing HOA for the Mockingbird subdivision to the south, then the restrictive covenants will need to updated with a new metes & bounds exhibit which includes the property that this plat covers. The amendment will need to be approved by the P&Z Commission. If a new restrictive covenants is being proposed, it will require approval from the Planning & Zoning Commission at the final plat phase. [11-2-3(H)3(l)]

Variances in lot dimensions will be determined by the request for the PD that is currently in process. All other lots must conform to the base zoning(s) established by the proposed PD should it be approved. [11-2-3(D)8(b)]

Staff recommends approval of the Preliminary Plat of Mockingbird Ridge, subject to conditions A through D.

Condition:

A. Proof of ownership must be provided at final plat submittal. [11-2-3(H)3(m)(1)]

B. Approval by the City Council shall be required prior to consideration of a final plat by the Commission on which any preliminary plat is ten hectares (25 acres) or more in area and is located in any survey section (approximately one square mile) which does not contain a publicly owned site or sites intended for both a public school and park, or public site reservation therefor; [11-2-3(D)11(a)(6)].

C. Approval of this preliminary plat is conditioned upon public improvements being completed prior to the approval of a final plat by the City or with an exception when waived or deferred by the Council. Midland City Code 11-2-3(G)1 & 11-2-4(A)2(a).

D. Approval of a zone change request to PD, Planned District for Housing Development must be approved before Final Plat submittal. [11-2-3(D)9]

Attachments:

Proposed Preliminary Plat
Application
Location Map
Zoning Map
Aerial Photo
PowerPoint Presentation

Morris William Sr.

City Manager's Office

PRELIMINAR
Y PLAT

MOCKINGBIRD RIDGE

BEING A 302.39 ACRE TRACT OF LAND, SITUATED IN SECTION 18, BLOCK 38, T-1-S, A-734, T&P RY. CO. SURVEY, CITY OF MIDLAND, MIDLAND COUNTY, TEXAS.

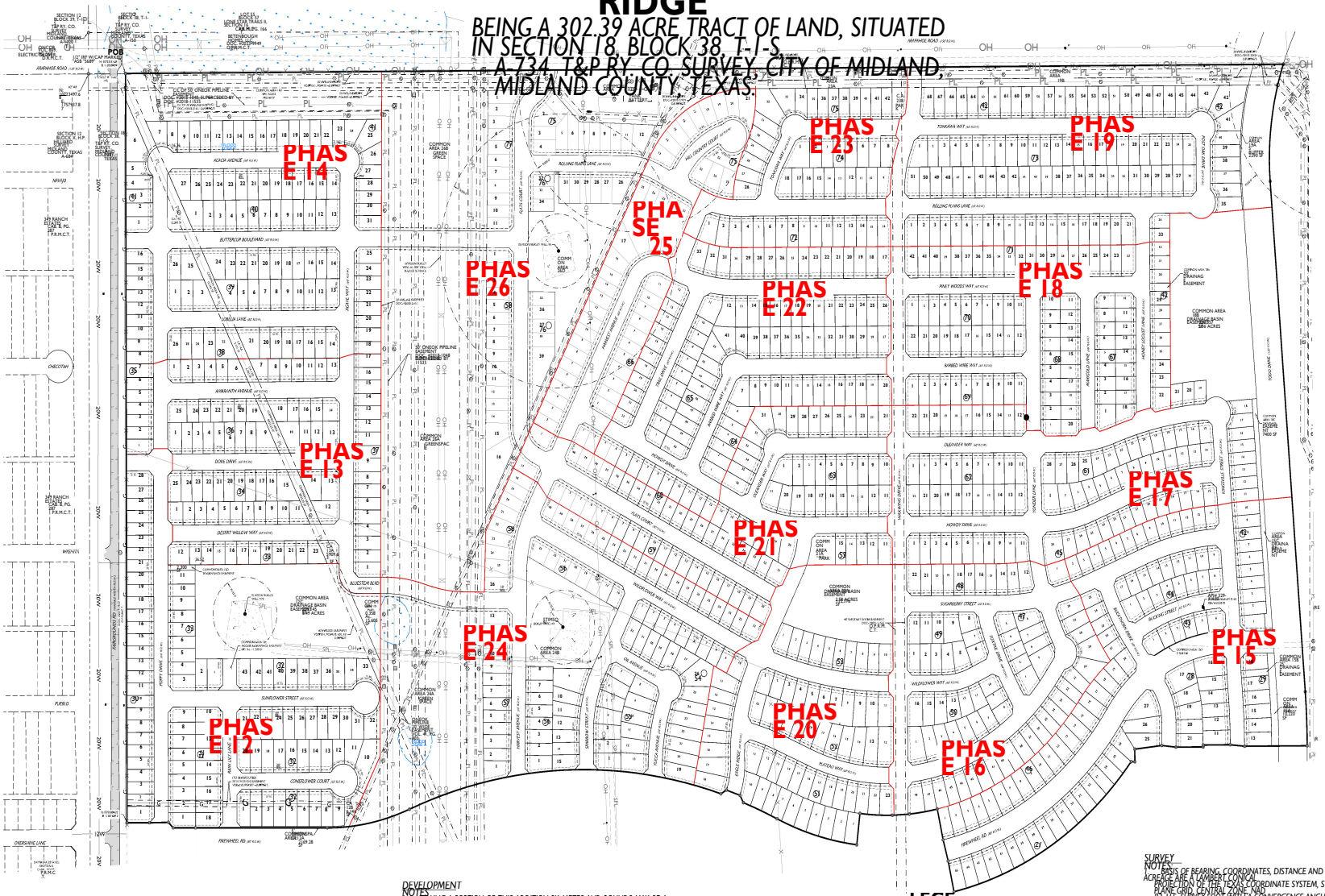

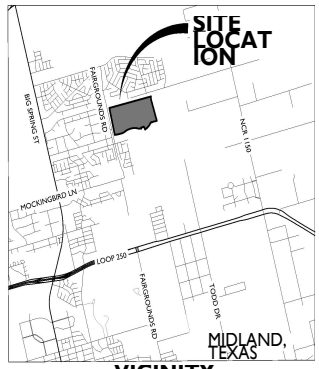

VICINITY MAP

SURVEYOR'S CERTIFICATE

KNOW ALL MEN BY THESE PRESENTS:

THAT I, GREGORY W. SHOULTS, A REGISTERED PROFESSIONAL LAND SURVEYOR OF THE STATE OF TEXAS, DO HEREBY CERTIFY THAT THIS PLAT WAS PREPARED FROM AN ACTUAL AND ACCURATE SURVEY OF THE LAND AND THAT THE CORNER MONUMENTS SHOWN THEREON WERE PROPERLY LOCATED UNDER MY PERSONAL SUPERVISION, IN ACCORDANCE WITH THE SUBDIVISION REGULATIONS OF THE CITY OF MIDLAND, TEXAS.

GREGORY W. SHOULTS
REGISTERED PROFESSIONAL LAND SURVEYOR
RPLS #5386
MAVERICK LAND SURVEYING / CIVIL ENGINEERING (TX FIRM #10194514)
909 W. WALL STREET, SUITE "K"
MIDLAND, TEXAS 79701

PRELIMINARY THIS DOCUMENT SHALL NOT BE RECORDED FOR ANY PURPOSE

OWNER'S CERTIFICATE

THE STATE OF TEXAS
COUNTY OF MIDLAND

BETENBOUGH HOMES LLC, IS THE RECORD OWNER OF A TRACT OF LAND SITUATED IN SECTION 18, BLOCK 38, T-1-S, T&P RY. CO. SURVEY, CITY AND COUNTY OF MIDLAND, TEXAS, AND KNOW ALL MEN BY THESE PRESENTS:

THAT BETENBOUGH HOMES LLC, BEING THE OWNER OF THE LAND SHOWN ON THIS PLAT DESIGNATED AS MOCKINGBIRD RIDGE, SECTION 4, AN ADDITION TO THE CITY OF MIDLAND, MIDLAND COUNTY, TEXAS, DO HEREBY DEDICATE TO THE PUBLIC USE FOREVER THE STREETS, ALLEYS AND EASEMENTS SHOWN THEREON; AND DO HEREBY GIVE AN EASEMENT OF INGRESS AND EGRESS TO THE CITY OF MIDLAND FOR GARBAGE COLLECTION, UTILITY MAINTENANCE, ACCESS AND MAINTENANCE OF DRAINAGE FACILITIES, TRASH CONTAINERS AND ALLEYS THEREIN, AND CONDITION SAID EASEMENTS FREE AND CLEAR OF ANY CONSTRUCTION THAT SHALL COMMENCE ON SAID LOT OR LOTS UNTIL THE EXACT LOCATION OF SAID EASEMENTS HAVE BEEN SELECTED AND APPROVED BY THE DIRECTOR OF UTILITIES.

BETENBOUGH HOMES, LLC

ACKNOWLEDGEMENT

THE STATE OF TEXAS
COUNTY OF MIDLAND

BEFORE ME, THE UNDERSIGNED AUTHORITY, A NOTARY PUBLIC IN AND FOR THE STATE OF TEXAS ON THIS DAY PERSONALLY APPEARED _____, KNOWN TO ME TO BE THE PERSON WHOSE NAME IS SUBSCRIBED TO THE FOREGOING INSTRUMENT AND ACKNOWLEDGED TO ME THAT HE WAS ACTING AS OWNER, AND THAT HE EXECUTED THE SAME AS THE ACT OF SAID _____ FOR THE PURPOSES AND CONSIDERATION THEREIN EXPRESSED, AND IN THE CAPACITY THEREIN STATED, GIVEN UNDER MY HAND AND SEAL OF OFFICE THIS _____ DAY OF _____, 2024.

NOTARY PUBLIC IN AND FOR THE STATE OF TEXAS

CERTIFICATE OF APPROVAL

THIS IS TO CERTIFY, THAT THE ABOVE AND FOREGOING PLAT OF MOCKINGBIRD RIDGE WAS APPROVED BY THE PROPER ACTION OF THE CITY PLANNING AND ZONING COMMISSION OF THE CITY OF MIDLAND, TEXAS ON THIS _____ DAY OF _____, 2024.

LUCY STONIEGA, CHAIRMAN

LANDON OCHOA, SECRETARY

DRAINAGE EASEMENT
DEDICATED WITH THIS PLAT

THE CITY OF MIDLAND AND ITS EMPLOYEES, CONTRACTORS, AGENTS, SUCCESSORS AND ASSIGNS, SHALL HAVE THE FREE AND UNINTERRUPTED RIGHT OF PASSAGE IN, ON, UPON, UNDER, ACROSS, ALONG AND THROUGH THE PROPERTY DESCRIBED HEREIN FOR THE PURPOSE OF ESTABLISHING, LAYING, CONSTRUCTING, RECONSTRUCTING, INSTALLING, REALIGNING, MODIFYING, REPLACING, IMPROVING, ALTERING, OPERATING, MAINTAINING, ACCESSING, INSPECTING, REMOVING AND ABANDONING IN THE PROPERTY, DRAINAGE FACILITIES AND APPURTENANCES, INCLUDING BUT NOT LIMITED TO, THE RIGHT TO ENTER AND REMAIN UPON SAID PROPERTY AND THEREBY WITH THE CITY MAY MAKE SUCH CUTS AND EXCAVATIONS AS IT MAY DEEM NECESSARY OR DESIRABLE FOR THE PURPOSES HEREIN EXPRESSED, AND AGREES FOR ITSELF, ITS HEIRS, SUCCESSORS AND ASSIGNS, THAT NO BUILDING, FENCING, TREES, SHRUBBERY OR OTHER IMPROVEMENTS OR OBSTRUCTIONS SHALL BE PLACED ON OR OVER THE PROPERTY.

2. THE CITY OF MIDLAND SHALL HAVE THE RIGHT TO MITIGATE DRAINAGE PROBLEMS AND ENHANCE DRAINAGE FACILITIES WITHIN THE DRAINAGE EASEMENT AS IT DEEMS NECESSARY, WITHOUT PERMISSION OF THE OWNER, PROVIDED THAT THE CITY SHALL RESTORE THE PROPERTY AS NEARLY AS PRACTICABLE TO ITS CONDITION PRIOR TO SUCH MITIGATION OR ENHANCEMENT. THE OWNER SHALL NOT BE REIMBURSED BY THE CITY FOR ANY LANDSCAPING, IRRIGATION OR FENCING DAMAGED OR REMOVED BY THE CITY.

3. THE OWNER SHALL BE RESPONSIBLE FOR THE MAINTENANCE AND OPERATION OF ALL DRAINAGE FACILITIES LOCATED WITHIN THE PROPERTY AND SHALL KEEP THE FACILITIES IN GOOD WORKING ORDER. THE OWNER AGREES TO MAINTAIN SUCH FACILITIES IN ACCORDANCE WITH INSPECTIONS AND CORRECTIVE ACTION MADE AT LEAST ANNUALLY. REPORTS OF SUCH INSPECTIONS AND MAINTENANCE SHALL BE KEPT FOR INSPECTION BY THE CITY OF MIDLAND STORMWATER ADMINISTRATOR OR REQUESTED OR MAY BE FORWARDED TO THE CITY ENGINEER'S OFFICE.

4. IN THE EVENT THE OWNER FAILS TO MAINTAIN THE DRAINAGE FACILITY IN THIS EASEMENT TO THE SATISFACTION OF THE CITY OF MIDLAND PRIOR TO THE EXPIRATION OF THE WARRANTY PERIOD, THE CITY SHALL PERFORM THE NECESSARY MAINTENANCE AND THE OWNER SHALL REIMBURSE THE CITY FOR ALL COSTS INCURRED WITHIN 30 DAYS OF RECEIPT OF AN INVOICE FROM THE CITY.

BACKSET

DEVELOPMENT NOTES

1. SELLING A PORTION OF THIS ADDITION BY METES AND BOUNDS MAY BE A VIOLATION OF CITY ORDINANCE AND STATE LAW AND SUBJECT TO FINES AND WITHHOLDING OF UTILITIES AND BUILDING.
2. PRIOR TO DEVELOPMENT A SITE PLAN BY THE CITY OF MIDLAND MAY BE REQUIRED BEFORE THE DEVELOPMENT OF ANY LOT AND BEFORE A BUILDING PERMIT MAY BE OBTAINED.
3. THE INSTALLATION OF IMPROVEMENTS MAY BE REQUIRED BY THE CITY OF MIDLAND PRIOR TO THE FINAL PLATTING PROCESS, WHICH WILL TAKE PLACE DURING THE BUILDING PERMIT PROCESS. ADDITIONAL IMPACT FEES OR INCREASES IN FEES MAY BE ASSESSED AT THE TIME OF FINAL PLATTING.
4. ALL EXISTING OIL AND GAS WELLS SHALL BE PLUGGED AND ABANDONED IN ACCORDANCE WITH RAILROAD COMMISSION REGULATIONS.
5. THE FINAL PLAT SHALL CONFORM TO THE ZONING REGULATIONS IN EFFECT AT THE TIME OF FINAL PLATTING.
6. THE MINIMUM BUILDING SETBACK LINES SHALL BE AS REQUIRED BY THE ZONING ORDINANCE IN EFFECT AT THE TIME OF FINAL PLATTING.
7. ALL RESIDENTIAL BUILDING PERMITS LOCATED INSIDE THE 500 FT. RADIUS WILL REQUIRE A VARIANCE TO THE PERMITTED WELL FROM THE CITY COUNCIL.

FEMA NOTE

FLOOD STATEMENT: ACCORDING TO FEMA'S N.F.I.P. FLOOD INSURANCE RATE MAP #48329C0110E DATED SEPTEMBER 26, 2008, PORTIONS OF THIS PROPERTY AS SHOWN HEREON ARE WITHIN THE UNSHADED PORTION OF ZONE "X" DESIGNATED AS "AREAS OF MINIMAL FLOOD HAZARD DETERMINED TO BE OUTSIDE THE 0.2% ANNUAL CHANCE FLOODPLAIN". THIS FLOOD STATEMENT DOES NOT IMPLY THAT THE PROPERTY AND/OR THE STRUCTURES THEREON WILL BE FREE FROM FLOODING OR FLOOD DAMAGE. PORTIONS OF THE PROPERTY SHOWN HEREON ARE WITHIN ZONE "AE" AREAS WITH BASE FLOOD ELEVATIONS AND FLOOD HAZARD FACTORS DETERMINED AND WILL OCCUR AND FLOOD HEIGHTS AND EXTENT MAY BE INCREASED BY MAN-MADE OR NATURAL CAUSES. ON RARE OCCASIONS GREATER FLOODS CAN AND WILL OCCUR AND FLOOD HEIGHTS MAY INCREASE BEYOND THAT SHOWN HEREON. THIS FLOOD STATEMENT IS BASED ON REGULATORY REQUIREMENTS FOR THE USE OF THE FLOOD INSURANCE RATE MAP AND IS BASED ON SCIENTIFIC AND ENGINEERING CONSIDERATIONS FOR THE SIZE OF A 30 YEAR HISTORICAL RECORD DETAILED AND ENGINEERING STUDIES HAVE BEEN MADE TO DETERMINE THE FLOOD HAZARD AREAS AND BASE FLOOD ELEVATIONS ARE SHOWN HEREON.

UTILITY COMPANY'S CERTIFICATE

THIS PLAT HAS BEEN CHECKED FOR ACCESSIBILITY OF UTILITIES.

ATMOS ENERGY
BY: _____

AT&T
BY: _____

ASTOUND BROADBAND
BY: _____

OPTIMUM
BY: _____

ONCOR ELECTRIC DELIVERY
BY: _____

LEGEND

- SET 1/2-INCH IRON ROD W/RED PLASTIC CAP MARKED "MAVERICK PROPERTY CORNER"
- FOUND BRICK, IRON ROD W/RED PLASTIC CAP MARKED "MAVERICK FIRM #10194514", UNLESS OTHERWISE NOTED
- EXISTING POWER POLE
- EXISTING GUY ANCHOR
- EXISTING UTILITY POLE
- EXISTING SIGN
- EXISTING STUB
- EXISTING CATHODIC TEST STATION
- EXISTING WATER WELL (PRODUCING)
- EXISTING PLUGGED WELL
- EXISTING WELL PAD
- FLOOD ELEVATION
- P.R.M.C.T. PLAT RECORDS, MIDLAND CO., TX
- O.P.R.M.C.T. OFFICIAL PUBLIC RECORDS, MIDLAND CO., TX
- D.R.M.C.T. DEED RECORDS, MIDLAND CO., TX

- BOUNDARY LINE
- PHASE LINE
- EXISTING ADJACENT PROPERTY LINES
- EXISTING DIRT ACCESS RD
- PROPOSED EASEMENT
- BUILDING SETBACK LINE (BSL)
- SECTION LINE
- EXISTING EDGE OF PAVEMENT
- EXISTING FENCE
- EXISTING OVERHEAD ELECTRIC LINE
- EXISTING BURIED PIPELINE
- EXISTING SURFACE PAVEMENT
- EXISTING STORM DRAIN
- EXISTING ATMOS GAS LINE
- EXISTING WATER LINE

SURVEY NOTES

1. BASIS OF BEARING, COORDINATES, DISTANCE AND ACREAGE ARE A LAMBERT CONFORMAL PROJECTION OF THE TEXAS COORDINATE SYSTEM, STATE PLANE CRS, CENTRAL ZONE, NAD 83, U.S. SURVEY FOOT WITH A CONVERGENCE ANGLE OF 0°00'00" AT THE POINT OF BEGINNING.
2. [illegible] SECTION 12 BLOCK 38 T-1-S T&P RY. CO. SURVEY AND SECTION 18 BLOCK 38 T-1-S T&P RY. CO. SURVEY, MIDLAND COUNTY, TEXAS, AS SHOWN HEREON WERE ESTABLISHED BY GPS OBSERVATIONS AND ARE REFERENCED TO THE SOUTHWEST CORNER OF SECTION 18 BLOCK 38 T-1-S T&P RY. CO. SURVEY.
3. A DIGITAL COPY OF THE ELECTRONIC DATA FILED IN THE OFFICE OF THE SURVEYOR IS REQUIRED FOR COMPLETE RECONSTRUCTION OF THIS SURVEY.
4. CONTRACTOR SHALL VERIFY UTILITIES AND PIPELINES, IF ANY, AS APPROVED BY THE DIRECTOR OF UTILITIES. OBSERVED EXISTING SIGNAGE, CITY OF MIDLAND GIS AND ONE-CALL 811 SITE MARKINGS AT THE TIME OF THIS SURVEY DUE CARE IS RECOMMENDED. CONTACT ONE-CALL 811 AT LEAST 48 HOURS PRIOR TO ANY EXCAVATION OR CONSTRUCTION.

PROPERTY OWNER

BETENBOUGH HOMES LLC
4350 85TH ST.
LUBBOCK, TX 79424
DEED INSTRUMENT #2021-3575 & #2023-2385
O.P.R.M.C.T.

PLAT FILED FOR RECORD IN MIDLAND COUNTY, TEXAS

_____ DATE

MAVERICK
CIVIL ENGINEERING / LAND SURVEYING
909 West Wall Street, Suite "K"
Midland, Texas 79701
ENGINEER FIRM #: F-15089
SURVEY FIRM #: 10194514
Tel: (432) 262-0999 Fax: (432) 262-0989
www.maverick-texas.com

September 24, 2024

MOCKINGBIRD RIDGE

SHEET 1 OF 6

Drawing: F:\2021\21012\2_BETENBOUGH-BRANDT\3_DWG\3_PLAT\1_MOCKINGBIRD\PRELIM PLAT - NORTH\21012 PR NORTH PRELIM PLAT.DWG, Last Saved By: ADevine, on 8/6/24

ORIGINAL SCALE: 1" = 200'

PRELIMINARY PLAT
MOCKINGBIRD RIDGE

BEING A 302.39 ACRE TRACT OF LAND, SITUATED IN SECTION 18, BLOCK 38, T-1-S, A-734, T&P RY. CO. SURVEY, CITY OF MIDLAND, MIDLAND COUNTY, TEXAS.

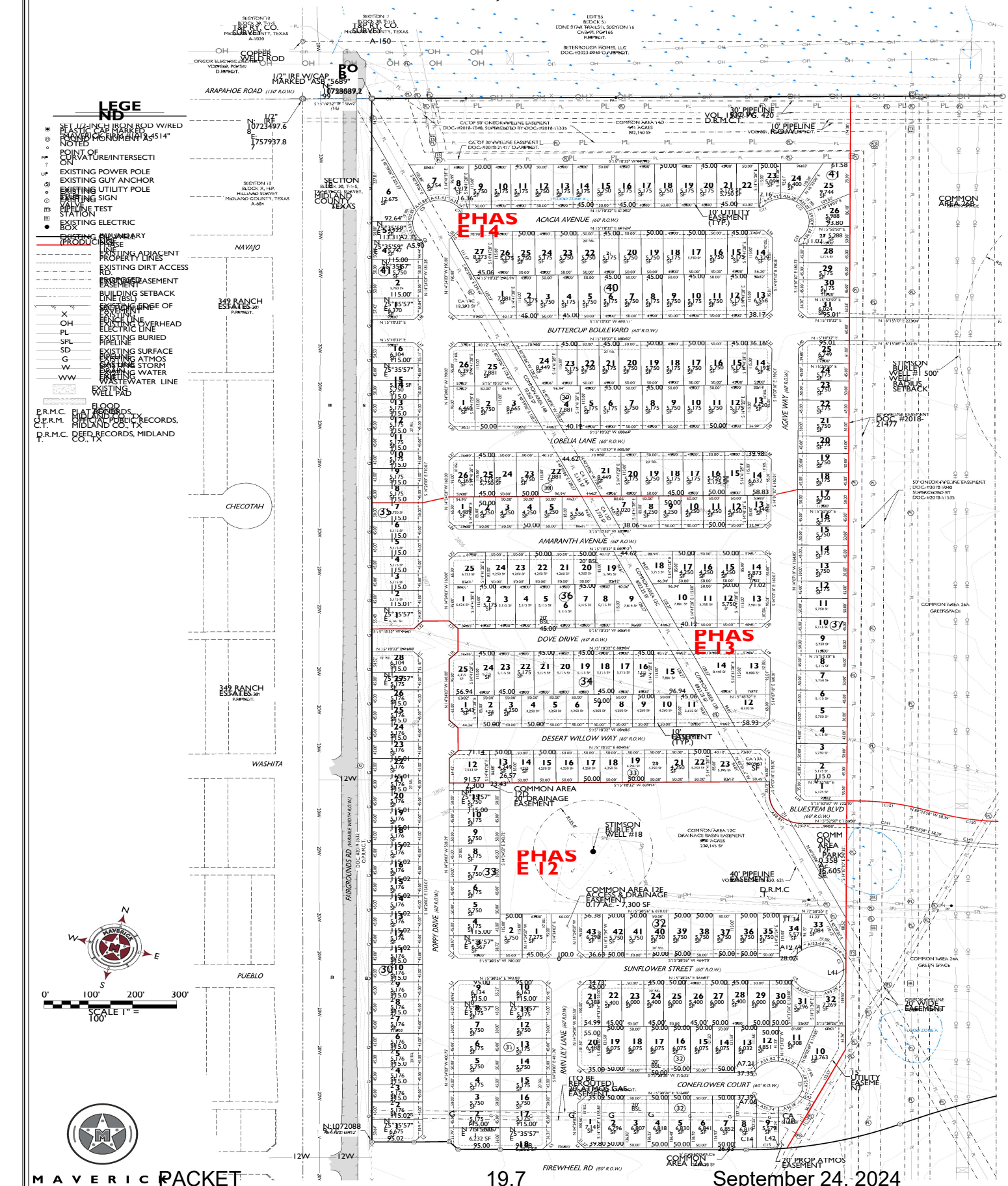

MAVERICK CIVIL ENGINEERING / LAND SURVEYING
1909 West Wall Street, Suite K
Midland, Texas 79701
ENGINEERING FIRM #: F-10780
SURVEY FIRM #: 10194514
Tel: (432) 262-0999 Fax: (432) 262-0989
www.Maverick-Eng.com

PRELIMINARY PLAT

MOCKINGBIRD RIDGE

BEING A 302.39 ACRE TRACT OF LAND, SITUATED IN SECTION 18, BLOCK 38, T-1-S, A-734, T&P RY. CO. SURVEY, CITY OF MIDLAND, MIDLAND COUNTY, TEXAS.

N

W E

S

0' 100' 200' 300'

SCALE 1" = 100'

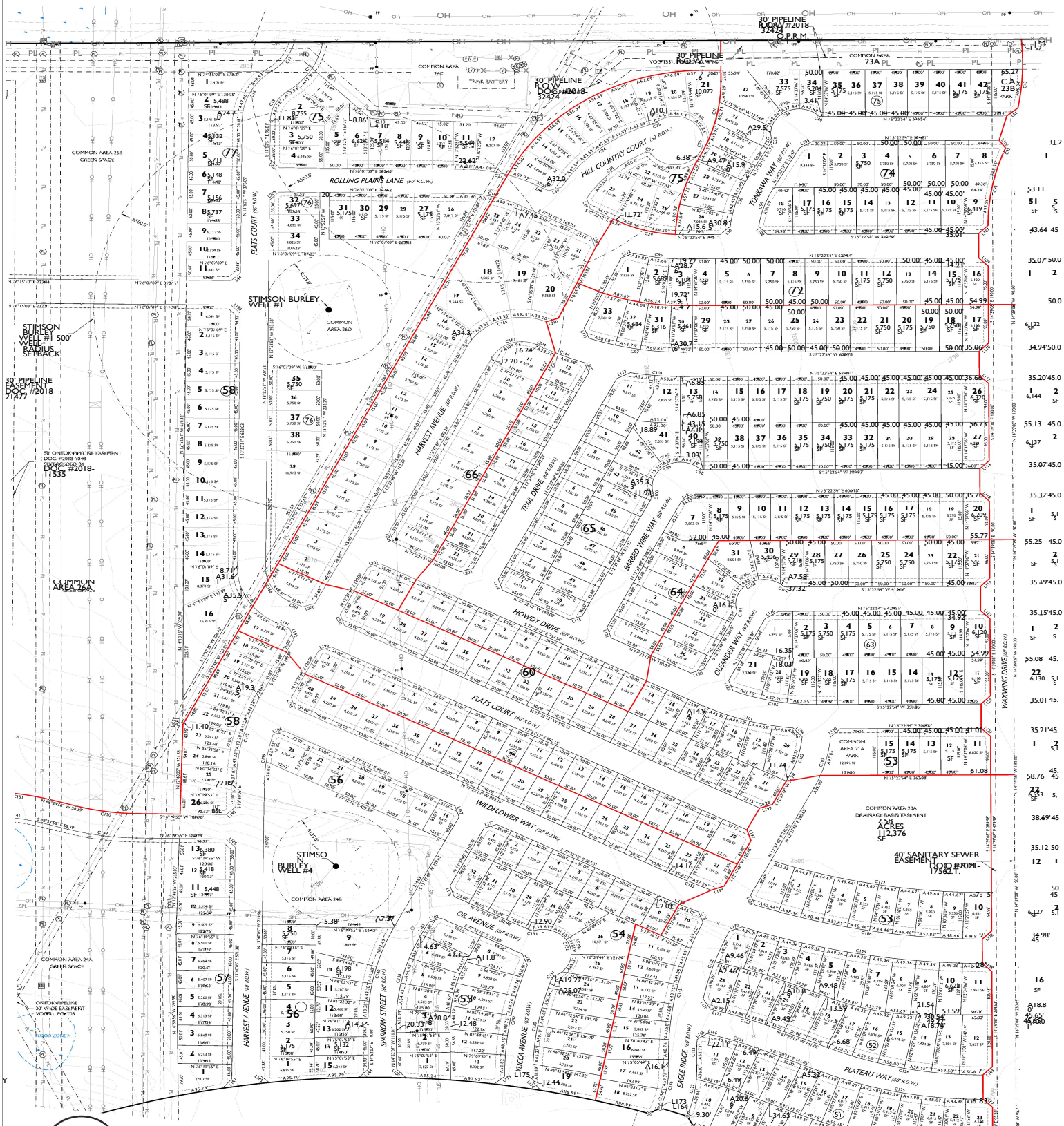

MAVERICK LAND SURVEYING

CIVIL ENGINEERING / LAND SURVEYING
1909 West Wall Street, Suite 1K
Midland, Texas 79701
ENGINEER FIRM #: F-15980
SURVEY FIRM #: 10194513
Tel: (432) 262-0999 Fax: (432) 262-0989
www.Maverick-Eng.com

PRELIMINARY PLAT

MOCKINGBIRD RIDGE

BEING A 302.39 ACRE TRACT OF LAND, SITUATED IN SECTION 18, BLOCK 38, T-1-S, A-734, T&P RY. CO. SURVEY, CITY OF MIDLAND, MIDLAND COUNTY, TEXAS.

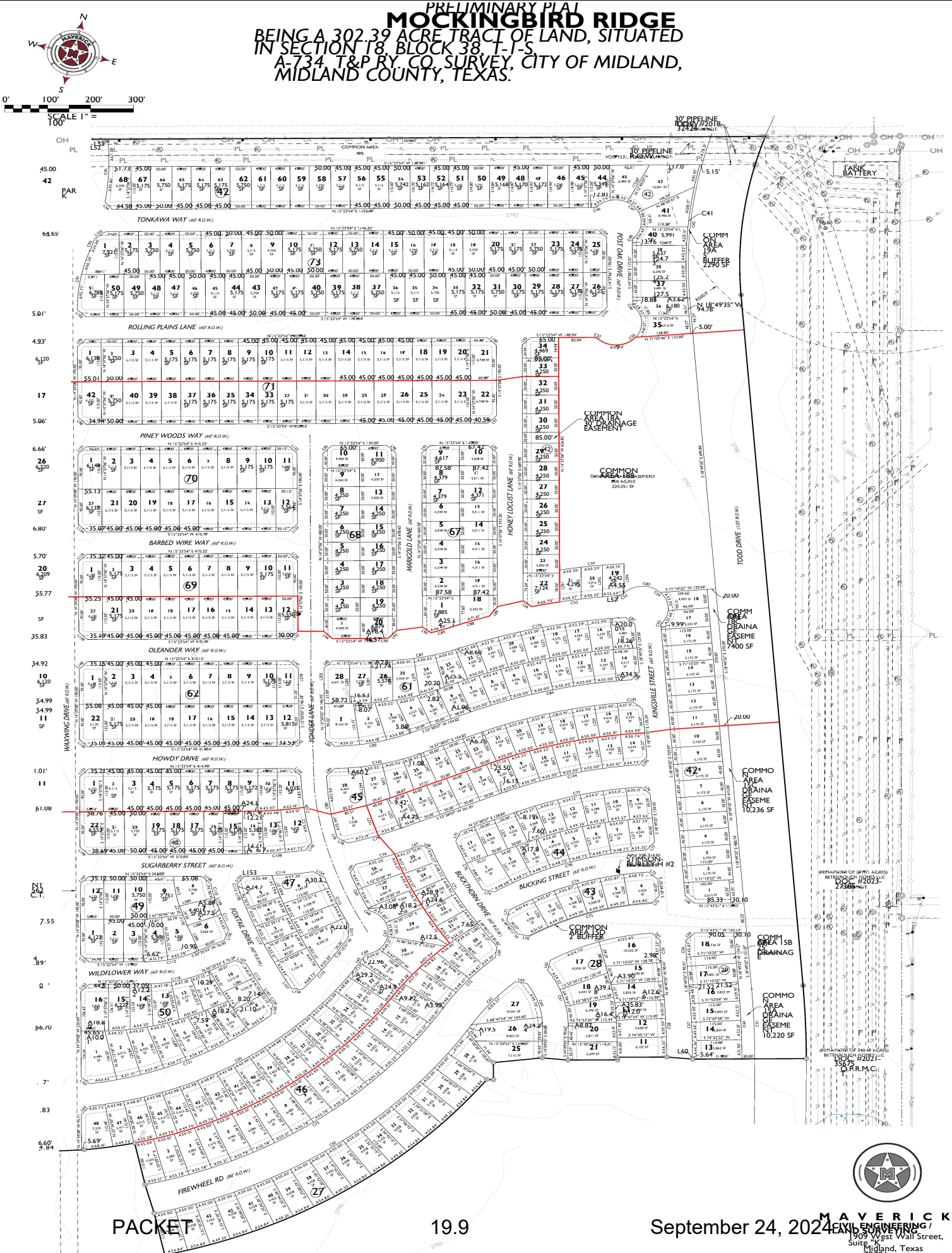

MAVERICK CIVIL ENGINEERING / LAND SURVEYING
1909 West Wall Street, Suite "K"
Midland, Texas 79701
ENGINEER FIRM #: F-15089
SURVEY FIRM #: 10194514
Tel: (432) 262-0880 Fax: (432) 262-0989
www.Maverick-Eng.com

PRELIMINARY PLAT

MOCKINGBIRD RIDGE

BEING A 302.39 ACRE TRACT OF LAND SITUATED IN SECTION 18, BLOCK 38, T-1-S, A-734, T&P RY. CO. SURVEY, CITY OF MIDLAND, MIDLAND COUNTY, TEXAS.

LINE TABLE

LINE	BEARING	DISTANCE
L1	S 29°32'45" W	28.21'
L2	S	28.25'
L3	S 30°39'57" W	28.32'
L4		28.25'
L5	N 60°32'12" E	28.28'
L6		28.30'
L7	S 29°27'48" W	28.32'
L8	E	28.25'
L9	S 30°39'58" W	28.32'
L10		28.25'
L11	S 59°18'05" W	28.32'
L12		28.25'
L13	N 60°32'12" E	28.36'
L14	E	28.14'
L15	N 29°27'48" E	28.27'
L16	S 60°35'41" W	28.43'
L17	N 60°32'12" E	28.21'
L18	S 29°32'45" W	28.36'
L19	W	28.14'
L20	S 29°27'48" W	28.43'
L21	N 60°20'15" E	28.21'
L22	S 29°32'12" W	28.36'
L23	S 29°24'19" W	28.14'
L24	S 29°27'48" W	28.36'
L25	N 60°20'15" E	28.14'
L26	S 29°24'19" W	28.43'
L27	S 29°24'19" W	28.21'
L28	S 30°35'41" W	28.36'
L29	W	28.14'
L30	S 29°32'45" W	28.43'
L31	W	28.21'
L32	N 60°20'15" E	28.36'
L33	E	28.14'
L34	S 29°24'19" W	28.43'
L35	E	28.21'
L36	S 30°35'41" W	28.36'
L37	W	28.14'
L38	N 29°32'45" W	28.21'
L39	W	28.36'
L40	N 60°20'15" E	28.14'
L41	E	28.43'
L42	S 29°24'19" W	4.52'
L43	W	4.82'
L44	N 60°07'09" E	28.40'
L45	E	28.28'
L46	S 29°32'45" W	28.28'
L47	W	28.28'
L48	N 60°20'15" E	37.55'
L49	S 29°27'22" W	28.69'
L50	E	28.29'
L51	S 29°24'19" W	27.79'
L52	S 28°26'56" W	39.63'
L53	S 29°32'45" W	29.47'
L54	S 31°22'55" W	25.59'
L55	N 60°20'15" E	30.97'
L56	S 32°50'11" W	11.25'
L57	S 29°24'19" W	25.00'
L58	S 15°07'22" W	28.39'
L59	E	7.54'
L60	N 60°35'41" E	28.93'
L61	S 28°52'38" W	5.49'
L62	W	28.28'
L63	S 62°53'44" W	27.98'
L64	N	26.82'
L65	E	28.72'
L66	S 00°22'54" W	28.28'
L67	W 21°32'	40.13'
L68	W	28.28'
L69	S 26°56'31" W	28.90'
L70	N	28.28'
L71	N 29°09'29" E	22.91'
L72	S 60°50'31" E	31.93'
L73	S 29°38'07" W	27.82'
L74	S 28°58'16" W	28.21'
L75	S 29°26'41" W	29.13'
L76	N 64°38'01" W	28.28'
L77	S 29°34'21" W	29.13'
L78	W 37.43'	28.62'
L79	S	28.28'
L80	S 60°26'30" E	27.98'
L84		28.28'
L85	S 26°49'31" W	28.08'
L87	N	28.28'
L88	N 60°07'38" E	28.47'
L89	N	28.29'
L90	S 30°19'07" W	27.96'
L91	N	28.28'
L92	S 29°45'27" W	28.97'
L93	W	28.28'
L94	N 60°13'35" W	9.15'
L95	W	28.29'
L96	S 30°22'54" E	32.24'
L97	E	28.28'
L98	S 23°50'03" E	34.55'
L99	E	28.28'
L100	S 26°10'51" W	23.19'
L101	S 29°27'48" W	28.28'
L102	N	28.28'
L103	W 60°04'11" W	26.76'
L104	E	28.29'
L105	N	28.28'
L106	E	27.31'
L107	S	29.81'
L108	E	28.29'
L109	N 30°22'54" W	28.28'
L110	W	32.03'
L111	S 29°38'07" W	28.29'
L112	S	28.28'
L113	N 60°21'53" W	28.28'
L114	N	28.28'
L115	S 29°38'07" W	28.28'
L116	N	28.28'
L117	E	34.15'
L118	S	28.29'
L119	S 29°38'07" W	28.28'
L120	N	28.28'
L121	E	28.28'
L122	S 29°37'06" W	28.28'
L123	S	28.28'
L124	N 60°21'53" W	28.28'
L125	E	34.15'
L126	S 30°22'54" E	28.29'
L127	E	28.28'
L128	S	28.25'
L129	S 29°38'07" W	26.47'
L130	N	28.94'

LINE TABLE

LINE	BEARING	DISTANCE
L131	S 30°21'53" E	28.28'
L132	S	28.28'
L133	S 30°22'54" W	28.28'
L134	N	28.29'
L135	N 29°38'07" E	28.28'
L136	E	28.28'
L137	S	28.28'
L138	E	28.29'
L139	N 29°38'07" E	28.28'
L140	N	28.28'
L141	S	28.28'
L142	S	27.98'
L143	S 60°21'53" E	28.28'
L144	E	28.45'
L145	S	26.71'
L146	E	28.29'
L147	S 29°38'07" W	28.28'
L148	E	29.55'
L149	S	14.97'
L150	S 62°15'07" W	28.88'
L151	S 06°39'06" W	28.29'
L152	S 29°49'03" W	26.47'
L153	E	8.19'
L154	N	20.62'
L155	S 25°22'54" E	34.17'
L156	S	28.28'
L157	N 60°37'06" E	24.85'
L158	N	27.43'
L159	N 29°38'07" E	14.97'
L160	S 60°21'53" E	28.55'
L163	E	29.46'
L164	S 34°47'05" E	26.66'
L165	E	28.28'
L166	N	28.28'
L167	S 34°30'29" E	28.28'
L168	N	28.30'
L169	N 60°33'12" E	28.52'
L170	S	28.49'
L171	S 29°38'07" W	29.54'
L172	S	36.35'
L173	S 29°23'08" W	12.44'
L174	S	28.28'
L175	E	28.28'
L176	S 29°37'48" W	28.28'
L181	S	27.62'
L182	S 29°38'07" W	29.43'
L183	S	28.81'
L184	S 58°47'59" W	39.63'
L185	N	28.28'
L186	S 29°37'48" W	29.74'
L187	S	28.34'
L188	S 30°08'24" W	26.34'
L189	S	25.94'
L190	S 29°03'07" W	28.28'
L191	S	28.28'
L192	S 29°32'12" W	30.64'
L193	S	28.28'
L194	S 29°37'48" W	32.84'
L195	S	28.28'
L196	S 29°32'12" W	29.26'
L197	S	28.28'
L198	S 29°37'48" W	28.28'
L199	S	28.56'
L200	S 29°32'12" W	28.28'
L201	S	28.28'
L202	S 29°37'48" W	28.28'
L203	S	16.24'
L204	S 29°32'12" W	25.93'
L205	S	28.28'
L206	S 29°38'08" W	32.84'
L207	S	28.28'
L208	S 29°07'09" W	28.90'
L209	E	27.39'
L210	S	89.83'
L211	S 29°38'06" W	85.79'
L212	S 29°25'28" W	84.99'
L213	S	84.98'
L214	S 28°49'13" W	84.98'
L215	S	84.98'
L216	S 25°12'58" W	84.99'
L217	S	85.11'
L218	S 31°36'43" W	84.94'
L219	S	84.85'
L220	S 28°00'29" W	84.83'
L221	E	84.89'
L222	S	85.00'
L223	S 29°38'06" W	85.00'
L224	S 29°47'59" W	85.00'
L225	S	83.00'
L226	S 29°38'06" W	83.00'
L227	S	83.00'
L228	S 29°38'06" W	83.00'
L229	S	85.00'
L230	S 27°02'52" W	85.25'
L231	S	84.99'
L232	S 29°38'32" W	84.98'
L233	S	84.97'
L234	S 29°38'41" W	84.96'
L235	S	85.00'
L236	S 29°38'06" W	85.00'
L237	S	85.00'
L238	S 29°21'53" W	85.00'
L239	S	85.00'
L240	S 29°38'06" W	85.00'
L241	S	85.00'
L242	S 26°21'53" W	85.00'
L243	S	104.9'
L244	S 30°22'09" W	93.90'
L245	N	86.74'
L246	N 21°27'26" W	85.02'
L247	N	85.02'
L248	N 29°15'58" W	85.03'
L249	N	85.02'
L250	N 31°35'03" W	85.13'
L251	N	85.13'
L252	N 36°21'53" W	85.18'
L253	N	85.18'
L254	N 36°21'53" W	85.13'
L255	N	85.03'
L256	N 36°02'08" W	99.40'
L257	N	176.2'
L258	N 33°24'25" W	521.6'
L259	N	247.5'
L260	N 30°46'42" W	8.21'
L261	N	
L262	N 36°21'53" W	
L263	N	
L264	N 33°59'35" W	
L265	N	
L266	N 29°21'17" W	
L267	N	
L268	N 24°43'00" W	
L269	N	
L270	N 22°23'51" W	
L271	N	
L272	N 20°04'19" W	
L273	N	
L274	N 15°43'56" W	
L275	N	
L276	N 13°43'00" W	
L277	N	
L278	N 12°07'23" W	
L279	N	
L280	N 10°40'58" W	
L281	N	
L282	N 08°39'36" W	
L283	N	
L284	N 07°38'15" W	
L285	N	
L286	N 06°36'53" W	
L287	N	
L288	N 05°35'32" W	
L289	N	
L290	N 04°34'11" W	
L291	N	
L292	N 03°32'50" W	
L293	N	
L294	N 02°31'29" W	
L295	N	
L296	N 01°30'08" W	
L297	N	
L298	N 00°28'46" W	
L299	N	
L300	N 00°27'25" E	
L301	N	
L302	N 01°28'47" E	
L303	N	
L304	N 02°30'08" E	
L305	N	
L306	N 03°31'29" E	
L307	N	
L308	N 04°32'50" E	
L309	N	
L310	N 05°34'11" E	
L311	N	
L312	N 06°35'32" E	
L313	N	
L314	N 07°36'53" E	
L315	N	
L316	N 08°38'15" E	
L317	N	
L318	N 09°39'36" E	
L319	N	
L320	N 10°40'57" E	
L321	N	
L322	N 11°42'18" E	
L323	N	
L324	N 12°43'39" E	
L325	N	
L326	N 13°45'00" E	
L327	N	
L328	N 14°46'21" E	
L329	N	
L330	N 15°47'42" E	
L331	N	
L332	N 16°49'03" E	
L333	N	
L334	N 17°50'24" E	
L335	N	
L336	N 18°51'45" E	
L337	N	
L338	N 19°53'06" E	
L339	N	
L340	N 20°54'27" E	
L341	N	
L342	N 21°55'48" E	
L343	N	
L344	N 22°57'09" E	
L345	N	
L346	N 23°58'30" E	
L347	N	
L348	N 24°59'51" E	
L349	N	
L350	N 26°01'12" E	
L351	N	
L352	N 27°02'33" E	
L353	N	
L354	N 28°03'54" E	
L355	N	
L356	N 29°05'15" E	
L357	N	
L358	N 30°06'36" E	
L359	N	
L360	N 31°07'57" E	
L361	N	
L362	N 32°09'18" E	
L363	N	
L364	N 33°10'39" E	
L365	N	
L366	N 34°12'00" E	
L367	N	
L368	N 35°13'21" E	
L369	N	
L370	N 36°14'42" E	
L371	N	
L372	N 37°16'03" E	
L373	N	
L374	N 38°17'24" E	
L375	N	
L376	N 39°18'45" E	
L377	N	
L378	N 40°20'06" E	
L379	N	
L380	N 41°21'27" E	
L381	N	
L382	N 42°22'48" E	
L383	N	
L384	N 43°24'09" E	
L385	N	
L386	N 44°25'30" E	
L387	N	
L388	N 45°26'51" E	
L389	N	
L390	N 46°28'12" E	
L391	N	
L392	N 47°29'33" E	
L393	N	
L394	N 48°30'54" E	
L395	N	
L396	N 49°32'15" E	
L397	N	
L398	N 50°33'36" E	
L399	N	
L400	S	115.00'
L401	S 14°25'02" E	7.06'
L402	S 77°37'18" E	72.42'
		115.0
		0

CURVE TABLE

CURVE	ARC LENGTH	RADIUS	DELTA ANGLE	CHORD BEARING	CHORD LENGTH
C1	9563	700.00	39.26'	S 25°50' 40" E	55°08'5
C2	303.9	60.00	68.57	S 59° 24' 19" E	290°17'5
C3	9.63'	700.00	9.26'	S 09° 30' 39" W	55°08'5
C4	304.0	60.00	68.57	S 74° 59' 00" W	55°09'0
C5	9.63'	700.00	9.26'	S 72° 45' 27" W	290°18'0
C6	8.25'	700.00	8.03'	N 13° 06' 17" E	55°09'0
C7	92.9	60.00	119.5	N 19° 11' 00" E	90°00'0
C8	8.25'	700.00	8.03'	S 17° 00' 25" W	47°16'0
C9	193.8	60.00	119.8	S 13° 06' 17" W	184°14'4
C10	8.25'	700.00	8.03'	N 09° 11' 42" E	47°16'0
C11	915.0	700.00	74.92	N 39° 22' 47" E	47°16'0
C12	47.87'	60.00	47.86'	S 00° 38' 09" E	45°43'5
C13	141.3	60.00	136.1	N 81° 56' 32" W	42°16'0
C14	87.56'	150.0	85.63'	N 89° 22' 47" E	85°06'2
C15	145.0	120.0	141.1	N 39° 22' 47" E	69°09'5
C16	84.78'	400.0	81.68'	N 36° 47' 39° E	47°16'0
C17	152.6	300.0	151.3	N 46° 39' 28° E	43°58'1
C18	255.2	350.0	249.6	S 06° 00' 03° W	27°57'5
C19	1'	0	0'	S 48°21'0	7'
C20	84.78'	400.0	81.68'	N 36° 47' 39° E	47°16'0
C21	14.31'	700.00	13.12'	S 33° 28' 51° W	1°46'4
C22	171.0	300.0	168.5	N 89° 00' 21° E	32°03'0
C23	142.6	300.0	141.3	N 06° 35' 26° W	276°44'0
C24	7'	0	0'	N 48°21'0	7'
C25	131.6	350.0	130.7	N 06° 45' 08° E	81°59'1
C26	7'	0	0'	N 48°21'0	7'
C27	14.31'	700.00	13.12'	S 33° 28' 51° W	1°46'4
C28	171.0	300.0	168.5	N 89° 00' 21° E	32°03'0
C29	6'	0	0'	N 48°21'0	7'
C30	142.6	300.0	141.3	N 06° 35' 26° W	276°44'0
C31	131.6	350.0	130.7	N 06° 45' 08° E	81°59'1
C32	7'	0	0'	N 48°21'0	7'
C33	150.9	1515.0	150.8	N 03° 27' 29° E	5°42'1
C34	363.4	1060.0	362.0	S 69° 12' 12° W	19°38'3
C35	77.50	0	07.32'	N 48°21'0	7'
C36	363.1	1160.0	361.6	S 83° 08' 23° E	17°56'1
C37	3'	0	5'	N 48°21'0	7'
C38	158.9	615.00	158.5	N 09° 53' 19° W	14°48'3
C39	186.5	2410.0	186.4	S 09° 51' 31° E	4°26'4
C40	183.2	60.00	169.8	N 11° 28' 21° W	174°21'0
C41	7.92'	700.00	7.71'	N 16° 36' 19° E	1°37'2
C42	189.2	60.00	120.0	S 11° 56' 56° E	180°21'0
C43	188.7	2440.0	188.6	N 11° 52' 42° E	4°26'4
C44	200.2	1430.0	200.0	S 59° 37' 06° E	8°01'2
C45	7.92'	60.00'	7.71'	N 16° 36' 19° E	180°21'0
C46	57.92'	700.00'	07.71'	S 08° 03' 28° W	4°44'3
C47	52.86'	500.00	52.83'	S 27° 17' 40° E	5°51'2
C48	172.5	2295.0	172.4	S 30° 22' 54° W	4°18'2
C49	167.9	2235.0	167.9	S 16° 36' 19° E	4°18'2
C50	57.23'	560.00	57.21'	N 67° 08' 48° E	5°51'2
C51	250.3	550.00	248.1	N 48° 28' 52° E	26°04'4
C52	161.1	260.00	158.6	S 63° 50' 03° E	35°31'0
C53	920.4	3	897.6	S 03° 51' 54° W	44°18'5
C54	154.2	190.0	153.7	S 15° 47' 01° W	16°04'1
C55	155.3	2235.0	155.6	S 53° 51' 07° E	35°30'1
C56	57.23'	560.00	57.21'	S 16° 36' 19° E	6°'
C57	250.3	550.00	248.1	N 67° 08' 48° E	35°31'0
C58	161.1	260.00	158.6	N 48° 28' 52° E	44°18'5
C59	920.4	3	897.6	S 63° 50' 03° E	16°04'1
C60	154.2	190.0	153.7	S 03° 51' 54° W	35°30'1
C61	155.3	2235.0	155.6	S 15° 47' 01° W	4°'
C62	3'	0	0'	S 53° 51' 07° E	48°27'3
C63	7.79'	700.00	7.59'	S 16° 36' 19° E	6°'
C64	196.3	1000.8	196.0	S 16° 40' 24° E	43°10'4
C65	135.5	880.00	135.4	N 16° 40' 24° W	6°39'0
C66	222.7	880.00	222.1	N 15° 53' 55° W	14°30'1
C67	183.7	630.00	183.0	S 58° 26' 26° W	14°30'1
C68	862.6	1110.0	841.1	S 31° 54' 38° E	4°'
C69	344.1	715.00	340.8	N 41° 03' 55° E	27°34'5
C70	298.5	630.00	295.8	N 54° 56' 34° E	27°09'2
C71	145.3	820.00	145.2	S 31° 54' 13° E	10°09'3
C72	299.9	970.00	298.7	N 44° 29' 19° E	13°22'2
C73	375.5	770.00	371.8	N 41° 50' 54° E	27°54'3
C74	132.7	970.00	132.6	N 11° 00' 40° W	7°'
C75	159.8	730.00	159.5	N 16° 09' 10° W	12°32'5
C76	367.2	1470.0	365.8	N 37° 44' 10° W	14°18'5
C77	93.14'	60.00	84.07'	N 57° 27' 41° E	89°00'0
C78	385.6	470.00	384.0	S 42° 25' 02° E	47°'
C79	178.1	440.00	177.1	S 27° 15' 39° W	23°12'2
C80	186.9	675.00	185.9	S 41° 10' 19° W	15°51'2
C81	96.75'	615.00	96.73'	N 57° 59' 40° E	9°'
C82	46.59'	60.00	46.57'	N 58° 17' 23° W	44°'
C83	19.47'	700.00	19.46'	S 58° 17' 23° W	1°'
C84	161.9	770.00	161.0	N 40° 09' 23° W	12°'
C85	114.68'	658.00	114.65'	N 62° 29' 29° E	9°'
C86	184.1	500.00	183.1	S 57° 51' 26° W	21°'
C87	6.52'	60.00	6.35'	S 57° 33' 16° W	6°'
C88	193.0	730.00	192.5	N 22° 24' 07° W	15°'
C89	194.4	786.19	193.9	N 62° 35' 26° E	14°09'0
C90	214.9	230.00	207.3	S 74° 37' 19° W	53°'
C91	180.4	1295.6	180.0	S 62° 34' 54° W	7°'
C92	44.45'	270.00	44.38'	S 64° 29' 46° W	9°'
C93	73.18'	270.00	73.17'	N 65° 16' 42° E	15°'
C94	117.5	170.00	116.6	S 57° 06' 48° W	39°'
C95	24.72'	1030.0	24.70'	S 58° 00' 33° W	1°'
C96	152.8	0	152.7	S 74° 15' 20° W	24°'
C97	140.6	820.00	140.5	N 03° 58' 51° W	9°'
C98	119.0	820.00	118.9	S 08° 55' 38° E	8°'
C99	244.4	1235.6	244.0	N 05° 05' 40° E	11°'
C100	143.7	330.00	142.5	S 06° 00' 40° W	24°'
C101	83.15'	1295.6	83.13'	S 03° 59' 11° E	3°'
C102	11.91'	230.00	11.91'	N 04° 11' 50° E	2°'
C103	467.2	820.00	460.9	N 83° 45' 22° E	32°'
C104	118.6	330.00	117.9	S 85° 18' 34° W	20°'
C105	63.28'	720.00	63.26'	S 85° 18' 34° W	5°'
C106	91.75'	720.00	91.69'	N 83° 03' 39° W	7°'
C107	184.7	730.00	184.2	N 83° 03' 39° W	14°'
C108	9'	10.00'	9'	S 44° 00' 21° W	51°'
C109	385.2	830.00	382.0	S 08° 55' 38° E	26°'
C110	99.40'	820.00	99.33'	S 08° 55' 38° E	6°'
C111	176.2	780.00	175.8	N 90° 00' 22° E	12°'
C112	521.6	720.00	519.0	N 83° 03' 39° W	41°'
C113	247.5	1530.0	246.3	S 44° 00' 21° W	9°'
C114	8.21'	720.00	7.98'	S 08° 55' 38° E	0°'
C115		10.00'		S 86° 26'	

CURVE TABLE

CURVE	ARC LENGTH	RADIUS	DELTA ANGLE	CHORD BEARING	CHORD LENGTH
C135	154.8	780.00	38.1	S 07° 41' 39° E	26°47'0
C136	97.05'	270.00	96.53'	S 05° 47' 21° E	20°35'4
C137	279.6	780.00	278.1	S 04° 26' 39° E	20°32'3
C138	225.5	780.00	223.4	N 01° 07' 09° W	27°29'5
C139	121.6	470.00	121.2	N 05° 44' 53° W	15°50'2
C140	254.3	440.00	251.9	S 01° 07' 09° E	27°29'5
C141	119.4	530.00	119.0	N 83° 39' 26° E	12°55'1
C142	199.6	440.00	198.5	N 64° 25' 43° E	21°34'4
C143	147.6	530.21	147.1	N 82° 52' 58° E	15°06'0
C144	318.5	1030.0	317.3	S 62° 29' 46° W	17°43'1
C145	166.2	0	157.8	N 05° 44' 53° W	91°55'4
C146	202.8	700.00	201.6	S 45° 37' 31° E	16°'
C147	229.4	150.00	207.4	N 79° 11' 26° E	87°29'2
C148	603.7	1470.0	603.0	S 00° 31' 08° E	22°00'3
C149	131.7	500.00	131.4	N 64° 25' 08° E	26°17'5
C150	409.5	650.0	402.9	S 83° 52' 58° E	20°00'0
C151	334.5	800.00	332.3	N 57° 37' 33° W	23°58'5
C152	24.9'	1370.0	24.9'	S 81° 31' 48° E	1°02'2
C153	137.2	995.00	137.1	S 55° 56' 53° W	7°54'1
C154	154.3	995.00	154.3	N 45° 37' 31° W	8°53'5
		1950.0		N 89° 22' 29° E	
				N 48° 46' 27° W	
				N 24° 02' 42° W	
				S 85° J1' 08° W	
				N 63° 09' 14° W	
				S 66° 52' 37° E	
				S 78° 25' 37° E	
				N 81° 45' 01° W	

MAVERICK
CIVIL ENGINEERING / LAND SURVEYING
1909 West Wall Street, Suite "A"
Midland, Texas 79701
ENGINEER FIRM #: F-15089
SURVEY FIRM #: 10194514
Tel: (432) 262-0888
Fax: (432) 262-0889
www.Maverick-Eng.com

PRELIMINARY PLAT

MOCKINGBIRD RIDGE

BEING A 302.38 ACRE TRACT OF LAND, SITUATED IN SECTION 18, BLOCK 38, T-1-S, A-734, T&P RY. CO. SURVEY, CITY OF MIDLAND, MIDLAND COUNTY, TEXAS.

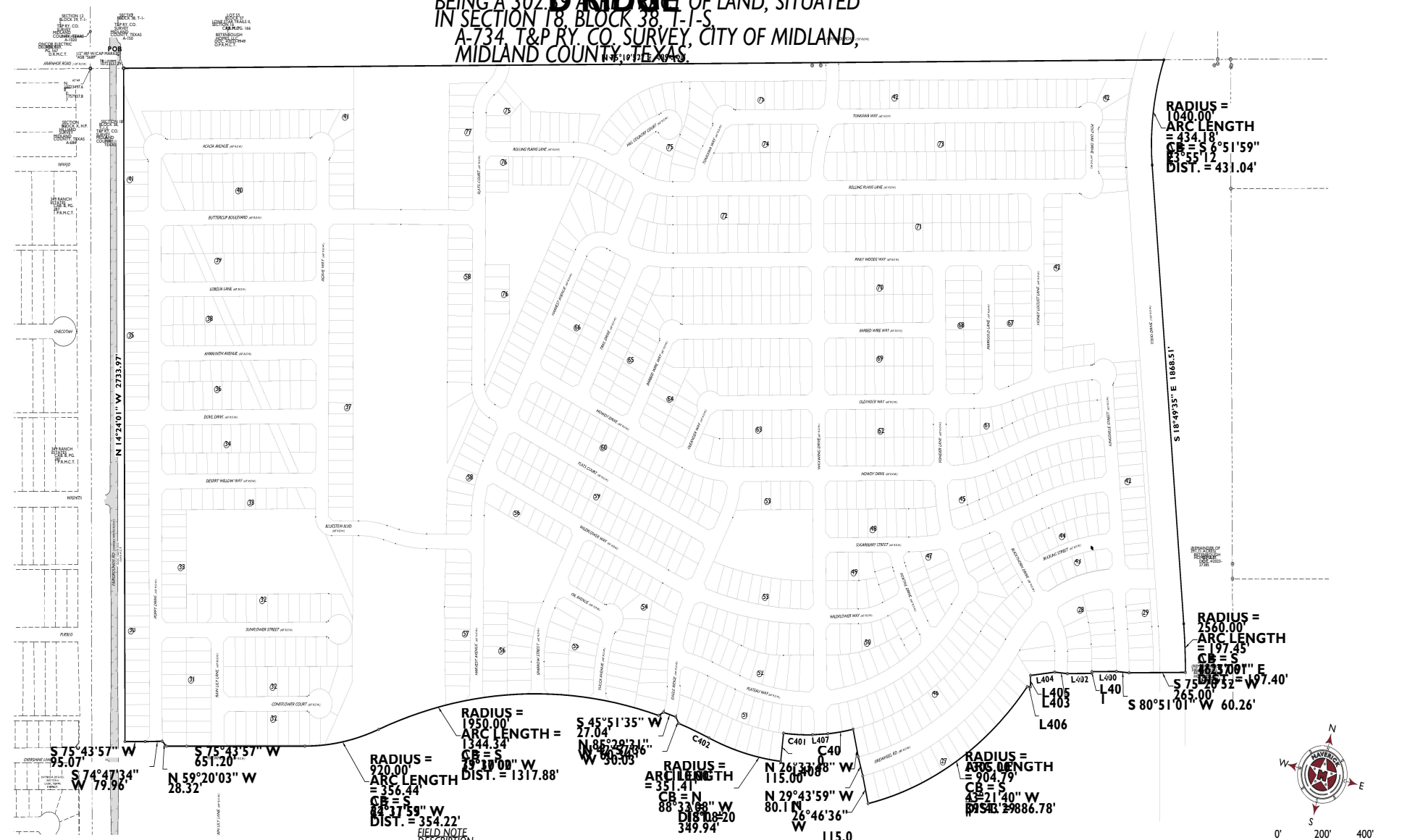

FIELD NOTE DESCRIPTION,

DESCRIPTION OF A 302.38 ACRE TRACT OF LAND, SITUATED IN SECTION 18, BLOCK 38, TOWNSHIP 1 SOUTH, ABSTRACT NUMBER 734, GLO FILE NUMBER 46 1/2, TEXAS and PACIFIC RAILWAY COMPANY SURVEY, MIDLAND COUNTY, TEXAS, AND BEING A PORTION OF THAT SAME TRACT CALLED FOR 30.00 ACRES IN A DEED TO BETENBOUGH-BRANDT TRACT I, LLC, RECORDED IN DOCUMENT NUMBER 20192532 OF THE OFFICIAL PUBLIC RECORDS OF MIDLAND COUNTY, TEXAS, AND BEING MORE PARTICULARLY DESCRIBED BY METES AND BOUNDS AS FOLLOWS;

BEGINNING AT A 1/2" REBAR WITH YELLOW PLASTIC CAP MARKED "ASB 3689", FOUND WITHIN A FENCE CORNER AND ACCEPTED AS BEING IN THE WEST LINE OF THE 22.96 ACRE TRACT DESCRIBED IN DOCUMENT NUMBER 20183532 OF SAID PUBLIC RECORDS, FROM WHICH A ONE HALF INCH IRON ROD FOUND AT A FENCE CORNER AND ACCEPTED AS BEING IN THE NORTH LINE OF THE SOUTHEAST QUARTER OF SAID SECTION 7 OF THE SAME BLOCK BEARS S 75°19'52" E, 1868.51 FEET;

THENCE, WITH THE WEST LINE OF SAID 22.96 ACRE TRACT, AND SECTION 7 OF THE SAME BLOCK, N 14°24'01" W, 2733.97 FEET TO A RECESS CORNER OF THE 22.96 ACRE TRACT, AND THE SOUTHWEST CORNER OF THE 30.00 ACRE TRACT;

THENCE, WITH THE SOUTH LINE OF THE 30.00 ACRE TRACT, AND THE NORTH LINE OF THE 22.96 ACRE TRACT, N 75°19'02" E, 409.44 FEET TO A RED PLASTIC CAP MARKED "ASB 3689", FOUND AT THE SOUTHEAST CORNER OF THE 22.96 ACRE TRACT, AND THE SOUTHWEST CORNER OF DEVELOPMENT PLAT OF MOCKINGBIRD RIDGE;

THENCE, WITH THE SOUTH LINE OF MOCKINGBIRD RIDGE, AND THE NORTH LINE OF THE 30.00 ACRE TRACT, N 75°19'02" E, 1868.51 FEET TO A POINT OF CURVATURE FOR A CURVE TO THE RIGHT HAVING A RADIUS OF 1040.00 FEET AND A CHORD BEARING AND DISTANCE OF S 06°51'59" E, 431.04 FEET BEING ON THE EAST RIGHT-OF-WAY LINE OF FARMERS DAIRY ROAD;

THENCE, WITH THE EAST RIGHT-OF-WAY LINE OF FARMERS DAIRY ROAD, 1868.51 FEET TO A POINT OF CURVATURE FOR A CURVE TO THE RIGHT HAVING A RADIUS OF 2560.00 FEET AND A CHORD BEARING AND DISTANCE OF S 16°37'01" E, 197.40 FEET;

THENCE, CONTINUING WITH THE EAST RIGHT-OF-WAY LINE OF FARMERS DAIRY ROAD, 197.45 FEET TO A POINT OF REVERSE CURVATURE FOR A CURVE TO THE LEFT HAVING A RADIUS OF 2560.00 FEET AND A CHORD BEARING AND DISTANCE OF S 16°37'01" E, 197.40 FEET;

THENCE, CONTINUING WITH THE EAST RIGHT-OF-WAY LINE OF FARMERS DAIRY ROAD, 197.45 FEET TO A POINT OF TANGENCY;

THENCE, CONTINUING WITH THE EAST RIGHT-OF-WAY LINE OF FARMERS DAIRY ROAD, S 18°49'35" E, 1868.51 FEET TO A POINT OF CURVATURE FOR A CURVE TO THE RIGHT HAVING A RADIUS OF 1040.00 FEET AND A CHORD BEARING AND DISTANCE OF S 06°51'59" E, 431.04 FEET BEING ON THE EAST RIGHT-OF-WAY LINE OF FARMERS DAIRY ROAD;

THENCE, CONTINUING WITH THE EAST RIGHT-OF-WAY LINE OF FARMERS DAIRY ROAD, 434.18 FEET TO A POINT OF REVERSE CURVATURE FOR A CURVE TO THE LEFT HAVING A RADIUS OF 2305.00 FEET AND A CHORD BEARING AND DISTANCE OF S 43°21'40" W, 898.78 FEET;

THENCE, CONTINUING WITH THE EAST RIGHT-OF-WAY LINE OF FARMERS DAIRY ROAD, 904.79 FEET TO A POINT OF DEFLECTION RIGHT;

THENCE, CONTINUING WITH THE EAST RIGHT-OF-WAY LINE OF FARMERS DAIRY ROAD, S 75°43'57" W, 95.07 FEET TO AN "RPC" FOUND, TO A POINT OF DEFLECTION LEFT FOR A CURVE TO THE RIGHT HAVING A RADIUS OF 1305.00 FEET AND A CHORD BEARING AND DISTANCE OF S 74°47'34" W, 886.70 FEET;

THENCE, CONTINUING WITH THE EAST RIGHT-OF-WAY LINE OF FARMERS DAIRY ROAD, 904.79 FEET TO A POINT OF DEFLECTION RIGHT;

THENCE, CONTINUING WITH THE EAST RIGHT-OF-WAY LINE OF FARMERS DAIRY ROAD, S 75°43'57" W, 651.20 FEET TO AN "RPC" FOUND, TO A POINT OF DEFLECTION LEFT FOR A CURVE TO THE RIGHT HAVING A RADIUS OF 1950.00 FEET AND A CHORD BEARING AND DISTANCE OF N 59°20'03" W, 28.32 FEET BEING ON THE EAST RIGHT-OF-WAY LINE OF FARMERS DAIRY ROAD;

THENCE, CONTINUING WITH THE EAST RIGHT-OF-WAY LINE OF FARMERS DAIRY ROAD, 28.32 FEET TO A POINT OF DEFLECTION RIGHT;

THENCE, CONTINUING WITH THE EAST RIGHT-OF-WAY LINE OF FARMERS DAIRY ROAD, N 59°20'03" W, 115.00 FEET TO A POINT OF DEFLECTION LEFT FOR A CURVE TO THE RIGHT HAVING A RADIUS OF 1950.00 FEET AND A CHORD BEARING AND DISTANCE OF S 45°51'35" W, 27.04 FEET;

THENCE, CONTINUING WITH THE EAST RIGHT-OF-WAY LINE OF FARMERS DAIRY ROAD, 27.04 FEET TO AN "RPC" FOUND AT A POINT OF DEFLECTION LEFT FOR A CURVE TO THE RIGHT HAVING A RADIUS OF 1950.00 FEET AND A CHORD BEARING AND DISTANCE OF S 88°29'21" W, 60.36 FEET;

THENCE, CONTINUING WITH THE EAST RIGHT-OF-WAY LINE OF FARMERS DAIRY ROAD, 60.36 FEET TO A POINT OF DEFLECTION RIGHT;

THENCE, CONTINUING WITH THE EAST RIGHT-OF-WAY LINE OF FARMERS DAIRY ROAD, S 89°43'59" W, 30.03 FEET;

THENCE, CONTINUING WITH THE EAST RIGHT-OF-WAY LINE OF FARMERS DAIRY ROAD, N 85°29'31" W, 60.51 FEET;

THENCE, CONTINUING WITH THE EAST RIGHT-OF-WAY LINE OF FARMERS DAIRY ROAD, S 89°43'59" W, 46.14' FEET;

THENCE, CONTINUING WITH THE EAST RIGHT-OF-WAY LINE OF FARMERS DAIRY ROAD, S 69°08'15" W, 72.42 FEET TO AN "RPC" FOUND AT A POINT OF DEFLECTION RIGHT FOR A CURVE TO THE RIGHT HAVING A RADIUS OF 1950.00 FEET AND A CHORD BEARING AND DISTANCE OF N 14°24'01" W, 2733.97 FEET TO THE **POINT OF BEGINNING**, CONTAINING 302.39 ACRES OF LAND.

FIELD NOTE DESCRIPTION,

DESCRIPTION OF A 302.38 ACRE TRACT OF LAND, SITUATED IN SECTION 18, BLOCK 38, TOWNSHIP 1 SOUTH, ABSTRACT NUMBER 734, GLO FILE NUMBER 46 1/2, TEXAS and PACIFIC RAILWAY COMPANY SURVEY, MIDLAND COUNTY, TEXAS, AND BEING A PORTION OF THAT SAME TRACT CALLED FOR 30.00 ACRES IN A DEED TO BETENBOUGH-BRANDT TRACT I, LLC, RECORDED IN DOCUMENT NUMBER 20192532 OF THE OFFICIAL PUBLIC RECORDS OF MIDLAND COUNTY, TEXAS, AND BEING MORE PARTICULARLY DESCRIBED BY METES AND BOUNDS AS FOLLOWS;

BEGINNING AT A 1/2" REBAR WITH YELLOW PLASTIC CAP MARKED "ASB 3689", FOUND WITHIN A FENCE CORNER AND ACCEPTED AS BEING IN THE WEST LINE OF THE 22.96 ACRE TRACT DESCRIBED IN DOCUMENT NUMBER 20183532 OF SAID PUBLIC RECORDS, FROM WHICH A ONE HALF INCH IRON ROD FOUND AT A FENCE CORNER AND ACCEPTED AS BEING IN THE NORTH LINE OF THE SOUTHEAST QUARTER OF SAID SECTION 7 OF THE SAME BLOCK BEARS S 75°19'52" W, 1868.51 FEET;

THENCE, WITH THE WEST LINE OF SAID 22.96 ACRE TRACT, AND SECTION 7 OF THE SAME BLOCK, N 14°24'01" W, 2733.97 FEET TO A RECESS CORNER OF THE 22.96 ACRE TRACT, AND THE SOUTHWEST CORNER OF THE 30.00 ACRE TRACT;

THENCE, WITH THE SOUTH LINE OF THE 30.00 ACRE TRACT, AND THE NORTH LINE OF THE 22.96 ACRE TRACT, N 75°19'02" E, 409.44 FEET TO A RED PLASTIC CAP MARKED "ASB 3689", FOUND AT THE SOUTHEAST CORNER OF THE 22.96 ACRE TRACT, AND THE SOUTHWEST CORNER OF DEVELOPMENT PLAT OF MOCKINGBIRD RIDGE;

THENCE, WITH THE SOUTH LINE OF MOCKINGBIRD RIDGE, AND THE NORTH LINE OF THE 30.00 ACRE TRACT, N 75°19'02" E, 1868.51 FEET TO A POINT OF CURVATURE FOR A CURVE TO THE RIGHT HAVING A RADIUS OF 1040.00 FEET AND A CHORD BEARING AND DISTANCE OF S 06°51'59" E, 431.04 FEET BEING ON THE EAST RIGHT-OF-WAY LINE OF FARMERS DAIRY ROAD;

THENCE, WITH THE EAST RIGHT-OF-WAY LINE OF FARMERS DAIRY ROAD, 1868.51 FEET TO A POINT OF CURVATURE FOR A CURVE TO THE RIGHT HAVING A RADIUS OF 2560.00 FEET AND A CHORD BEARING AND DISTANCE OF S 16°37'01" E, 197.40 FEET;

THENCE, CONTINUING WITH THE EAST RIGHT-OF-WAY LINE OF FARMERS DAIRY ROAD, 197.45 FEET TO A POINT OF REVERSE CURVATURE FOR A CURVE TO THE LEFT HAVING A RADIUS OF 2560.00 FEET AND A CHORD BEARING AND DISTANCE OF S 16°37'01" E, 197.40 FEET;

THENCE, CONTINUING WITH THE EAST RIGHT-OF-WAY LINE OF FARMERS DAIRY ROAD, 197.45 FEET TO A POINT OF TANGENCY;

THENCE, CONTINUING WITH THE EAST RIGHT-OF-WAY LINE OF FARMERS DAIRY ROAD, S 18°49'35" E, 1868.51 FEET TO A POINT OF CURVATURE FOR A CURVE TO THE RIGHT HAVING A RADIUS OF 1040.00 FEET AND A CHORD BEARING AND DISTANCE OF S 06°51'59" E, 431.04 FEET BEING ON THE EAST RIGHT-OF-WAY LINE OF FARMERS DAIRY ROAD;

THENCE, CONTINUING WITH THE EAST RIGHT-OF-WAY LINE OF FARMERS DAIRY ROAD, 434.18 FEET TO A POINT OF REVERSE CURVATURE FOR A CURVE TO THE LEFT HAVING A RADIUS OF 2305.00 FEET AND A CHORD BEARING AND DISTANCE OF S 43°21'40" W, 898.78 FEET;

THENCE, CONTINUING WITH THE EAST RIGHT-OF-WAY LINE OF FARMERS DAIRY ROAD, 904.79 FEET TO A POINT OF DEFLECTION RIGHT;

THENCE, CONTINUING WITH THE EAST RIGHT-OF-WAY LINE OF FARMERS DAIRY ROAD, S 75°43'57" W, 95.07 FEET TO AN "RPC" FOUND, TO A POINT OF DEFLECTION LEFT FOR A CURVE TO THE RIGHT HAVING A RADIUS OF 1305.00 FEET AND A CHORD BEARING AND DISTANCE OF S 74°47'34" W, 886.70 FEET;

THENCE, CONTINUING WITH THE EAST RIGHT-OF-WAY LINE OF FARMERS DAIRY ROAD, 904.79 FEET TO A POINT OF DEFLECTION RIGHT;

THENCE, CONTINUING WITH THE EAST RIGHT-OF-WAY LINE OF FARMERS DAIRY ROAD, S 75°43'57" W, 651.20 FEET TO AN "RPC" FOUND, TO A POINT OF DEFLECTION LEFT FOR A CURVE TO THE RIGHT HAVING A RADIUS OF 1950.00 FEET AND A CHORD BEARING AND DISTANCE OF N 59°20'03" W, 28.32 FEET BEING ON THE EAST RIGHT-OF-WAY LINE OF FARMERS DAIRY ROAD;

THENCE, CONTINUING WITH THE EAST RIGHT-OF-WAY LINE OF FARMERS DAIRY ROAD, 28.32 FEET TO A POINT OF DEFLECTION RIGHT;

THENCE, CONTINUING WITH THE EAST RIGHT-OF-WAY LINE OF FARMERS DAIRY ROAD, N 59°20'03" W, 115.00 FEET TO A POINT OF DEFLECTION LEFT FOR A CURVE TO THE RIGHT HAVING A RADIUS OF 1950.00 FEET AND A CHORD BEARING AND DISTANCE OF S 45°51'35" W, 27.04 FEET;

THENCE, CONTINUING WITH THE EAST RIGHT-OF-WAY LINE OF FARMERS DAIRY ROAD, 27.04 FEET TO AN "RPC" FOUND AT A POINT OF DEFLECTION LEFT FOR A CURVE TO THE RIGHT HAVING A RADIUS OF 1950.00 FEET AND A CHORD BEARING AND DISTANCE OF S 88°29'21" W, 60.36 FEET;

THENCE, CONTINUING WITH THE EAST RIGHT-OF-WAY LINE OF FARMERS DAIRY ROAD, 60.36 FEET TO A POINT OF DEFLECTION RIGHT;

THENCE, CONTINUING WITH THE EAST RIGHT-OF-WAY LINE OF FARMERS DAIRY ROAD, S 89°43'59" W, 30.03 FEET;

THENCE, CONTINUING WITH THE EAST RIGHT-OF-WAY LINE OF FARMERS DAIRY ROAD, N 85°29'31" W, 60.51 FEET;

THENCE, CONTINUING WITH THE EAST RIGHT-OF-WAY LINE OF FARMERS DAIRY ROAD, S 89°43'59" W, 46.14' FEET;

THENCE, CONTINUING WITH THE EAST RIGHT-OF-WAY LINE OF FARMERS DAIRY ROAD, S 69°08'15" W, 72.42 FEET TO AN "RPC" FOUND AT A POINT OF DEFLECTION RIGHT FOR A CURVE TO THE RIGHT HAVING A RADIUS OF 1950.00 FEET AND A CHORD BEARING AND DISTANCE OF N 14°24'01" W, 2733.97 FEET TO THE **POINT OF BEGINNING**, CONTAINING 302.39 ACRES OF LAND.

LINE TABLE		
LINE	BEARING	DISTANCE
L400	S 75°20'52" W	115.00'
L401	S 14°25'02" E	7.06'
L402	S 75°20'52" W	60.27'
L403	S 81°34'39" W	174.6 2'
L404	S 69°08'15" W	46.14'
L405	S 69°08'15" W	15.51'
L406	S 75°20'52" W	72.42
L407	S 14°25'02" E	115.0 0'

CURVE TABLE					
CURVE	ARC LENGTH	RADIUS	DELTA ANGLE	CHORD BEARING	CHORD LENGTH
C400	119.2 7'	995.00	6°52' 2"	S 66°52' 37" W	6.52'0
C401	137.2 4'	995.00	7°54' 3"	S 70°25' 37" W	7°54'1 0"
C402	154.3 4'	1950.0 0'	4°32' 0"	N 81°45' 01" W	4°32'0

MAVERICK
CIVIL ENGINEERING / LAND SURVEYING
909 West Wall Street, Suite "K"
Midland, Texas 79701
ENGINEER FIRM #: F-15089
SURVEY FIRM #: 10194514
Tel: (432) 262-0999 Fax: (432) 262-0989
www.maverick-texas.com

PACKET 19.11 September 24, 2024

MOCKINGBIRD RIDGE

Drawing: F:\2021\1012\BETENBOUGH-BRANDT TRACT I\DRAWINGS\PLAT\NORTH MOCKINGBIRD\PRELIM PLAT - NORTH\10122 PR NORTH PRELIM PLAT.DWG, Last Saved By: ADevine, on 8/6/24

Docusign Envelope ID: EB560943-88F0-4B46-9A2A-11D9468DF111

MIDLAND Planning Division

Preliminary Plat Application

Project Number: Sub-24-0761

Case Number:

Proposed Subdivision Plat Name: MOCKINGBIRD RIDGE

Legal Description (attached sealed Metes and Bounds): BEING A 302.39 ACRE TRACT OF LAND, SITUATED IN SECTION 18, BLOCK 38, T-1-S, A-734, T&P RY. CO. SURVEY, CITY OF MIDLAND, MIDLAND COUNTY, TEXAS

Property Owner Printed Name: BETENBOUGH HOMES, LLC		Phone (432) 262-0999 Email ronniew@betenbough.com	
Address 6305 82ND ST	City LUBBOCK	State TX	Zip 79424

Developer *(if different than Owner)* Printed Name:		Phone (432) 262-0999 Email	
Address	City	State	Zip

Representative *(if acting as Agent, see affidavit on page 2)* Firm: MAVERICK ENGINEERING Printed Name: PALADIN HUCKABA		Phone (432) 262-0999 Email phuckaba@maverick-eng.com	
Address 1909 W. WALL ST. SUITE K	City MIDLAND	State TX	Zip 79701

Current Zoning: LR, TH, MF16, SF3, SF2, SF1, 2F

Reason for Platting: OWNERSHIP

Plat Information	Total Acreage: 302.39
Type: ■ Single-Family Residential ☐ Multi-Family Residential ☐ Commercial ☐ Extraterritorial Jurisdiction (ETJ)	
Number of Lots: 1322	Number of Multi-family Dwelling Units:

Submittal and Fees
Items to be submitted with this application form:

- 1 FOLDED Copy of Dimensioned Plat
- 1 Extra Copy (11x17)
- Digital Files (JPEG & PDF)
- Application Fee – Payable to the 'City of Midland'

Request for a Development Agreement
Do you expect to request a development agreement with the City? ☐ Yes ☐ No
If yes, contact the City Engineer at (432) 685-7286

Provisions
A plat application will not be considered filed pursuant to Section 212.009 of the Texas Local Government Code until all required documents and fees have been submitted and ***all of the terms and conditions of the Subdivision Ordinance, including all necessary studies, plans and supporting information are accepted and approved,*** or the applicant has filed a waiver request for sections from which the plat deviates. Once a plat meets the requirements to be considered filed with the City, the application will be placed on the Planning and Zoning Commission agenda for consideration under the time requirements set out in Section 212.009.

Signature *(by property owner only – authorized agent must sign affidavit below)*

Property Owner (signature): Signed by: Abe Fuentez — Date: 8/6/2024

Property Owner (printed): Abe Fuentez

The Preliminary Plat shall be considered officially received in the Planning office only when it has been submitted in full compliance with the provisions of Section 212 of the Texas Local Government Code and the Subdivision Code of Ordinances of the City of Midland and when such required items for the application are also received.

All materials, including exhibits, submitted in support of an application, or displayed during a public hearing, shall remain the property of the City of Midland.

STATE OF TEXAS
COUNTY OF MIDLAND

Before me, the undersigned authority, on this day personally appeared Ashlee Devine who, being by me duly sworn, upon oath says: That (s)he is the owner of Mockingbird Ridge or is authorized by Betenbaugh Homes the owner of the above described property, to fully represent him/her in this application and that (s)he had the legal right, power and authority to sign said owner's name hereto as his/her attorney in fact.

Ashlee Devine
Authorized Agent (*signature*)

Subscribed and sworn to before me, this 6th day of August, 20 24, to certify which witness my hand and seal of office.

SAVANNAH DAVIS
Notary Public, State of Texas
Comm. Expires 05-20-2028
Notary ID 134907724

NOTARY PUBLIC, MIDLAND COUNTY, TEXAS

FOR OFFICE USE ONLY

☐ Property Owner Authorization ☐ 1 Copy of Dimensioned Plat ☐ Plat in Digital Format (PDF/JPEG)
☐ Application Fee ☐ 1 Copy of Plat (11x17)
Check # 4935

Received By: Date: RECEIVED AUG 07 2024 BY:

****Application will not be considered for scheduling until reviewed by a planner.****

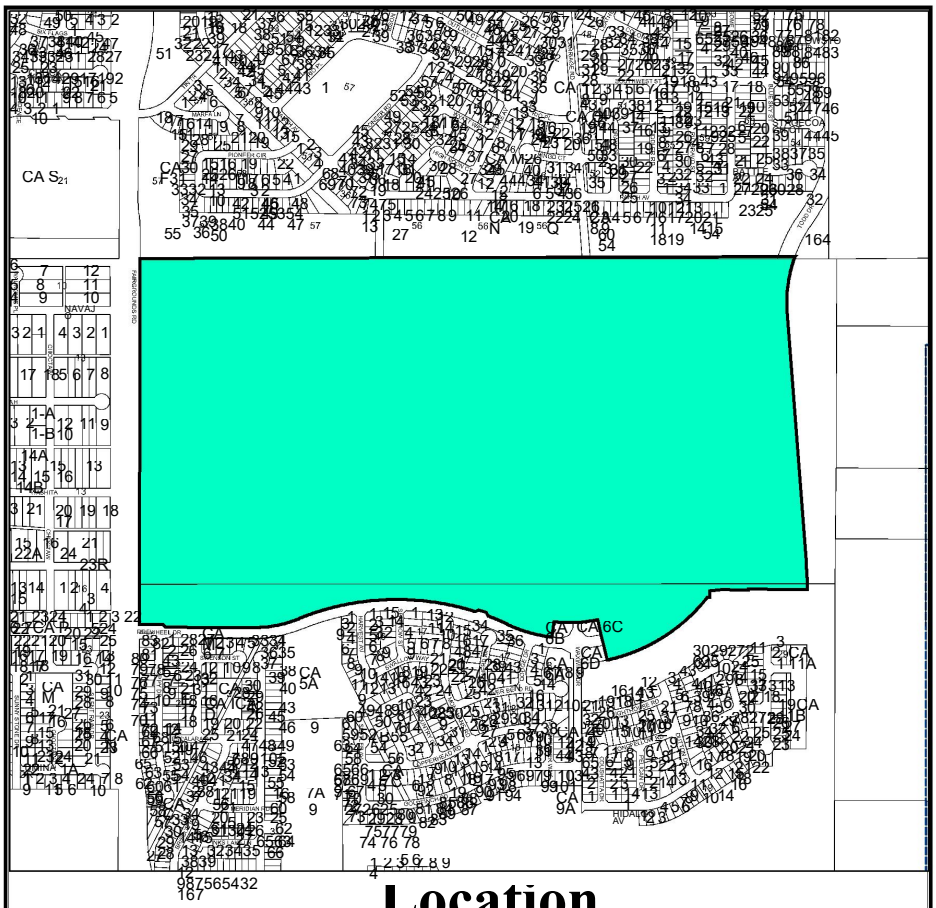

Location Map

SUB-24-0761

Scale: 1" = 877'

Proposed plat of Mockingbird Ridge North, being a plat of a 302.39-acre tract of land, located in Section 18, Block 38, T-1-S, A-734, 18 Pt. Ceo. Generally located southeast of the Intersection of Midland Texas Fairgrounds Road and Arapahoe Road. (Council District 1)

LEGEND

- CITY LIMITS
- PARCEL
- PRIVATE BLDGS

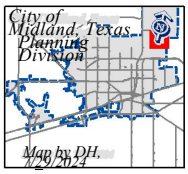

©THE CITY OF MIDLAND - 2021

THIS DATA IS NOT A SUBSTITUTION FOR A SURVEY PRODUCT, NOR IS IT DESIGNED TO BE USED AS A PRIMARY TOOL IN PERMITTING OR OTHER DECISIONS BASED SOLELY ON THE INFORMATION CONTAINED HEREIN.

THE CITY OF MIDLAND SHALL NOT BE RESPONSIBLE FOR ANY DECISIONS BASED UPON THE USE OF THIS DATA.

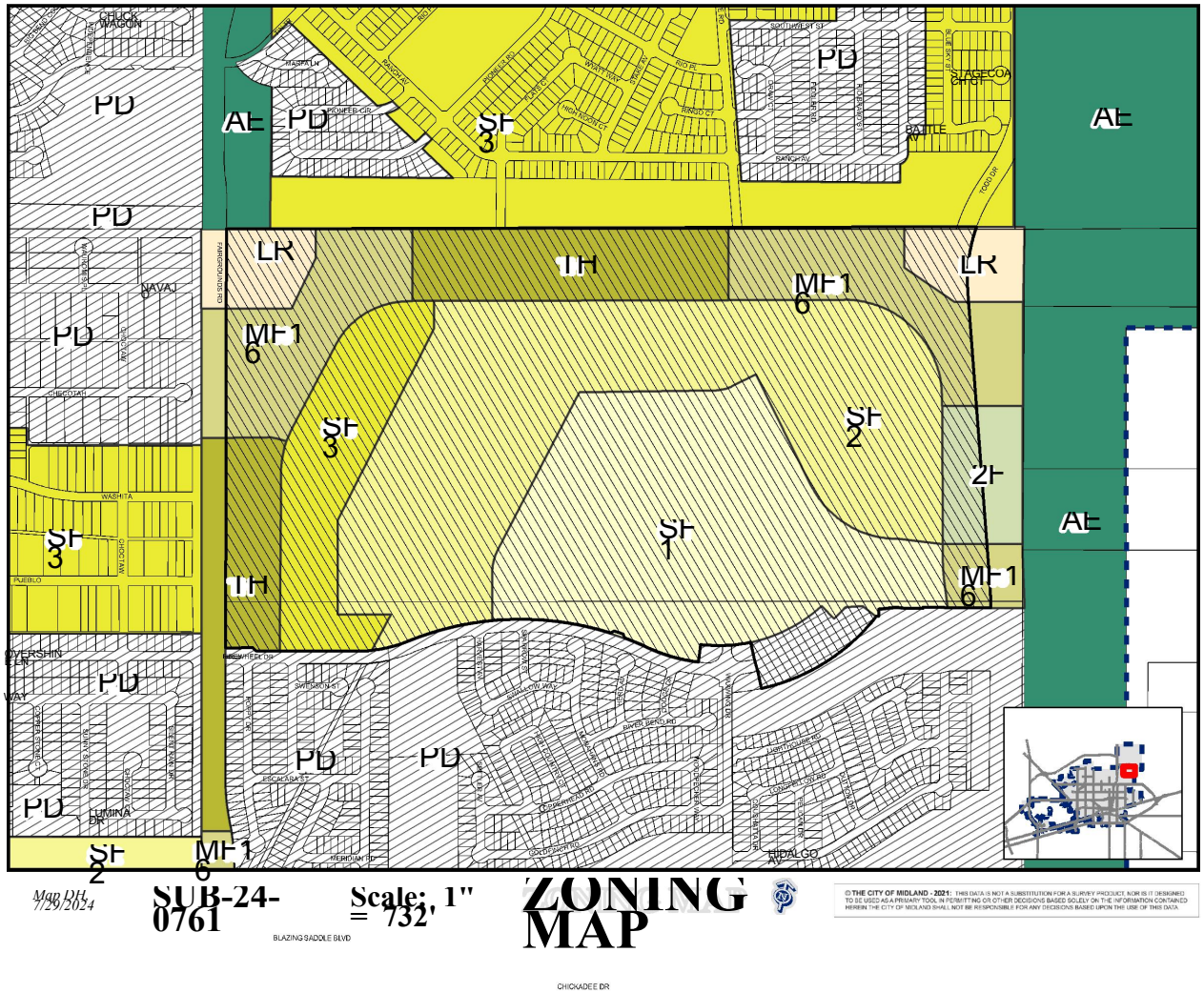

© THE CITY OF MIDLAND - 2021: THIS DATA IS NOT A SUBSTITUTION FOR A SURVEY PRODUCT, NOR IS IT DESIGNED TO BE USED AS A PRIMARY TOOL IN PERMITTING OR OTHER DECISIONS BASED SOLELY ON THE INFORMATION CONTAINED HEREIN. THE CITY OF MIDLAND SHALL NOT BE RESPONSIBLE FOR ANY DECISIONS BASED UPON THE USE OF THIS DATA.

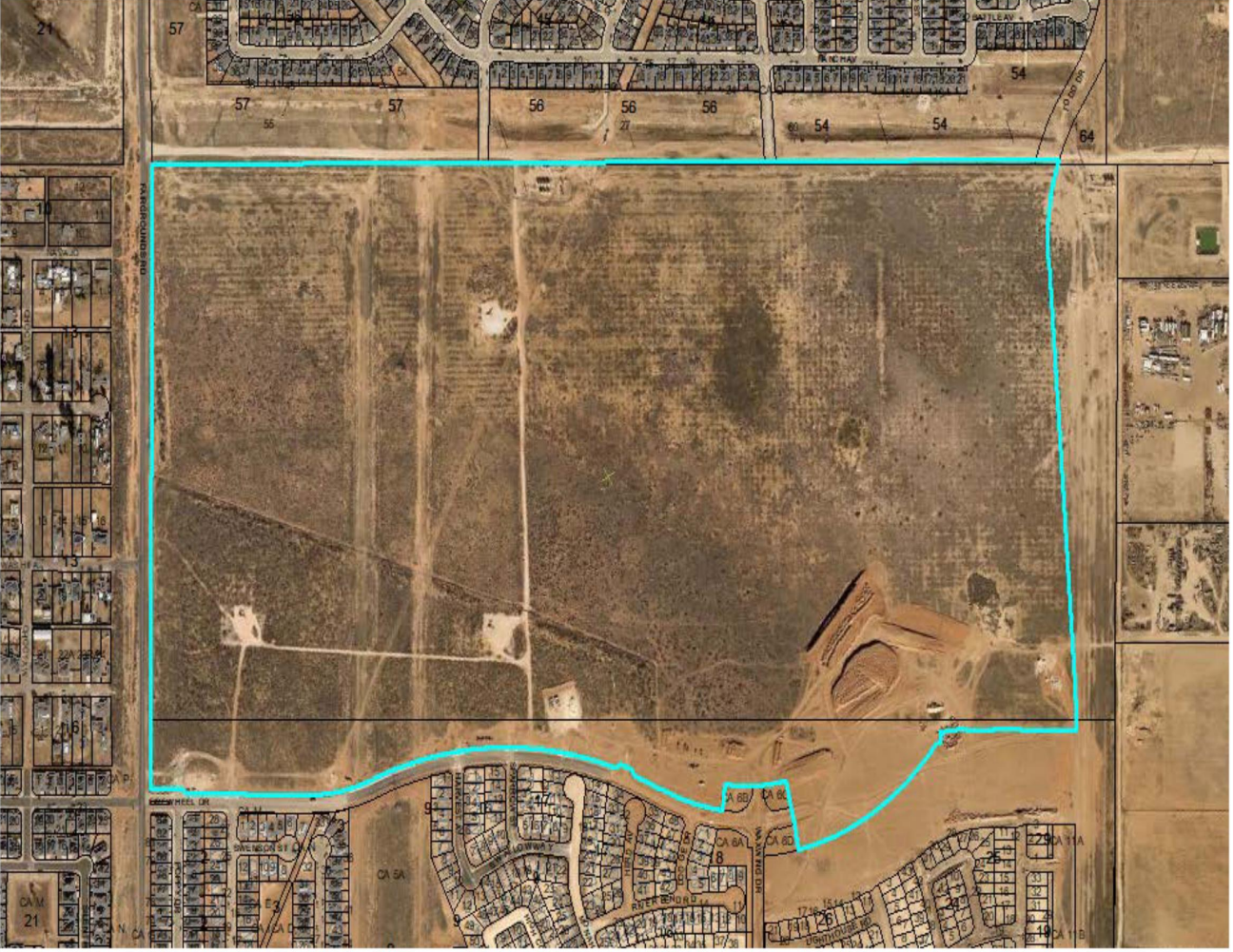


MIDLAND
Be the Energy!
Mockingbird Ridge
ITEM #
PRELIMINARY PLAT
September 24, 2024
Visit Our Website
MIDLANDTEXAS.GOV

Application Summary

- **Property Owner & Developer:** Betenbough Homes, LLC
- **Developer:** Paladin Huckaba with Maverick Engineering
- Plat
- **Address:** Generally located southeast of the intersection of Fairgrounds Road and Arapahoe Road (District 1)

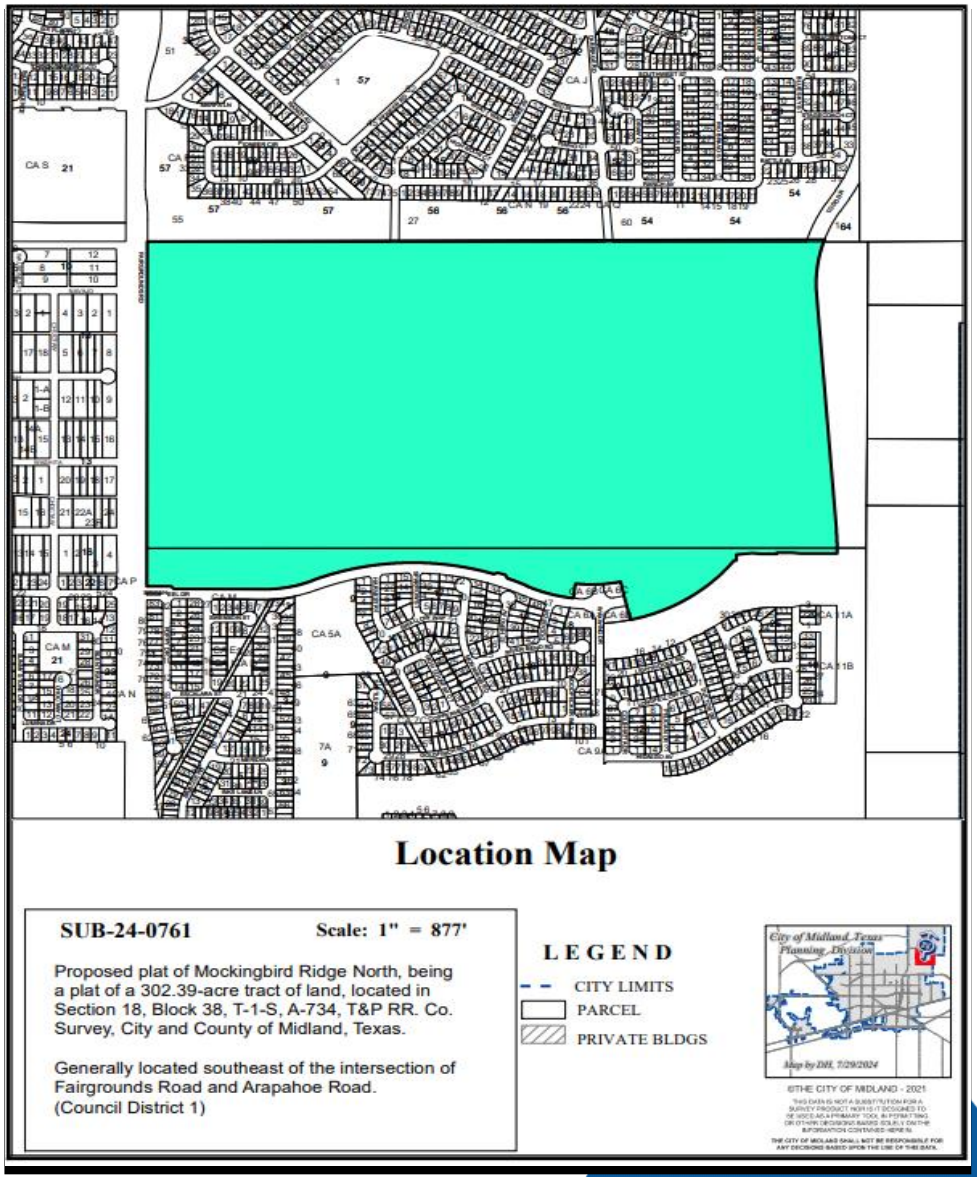

Plat Details

- **Acreage:** 302.3-acres
- **Number of lots:** Platting the property into 1,322 lots
- **Reason for Request:** To allow for Housing Development to allow for the development of multi-use site including single family housing, cottage housing, and greenspace/detention

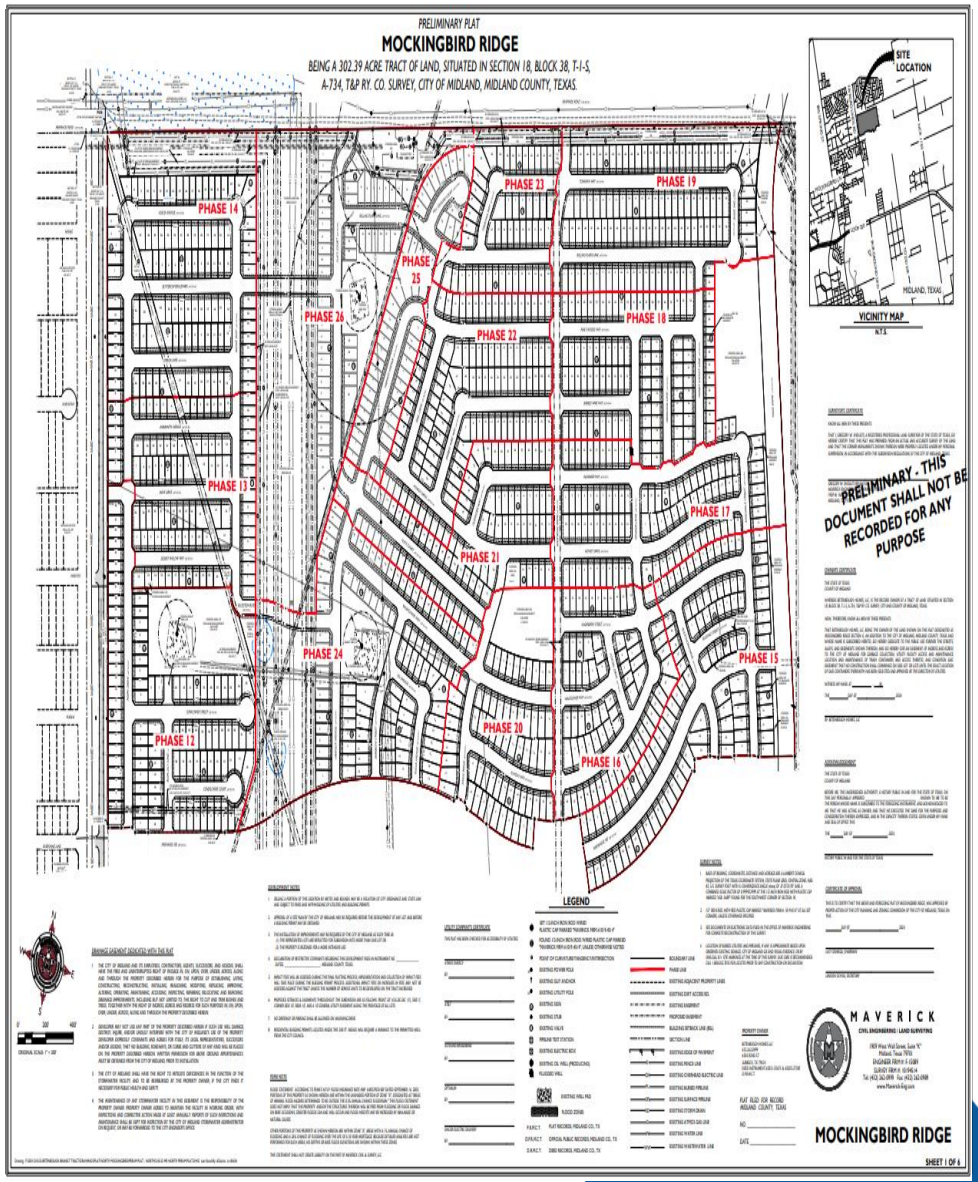

Zoning

- Current Zoning:
  - LR, Local Retail District
  - TH, Townhouse (Attached) Dwelling District
  - MF-16, Multiple-Family Dwelling District
  - SF-3, Single-Family Dwelling District
  - SF-2, Single-Family Dwelling District
  - SF-1, Single-Family Dwelling District
  - 2F, Two-Family Dwelling (Duplex) District

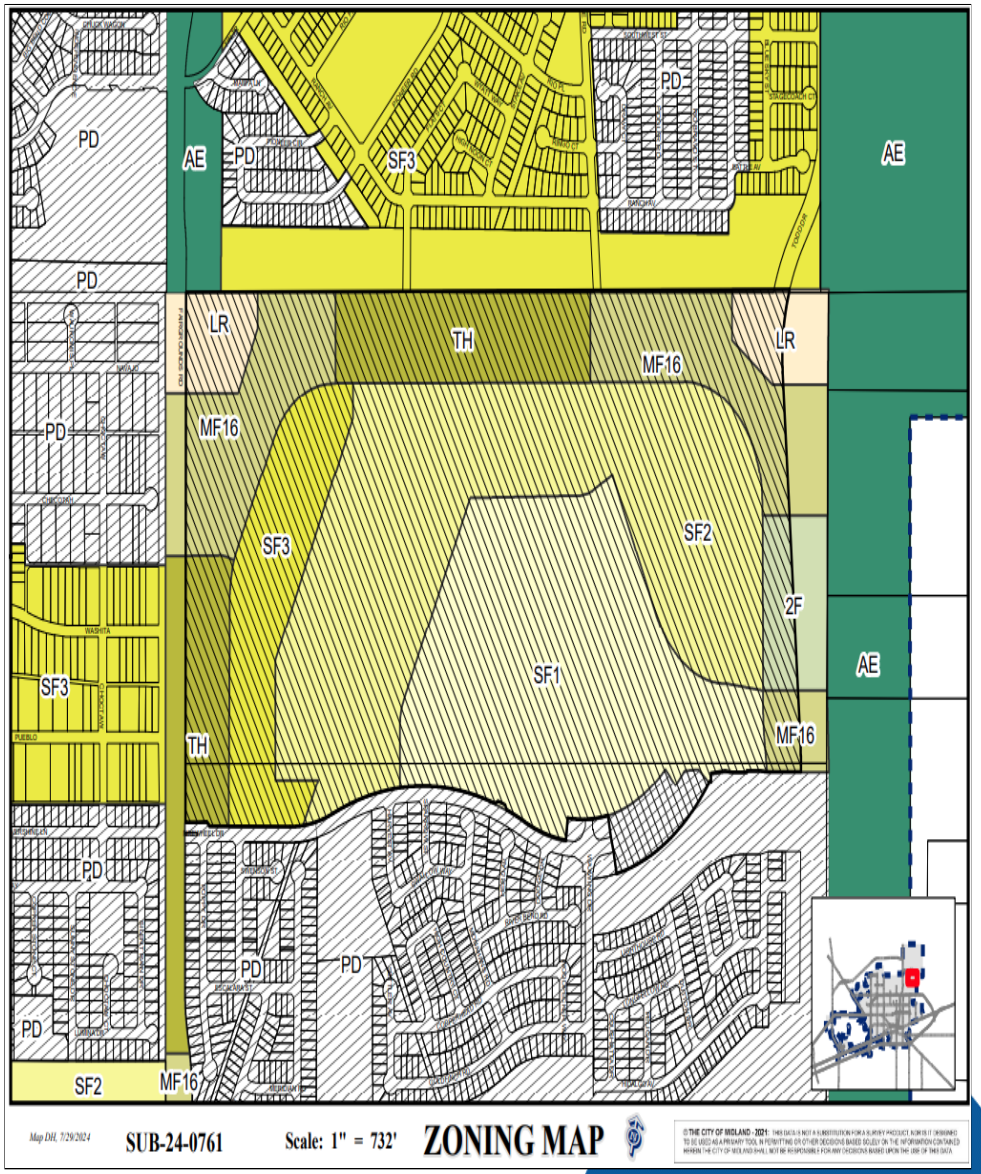

Zoning

- Surrounding Zoning:
  - AE, Agricultural Estate District
  - LR, Local Retail District
  - TH, Townhouse (Attached) Dwelling District
  - MF-16, Multiple-Family Dwelling District
  - SF-3, Single-Family Dwelling District
  - SF-1, Single-Family Dwelling District
  - 2F, Two-Family Dwelling (Duplex) District

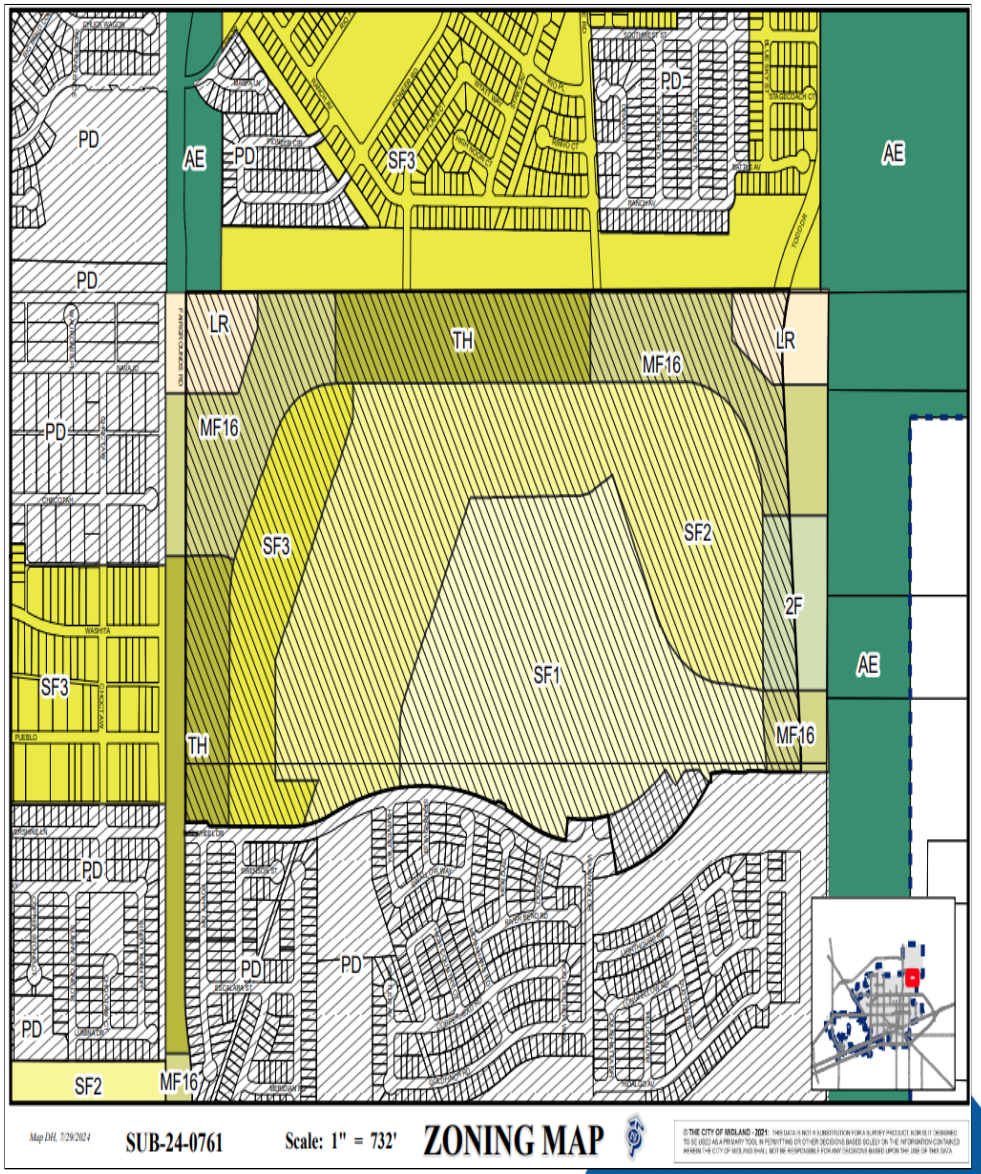

Land Use

- **Current Use:** Vacant, undeveloped
- **Proposed Use:** Residential
  - 1,322 single-family residential lots
  - One neighborhood parks, two pocket parks, including two play structures*
  - Addition of 1.7 miles of multi-use trail + tree-lined sidewalks, providing connectivity throughout development*
- **Surrounding Uses:**
  - North, West, & South: Residential
  - East: Industrial Uses / Businesses



Site Photo



On Fairgrounds Road, looking East

Comprehensive Plan

- **TCT Land Use Designation:**
  - Urban-Medium (U-M)
  - Urban Residential-Low (UR-L)
- **Supported Uses:**
  - Single-family housing
  - Complementary uses
  - Parkway

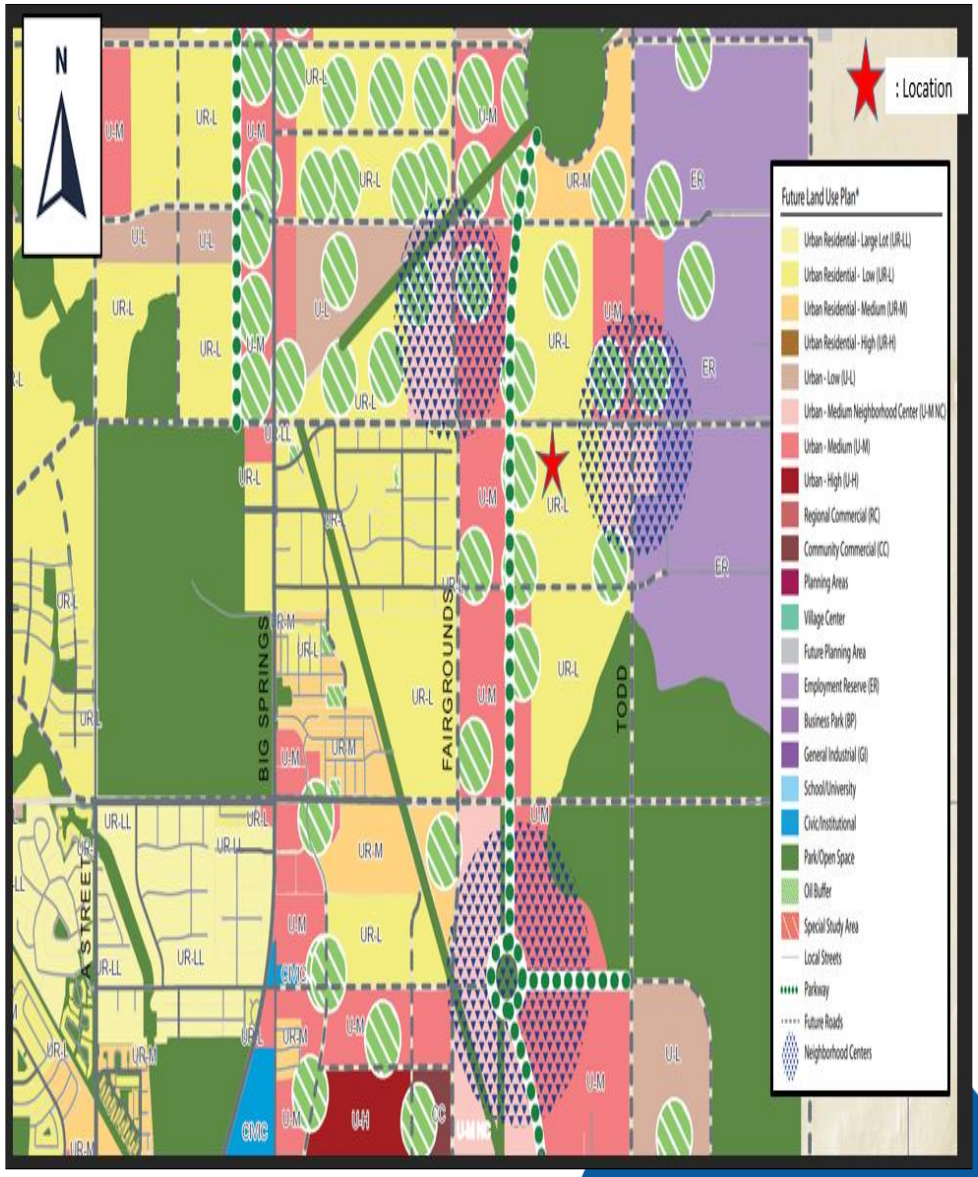

Staff's Recommendation

- The Planning & Zoning Commission recommended approval of this plat on September 3, 2024.
- Staff recommends APPROVAL of the preliminary plat of Mockingbird Ridge subject to the following conditions.

MISSION

Deliver exceptional services and promote a high quality of life and place for ALL our citizens.



City Council Meeting

Item Number: 20

Meeting Date: September 24, 2024

To: City Council / City Manager

From: Gabe McClelland, Director

Subject: **MOTION AUTHORIZING THE EXECUTION OF AN INTERLOCAL AGREEMENT WITH MIDLAND COUNTY UNDER WHICH THE CITY WILL RECEIVE FUNDS IN THE AMOUNT OF $588,900.00 FOR THE CONSTRUCTION OF A TRAFFIC SIGNAL AT THE INTERSECTION OF STATE HIGHWAY 158 AND SINCLAIR AVENUE IN EXCHANGE FOR ANNEXING AN AREA THAT INCLUDES THE INTERSECTION OF COUNTY ROAD 120 AND ANTELOPE TRAIL AND MAINTAINING THE TRAFFIC SIGNAL AT THAT INTERSECTION (DISTRICT 4) (ENGINEERING SERVICES) (STRENGTHEN AND SUSTAIN OUR INFRASTRUCTURE)**

Purpose:

Motion authorizing the execution of an Interlocal Agreement with Midland County regarding traffic signals at the State Highway 158 and Sinclair Avenue intersection, the annexation of an area in Midland County, Texas that includes the intersection of County Road 120 and Antelope Trail, and for the City of Midland to then maintain the traffic signals installed by Midland County at that intersection

Recommended City Council Action:

Approve

Fiscal Impact:

City of Midland to receive funds in the amount of $588,900.00 from Midland County

Strategic Priority:

(Strengthen and Sustain our Infrastructure)

Discussion:

The City of Midland plans to install traffic signals at the intersection of State Highway 158 and Sinclair Avenue, and Midland County desires to contribute funds in the amount of $588,900.00 to the project. In addition, Midland County and the City of Midland desire for the City to annex an area in Midland County, Texas that includes the intersection of County Road 120 and Antelope Trail, and for the City to then maintain the traffic signal installed by Midland County at that intersection.

City Manager's Office

Interlocal Agreement Regarding Traffic Signals
between
the City of Midland, Texas
and
Midland County, Texas

This Interlocal Agreement (the "***ILA***") is entered into this _____ day of _____, 2024 (the "***Effective Date***"), by and between the CITY OF MIDLAND, TEXAS ("***City***"), a home-rule municipal corporation, and MIDLAND COUNTY, TEXAS ("***County***"). In this ILA, City and County are sometimes individually referred to as a "***Party***" and collectively referred to as the "***Parties***."

WHEREAS, City desires to construct a traffic signal at the intersection of State Highway 158 and Sinclair Avenue (the "***Project***"); and

WHEREAS, County desires to contribute funds to City for the Project; and

WHEREAS, County and City desire for City to annex an area in Midland County, Texas that includes the intersection of County Road 120 and Antelope Trail, and for City to then maintain the traffic signal installed to be installed by Midland County at that intersection; and

WHEREAS, Texas Local Government Code § 51.076(a) authorizes City to hold property received by gift, deed, devise, or other manner; and

WHEREAS, the Parties desire to enter into this ILA to set forth the Parties' respective rights, obligations, and undertakings regarding the Project; and

WHEREAS, this Agreement is entered into pursuant to Chapter 791 of the Texas Government Code.

NOW, THEREFORE, in consideration of the covenants and conditions stated herein, and in consideration of the mutual benefits that will accrue to the Parties, the Parties have agreed and do hereby agree as follows:

A. **Purpose.** The purpose of this ILA is to set forth the terms and conditions governing County's payment to City of the sum of Five Hundred Eighty-Eight Thousand Nine Hundred and No/100 Dollars ($588,900.00) (the "***Funds***") as consideration for City's completion of the Project, and for City's agreement to annex an area that includes the intersection of County Road 120 and Antelope Trail and after the annexation to maintain the traffic signal to be installed by County at that intersection. The improvements that comprise the Project are generally described in **Exhibit A**, which is attached hereto and incorporated herein for all purposes.

B. **Terms and Conditions.** The Parties expressly agree to the following terms and conditions:

1. Request for Bids. City shall issue a request for bids for the Project. Notwithstanding the foregoing or any contrary provision contained herein, the provisions of this Section shall not be interpreted to (i) require that City issue a request for bids on or by a particular date or (ii) require that City accept or reject any bid in response to a request for bids for the Project. This Section merely addresses the administrative requirements that must be observed by City prior to executing a construction contract for the Project.

2. Construction Contract. Following issuance of a request for bids and the opening of the bids for the Project, City's staff shall review the submitted bids and make a recommendation to the Midland City Council (the "***City Council***") regarding whether to award a construction contract (the "***Contract***") to the lowest responsible bidder. If the City Council, in its sole and absolute discretion, chooses to award the Contract to the lowest responsible bidder, City shall use commercially reasonable efforts to enter the Contract with said bidder.

3. Project Construction. As consideration for County's payment of the Funds to City, City shall use commercially reasonable efforts to cause the Project to be planned, designed, and constructed in substantial accordance with the Project description contained in **Exhibit A**. City shall have the exclusive right to manage and supervise construction activities and related work for the Project.

4. Annexation. As further consideration for County's payment of the Funds to City, City will annex an area that includes the intersection of County Road 120 and Antelope Trail in Midland County, Texas and begin maintenance of the traffic signal to be installed at that intersection. County will not pay to City the Funds until after the annexation has been completed.

5. Project Completion and Certification. Upon City's completion of the Project, City shall issue written certification of the Project's completion to County.

6. Payment of Funds to City. Within thirty (30) days following County's receipt of the written certification prescribed by Section B.5, County shall pay to City the Funds; provided, however, that if City has not satisfied its annexation obligation set out in Section B.4 as of the date on which County receives the written certification, then within thirty (30) days following City's satisfaction of its annexation obligation set out in Section B.4, County shall pay to City the Funds.

7. Term. This ILA becomes effective on the Effective Date and shall terminate: (i) upon City's receipt of County's payment of the Funds; (ii) upon the mutual written agreement of the Parties to terminate this ILA; or (iii) as set forth in Section B.10.

8. Project Costs. Notwithstanding County's obligation to pay the Funds to City, all costs associated with the Project shall be the responsibility of City. Nothing in this ILA shall be construed or interpreted to obligate County to pay any amount in excess of the Funds.

9. Reporting. Upon City's receipt of a written request from County, City shall provide County with a written or oral report, as City deems appropriate, regarding the status of the Project's construction and expected completion date. Such report shall be provided to County no later than ten (10) business days following City's receipt of County's written request for the report.

10. Termination for Cause. This ILA shall automatically terminate without liability to either Party if City fails to execute the Contract by December 31, 2026. Additionally, this ILA may be terminated upon a Party's default for failure to satisfy a material term, condition, or covenant contained in this ILA if such Party fails to cure the same within thirty (30) days following its receipt of written notice of the default from the non-defaulting Party. If such default cannot reasonably be cured within such 30-day period, then the non-defaulting Party may not terminate this ILA if the defaulting Party commences such cure within such 30-day period and diligently pursues the same thereafter.

11. No Fault Termination. Either party may terminate this agreement at any time upon thirty (30) days advance written notice to the other party prior to the commencement of project construction.

C. General Terms.

1. Entire Agreement. This ILA constitutes the entire agreement between the Parties and shall not be explained, modified, or contradicted by any prior or contemporaneous negotiations, representations, or agreements, either written or oral. Only a subsequent, written agreement can modify this ILA.

2. Assignment. A Party shall not, either directly or indirectly, assign all or any part of this ILA or any interest, right, or privilege herein, without the prior written consent of the other Party, the granting of which shall be in the other Party's sole discretion.

3. Notices. Any notice to a Party required under this ILA shall be sent by certified U.S. mail, postage prepaid, addressed to such Party at the applicable address shown in this Section. A notice shall be deemed to have been given on the date when it was deposited in the mail, unless otherwise provided herein. Either Party may change such Party's address by sending written notice thereof to the other Party.

If to City:	*If to County:*
City of Midland	_____
Attn: City Manager	_____
300 N. Loraine St., Suite 310	_____
Midland, Texas 79701	_____

4. No Third-Party Beneficiary. The Parties' approval of this ILA does not create a third-party beneficiary. There is no third-party beneficiary to this ILA. No person

or entity who is not a party to this ILA shall be considered a third-party beneficiary or have any rights hereunder.

5. Legal Relationship. The Parties are not, and shall not be considered as, joint venturers, partners, or agents of each other; neither Party shall have the power to bind nor obligate the other, except as set forth in this ILA. The Parties agree not to represent to anyone that they are agents of one another or have any authority to act on behalf of one another. Nothing in this ILA is intended or shall be construed as in any way creating or establishing any partnership, joint venture, or agency between City and County. Further, nothing in this ILA is intended or shall be construed as creating a "community of pecuniary interest" or "an equal right of control" that would give rise to vicarious liability.

6. Consideration. The Parties hereby agree and acknowledge that this ILA is supported by good and valuable consideration, the receipt and sufficiency of which is hereby acknowledged by the Parties.

7. Payments from Current Revenues. Any payments due under this ILA by any Party shall be made from current revenues of the paying Party.

8. Governing Law & Venue. This ILA shall be governed by the laws of the State of Texas. Exclusive venue for any claims, suits or any other action arising from or connected in any way to this ILA or the performance of this ILA shall be in Midland County, Texas.

9. Waiver of Attorney Fees. **THE PARTIES AGREE TO WAIVE AND DO HEREBY WAIVE ANY CLAIM EACH PARTY HAS OR MAY HAVE IN THE FUTURE AGAINST THE OTHER PARTY REGARDING THE AWARD OF ATTORNEY FEES THAT IS IN ANY WAY RELATED TO THIS ILA, OR THE CONSTRUCTION, INTERPRETATION OR BREACH OF THIS ILA. THE PARTIES AGREE THAT IF A PARTY BRINGS OR COMMENCES ANY LEGAL ACTION OR PROCEEDING RELATED TO THIS ILA, THE CONSTRUCTION, INTERPRETATION, VALIDITY OR BREACH OF THIS ILA, INCLUDING BUT NOT LIMITED TO ANY ACTION PURSUANT TO THE PROVISIONS OF THE TEXAS UNIFORM DECLARATORY JUDGMENTS ACT (TEXAS CIVIL PRACTICE AND REMEDIES CODE SECTION 37.001, ET SEQ., AS AMENDED) OR CHAPTER 271 OF THE TEXAS LOCAL GOVERNMENT CODE, AS AMENDED, THAT SAID PARTY AGREES TO WAIVE AND RELINQUISH ANY AND ALL RIGHTS TO THE RECOVERY OF ATTORNEY FEES TO WHICH IT MIGHT OTHERWISE BE ENTITLED. THE PROVISIONS OF THIS SECTION SHALL SURVIVE THE TERMINATION OF THIS ILA.**

10. Force Majeure. If City is delayed, hindered in, or prevented from the performance of any act required hereunder by reason of an act of God, strike, lockout, labor trouble, inability to procure materials, unseasonable weather affecting construction

or operation, failure of power, riot, insurrection, pandemic, or war, then performance of such act shall be excused for the delay period and any applicable deadline shall be extended for a period equal to the delay period.

11. Immunity. It is expressly understood and agreed that no provision of this agreement is any way intended to constitute a waiver by either party of any immunity from suit or liability.

[Signature pages follow]

CITY OF MIDLAND, TEXAS

_____
Tommy Gonzalez, City Manager

ATTEST:

_____
Marcia Bentley-German, City Secretary

APPROVED AS TO FORM ONLY

_____
John Ohnemiller, City Attorney

MIDLAND COUNTY, TEXAS

By: _____
Name: TERRY JOHNSON
Title: MIDLAND COUNTY JUDGE

ATTEST:

_____
Alison Haley, Midland County Clerk

APPROVED AS TO FORM ONLY

_____
Russell Malm, County Attorney

EXHIBIT A
Project Description

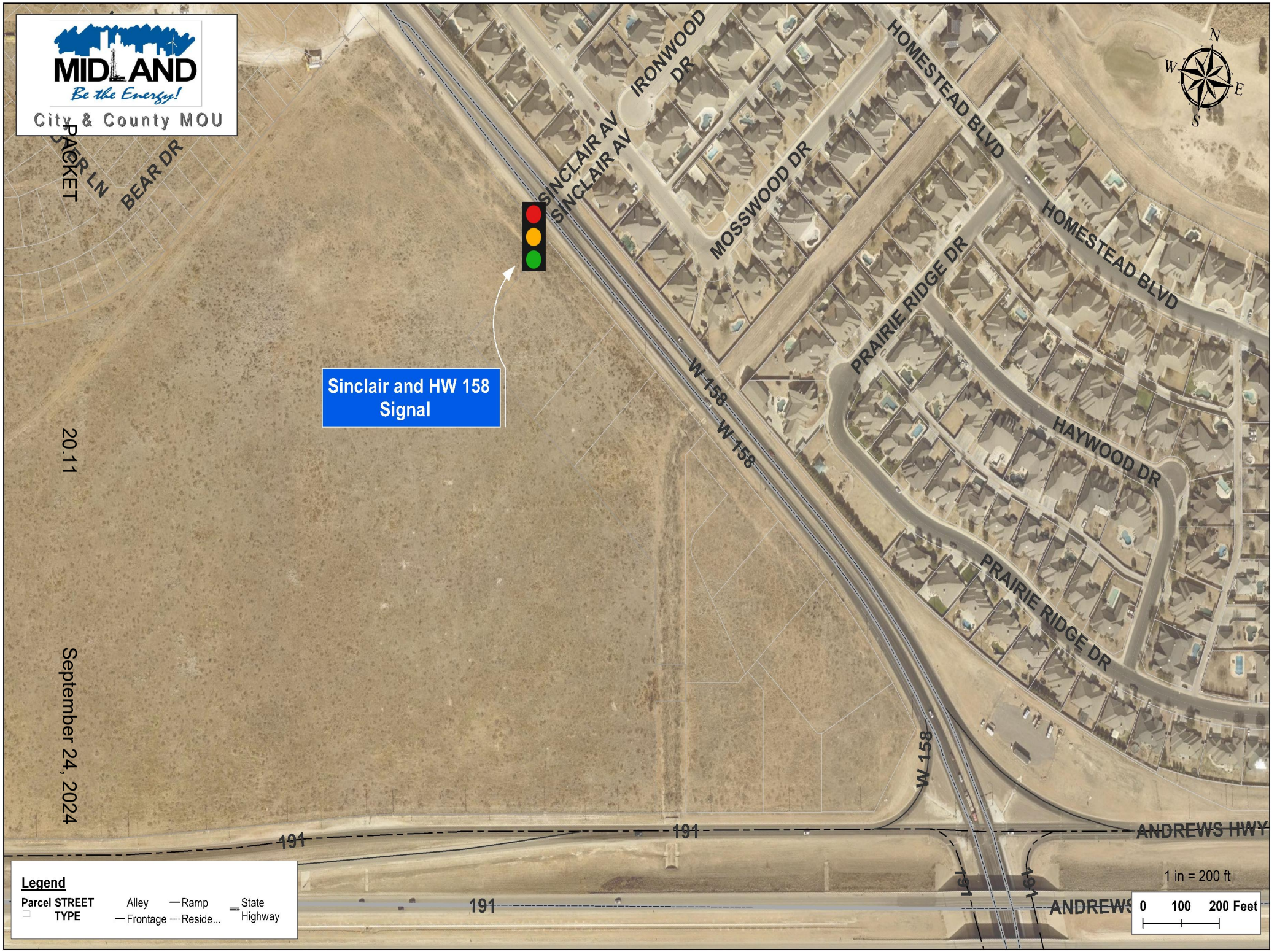
MIDLAND
Be the Energy!
City & County MOU
PACKET
PAER LN
BEAR DR
SINCLAIR AV
SINCLAIR AV
IRONWOOD DR
MOSSWOOD DR
HOMESTEAD BLVD
HOMESTEAD BLVD
PRAIRIE RIDGE DR
PRAIRIE RIDGE DR
HAYWOOD DR
W 158
W 158
W 158
Sinclair and HW 158 Signal
20.11
September 24, 2024
191
191
191
191
191
ANDREWS HWY
ANDREWS
N
W
E
S
1 in = 200 ft
0 100 200 Feet
Legend
Parcel STREET TYPE
Alley
Frontage
Ramp
Reside...
State Highway

City Council Meeting

Item Number: 21

Meeting Date: September 24, 2024

To: City Council / City Manager

From: Greg Snow,

Subject: **RESOLUTION ACCEPTING A FISCAL YEAR 2024 GRANT AWARD FROM THE SOUTHWEST BORDER HIGH INTENSITY DRUG TRAFFICKING AREAS PROGRAM IN THE AMOUNT OF $196,094.00 SAID GRANT SHALL BE USED TO ENHANCE AND COORDINATE DRUG CONTROL EFFORTS AMONG FEDERAL, STATE, AND LOCAL LAW ENFORCEMENT AGENCIES; AND APPROPRIATING SAID GRANT FUNDS (DISTRICT: ALL) (POLICE) (SET THE STANDARD FOR A SAFE AND SECURE CITY)**

Purpose:

Authorize a resolution to accept the Fiscal Year 2024 H.I.D.T.A. grant in the amount of $196,094.00 from the West Texas High Intensity Drug Trafficking Area Program.

Recommended City Council Action:

Approve

Fiscal Impact:

$196,094.00 will be appropriated from the General Fund unappropriated Fund balance and transferred to a grant project.

Strategic Priority:

(Set the Standard for a Safe and Secure City)

Discussion:

The purpose of the Hight Intensity Drug Trafficking Area (HIDTA) Program, as authorized by the Anti-Drug Act of 1988, is to enhance and coordinate drug control efforts among federal,

state and local law enforcement agencies. The program provides participating agencies with resources in the way of technology, equipment, and funding in order to more effectively combat drug trafficking operations extended throughout the West Texas region and beyond. The Midland Police Department has been an active participant in the West Texas Region - Southwest Border HIDTA since August of 2008.

Morris William Jr.

City Manager's Office

RESOLUTION NO. _____

RESOLUTION ACCEPTING A FISCAL YEAR 2024 GRANT AWARD FROM THE SOUTHWEST BORDER HIGH INTENSITY DRUG TRAFFICKING AREAS PROGRAM IN THE AMOUNT OF $196,094.00; SAID GRANT SHALL BE USED TO ENHANCE AND COORDINATE DRUG CONTROL EFFORTS AMONG FEDERAL, STATE, AND LOCAL LAW ENFORCEMENT AGENCIES; AND APPROPRIATING SAID GRANT FUNDS

WHEREAS, the City of Midland, Texas, has submitted a grant application to the Southwest Border High Intensity Drug Trafficking Areas (HIDTA) program to enhance and coordinate drug control efforts among federal, state, and local law enforcement agencies; and

WHEREAS, the Southwest Border HIDTA program provides agencies with resources in the way of technology, equipment, and funding in order to better combat drug trafficking; and

WHEREAS, the City of Midland, Texas, has been awarded $196,094.00 from the Southwest Border HIDTA program to be used for the purpose of enhancing and coordinating drug control efforts among federal, state, and local law enforcement agencies to better combat drug trafficking; and

WHEREAS, the City Council finds it to be in the public interest to accept said grant award;

NOW, THEREFORE, BE IT RESOLVED BY THE CITY COUNCIL OF THE CITY OF MIDLAND, TEXAS:

SECTION ONE. That the City of Midland, Texas, acting through its Mayor and City Council, hereby accepts the HIDTA grant of $196,094.00 to be used for the purpose of enhancing and coordinating drug control efforts among federal, state, and local law enforcement agencies to better combat drug trafficking.

SECTION TWO. That the City Manager, Director of Finance, and Interim Chief of Police of the City of Midland, Texas, are hereby authorized and directed to evidence the City of Midland's acceptance by executing all necessary documents for the acceptance of said

grant award.

SECTION THREE. That the amount of $196,094.00 is hereby appropriated from the General Fund unappropriated fund balance and transferred to a grant project established by the City of Midland Finance Department for purposes consistent with this Resolution.

On motion of Council member _____, seconded by Council member _____, the above and foregoing resolution was adopted by the City Council of the City of Midland at a regular meeting on the _____ day of _____, A.D., 2024, by the following vote:

Council members voting "AYE":

Council members voting "NAY":

_____
Lori Merritt Blong, Mayor

ATTEST:

_____
Marcia Bentley-German, City Secretary

RECOMMENDED AND APPROVED:

_____
Tommy Gonzalez, City Manager

APPROVED AS TO CONTENT
AND COMPLETENESS:

_____
Christy Weakland, Director of Finance

APPROVED AS TO FORM ONLY:

_____
John Ohnemiller, City Attorney

City Council Meeting

Item Number: 22

Meeting Date: September 10, 2024, September 24, 2024

To: City Council / City Manager

From: Daniel Humbert, Senior Planner

Subject: AN ORDINANCE GRANTING A SPECIAL EXCEPTION FOR A 1.51-ACRE TRACT OF LAND OUT OF THE SOUTHEAST QUARTER OF SECTION 7, BLOCK X, H.P. HILLIARD SURVEY, CITY AND COUNTY OF MIDLAND, TEXAS (GENERALLY LOCATED ON THE NORTH SIDE OF MOCKINGBIRD LANE, APPROXIMATELY 800 FEET WEST OF NORTH MIDLAND DRIVE), BY PERMITTING A REDUCED MINIMUM LOT AREA; CONTAINING A CUMULATIVE CLAUSE; CONTAINING A SAVINGS AND SEVERABILITY CLAUSE; PROVIDING FOR A MAXIMUM PENALTY OR FINE OF TWO THOUSAND DOLLARS ($2,000.00); ORDERING RECORDATION BY THE CITY SECRETARY IN THE DEED RECORDS OF MIDLAND COUNTY, TEXAS; AND ORDERING PUBLICATION (DISTRICT 4) (DEVELOPMENT SERVICES) (QUALITY OF LIFE AND PLACE)

Purpose:

Maverick Engineering, on behalf of Mattisyn Swierc Henderson, is requesting a Special Exception from the City of Midland Zoning Ordinance, Section 5.04 – Residential Zoning District Dimensional Regulations Chart, to permit a permit a reduced minimum lot area for a property located on Mockingbird Land for the development of a residence.

Recommended City Council Action:

Approval

Fiscal Impact:

No City funds are required to process this request.

Discussion:

The subject property is zoned AE, Agricultural Estate District. Per Section 5.04 – Residential

Zoning District Dimensional Regulations Chart, the minimum lot area is two (2) acres in the AE, Agricultural Estate District. The applicant is requesting to reduce this minimum lot area to one and half (1.5) acre to allow for the development of a residence.

This request has been circulated to all pertinent City departments for review. Below are the departments' comments.

Fire: (Approved)

No objections to zoning.

Building: (Approved)

No objection.

Engineering: (Approved)

No objection. [For Applicant's Information Only.]

Oil and Gas: (Approved)

No Oil and Gas issues.

Transportation: (Approved)

No objection. [For the Applicant's information only.]

Planning (Approved):

The minimum lot area regulation creates a hardship for this property as this existing property does not meet the minimum dimensions and would be prevented from being developed. Granting this exception would alleviate the hardship and allow the property owner to construct their home.

Staff recommends approval of this request.

Letters of Objection:

Staff has not received any letters of objection as of September 6, 2024.

Attachments:

Survey
Application
Maps
Aerial Photo
PowerPoint Presentation

City Manager's Office

ORDINANCE NO. _____

AN ORDINANCE GRANTING A SPECIAL EXCEPTION FOR A 1.51-ACRE TRACT OF LAND OUT OF THE SOUTHEAST QUARTER OF SECTION 7, BLOCK X, H.P. HILLIARD SURVEY, CITY AND COUNTY OF MIDLAND, TEXAS (GENERALLY LOCATED ON THE NORTH SIDE OF MOCKINGBIRD LANE, APPROXIMATELY 800 FEET WEST OF NORTH MIDLAND DRIVE), BY PERMITTING A REDUCED MINIMUM LOT AREA; CONTAINING A CUMULATIVE CLAUSE; CONTAINING A SAVINGS AND SEVERABILITY CLAUSE; PROVIDING FOR A MAXIMUM PENALTY OR FINE OF TWO THOUSAND DOLLARS ($2,000.00); ORDERING RECORDATION BY THE CITY SECRETARY IN THE DEED RECORDS OF MIDLAND COUNTY, TEXAS; AND ORDERING PUBLICATION

WHEREAS, the City Council modified the authority of the Board of Adjustment in Title XI, Chapter 1, Section 7 ("Section 11-1-7") of the Midland City Code; and

WHEREAS, the Council finds that satisfactory evidence has been presented that the exceptions to the Midland Zoning Ordinance and

WHEREAS, the Council finds that it is clearly and specifically authorized by the health, safety, comfort and welfare of the occupants of the land area near the tract on which

terms of Section 11-1-7 to grant such a special exception, and said exception will be in

WHEREAS, after a full and fair public hearing at which all parties in interest were

harmony with the general purposes and intent of the zoning provisions of the Midland City

offered an opportunity to be heard, all pursuant to law, the Council finds it to be in the public

Code; and

NOW, THEREFORE, BE IT ORDAINED BY THE CITY COUNCIL OF THE

interest to grant a special exception to the Zoning Ordinance, pursuant to Section 11-1-7, for

the purposes herein stated, subject to special conditions;

CITY OF MIDLAND, TEXAS:

SECTION ONE. That a special exception is hereby granted for the property

SECTION FOUR. If any section, subsection, sentence, clause or phrase of this

described as a 1.51-acre tract of land out of the southeast quarter of Section 7, Block X, H.P.

ordinance is, for any reason, held to be unconstitutional or invalid, such holding shall not

Hilliard Survey, City and County of Midland, Texas (the "Property"), said Property being

affect the validity of the remaining portions of this ordinance. The Council of the City of

That the minimum lot area of any lot on the Property shall be 1.51

more fully described in Exhibit "A", which is attached hereto and incorporated herein. Said

acres.

SECTION THREE. The provisions of this ordinance are to be cumulative of all Midland hereby declares that it would have passed this ordinance and each section,

special exception shall allow a reduced minimum lot area on the Property.

other ordinances or parts of ordinances governing or regulating the same subject matter as

subsection, sentence, clause, or phrase hereof irrespective of the fact that any one or more

SECTION TWO. Said special exception is subject to the following special

that covered herein; provided, however, that all prior ordinances or parts of ordinances

conditions:

sections, subsections, sentences, clauses, or phrases be declared unconstitutional or invalid.

inconsistent with or in conflict with any of the provisions of this ordinance are hereby

SECTION FIVE. The penalty for violation of this ordinance shall be in accordance

expressly repealed to the extent of any such inconsistency or conflict.

with the general penalty provisions contained in Section 1-3-1 of the City Code of Midland,

Texas, which provides for a fine not exceeding two thousand dollars ($2,000.00).

SECTION SIX. The City Secretary is hereby authorized and directed to file this

ordinance with the Office of the County Clerk for purposes of recordation.

SECTION SEVEN. The City Secretary is hereby authorized and directed to publish

the descriptive caption of this ordinance in the manner and for the length of time prescribed by the law as an alternative method of publication.

The above and foregoing ordinance was duly proposed, read in full and adopted on

first reading, the _____ day of _____, A.D., 2024; and passed to second reading

Council members voting "AYE":

on motion of Council member _____, seconded by Council member

Council members voting "NAY":

_____, by the following vote:

The above and foregoing ordinance was read in full and finally adopted by the

following vote upon motion of Council member _____, seconded by Council

Council members voting "AYE":

member _____, on the _____ day of _____, A.D., 2024, at a regular

Council members voting "NAY":

meeting of the City Council:

PASSED AND APPROVED THIS _____ day of _____, A.D., 2024.

_____

Lori Merritt Blong, Mayor

ATTEST:

_____

Marcia Bentley-German, City Secretary

APPROVED AS TO CONTENT

AND COMPLETENESS:

_____
Elizabeth Triggs, Planning and Development Officer

APPROVED ONLY AS TO FORM:

_____

John Ohnemiller, City Attorney

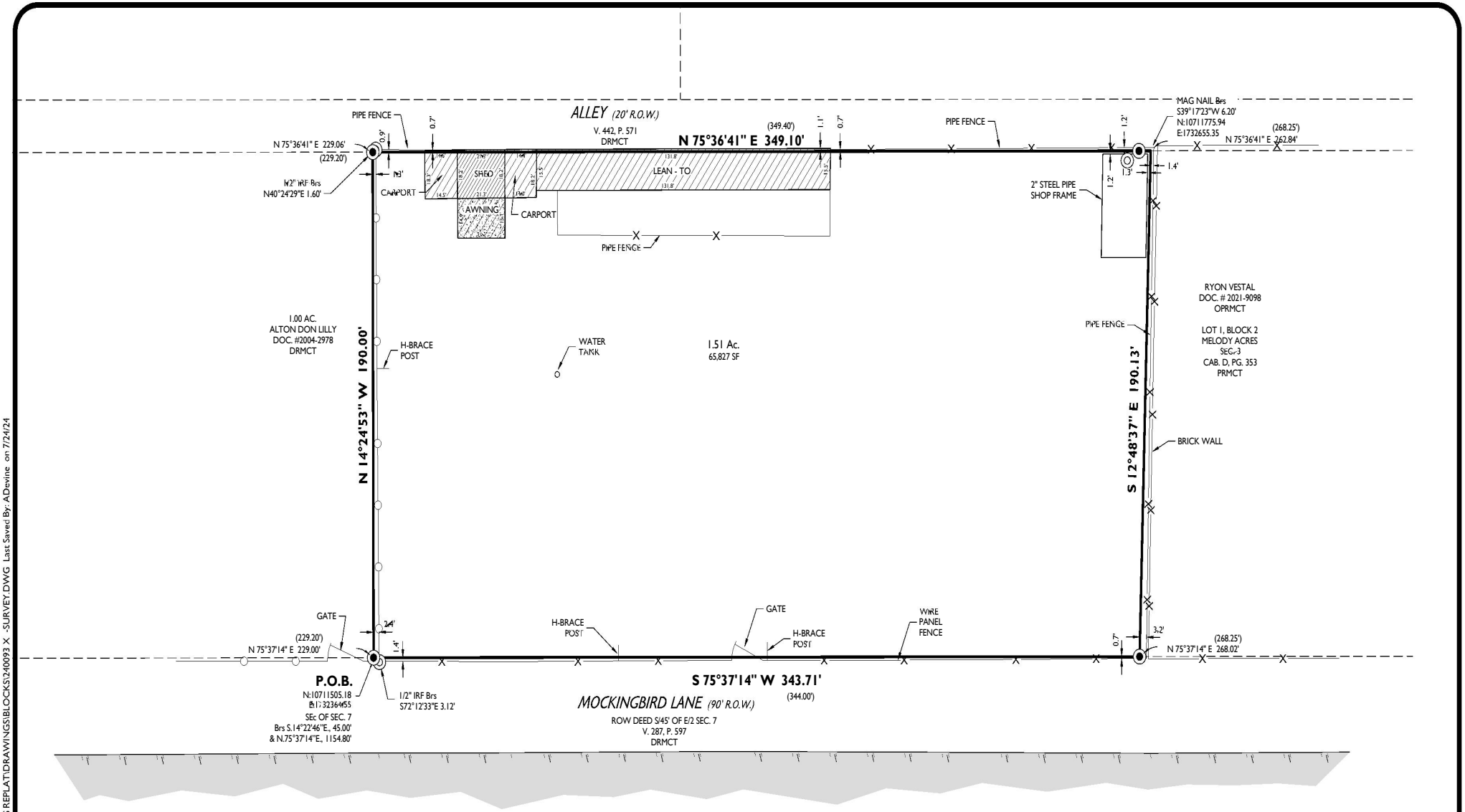

MAVERICK
CIVIL ENGINEERING / LAND SURVEYING
1909 West Wall Street, Suite "K"
Midland, Texas 79701
ENGINEER FIRM #: F-15089
SURVEY FIRM #: 10194514
Tel: (432) 262-0999 Fax: (432) 262-0989
www.Maverick-Eng.com

JOB NO.:	FIELD WORK:	DRAWN BY:	REV 1:	REV 2:
240093	-	AD		

LEGEND

DENOTES BOUNDARY LINE

DENOTES EXISTING PROPERTY LINES

0' 40' 80'

ORIGINAL SCALE: 1" = 40'

SITE PLAN FOR SPECIAL EXCEPTION APPLICATION

BEING A 1.51-ACRE TRACT OF LAND IN SECTION 7, BLOCK X, H. P. HILLIARD SURVEY, CITY AND COUNTY OF MIDLAND, TEXAS.

EXHIBIT "A"

Drawing: F:\2024\240093-SIGNATURE HOMES-MELODY ACRES REPLAT\DRAWINGS\BLOCKS\240093 X -SURVEY.DWG Last Saved By: ADevine on 7/24/24

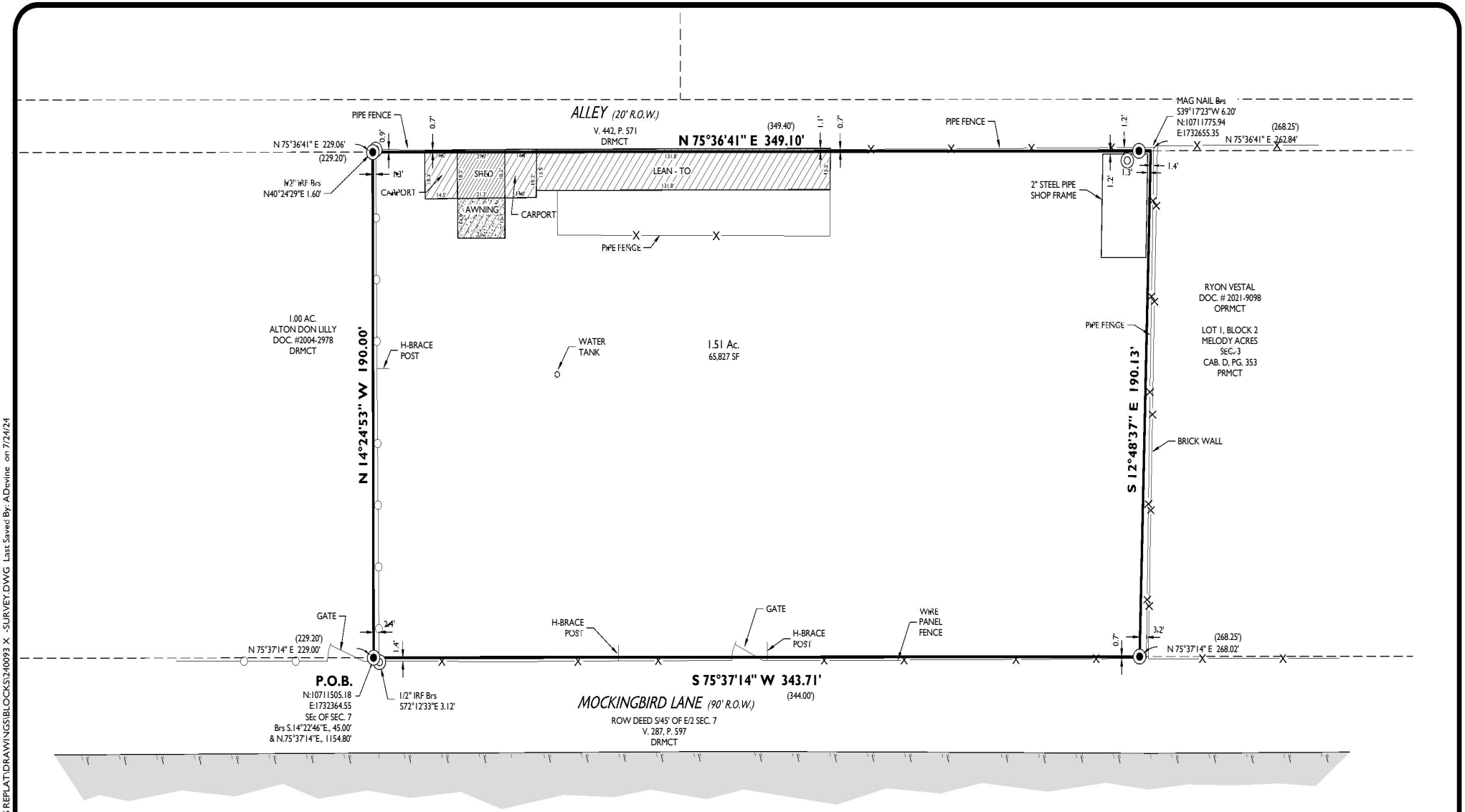

M A V E R I C K
CIVIL ENGINEERING / LAND SURVEYING
1909 West Wall Street, Suite "K"
Midland, Texas 79701
ENGINEER FIRM #: F-15089
SURVEY FIRM #: 10194514
Tel: (432) 262-0999 Fax: (432) 262-0989
www.Maverick-Eng.com

JOB NO.:	FIELD WORK:	DRAWN BY:	REV 1:	REV 2:
240093	-	AD		

LEGEND

DENOTES BOUNDARY LINE

DENOTES EXISTING PROPERTY LINES

N W E S

0' 40' 80'

ORIGINAL SCALE: 1" = 40'

SITE PLAN FOR SPECIAL EXCEPTION APPLICATION

BEING A 1.51-ACRE TRACT OF LAND IN SECTION 7, BLOCK X, H. P. HILLIARD SURVEY, CITY AND COUNTY OF MIDLAND, TEXAS.

Drawing: F:\2024\240093-SIGNATURE HOMES-MELODY ACRES REPLAT\DRAWINGS\BLOCKS\240093 X -SURVEY.DWG Last Saved By: ADevine on 7/24/24

Docusign Envelope ID: 1EB8E1AC-7A89-4AE4-8610-1C2F2F366315

MIDLAND Planning Division

Special Exception Application

Project Number:_____

Case Number:_____

Applicant *(if acting as Agent, see affidavit on page 2)* Printed Name: See owner		Phone ( ) Email	
Address	City	State	Zip

Property Owner Printed Name: Mattisyn Swierc Henderson		Phone (432) 296-0089 Email mattihenderson@yahoo.com	
Address 2504 Briaroaks Drive	City Midland	State TX	Zip 79707

Representative *(if different from Applicant or Property Owner)* Firm: MAVERICK ENGINEERING Printed Name: Paladin Huckaba		Phone (432) 262-0999 Email phuckaba@maverick-eng.com	
Address 1909 W. Wall Street Suite K	City Midland	State TX	Zip 79701

Street Address: NOT AVAILABLE

Legal Description 1.51 ACRE TRACT OF LAND SITUATED IN SECTION 7, BLOCK X, H.P. SURVEY, CITY AND COUNTY OF MIDLAND, TEXAS

Current Zoning: AE AGRICULTURAL ESTATES

This property qualifies as an exception to the City Code because:

- ☒ It is an expansion of a nonconforming use.
- ☐ There are existing nonconforming structures in the area.
- ☐ The addition of architectural or other projections of a minor extent.

Reason for Request: **APPLICANT IS SEEKING TO PLAT A 1.5 ACRE LOT WHICH IS LESS THAN THE REQUIRED 2 ACRE MINIMUM PER EXISTING ZONING OF AE**

Submittal and Fees

Items to be submitted with this application form:

- Application Fee – Payable to the 'City of Midland'
- Dimensioned Site Plan showing:
  - Parking
  - Building Footprint
- Digital Copies of Site Plan (PDF/JPEG)

Signatures	
Applicant (signature): See owner	Date:
Applicant (printed):	
Property Owner (signature): Signed by: Mattisyn Swierc Henderson	Date: 7/23/2024
Property Owner (printed): Mattisyn Swierc Henderson	

The Special Exception shall be considered officially received in the Planning office only when it has been submitted in full compliance with the provisions of Section 212 of the Texas Local Government Code and the Zoning Code of Ordinances of the City of Midland and when such required items for the application are also received.

All materials, including exhibits, submitted in support of an application, or displayed during a public hearing, shall remain the property of the City of Midland.

If an agent is authorized by the property owner to file and execute the application on behalf of the property owner, the agent must complete the affidavit below.

STATE OF TEXAS
COUNTY OF MIDLAND

Before me, the undersigned authority, on this day personally appeared Ashlee Devine who, being by me duly sworn, upon oath says: That (s)he is authorized by Mattisyn S. Henderson, the owner of the above described property, to fully represent him/her in this application and that (s)he had the legal right, power and authority to sign said owner's name hereto as his/her attorney in fact.

Ashlee Devine
Authorized Agent (*signature*)

Subscribed and sworn to before me, this 24th day of July, 20 24, to certify which witness my hand and seal of office.

SAVANNAH DAVIS
Notary Public, State of Texas
Comm. Expires 05-20-2028
Notary ID 134907724

NOTARY PUBLIC, MIDLAND COUNTY, TEXAS

FOR OFFICE USE ONLY	
☐ Property Owner Authorization	☐ Dimensioned Site Plan
☐ Application Fee	☐ Plans in Digital Format (PDF/JPEG)
Check #_____	
Received By:	Date:

****Application will not be considered for scheduling until reviewed by a planner.****

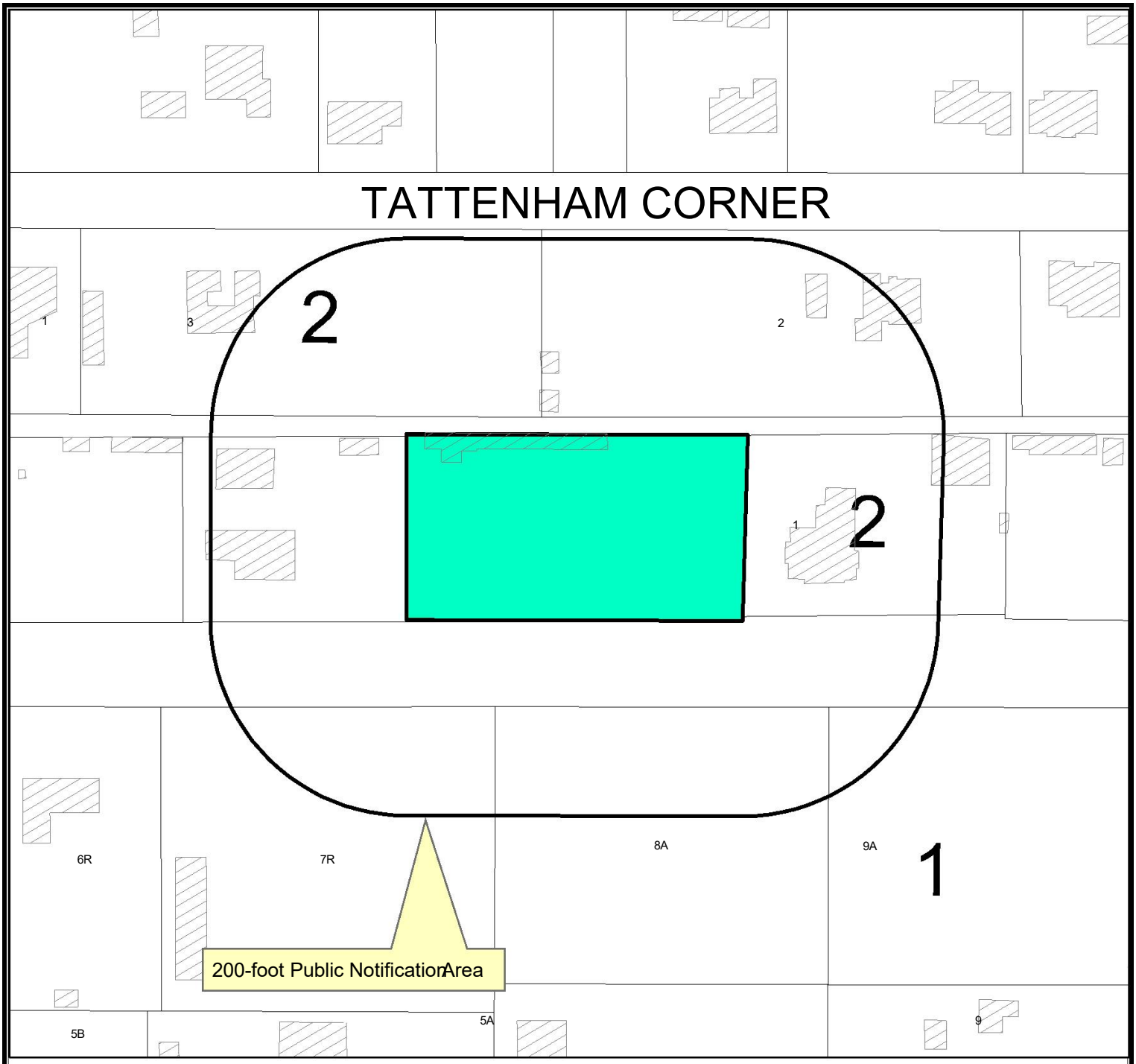

Location Map

E-24-0127 **Scale: 1" = 146'**

Consider a request by Maverick Engineering, on behalf of Mattisyn Swierc Henderson, for a Special Exception from the City of Midland Zoning Ordinance, Section 5.04 – Residential Zoning District Dimensional Regulations Chart, a 1.51-acre tract of land located in the southeast quarter of Section 7, Block X, H.P. Hilliard Survey, City and County of Midland, Texas.

Generally located on the north side of Mockingbird Lane, approximately 800 feet west of North Midland Drive. (Council District 4)

LEGEND

- CITY LIMITS
- PARCEL
- PRIVATE BLDGS

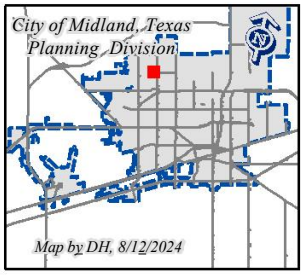

©THE CITY OF MIDLAND - 2021
THIS DATA IS NOT A SUBSTITUTION FOR A SURVEY AND NOR IS IT DESIGNED TO BE USED AS THE PRIMARY TOOL IN PERMITTING OR OTHER DECISIONS BASED SOLELY ON THE INFORMATION CONTAINED HEREIN.
THE CITY OF MIDLAND SHALL NOT BE RESPONSIBLE FOR ANY DECISIONS BASED UPON THE USE OF THIS DATA.

TATTENHAM CORNER

AE

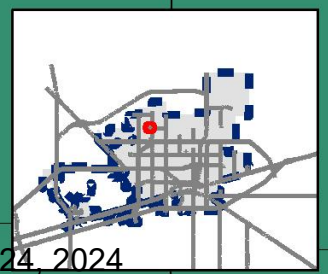

PACKET 22.13 September 24, 2024

Map DH, 8/12/2024

E-24-0127

Scale: 1" = 135'

ZONING MAP

© THE CITY OF MIDLAND - 2021: THIS DATA IS NOT A SUBSTITUTION FOR A SURVEY PRODUCT, NOR IS IT DESIGNED TO BE USED AS A PRIMARY TOOL IN PERMITTING OR OTHER DECISIONS BASED SOLELY ON THE INFORMATION CONTAINED HEREIN THE CITY OF MIDLAND SHALL NOT BE RESPONSIBLE FOR ANY DECISIONS BASED UPON THE USE OF THIS DATA

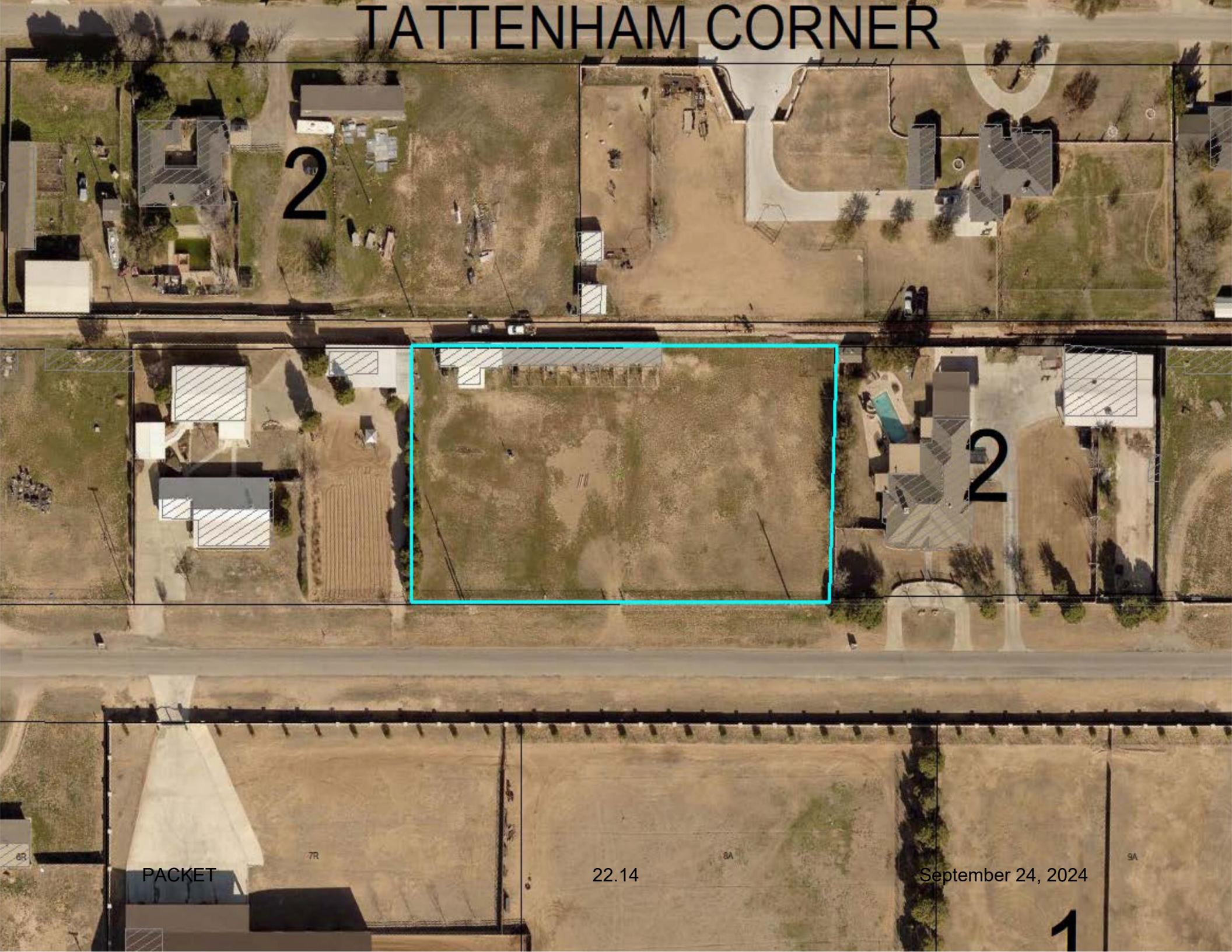
TATTENHAM CORNER
2
1
2
6R
7R
8A
9A
1


MIDLAND
Be the Energy!
Mattisyn Swierc Henderson
Special Exception
Visit Our Website
MIDLANDTEXAS.GOV

- Maverick Engineering, on behalf of Mattisyn Swierc Henderson
- Special Exception
- Located on Mockingbird Lane

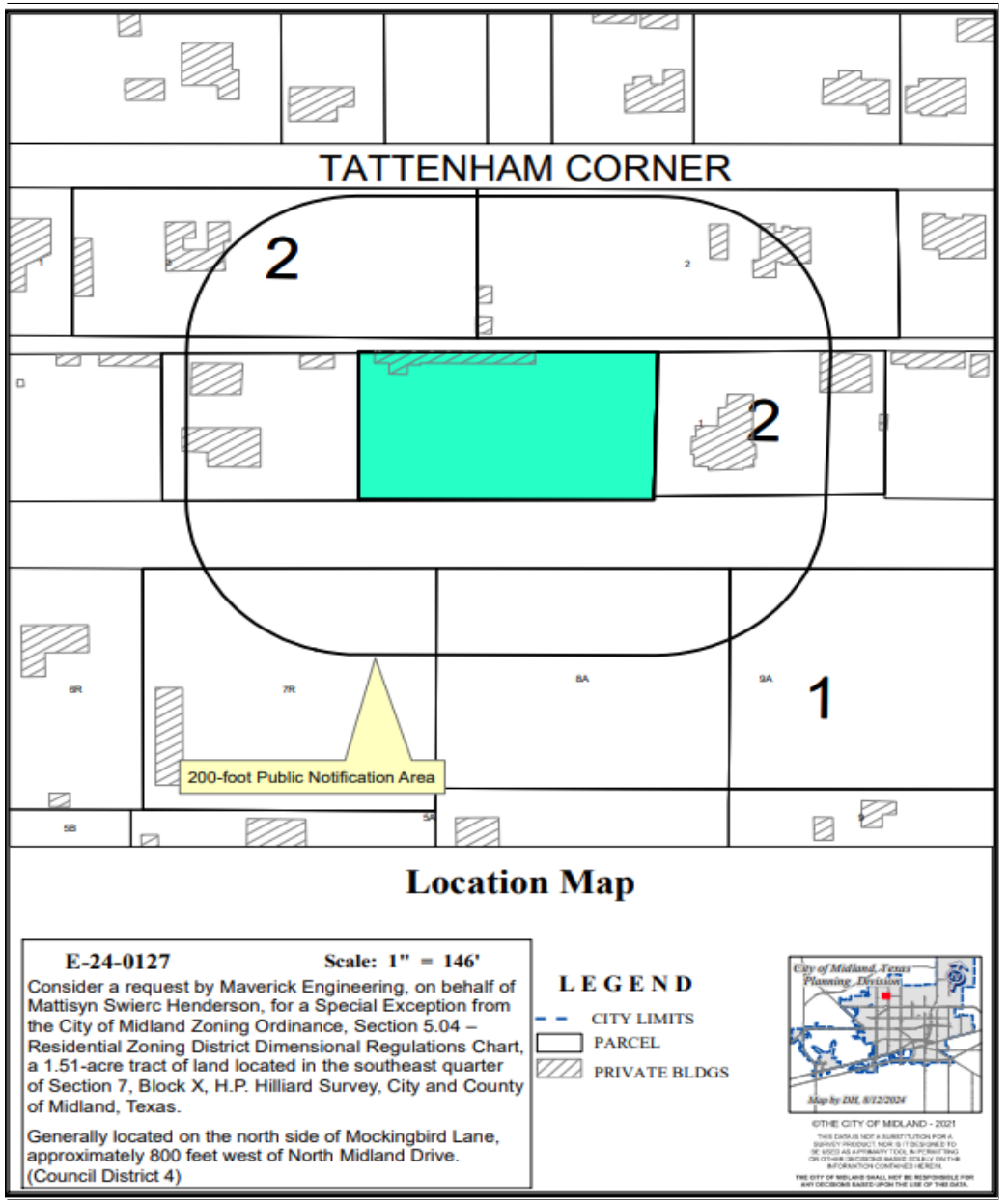

- Current use: Vacant lot
- Proposed Use: Residential dwelling



Currently Zoned:

- AE, Agricultural Estate District

Surrounding Zoning:

- AE, Agricultural Estate District

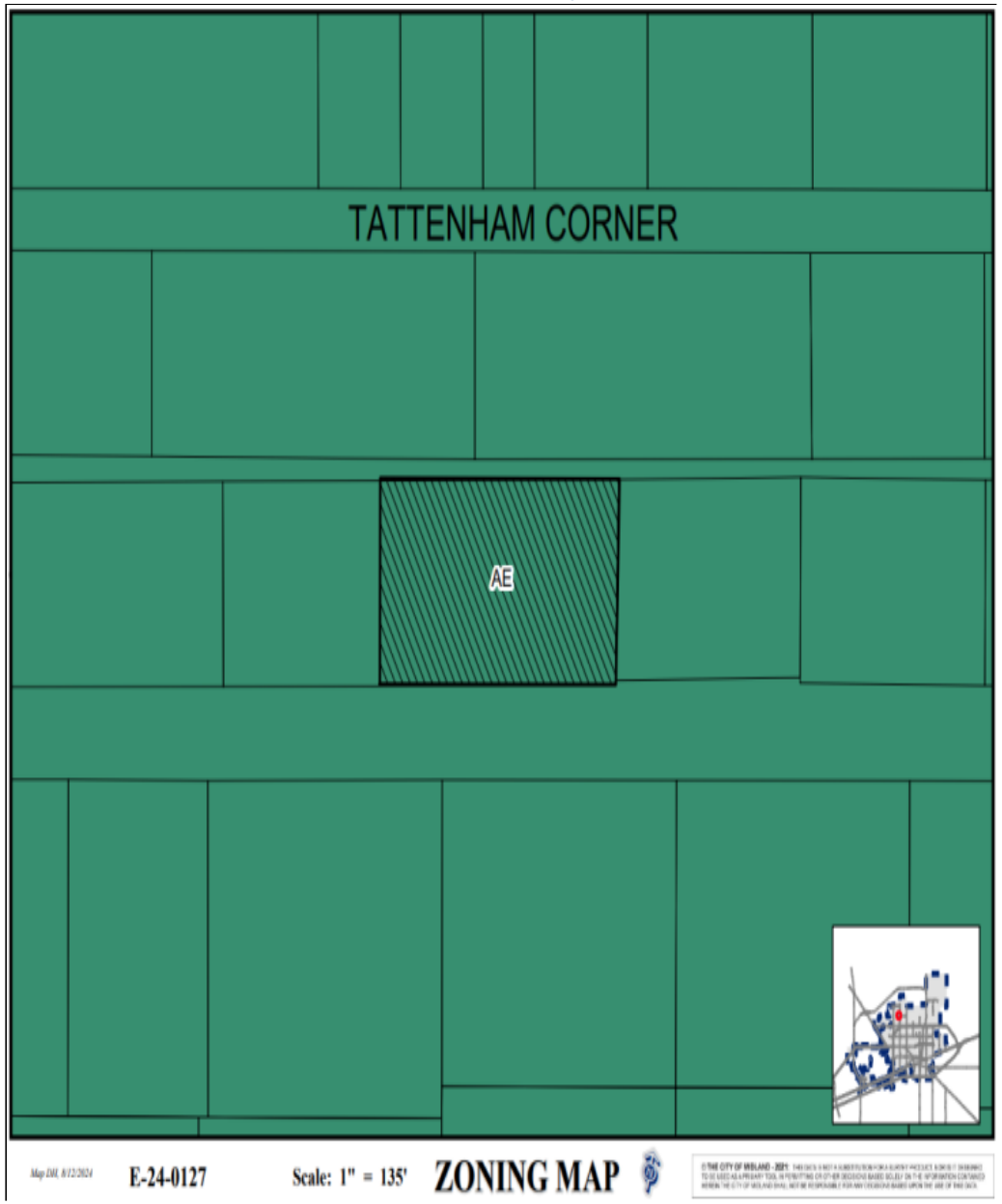

- Proposing a one-and-a-half-acre AE, Agricultural Estate District lot minimum requirement
- Agricultural Estate District lot minimum requirement is 2 acres
- Current parcel owned and available to be platted is 1.5 acres

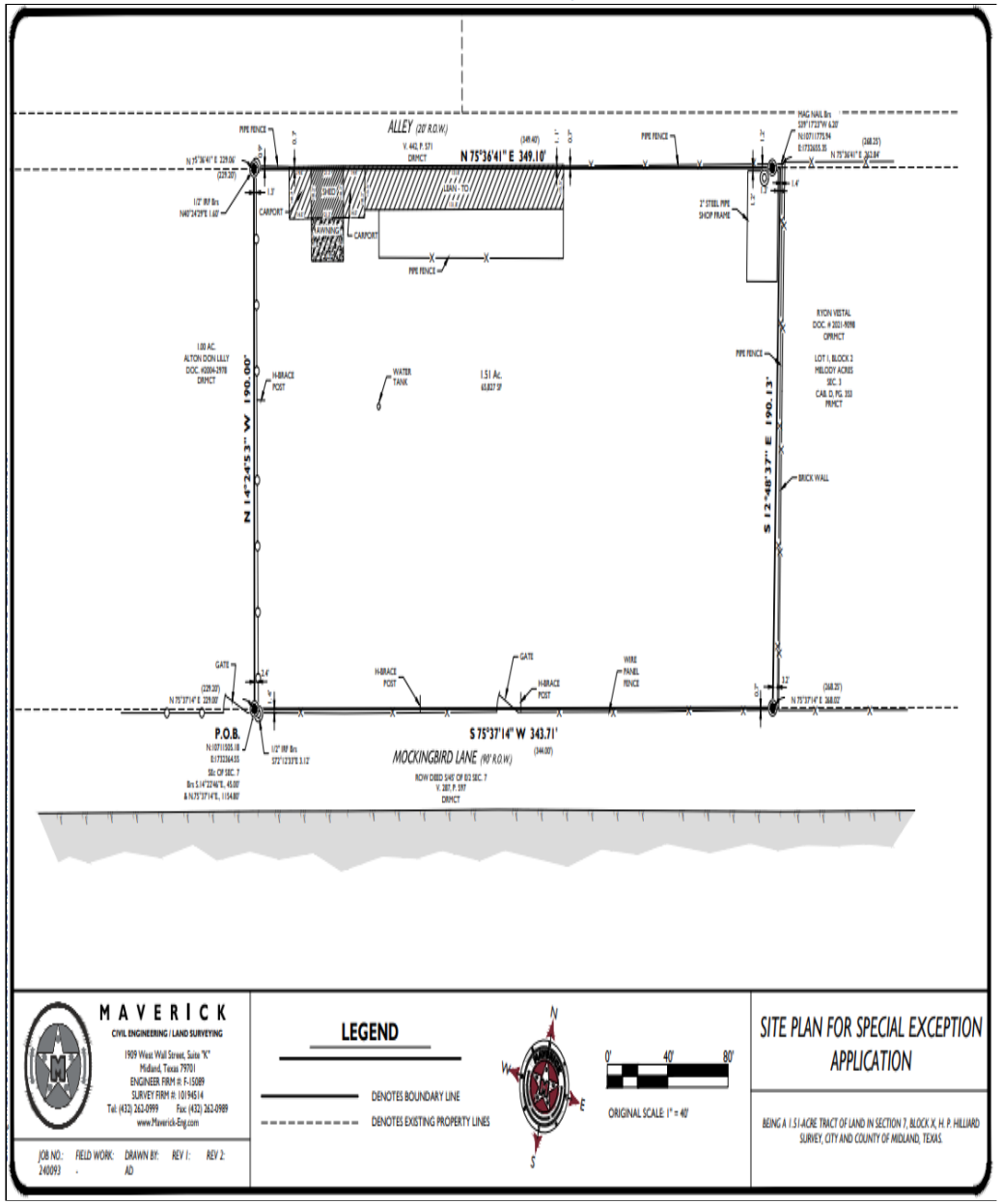

MIDLAND Be the Energy!



- Staff has not received any letters of objection as of September 6, 2024.

- Staff recommends approval of this request. However, should Council approve it, staff recommends that it be subject to conditions A and B.

Conditions:

A. That the minimum lot area shall be one and a half acres.

B. That the locations of all structures on the Property shall significantly conform to the site plan, which is attached hereto as Exhibit “A” and incorporated herein for all purposes.

MISSION

Deliver exceptional services and promote a high quality of life and place for ALL our citizens.



City Council Meeting

Item Number: 23

Meeting Date: September 10, 2024, September 24, 2024

To: City Council / City Manager

From: Daniel Humbert, Senior Planner

Subject: AN ORDINANCE AMENDING THE ZONING DISTRICT MAP OF THE CITY OF MIDLAND TO REZONE A 302.39-ACRE TRACT OF LAND OUT OF SECTION 18, BLOCK 38, T-1-S, T&P RR CO. SURVEY, CITY AND COUNTY OF MIDLAND, TEXAS, FROM SF-1, SINGLE-FAMILY DWELLING DISTRICT, IN PART, SF-2, SINGLE-FAMILY DWELLING DISTRICT, IN PART, SF-3, SINGLE-FAMILY DWELLING DISTRICT, IN PART, TH, TOWNHOUSE (ATTACHED) DWELLING DISTRICT, IN PART, 2F, TWO-FAMILY DWELLING (DUPLEX) DISTRICT, IN PART, MF-16, MULTIPLE-FAMILY DWELLING DISTRICT, IN PART, AND LR, LOCAL RETAIL DISTRICT, IN PART, TO PD, PLANNED DEVELOPMENT DISTRICT FOR A HOUSING DEVELOPMENT (GENERALLY LOCATED AT THE NORTHEAST CORNER OF THE INTERSECTION OF FAIRGROUNDS ROAD AND FIREWHEEL ROAD); CONTAINING A CUMULATIVE CLAUSE; CONTAINING A SAVINGS AND SEVERABILITY CLAUSE; PROVIDING FOR A MAXIMUM PENALTY OR FINE OF TWO THOUSAND DOLLARS ($2,000.00); AND ORDERING PUBLICATION (DISTRICT 1) (DEVELOPMENT SERVICES) (QUALITY OF LIFE AND PLACE)

Purpose:

Maverick Engineering, on behalf of Betenbough Homes LLC, is requesting a Zone Change from LR, Local Retail District, in part, TH, Townhouse (Attached) Dwelling District, in part, MF-16, Multiple-Family Dwelling District, in part, SF-3, Single-Family Dwelling District, in part, SF-2, Single-Family Dwelling District, in part, SF-1, Single-Family Dwelling District, in part, 2F, Two-Family Dwelling (Duplex) District, in part, to PD, Planned Development District for Housing Development to allow for the development of multi-use site including single family housing, cottage housing, and greenspace/detention.

Recommended City Council Action:

Approve

Fiscal Impact:

None.

Strategic Priority:

Quality of Life and Place

Discussion:

LR, Local Retail District, in part, TH, Townhouse (Attached) Dwelling District, in part, MF-16, Multiple-Family Dwelling District, in part, SF-3, Single-Family Dwelling District, in part, SF-2, Single-Family Dwelling District, in part, SF-1, Single-Family Dwelling District, in part, 2F, Two-Family Dwelling (Duplex) District, in part.

Surrounding Zoning and Land Use:

The zoning to the north is SF-3, Single-Family Dwelling District and AE, Agricultural Estate District. The zoning to the east is AE, Agricultural Estate District. The properties to the south are zoned PD, Planned Development District for Housing Development (Ordinance 10344). The properties to the west are zoned PD, Planned Development District for Housing Development (Ordinance 6128) and SF-3, Single-Family Dwelling District.

Analysis:

Maverick Engineering, on behalf of Betenbough Homes LLC, is requesting a Zone Change for the development of multi-use site including single family housing, cottage housing, and greenspace uses. This proposed subdivision will have a total of one thousand three hundred and twenty-two (1,322) residential lots and approximately 60 acres of greenspace/detention pond that is composed of parks, trails, common areas, and drainage ponds.

The current zoning is LR, Local Retail District, in part, TH, Townhouse (Attached) Dwelling District, in part, MF-16, Multiple-Family Dwelling District, in part, SF-3, Single-Family Dwelling District, in part, SF-2, Single-Family Dwelling District, in part, SF-1, Single-Family Dwelling District, in part, 2F, Two-Family Dwelling (Duplex) District, in part, and the location of vacant property.

The applicant is proposing the development to be executed in fourteen (12-26) phases. The lots width will vary from either 45 or 50 feet and the minimum depth would be 83 feet. Below is a chart with the lot class tabulation, representing them by phases and percentage by lot widths.

LOT CLASS TABULATION

Product Class		Smallest Lot Area SF	Smallest Lot Depth LF	Phase # 12	13	14	15	16	17	18	19	20	21	22	23	24	25	26	Percent of Total
Core	45'	4825	96'	46	30	50	22	25	45	48	69	24	25	49	25	32	23	37	42%
	50'	4851	90'	53	20	64	46	35	16	6	37	40	22	28	26	31	25	16	35%
Cottages	50'	4120	83'	1	49	0	41	12	36	49	2	1	46	31	0	37	2	0	23%
PHASE TOTAL				100	99	114	109	72	97	103	108	65	93	108	51	100	50	53	100%
OVERALL TOTAL				1322															

These lots will have an underlying zoning of SF-3, Single Family Dwelling District but with the following amendments. The minimum dimensions are as follows:

For core dwellings:

1. The minimum lot Width shall be 45 feet.
2. The minimum lot Depth be 90 feet.
3. The minimum lot Area shall be 4,825 square feet.

For cottages:

1. A minimum lot Width shall be 50 feet.
2. A minimum lot Depth shall be 83 feet.
3. A minimum lot Area shall be 4,120 square feet.

The proposed uses consist of two product classes which are:

- 1015 - Core (SF-3, Single-Family Dwelling District lots)
- 307 – Cottages (SF-3, Single-Family District lots)

The proposed density for each district is as followed:

- Core (SF-3): 6.0 units per acre
- Cottage (SF-3): 1.84 units per acre

The appropriate setbacks and maximum height of future development must meet the regulations as described in Section 5.04 Residential Zoning District Dimensional Regulations chart. Not all the proposed lots meet the minimum lot depth, minimum lot width, and minimum lot area requirements of the SF-3 district. However, the new PD Ordinance will allow reduced depth, width, and areas as outlined above.

This proposed zone change has been circulated to the respective City departments for internal review and their comments, conditions, and requirements are as follows:

Fire: (Approved)

No objection to zone change.

Oil and Gas: (Approved)

No Oil & Gas well concerns. Non-Permitted wells identified with 135 ft. well radius of location on plat. Please note if oil & gas wells are not identified or left off plat, this could prevent receiving city permits for structures. Any plugged and abandoned (P&A) well would need to be identified. No structure shall be built over an abandoned well.

Engineering: (Approved)

No objections to zoning. [For Applicant's Information Only.]

Code: (Approved)

No issues. All future structures must adhere to the 2018 International Building Codes, the 2015 International Energy Code, the 2023 NEC requirements, the 2015 International Fire Codes, local city ordinances, zoning requirements, established setbacks, oil and gas considerations, and floodplain requirements if necessary. Code versions are subject to change depending on the time of new code editions adopted in the City of Midland and date of permit application.

Transportation: (Approved)

No objection to zone change. [For the Applicant's information only.]

Planning: (Approved)

The area is classified as Urban Residential-Low, in part, which calls for restrictive land use, emphasizing single-family detached development. The area is also classified as Urban Medium which calls for a mix of complementary uses, including single-family housing, multi-family housing, schools, mid-sized parks and churches, commercial and mixed use. The plan also calls for a parkway that would run through the property which is identified on the site plan. All of these uses are compatible with the Low and Medium designations.

The Tall City Tomorrow Comprehensive Plan, Chapter 3 An Integrated Land Use Vision, "Development Policy Areas" labels this area as part of the "Current Development Area" which seeks to address the compatibility of uses, "specifically between different housing intensities," As shown in the proposed site plan, the applicant is planning to create a gradual transition from existing housing developments at the western edge of the property in question which is consistent with this statement.

Principle 4 of Chapter 3 of the Tall City Tomorrow Plan seeks to increase the diversity of the housing stock in Midland specifically including the need of smaller lot homes. This proposal works in compliance since the development will be introducing a neighborhood with a mix of housing intensities to include single-family sized lots of varying in size. Additionally, Principle 8 of the Chapter 3 requests that land use policies and regulations support the creation of more balanced neighborhoods, which include “a variety of housing options, access to open space, and contain activity centers such as parks…” The applicant is proposing to develop more specifically delineated park space and trails in the development which will help give the residents a diversity of recreation allowing for a more balance feel.

Principle 5 of Chapter 3 requests planning for community amenities such as parks and open space to support “community activity, personal interaction a sense of place, and ultimately a sense of ownership in the community.” The applicant is proposing to include parks, greenspace, and trails, all of which will contribute to creating a sense of place for new residents.

The Planning and Zoning Commission recommended approval of this request on August 19, 2024.

If this zone change is approved, staff recommends that it should be subject to conditions A through C.

Conditions:

A. **That the Property, including the minimum dimensions of each lot and the minimum area of each lot contained therein, shall significantly conform to the site plan attached hereto as Exhibit “B”.**

B. **That the Property shall significantly conform to the amenity plan, which is attached hereto as Exhibit “C” and incorporated herein for all purposes.**

C. **That all signage shall conform to the regulations set forth in Title XI, Chapter 7a of the City Code.**

Letters of Objection:

Staff has not received any letters of objection as of September 4, 2024.

Attachments:

Application
Site Plan
Survey
Amenity Plan
Maps
PowerPoint

ORDINANCE NO. _____

AN ORDINANCE AMENDING THE ZONING DISTRICT MAP OF THE CITY OF MIDLAND TO REZONE A 302.39-ACRE TRACT OF LAND OUT OF SECTION 18, BLOCK 38, T-1-S, T&P RR CO. SURVEY, CITY AND COUNTY OF MIDLAND, TEXAS, FROM SF-1, SINGLE-FAMILY DWELLING DISTRICT, IN PART, SF-2, SINGLE-FAMILY DWELLING DISTRICT, IN PART, SF-3, SINGLE-FAMILY DWELLING DISTRICT, IN PART, TH, TOWNHOUSE (ATTACHED) DWELLING DISTRICT, IN PART, 2F, TWO-FAMILY DWELLING (DUPLEX) DISTRICT, IN PART, MF-16, MULTIPLE-FAMILY DWELLING DISTRICT, IN PART, AND LR, LOCAL RETAIL DISTRICT, IN PART, TO PD, PLANNED DEVELOPMENT DISTRICT FOR A HOUSING DEVELOPMENT (GENERALLY LOCATED AT THE NORTHEAST CORNER OF THE INTERSECTION OF FAIRGROUNDS ROAD AND FIREWHEEL ROAD); CONTAINING A CUMULATIVE CLAUSE; CONTAINING A SAVINGS AND SEVERABILITY CLAUSE; PROVIDING FOR A MAXIMUM PENALTY OR FINE OF TWO THOUSAND DOLLARS ($2,000.00); AND ORDERING PUBLICATION

WHEREAS, the City Planning and Zoning Commission and the Governing Body of the City of Midland, in compliance with the City Charter, the City Code, and State law, have given the requisite notices by United States mail, publication and otherwise; and after a full and fair hearing to all of the property owners generally and particularly to those interested persons situated in the affected area and in the vicinity thereof, the Governing Body finds that the public health, safety and general welfare will be best served by rezoning a 302.39-acre tract of land out of Section 18, Block 38, T-1-S, T&P RR Co. Survey, City and County of Midland, Texas, said tract being more specifically described by metes and bounds in Exhibit "A", which is attached hereto and incorporated herein (the "Property") to PD, Planned Development District for a Housing Development and adopting a site plan therefor, as set out hereinafter;

NOW, THEREFORE, BE IT ORDAINED BY THE CITY COUNCIL OF THE CITY OF MIDLAND, TEXAS:

SECTION ONE. That the Zoning District Map of the City of Midland, Texas, is hereby amended to rezone the Property from SF-1, Single-Family Dwelling District, in part,

SF-2, Single-Family Dwelling District, in part, SF-3, Single-Family Dwelling District, in part, TH, Townhouse (Attached) Dwelling District, in part, 2F, Two-Family Dwelling (Duplex) District, in part, MF-16, Multiple-Family Dwelling District, in part, and LR, Local Retail District, in part, to PD, Planned Development District for a Housing Development.

SECTION TWO. That the base zoning district to which the use and development of the Property shall conform, except as modified by Section Three of this ordinance, is the SF-3, Single-Family Dwelling District.

SECTION THREE. That a site plan, which is attached hereto as Exhibit "B" and incorporated herein for all purposes, is hereby adopted, and the use and development of the Property shall be subject to the following conditions and restrictions:

A. That the Property, including the minimum dimensions of each lot and the minimum area of each lot contained therein, shall significantly conform to the site plan attached hereto as Exhibit "B".

B. That the Property shall significantly conform to the amenity plan, which is attached hereto as Exhibit "C" and incorporated herein for all purposes.

C. That all signage shall conform to the regulations set forth in Title XI, Chapter 7a of the City Code.

SECTION FOUR. That the definitions given in the zoning regulations contained in the City Code of the City of Midland, Texas, shall be applicable to such of those terms as are used herein.

SECTION FIVE. The provisions of this ordinance are to be cumulative of all other ordinances or parts of ordinances governing or regulating the same subject matter as that covered herein; provided, however, that all prior ordinances or parts of ordinances inconsistent with or in conflict with any of the provisions of this ordinance are hereby expressly repealed to the extent of any such inconsistency or conflict.

SECTION SIX. If any section, subsection, sentence, clause or phrase of this ordinance is, for any reason, held to be unconstitutional or invalid, such holding shall not affect the validity of the remaining portions of this ordinance. The Council of the City of

Midland hereby declares that it would have passed this ordinance and each section, subsection, sentence, clause, or phrase hereof irrespective of the fact that any one or more sections, subsections, sentences, clauses, or phrases be declared unconstitutional or invalid.

SECTION SEVEN. The penalty for violation of this ordinance shall be in accordance with the general penalty provisions contained in Section 1-3-1 of the City Code of Midland, Texas, which provides for a fine not exceeding two thousand dollars ($2,000.00).

SECTION EIGHT. The City Secretary is hereby authorized and directed to publish the descriptive caption of this ordinance in the manner and for the length of time prescribed by the law as an alternative method of publication.

The above and foregoing ordinance was duly proposed, read in full and adopted on first reading, the _____ day of _____, A.D., 2024; and passed to second reading on motion of Council member _____, seconded by Council member _____, by the following vote:

Council members voting "AYE":

Council members voting "NAY":

The above and foregoing ordinance was read in full and finally adopted by the following vote upon motion of Council member _____, seconded by Council member _____, on the _____ day of _____, A.D., 2024, at a regular meeting of the City Council:

Council members voting "AYE":

Council members voting "NAY":

PASSED AND APPROVED THIS _____ day of _____, A.D., 2024.

_____
Lori Merritt Blong, Mayor

ATTEST:

_____
Marcia Bentley-German, City Secretary

APPROVED AS TO CONTENT
AND COMPLETENESS:

_____
Elizabeth Triggs, Planning and Development Officer

APPROVED ONLY AS TO FORM:

_____
John Ohnemiller, City Attorney

EXHIBIT "A"

MAVERICK
ENGINEERING • SURVEY • WATER RESOURCES
1909 West Wall Street, Suite K • Midland, TX 79701
Tel: 432.262.0999 • Fax: 432.262.0989 • maverick-eng.com
ENGINEER FIRM #: F-15089 | SURVEY FIRM #:10194514

FIELD NOTE DESCRIPTION OF A 302.39 ACRE TRACT OF LAND, SITUATED IN SECTION 18, BLOCK 38, TOWNSHIP 1 SOUTH, ABSTRACT NUMBER 734, GLO FILE NUMBER 66103, TEXAS and PACIFIC RAILWAY COMPANY SURVEY, MIDLAND COUNTY. TEXAS, AND BEING A PORTION OF THAT SAME TRACT CALLED FOR IN DOCUMENT NUMBER 2018-20726 OF THE OFFICIAL PUBLIC RECORDS (OPR) OF SAID MIDLAND COUNTY, AND BEING MORE PARTICULARLY DESCRIBED AS FOLLOWS;

BEGINNING AT N.(y): 10723537.29, E.(x): 1758089.19, A ONE HALF INCH IRON ROD WITH A PLASTIC CAP MARKED "ASB 5689", FOUND ON THE NORTH LINE OF SAID SECTION 18, AT THE NORTHEAST CORNER OF A CALLED 22.96 ACRE TRACT DESCRIBED IN DOCUMENT NUMBER 2019-3532 OF SAID PUBLIC RECORDS, FROM WHICH A ONE HALF INCH IRON ROD FOUND AT A FENCE CORNER AND ACCEPTED AS BEING IN THE POSITION OF THE PATENTED IRON PIPE AT THE COMMON WEST CORNER OF SAID SECTION 18, AND SECTION 7 OF THE SAME BLOCK BEARS S.75°19'52"W., ALONG THE COMMON LINE OF SAID SECTIONS 7 AND 18, 156.42 FEET, AND BEING THE NORTHWEST CORNER HEREOF;

THENCE N.75°19'52"E., ALONG THE COMMON LINE OF SAID SECTIONS 7 AND 18, 4894.40 FEET TO A RED PLASTIC CAP MARKED "MAVERICK FIRM#10194514" (RPC) SET AT A POINT OF DEFLECTION RIGHT FOR A CURVE TO THE LEFT HAVING A RADIUS OF 1040.00 FEET AND A CHORD BEARING AND DISTANCE OF S.06°51'59"E., 431.04 FEET BEING ON THE EAST LINE OF PROPOSED "TODD DRIVE" FOR THE NORTHEAST CORNER HEREOF;

THENCE ALONG SAID TODD DRIVE AND THE ARC OF SAID CURVE BEING CONCAVE TO THIS TRACT 434.18 FEET TO THE POINT OF TANGENCY;

THENCE S.18°49'35"E., CONTINUING ALONG SAID TODD DRIVE, 1868.51 FEET TO A POINT OF CURVATURE FOR A CURVE TO THE RIGHT HAVING A RADIUS OF 2560.00 FEET AND A CHORD BEARING AND DISTANCE OF S.16°37'01"E., 197.40 FEET;

THENCE ALONG THE ARC OF SAID CURVE BEING CONVEX TO THIS TRACT, 197.45 FEET TO A POINT OF DEFLECTION RIGHT FOR THE SOUTHEAST CORNER HEREOF;

THENCE THE FOLLOWING 9 COURSES AND DISTANCES ALL TO AN "RPC" FOUND, TO A POINT OF DEFLECTION LEFT FOR A CURVE TO THE RIGHT HAVING A RADIUS OF 1305.00 FEET AND A CHORD BEARING AND DISTANCE OF S.43°21'40"W., 886.78 FEET;

1. S.75°20'52"W., 265.00 FEET;
2. S.80°51'01"W., 60.26 FEET;
3. S.75°20'52"W., 115.00 FEET;
4. S.14°25'02"E., 7.06 FEET;
5. S.75°20'52"W., 115.00 FEET;
6. S.81°18'37"W., 60.27 FEET;
7. S.69°08'15"W., 114.62 FEET;
8. S.14°39'08"E., 46.14 FEET;
9. S.77°16'15"W., 15.51 FEET;

THENCE ALONG THE ARC OF SAID CURVE BEING CONVEX TO THIS TRACT 904.79 FEET TO A POINT OF DEFLECTION RIGHT;

THENCE N.26°46'36"W., 115.00 FEET TO AN "RPC" FOUND;

THENCE N.29°43'59"W., 80.11 FEET TO AN "RPC" FOUND;

THENCE N.26°33'48"W., 115.00 FEET TO AN "RPC" FOUND AT A POINT OF DEFLECTION LEFT FOR A CURVE TO THE RIGHT HAVING A RADIUS OF 995.00 FEET AND A CHORD BEARING AND DISTANCE OF S.66°52'14"W., 119.20 FEET;

THENCE ALONG THE ARC OF SAID CURVE BEING CONVEX TO THIS TRACT 119.27 FEET TO A POINT OF TANGENCY;

THENCE S.72°23'25"W., 72.42 FEET TO A POINT OF CURVATURE FOR A CURVE TO THE RIGHT HAVING A RADIUS OF 995.00 FEET AND A CHORD BEARING AND DISTANCE OF S.78°25'37"W., 137.13 FEET;

THENCE ALONG THE ARC OF SAID CURVE BEING CONVEX TO THIS TRACT 137.24 FEET TO A POINT OF DEFLECTION LEFT;

THENCE S.07°37'18"E., 115.00 FEET TO AN "RPC" FOUND AT A POINT OF DEFLECTION RIGHT FOR A CURVE TO THE RIGHT HAVING A RADIUS OF 1110.00 FEET AND A CHORD BEARING AND DISTANCE OF N.88°33'08"W., 349.94 FEET;

THENCE ALONG THE ARC OF SAID CURVE BEING CONVEX TO THIS TRACT 351.41 FEET TO A POINT OF REVERSE CURVATURE FOR A CURVE TO THE LEFT HAVING A RADIUS OF 1950.00 FEET AND A CHORD BEARING AND DISTANCE OF N.81°45'01"W., 154.30 FEET;

THENCE ALONG THE ARC OF SAID CURVE BEING CONCAVE TO THIS TRACT 154.34 FEET TO A POINT OF DEFLECTION RIGHT;

THENCE THE FOLLOWING 3 COURSES AND DISTANCES TO A POINT OF DEFLECTION RIGHT FOR A CURVE TO THE LEFT HAVING A RADIUS OF 1950.00 FEET AND A CHORD BEARING AND DISTANCE OF S.73°17'02"W., 1317.88 FEET;

1. N.42°57'36":W., 30.03 FEET;
2. N.85°29'31"W., 60.34 FEET;
3. S.45°51'35"W., 27.04 FEET;

THENCE ALONG THE ARC OF SAID CURVE BEING CONCAVE TO THIS TRACT 1344.34 FEET TO A POINT OF REVERSE CURVATURE FOR A CURVE TO THE RIGHT HAVING A RADIUS OF 920.00 FEET AND A CHORD BEARING AND DISTANCE OF S.64°37'59"W., 354.22 FEET;

THENCE ALONG THE ARC OF SAID CURVE BEING CONVEX TO THIS TRACT 356.44 FEET TO THE POINT OF TANGENCY;

THENCE THE FOLLOWING 5 COURSES AND DISTANCES;

1. S.75°43'57"W., 651.20 FEET;
2. N.59°20'03"W., 28.32 FEET;
3. S.74°47'34"W., 79.96 FEET;
4. S.75°43'57"W., 95.07 FEET TO AN "RPC" FOUND FOR THE SOUTHWEST CORNER HEREOF;
5. N.14°24'01"W., 2733.97 FEET TO THE **POINT OF BEGINNING**, CONTAINING 302.39 ACRES OF LAND.





JULY 10, 2024

Gregory W. Shoults
www.maverick-eng.com
Texas RPLS - No. 5356
Maverick Engineering (FIRM – No. 10194514)

EXHIBIT "B"

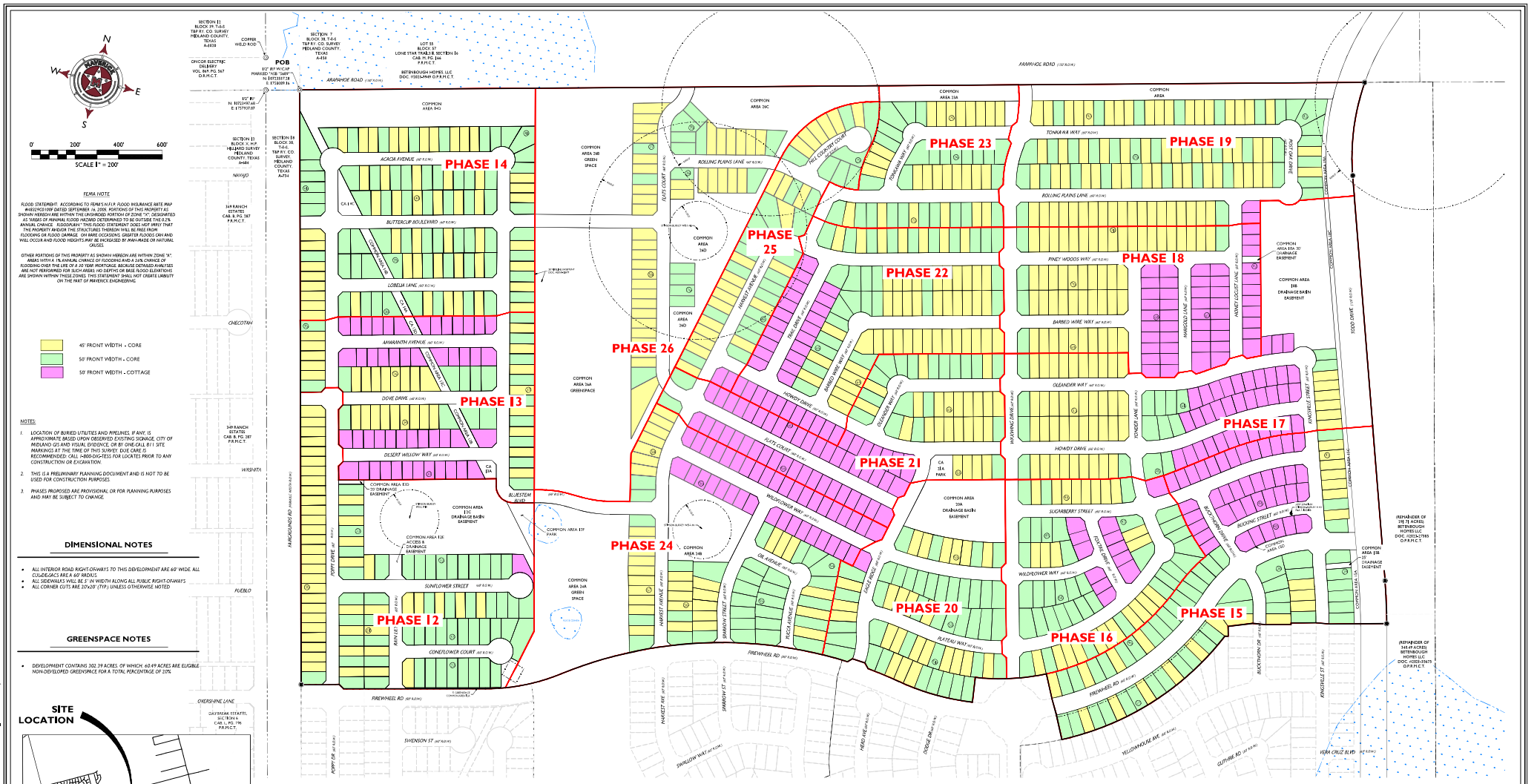

NOTES:

1. LOCATION OF BURIED UTILITIES AND PIPELINES, IF ANY, IS APPROXIMATE BASED UPON OBSERVED EXISTING SIGNAGE, CITY OF MIDLAND GIS AND VISUAL EVIDENCE, OR BY ONE-CALL 811 SITE MARKINGS AT THE TIME OF THIS SURVEY. DUE CARE IS RECOMMENDED. CALL 1-800-DIG-TESS FOR LOCATES PRIOR TO ANY CONSTRUCTION OR EXCAVATION.
2. THIS IS A PRELIMINARY PLANNING DOCUMENT AND IS NOT TO BE USED FOR CONSTRUCTION PURPOSES.
3. PHASES PROPOSED ARE PROVISIONAL OR FOR PLANNING PURPOSES AND MAY BE SUBJECT TO CHANGE.

DIMENSIONAL NOTES

- ALL INTERIOR ROAD RIGHT-OF-WAYS TO THIS DEVELOPMENT ARE 60' WIDE. ALL CUL-DE-SACS ARE A 60' RADIUS.
- ALL SIDEWALKS WILL BE 5' IN WIDTH ALONG ALL PUBLIC RIGHT-OF-WAYS
- ALL CORNER CUTS ARE 20'x20' (TYP.) UNLESS OTHERWISE NOTED

GREENSPACE NOTES

- DEVELOPMENT CONTAINS 302.39 ACRES OF WHICH 60.49 ACRES ARE ELIGIBLE NON-DEVELOPED GREENSPACE FOR A TOTAL PERCENTAGE OF 20%

FEMA NOTE

FLOOD STATEMENT: ACCORDING TO FEMA'S N.F.I.P. FLOOD INSURANCE RATE MAP #48329C0100F DATED SEPTEMBER 26, 2008, PORTIONS OF THIS PROPERTY AS SHOWN HEREON ARE WITHIN THE UNSHADED PORTION OF ZONE "X", DESIGNATED AS "AREAS OF MINIMAL FLOOD HAZARD DETERMINED TO BE OUTSIDE THE 0.2% ANNUAL CHANCE FLOODPLAIN." THIS FLOOD STATEMENT DOES NOT IMPLY THAT THE PROPERTY AND/OR THE STRUCTURES THEREON WILL BE FREE FROM FLOODING OR FLOOD DAMAGE. ON RARE OCCASIONS GREATER FLOODS CAN AND WILL OCCUR AND FLOOD HEIGHTS MAY BE INCREASED BY MAN-MADE OR NATURAL CAUSES.

OTHER PORTIONS OF THIS PROPERTY AS SHOWN HEREON ARE WITHIN ZONE "X", AREAS WITH A 1% ANNUAL CHANCE OF FLOODING AND A 26% CHANCE OF FLOODING OVER THE LIFE OF A 30 YEAR MORTGAGE. BECAUSE DETAILED ANALYSES ARE NOT PERFORMED FOR SUCH AREAS; NO DEPTHS OR BASE FLOOD ELEVATIONS ARE SHOWN WITHIN THESE ZONES. THIS STATEMENT SHALL NOT CREATE LIABILITY ON THE PART OF MAVERICK ENGINEERING.

- GENERAL: SITE PLAN IS FOR A PROPOSED 1,322 LOT RESIDENTIAL SUBDIVISION WITH PROPOSED DEDICATED STORMWATER DETENTION BASINS SITUATED WITHIN HOA-MAINTAINED COMMON AREA GREEN SPACES, ALL BEING OUT OF A 302.39 ACRE TRACT OF LAND SITUATED IN SECTION 18, BLOCK 38, T-1-S, T&P RY. CO. SURVEY, CITY AND COUNTY OF MIDLAND, TEXAS.
- DEVELOPMENT: THE DEVELOPMENT WILL CONSIST OF SINGLE FAMILY RESIDENTIAL DETACHED LOTS OF MIXED CLASSIFICATION SEE INCLUDED LOT CLASS TABULATION FOR THE OVERALL LOT MAKEUP.
- SETBACKS: PROPOSED SETBACKS ON THE RESIDENTIAL COMPONENT OF THE SUBDIVISION ARE AS FOLLOWS: FRONT 20', CUL-DE-SAC FRONT 15', SIDE 5', CORNER SIDE 10', REAR 10'.
- BUILDING HEIGHT: NO STRUCTURE SHALL EXCEED 42' IN HEIGHT OR 3 STORIES WITHIN THIS DEVELOPMENT.
- ACCESS: THE SITE IS PLANNED TO HAVE 14 EVENTUAL ACCESS POINTS, TWO TO THE WEST ACCESSING FAIRGROUNDS ROAD, ONE TO THE EAST ACCESSING TODD DRIVE, TWO TO THE NORTH ACCESSING ARAPAHOE, AND NINE TO THE SOUTH ACCESSING FIREWHEEL LANE. ALL ACCESS POINTS ARE PLANNED FOR BOTH INGRESS AND EGRESS.
- EASEMENTS: OUTSIDE OF EXISTING EASEMENT ESTATE ON THE PARENT TRACT, THE FOLLOWING EASEMENTS ARE PLANNED TO SERVICE THE DEVELOPMENT:
  - ** 10' GENERAL UTILITY EASEMENT ALONG THE FRONTAGE OF ALL LOTS
  - ** DEDICATED STORMWATER DRAINAGE BASINS WITHIN COMMON AREAS INDICATED.
- UTILITIES: PUBLIC UTILITIES WILL SERVICE THE DEVELOPMENT FROM THE EXISTING ADJACENT INFRASTRUCTURE AND EXPANDED ON AND OFFSITE INFRASTRUCTURE PROPOSED AS A REQUIRED COMPONENT OF THIS DEVELOPMENT. PUBLIC UTILITIES WILL BE ROUTED WITHIN THE RIGHT-OF-WAY THROUGHOUT THE INTERIOR OF THIS SUBDIVISION AND NEW WATER AND SEWER TAPS WILL BE REQUIRED.
- REFUSE: TRASH COLLECTION WILL BE IN COMPLIANCE WITH THE CITY OF MIDLAND REQUIREMENTS, COLLECTED BY THE CITY OF MIDLAND UTILIZING SIDE LOADING TRUCKS.
- DRAINAGE: STORM WATER RUNOFF WILL BE DETAINED SO AS NOT TO INCREASE EXISTING PEAK RUNOFF IN COMPLIANCE WITH THE APPROVED DRAINAGE REPORT TO BE FILED WITH THE APPROVED PRELIMINARY PLAT.

LEGEND

- DENOTES SET 1/2-INCH IRON ROD WIRED PLASTIC CAP MARKED "MAVERICK FIRM #10194514"
- DENOTES FOUND MONUMENT AS NOTED
- DENOTES POINT OF CURVATURE/INTERSECTION
- DENOTES MAG NAIL FOUND
- DENOTES BOUNDARY LINE
- DENOTES EXISTING ADJACENT PROPERTY LINES
- DENOTES PROPOSED EASEMENT
- DENOTES SECTION LINE

P.R.M.C.T. DENOTES PLAT RECORDS, MIDLAND CO., TX
O.P.R.M.C.T. DENOTES OFFICIAL PUBLIC RECORDS, MIDLAND CO., TX
D.R.M.C.T. DENOTES DEED RECORDS, MIDLAND CO., TX
(#) DENOTES SECTION NUMBER

LOT CLASS TABULATION

Product Class		Smallest Lot Area SF	Smallest Lot Depth LF	Phase # 12	13	14	15	16	17	18	19	20	21	22	23	24	25	26	Percent of Total
Core	45'	4825	90'	46	30	50	22	25	45	48	69	24	25	49	25	32	23	37	42%
	50'	4851	90'	53	20	64	46	35	16	6	37	40	22	28	26	31	25	16	35%
Cottages	50'	4120	83'	1	49	0	41	12	36	49	2	1	46	31	0	37	2	0	23%
PHASE TOTAL				100	99	114	109	72	97	103	108	65	93	108	51	100	50	53	100%
OVERALL TOTAL												1322							

MOCKINGBIRD RIDGE NORTH

PDHD SITE PLAN

BEING A 302.39 ACRE TRACT OF LAND, SITUATED IN SECTION 18, BLOCK 38, T-1-S, A-734, T&P RY. CO. SURVEY, CITY AND COUNTY OF MIDLAND, TEXAS

MAVERICK
CIVIL ENGINEERING / LAND SURVEYING
1909 West Wall Street, Suite "K"
Midland, Texas 79701
ENGINEER FIRM #: F-15089
SURVEY FIRM #: 10194514
Tel (432) 262-0999 Fax (432) 262-0989
www.Maverick-Eng.com

SHEET 01 OF 04

MOCKINGBIRD RIDGE

AMENITY MAP

Mockingbird Ridge Space Percentages		
Usable Acres	501	%
Amenity Space (Acreage) Parks, Native Area, Parkway, Treelines, Roundabout	**76**	**15%**
Lots & ROW	425	85%

Open, Active Space	Acres	Qty	Radius Miles (Ideal)	Radius Miles Standard)
	6	**5**		
Park (SE)	4	1 (Large)	0.25	0.50
Park (North Central)	1	1 (Med/Small)	0.25	0.50
Park (Far North Central)	0.2	1 (Med/Small)	0.25	0.50
Park (Triangle North of Firewheel)	0.5	Grass	0.25	0.50
Park (Triangle South of Firewheel)	0.5	Grass	0.25	0.50

Source for Radius Numbers: Midland Parks, Recreation, and Open Space Master Plan Page 3.18

Trail (Miles)	**4**
Total (Feet)	**23,240**
Trail North	2,713
Trail South	1,918
Trail Pipeline	1,901
Trail Common Area	637
Trail Park (Southeast - around Playscape)	1,500
Trail Park (Southeast Extention)	1,806
Trail around Basin (North Central)	1,288
Trail around Basin (Northeast)	1,984
Trail along Firewheel (Treelined Streets)	5,396
Trail along Blazing Saddle	1,235
Trail along Waxwing North (Pocket Park down to Roundabout)	2,862

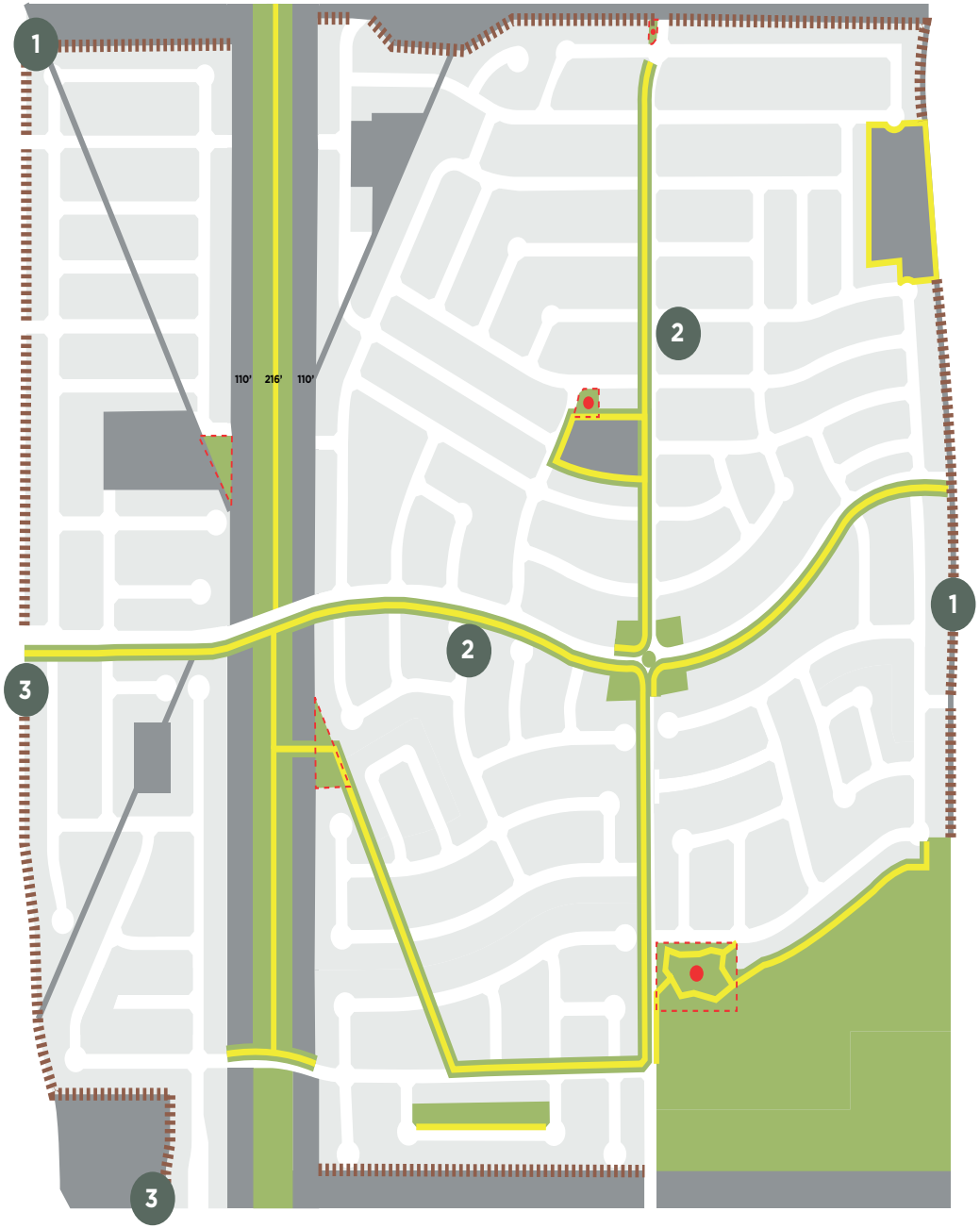

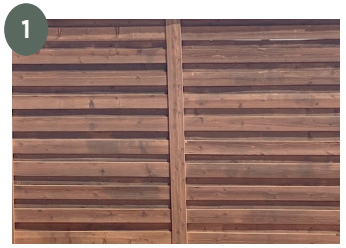





Home Sites

Amenity/Native Space

Unusable Space
(Pipeline, Basin, Oil Wells, Commercial)

Trails

Community Fence

Playscape

MIDLAND Planning Division

Zone Change/Planned District Amendment/Site Plan Approval

Project Number: Z-24-0387

Case Number:

Applicant *(if acting as Agent, see affidavit on page 2)* Printed Name: Betenbough Homes LLC		Phone (432) 262-0999 Email ronniew@betenbough.com	
Address 6305 82nd St	City Lubbock	State TX	Zip 79424

Property Owner Printed Name: see applicant		Phone ( ) Email	
Address	City	State	Zip

Representative *(if different from Applicant or Property Owner)* Firm: Maverick Engineering Printed Name: Paladin Huckaba		Phone (432) 262-0999 Email phuckaba@maverick-eng.com	
Address 1909 W Wall St Ste K	City Midland	State TX	Zip 79701

Street Address: NA

Legal Description 302.39 ACRE TRACT OF LAND, SITUATED IN SECTION 18, BLOCK 38, T-1-S, A-734, T&P
Lot: Bloc RY. CO. SURVEY, CITY AND COUNTY OF MIDLAND, TEXAS

Current Zoning: LR, TH, MF16, SF3, SF2 SF1, 2F

Proposed Zone: PDHD
(List by tracts if more than one district is requested)

Reason for Zone Change Request: To advance proposed housing development

Present Use of Property: vacant

Proposed Use of Property: Residential

How would this zone change affect the public health, safety and welfare? no adverse affect

Describe how conditions affecting the property have changed since present zoning designation: No Change since original zoning

Submittal and Fees

Items to be submitted with this application form:

- Application Fee – Payable to the 'City of Midland'
- Dimensioned Site Plan
- Digital Copies of Site Plan (PDF/JPEG)

Signature *(by property owner only – authorized agent must sign affidavit below)*	
Applicant (signature):	Date: 7-10-24
Applicant (printed): Ronnie Wallace	
Property Owner (signature): see applicant	Date: 7-10-24
Property Owner (printed) : see applicant	

The Zone Change/Planned District Amendment/Site Plan Approval shall be considered officially received in the Planning office only when it has been submitted in full compliance with the provisions of Section 212 of the Texas Local Government Code and the Zoning Code of Ordinances of the City of Midland and when such required items for the application are also received.

All materials, including exhibits, submitted in support of an application, or displayed during a public hearing, shall remain the property of the City of Midland.

If an agent is authorized by the property owner to file and execute the application on behalf of the property owner, the agent must complete the affidavit below.

STATE OF TEXAS
COUNTY OF MIDLAND

Before me, the undersigned authority, on this day personally appeared Ashlee Devine who, being by me duly sworn, upon oath says: That (s)he is authorized by Betenbough Homes LLC, the owner of the above described property, to fully represent him/her in this application and that (s)he had the legal right, power and authority to sign said owner's name hereto as his/her attorney in fact.

Ashlee Devine
Authorized Agent (*signature*)

Subscribed and sworn to before me, this 10 day of July, 2024, to certify which witness my hand and seal of office.

JACQUELINE L. MELLEN
Notary Public, State of Texas
Comm. Expires 04-24-2028
Notary ID 129443262

Jacqueline L. Mellen
NOTARY PUBLIC, MIDLAND COUNTY, TEXAS

FOR OFFICE USE ONLY

☑ Property Owner Authorization	☑ Dimensioned Site Plan
☑ Application Fee	☑ Plans in Digital Format (PDF/JPEG) - Sarah Blanden
Check # 4798	
Received By: Alexis	Date: RECEIVED JUL 10 2024
	BY:

Application will not be considered for scheduling until reviewed by a planner.*

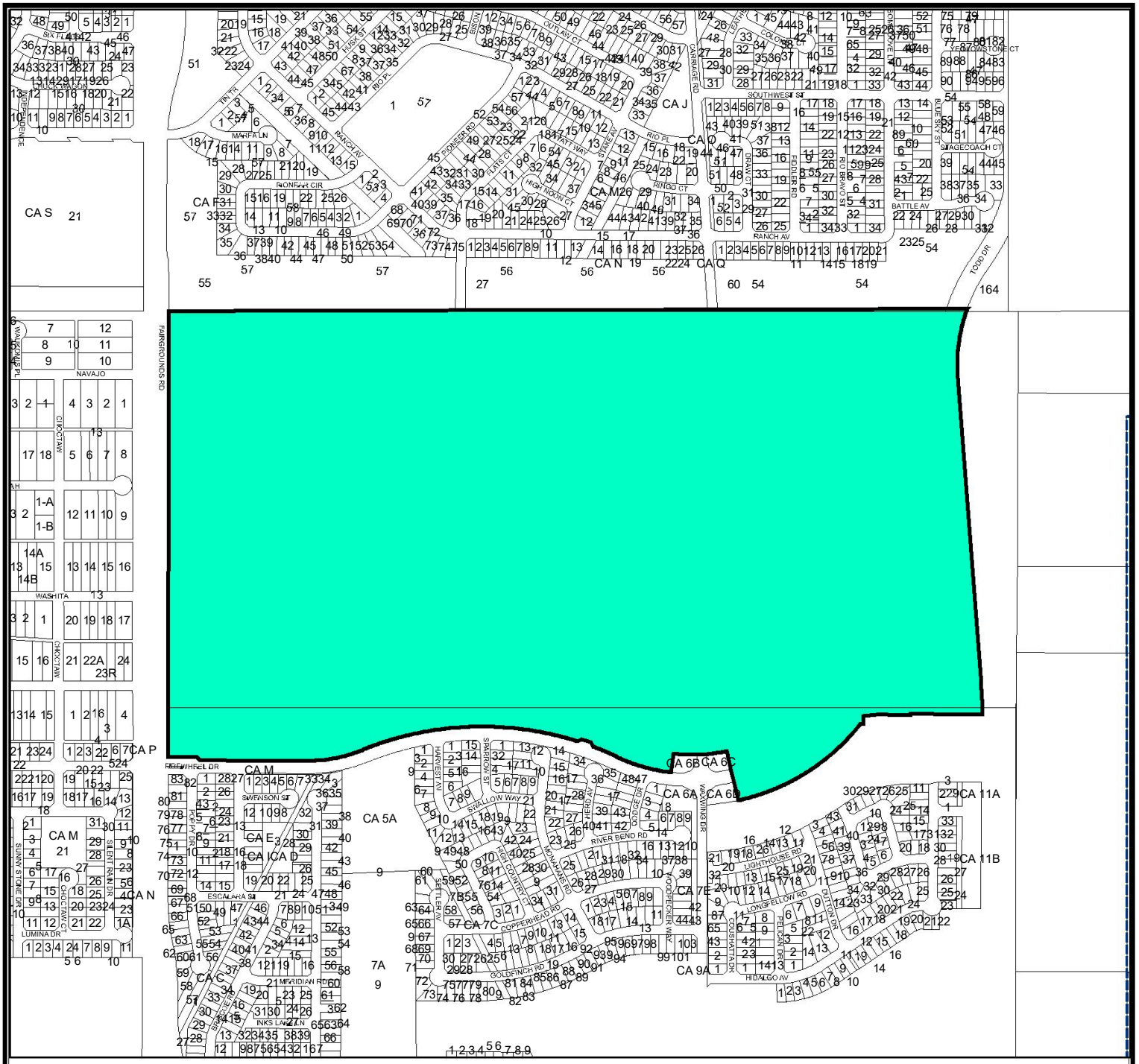

Location Map

Z-24-0387 **Scale: 1" = 877'**

Consider a request by Maverick Engineering, on behalf of Betenbough Homes LLC, for a zone change from LR, Local Retail District, in part, TH, Townhouse (Attached) Dwelling District, in part, MF-16, Multiple-Family Dwelling District, in part, SF-3, Single-Family Dwelling District, in part, SF-2, Single-Family Dwelling District, in part, SF-1, Single-Family Dwelling District, in part, 2F, Two-Family Dwelling (Duplex) District, in part, to PD, Planned Development District for Housing Development out of a 302.39 tract of land, in Section 18, Block 38, T-I-S, A-734, T&P RY. CO. Survey, City and County of Midland, Texas.

Generally located northeast of the intersection of Fairgrounds Road and Firewheel Road. (Council District 1)

LEGEND

- CITY LIMITS
- PARCEL
- PRIVATE BLDGS

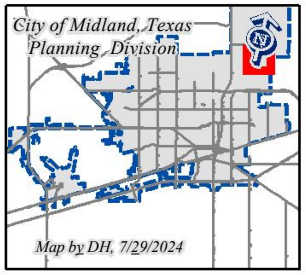

©THE CITY OF MIDLAND - 2021
THIS DATA IS NOT A SUBSTITUTION FOR A SURVEY AND IS NOT DESIGNED TO BE USED AS THE PRIMARY TOOL IN PERMITTING OR OTHER DECISIONS BASED SOLELY ON THE INFORMATION CONTAINED HEREIN.
THE CITY OF MIDLAND SHALL NOT BE RESPONSIBLE FOR ANY DECISIONS BASED UPON THE USE OF THIS DATA.

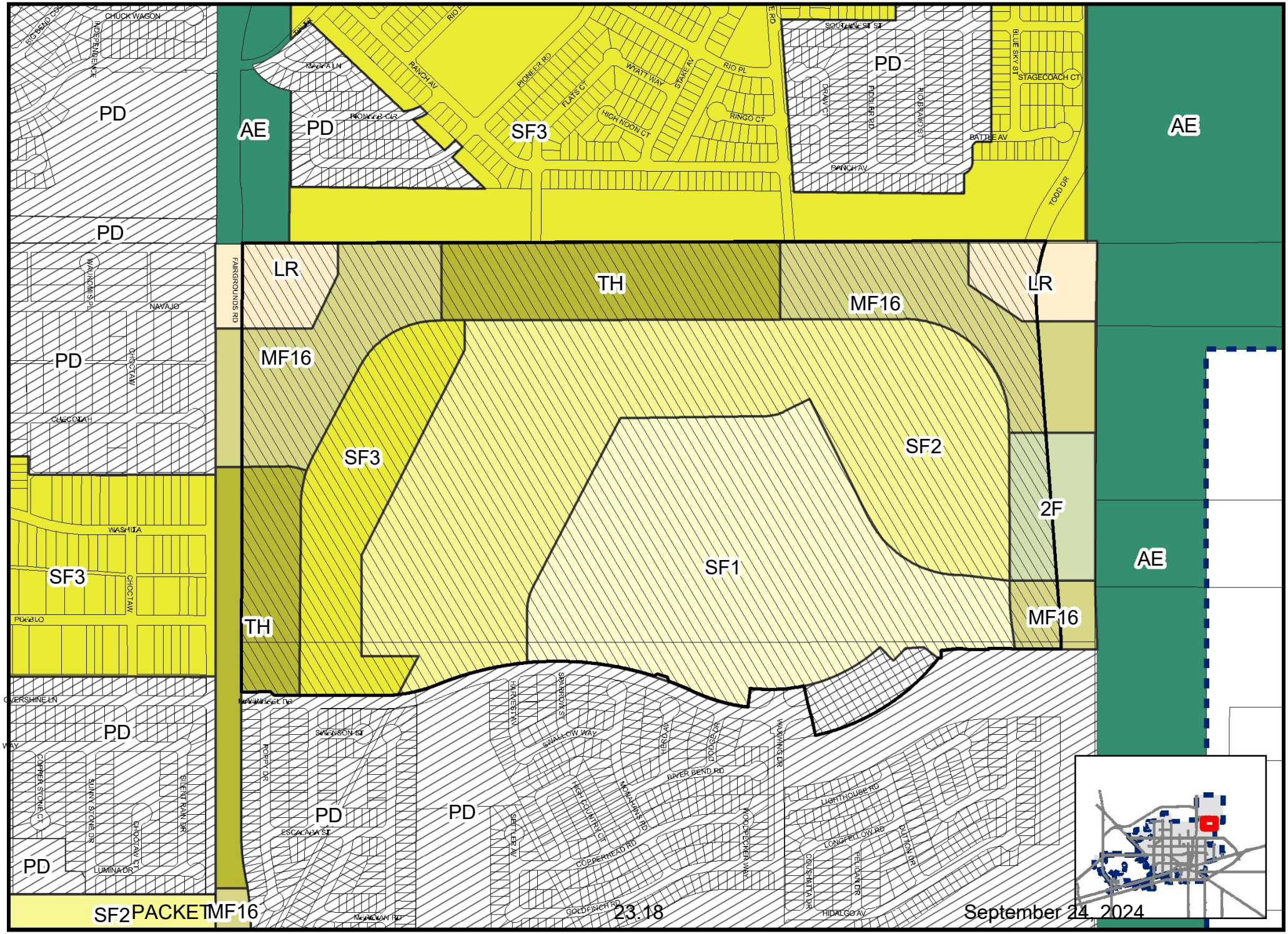

PACKET 23.18

September 24, 2024

Map DH, 7/29/2024

Z-24-0387

Scale: 1" = 732'

ZONING MAP

© THE CITY OF MIDLAND - 2021: THIS DATA IS NOT A SUBSTITUTION FOR A SURVEY PRODUCT, NOR IS IT DESIGNED TO BE USED AS A PRIMARY TOOL IN PERMITTING OR OTHER DECISIONS BASED SOLELY ON THE INFORMATION CONTAINED HEREIN THE CITY OF MIDLAND SHALL NOT BE RESPONSIBLE FOR ANY DECISIONS BASED UPON THE USE OF THIS DATA

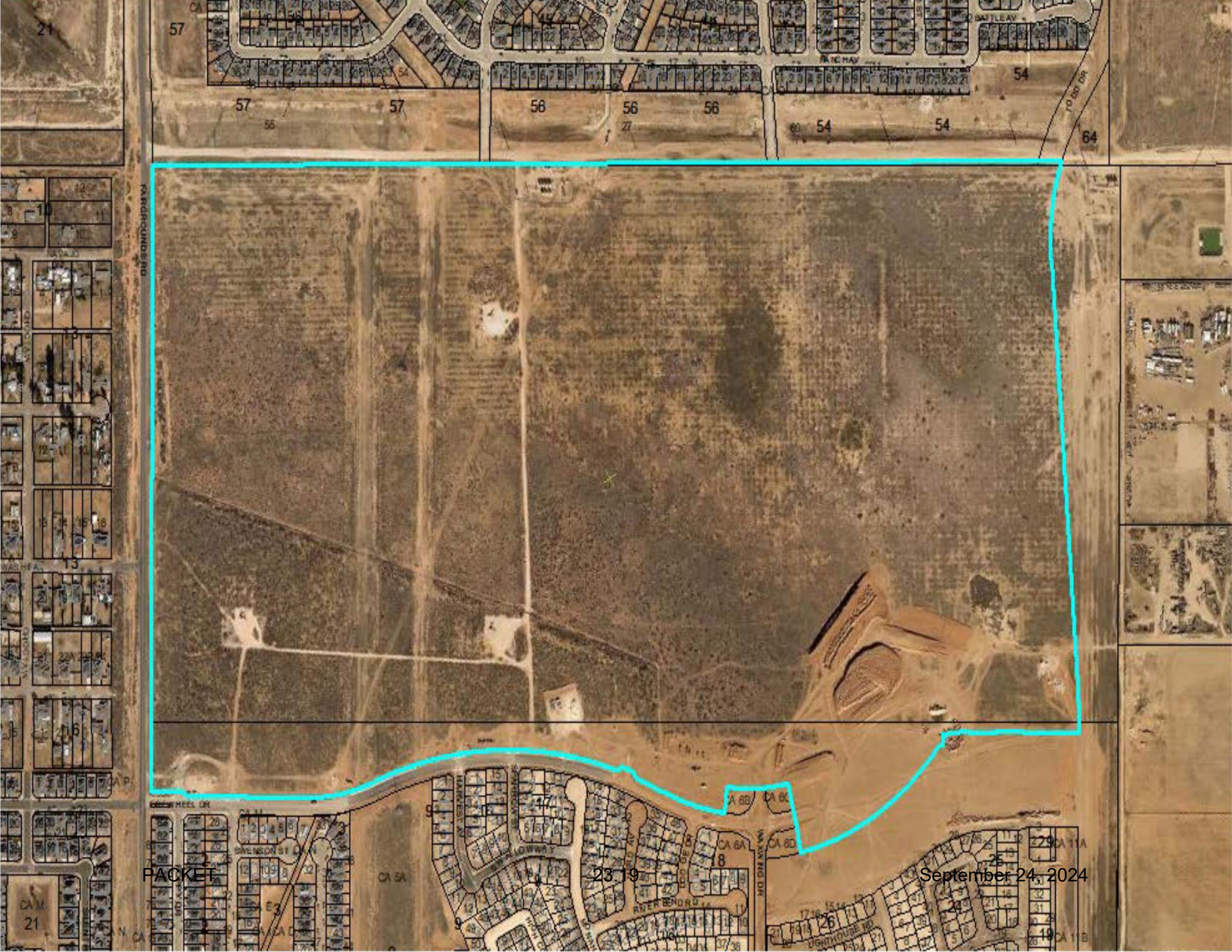
FARGROUNDS RD
NAVAJO
SWENSON ST
CA 5A
CA 6A
CA 6B
CA 6D
CA 11A
CA 11B
RIVER BEND RD
LIGHTHOUSE RD
BATTLE AV
RANCH AV
FOOD DR


PACKET
23.20
September 24, 2024

MOCKINGBIRD RIDE NORTH

PDHD SITE PLAN

BEING A 302.54 ACRE TRACT OF LAND, SITUATED IN SECTION 18, BLOCK 38, T-1-S, A-734 T&P RY. CO. SURVEY, CITY AND COUNTY OF MIDLAND, TEXAS

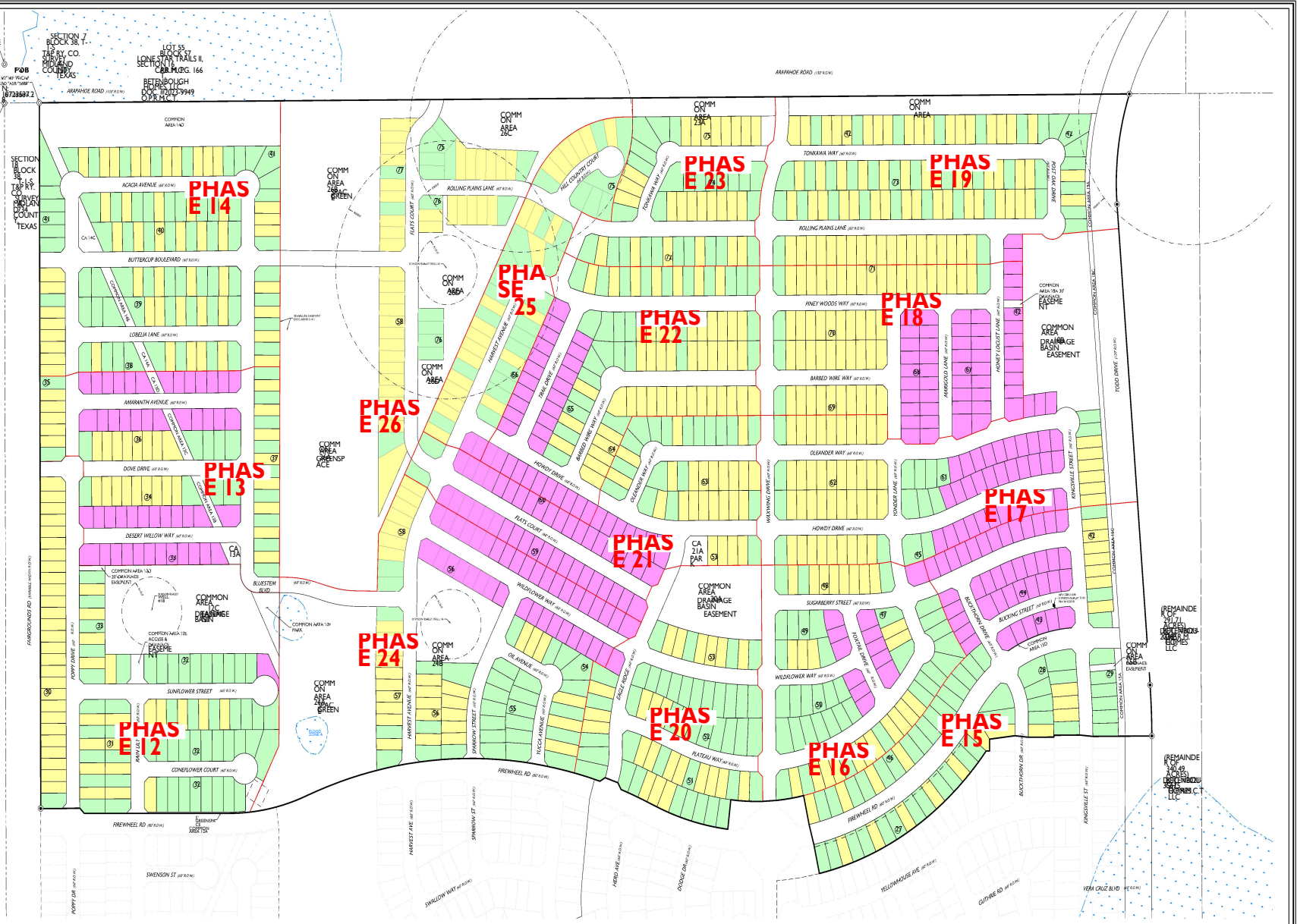
PHASE 14
PHASE 13
PHASE 12
PHASE 26
PHASE 25
PHASE 24
PHASE 23
PHASE 22
PHASE 21
PHASE 20
PHASE 19
PHASE 18
PHASE 17
PHASE 16
PHASE 15
ARAPAHOE ROAD
FIREWHEEL RD.
ROLLING PLAINS LANE
BUTTERCUP BOULEVARD
LOBELIA LANE
AMARANTH AVENUE
DOVE DRIVE
DESERT WILLOW WAY
SUNFLOWER STREET
CONEFLOWER COURT
BLUESTEM BLVD.
HOWDY DRIVE
WILDFLOWER WAY
SUGARBERRY STREET
BARBED WIRE WAY
OLEANDER WAY
PINEY WOODS WAY
TONKAWA WAY
PLATEAU WAY
OLIVE AVENUE
SWENSON ST
YELLOWHOUSE AVE
VERA CRUZ BLVD
FAIRGROUNDS RD
POPPY DRIVE
HARVEST AVENUE
SPANNION ST
TUCCA AVENUE
EAGLE RIDGE
BLACKTHORN DRIVE
KINGSVILLE STREET
TODD DRIVE
HONEY LOCUST LANE
MARIGOLD LANE
YONDER LANE
MAYSTANG DRIVE
TRAIL DRIVE
HILL COUNTRY COURT
FLATS COURT
HARVEST MOON AVE
HERO AVE
DODGE DR
SWALLOW WAY
CULTIVAR RD
YELLOWHOUSE AVE
COMMON AREA 14D
COMMON AREA 12E
COMMON AREA 12G
COMMON AREA 12H
COMMON AREA 12I
COMMON AREA 12J
COMMON AREA 12K
COMMON AREA 12L
COMMON AREA 12M
COMMON AREA 12N
COMMON AREA 12O
COMMON AREA 12P
COMMON AREA 12Q
COMMON AREA 12R
COMMON AREA 12S
COMMON AREA 12T
COMMON AREA 12U
COMMON AREA 12V
COMMON AREA 12W
COMMON AREA 12X
COMMON AREA 12Y
COMMON AREA 12Z
COMMON AREA 13A
COMMON AREA 13B
COMMON AREA 13C
COMMON AREA 13D
COMMON AREA 13E
COMMON AREA 13F
COMMON AREA 13G
COMMON AREA 13H
COMMON AREA 13I
COMMON AREA 13J
COMMON AREA 13K
COMMON AREA 13L
COMMON AREA 13M
COMMON AREA 13N
COMMON AREA 13O
COMMON AREA 13P
COMMON AREA 13Q
COMMON AREA 13R
COMMON AREA 13S
COMMON AREA 13T
COMMON AREA 13U
COMMON AREA 13V
COMMON AREA 13W
COMMON AREA 13X
COMMON AREA 13Y
COMMON AREA 13Z
COMMON AREA 14A
COMMON AREA 14B
COMMON AREA 14C
COMMON AREA 14D
COMMON AREA 14E
COMMON AREA 14F
COMMON AREA 14G
COMMON AREA 14H
COMMON AREA 14I
COMMON AREA 14J
COMMON AREA 14K
COMMON AREA 14L
COMMON AREA 14M
COMMON AREA 14N
COMMON AREA 14O
COMMON AREA 14P
COMMON AREA 14Q
COMMON AREA 14R
COMMON AREA 14S
COMMON AREA 14T
COMMON AREA 14U
COMMON AREA 14V
COMMON AREA 14W
COMMON AREA 14X
COMMON AREA 14Y
COMMON AREA 14Z
COMMON AREA 15A
COMMON AREA 15B
COMMON AREA 15C
COMMON AREA 15D
COMMON AREA 15E
COMMON AREA 15F
COMMON AREA 15G
COMMON AREA 15H
COMMON AREA 15I
COMMON AREA 15J
COMMON AREA 15K
COMMON AREA 15L
COMMON AREA 15M
COMMON AREA 15N
COMMON AREA 15O
COMMON AREA 15P
COMMON AREA 15Q
COMMON AREA 15R
COMMON AREA 15S
COMMON AREA 15T
COMMON AREA 15U
COMMON AREA 15V
COMMON AREA 15W
COMMON AREA 15X
COMMON AREA 15Y
COMMON AREA 15Z
COMMON AREA 16A
COMMON AREA 16B
COMMON AREA 16C
COMMON AREA 16D
COMMON AREA 16E
COMMON AREA 16F
COMMON AREA 16G
COMMON AREA 16H
COMMON AREA 16I
COMMON AREA 16J
COMMON AREA 16K
COMMON AREA 16L
COMMON AREA 16M
COMMON AREA 16N
COMMON AREA 16O
COMMON AREA 16P
COMMON AREA 16Q
COMMON AREA 16R
COMMON AREA 16S
COMMON AREA 16T
COMMON AREA 16U
COMMON AREA 16V
COMMON AREA 16W
COMMON AREA 16X
COMMON AREA 16Y
COMMON AREA 16Z
COMMON AREA 17A
COMMON AREA 17B
COMMON AREA 17C
COMMON AREA 17D
COMMON AREA 17E
COMMON AREA 17F
COMMON AREA 17G
COMMON AREA 17H
COMMON AREA 17I
COMMON AREA 17J
COMMON AREA 17K
COMMON AREA 17L
COMMON AREA 17M
COMMON AREA 17N
COMMON AREA 17O
COMMON AREA 17P
COMMON AREA 17Q
COMMON AREA 17R
COMMON AREA 17S
COMMON AREA 17T
COMMON AREA 17U
COMMON AREA 17V
COMMON AREA 17W
COMMON AREA 17X
COMMON AREA 17Y
COMMON AREA 17Z
COMMON AREA 18A
COMMON AREA 18B
COMMON AREA 18C
COMMON AREA 18D
COMMON AREA 18E
COMMON AREA 18F
COMMON AREA 18G
COMMON AREA 18H
COMMON AREA 18I
COMMON AREA 18J
COMMON AREA 18K
COMMON AREA 18L
COMMON AREA 18M
COMMON AREA 18N
COMMON AREA 18O
COMMON AREA 18P
COMMON AREA 18Q
COMMON AREA 18R
COMMON AREA 18S
COMMON AREA 18T
COMMON AREA 18U
COMMON AREA 18V
COMMON AREA 18W
COMMON AREA 18X
COMMON AREA 18Y
COMMON AREA 18Z
COMMON AREA 19A
COMMON AREA 19B
COMMON AREA 19C
COMMON AREA 19D
COMMON AREA 19E
COMMON AREA 19F
COMMON AREA 19G
COMMON AREA 19H
COMMON AREA 19I
COMMON AREA 19J
COMMON AREA 19K
COMMON AREA 19L
COMMON AREA 19M
COMMON AREA 19N
COMMON AREA 19O
COMMON AREA 19P
COMMON AREA 19Q
COMMON AREA 19R
COMMON AREA 19S
COMMON AREA 19T
COMMON AREA 19U
COMMON AREA 19V
COMMON AREA 19W
COMMON AREA 19X
COMMON AREA 19Y
COMMON AREA 19Z
COMMON AREA 20A
COMMON AREA 20B
COMMON AREA 20C
COMMON AREA 20D
COMMON AREA 20E
COMMON AREA 20F
COMMON AREA 20G
COMMON AREA 20H
COMMON AREA 20I
COMMON AREA 20J
COMMON AREA 20K
COMMON AREA 20L
COMMON AREA 20M
COMMON AREA 20N
COMMON AREA 20O
COMMON AREA 20P
COMMON AREA 20Q
COMMON AREA 20R
COMMON AREA 20S
COMMON AREA 20T
COMMON AREA 20U
COMMON AREA 20V
COMMON AREA 20W
COMMON AREA 20X
COMMON AREA 20Y
COMMON AREA 20Z
COMMON AREA 21A
COMMON AREA 21B
COMMON AREA 21C
COMMON AREA 21D
COMMON AREA 21E
COMMON AREA 21F
COMMON AREA 21G
COMMON AREA 21H
COMMON AREA 21I
COMMON AREA 21J
COMMON AREA 21K
COMMON AREA 21L
COMMON AREA 21M
COMMON AREA 21N
COMMON AREA 21O
COMMON AREA 21P
COMMON AREA 21Q
COMMON AREA 21R
COMMON AREA 21S
COMMON AREA 21T
COMMON AREA 21U
COMMON AREA 21V
COMMON AREA 21W
COMMON AREA 21X
COMMON AREA 21Y
COMMON AREA 21Z
COMMON AREA 22A
COMMON AREA 22B
COMMON AREA 22C
COMMON AREA 22D
COMMON AREA 22E
COMMON AREA 22F
COMMON AREA 22G
COMMON AREA 22H
COMMON AREA 22I
COMMON AREA 22J
COMMON AREA 22K
COMMON AREA 22L
COMMON AREA 22M
COMMON AREA 22N
COMMON AREA 22O
COMMON AREA 22P
COMMON AREA 22Q
COMMON AREA 22R
COMMON AREA 22S
COMMON AREA 22T
COMMON AREA 22U
COMMON AREA 22V
COMMON AREA 22W
COMMON AREA 22X
COMMON AREA 22Y
COMMON AREA 22Z
COMMON AREA 23A
COMMON AREA 23B
COMMON AREA 23C
COMMON AREA 23D
COMMON AREA 23E
COMMON AREA 23F
COMMON AREA 23G
COMMON AREA 23H
COMMON AREA 23I
COMMON AREA 23J
COMMON AREA 23K
COMMON AREA 23L
COMMON AREA 23M
COMMON AREA 23N
COMMON AREA 23O
COMMON AREA 23P
COMMON AREA 23Q
COMMON AREA 23R
COMMON AREA 23S
COMMON AREA 23T
COMMON AREA 23U
COMMON AREA 23V
COMMON AREA 23W
COMMON AREA 23X
COMMON AREA 23Y
COMMON AREA 23Z
COMMON AREA 24A
COMMON AREA 24B
COMMON AREA 24C
COMMON AREA 24D
COMMON AREA 24E
COMMON AREA 24F
COMMON AREA 24G
COMMON AREA 24H
COMMON AREA 24I
COMMON AREA 24J
COMMON AREA 24K
COMMON AREA 24L
COMMON AREA 24M
COMMON AREA 24N
COMMON AREA 24O
COMMON AREA 24P
COMMON AREA 24Q
COMMON AREA 24R
COMMON AREA 24S
COMMON AREA 24T
COMMON AREA 24U
COMMON AREA 24V
COMMON AREA 24W
COMMON AREA 24X
COMMON AREA 24Y
COMMON AREA 24Z
COMMON AREA 25A
COMMON AREA 25B
COMMON AREA 25C
COMMON AREA 25D
COMMON AREA 25E
COMMON AREA 25F
COMMON AREA 25G
COMMON AREA 25H
COMMON AREA 25I
COMMON AREA 25J
COMMON AREA 25K
COMMON AREA 25L
COMMON AREA 25M
COMMON AREA 25N
COMMON AREA 25O
COMMON AREA 25P
COMMON AREA 25Q
COMMON AREA 25R
COMMON AREA 25S
COMMON AREA 25T
COMMON AREA 25U
COMMON AREA 25V
COMMON AREA 25W
COMMON AREA 25X
COMMON AREA 25Y
COMMON AREA 25Z
COMMON AREA 26A
COMMON AREA 26B
COMMON AREA 26C
COMMON AREA 26D
COMMON AREA 26E
COMMON AREA 26F
COMMON AREA 26G
COMMON AREA 26H
COMMON AREA 26I
COMMON AREA 26J
COMMON AREA 26K
COMMON AREA 26L
COMMON AREA 26M
COMMON AREA 26N
COMMON AREA 26O
COMMON AREA 26P
COMMON AREA 26Q
COMMON AREA 26R
COMMON AREA 26S
COMMON AREA 26T
COMMON AREA 26U
COMMON AREA 26V
COMMON AREA 26W
COMMON AREA 26X
COMMON AREA 26Y
COMMON AREA 26Z
COMMON AREA 27A
COMMON AREA 27B
COMMON AREA 27C
COMMON AREA 27D
COMMON AREA 27E
COMMON AREA 27F
COMMON AREA 27G
COMMON AREA 27H
COMMON AREA 27I
COMMON AREA 27J
COMMON AREA 27K
COMMON AREA 27L
COMMON AREA 27M
COMMON AREA 27N
COMMON AREA 27O
COMMON AREA 27P
COMMON AREA 27Q
COMMON AREA 27R
COMMON AREA 27S
COMMON AREA 27T
COMMON AREA 27U
COMMON AREA 27V
COMMON AREA 27W
COMMON AREA 27X
COMMON AREA 27Y
COMMON AREA 27Z
COMMON AREA 28A
COMMON AREA 28B
COMMON AREA 28C
COMMON AREA 28D
COMMON AREA 28E
COMMON AREA 28F
COMMON AREA 28G
COMMON AREA 28H
COMMON AREA 28I
COMMON AREA 28J
COMMON AREA 28K
COMMON AREA 28L
COMMON AREA 28M
COMMON AREA 28N
COMMON AREA 28O
COMMON AREA 28P
COMMON AREA 28Q
COMMON AREA 28R
COMMON AREA 28S
COMMON AREA 28T
COMMON AREA 28U
COMMON AREA 28V
COMMON AREA 28W
COMMON AREA 28X
COMMON AREA 28Y
COMMON AREA 28Z
COMMON AREA 29A
COMMON AREA 29B
COMMON AREA 29C
COMMON AREA 29D
COMMON AREA 29E
COMMON AREA 29F
COMMON AREA 29G
COMMON AREA 29H
COMMON AREA 29I
COMMON AREA 29J
COMMON AREA 29K
COMMON AREA 29L
COMMON AREA 29M
COMMON AREA 29N
COMMON AREA 29O
COMMON AREA 29P
COMMON AREA 29Q
COMMON AREA 29R
COMMON AREA 29S
COMMON AREA 29T
COMMON AREA 29U
COMMON AREA 29V
COMMON AREA 29W
COMMON AREA 29X
COMMON AREA 29Y
COMMON AREA 29Z
COMMON AREA 30A
COMMON AREA 30B
COMMON AREA 30C
COMMON AREA 30D
COMMON AREA 30E
COMMON AREA 30F
COMMON AREA 30G
COMMON AREA 30H
COMMON AREA 30I
COMMON AREA 30J
COMMON AREA 30K
COMMON AREA 30L
COMMON AREA 30M
COMMON AREA 30N
COMMON AREA 30O
COMMON AREA 30P
COMMON AREA 30Q
COMMON AREA 30R
COMMON AREA 30S
COMMON AREA 30T
COMMON AREA 30U
COMMON AREA 30V
COMMON AREA 30W
COMMON AREA 30X
COMMON AREA 30Y
COMMON AREA 30Z
COMMON AREA 31A
COMMON AREA 31B
COMMON AREA 31C
COMMON AREA 31D
COMMON AREA 31E
COMMON AREA 31F
COMMON AREA 31G
COMMON AREA 31H
COMMON AREA 31I
COMMON AREA 31J
COMMON AREA 31K
COMMON AREA 31L
COMMON AREA 31M
COMMON AREA 31N
COMMON AREA 31O
COMMON AREA 31P
COMMON AREA 31Q
COMMON AREA 31R
COMMON AREA 31S
COMMON AREA 31T
COMMON AREA 31U
COMMON AREA 31V
COMMON AREA 31W
COMMON AREA 31X
COMMON AREA 31Y
COMMON AREA 31Z
COMMON AREA 32A
COMMON AREA 32B
COMMON AREA 32C
COMMON AREA 32D
COMMON AREA 32E
COMMON AREA 32F
COMMON AREA 32G
COMMON AREA 32H
COMMON AREA 32I
COMMON AREA 32J
COMMON AREA 32K
COMMON AREA 32L
COMMON AREA 32M
COMMON AREA 32N
COMMON AREA 32O
COMMON AREA 32P
COMMON AREA 32Q
COMMON AREA 32R
COMMON AREA 32S
COMMON AREA 32T
COMMON AREA 32U
COMMON AREA 32V
COMMON AREA 32W
COMMON AREA 32X
COMMON AREA 32Y
COMMON AREA 32Z
COMMON AREA 33A
COMMON AREA 33B
COMMON AREA 33C
COMMON AREA 33D
COMMON AREA 33E
COMMON AREA 33F
COMMON AREA 33G
COMMON AREA 33H
COMMON AREA 33I
COMMON AREA 33J
COMMON AREA 33K
COMMON AREA 33L
COMMON AREA 33M
COMMON AREA 33N
COMMON AREA 33O
COMMON AREA 33P
COMMON AREA 33Q
COMMON AREA 33R
COMMON AREA 33S
COMMON AREA 33T
COMMON AREA 33U
COMMON AREA 33V
COMMON AREA 33W
COMMON AREA 33X
COMMON AREA 33Y
COMMON AREA 33Z
COMMON AREA 34A
COMMON AREA 34B
COMMON AREA 34C
COMMON AREA 34D
COMMON AREA 34E
COMMON AREA 34F
COMMON AREA 34G
COMMON AREA 34H
COMMON AREA 34I
COMMON AREA 34J
COMMON AREA 34K
COMMON AREA 34L
COMMON AREA 34M
COMMON AREA 34N
COMMON AREA 34O
COMMON AREA 34P
COMMON AREA 34Q
COMMON AREA 34R
COMMON AREA 34S
COMMON AREA 34T
COMMON AREA 34U
COMMON AREA 34V
COMMON AREA 34W
COMMON AREA 34X
COMMON AREA 34Y
COMMON AREA 34Z
COMMON AREA 35A
COMMON AREA 35B
COMMON AREA 35C
COMMON AREA 35D
COMMON AREA 35E
COMMON AREA 35F
COMMON AREA 35G
COMMON AREA 35H
COMMON AREA 35I
COMMON AREA 35J
COMMON AREA 35K
COMMON AREA 35L
COMMON AREA 35M
COMMON AREA 35N
COMMON AREA 35O
COMMON AREA 35P
COMMON AREA 35Q
COMMON AREA 35R
COMMON AREA 35S
COMMON AREA 35T
COMMON AREA 35U
COMMON AREA 35V
COMMON AREA 35W
COMMON AREA 35X
COMMON AREA 35Y
COMMON AREA 35Z
COMMON AREA 36A
COMMON AREA 36B
COMMON AREA 36C
COMMON AREA 36D
COMMON AREA 36E
COMMON AREA 36F
COMMON AREA 36G
COMMON AREA 36H
COMMON AREA 36I
COMMON AREA 36J
COMMON AREA 36K
COMMON AREA 36L
COMMON AREA 36M
COMMON AREA 36N
COMMON AREA 36O
COMMON AREA 36P
COMMON AREA 36Q
COMMON AREA 36R
COMMON AREA 36S
COMMON AREA 36T
COMMON AREA 36U
COMMON AREA 36V
COMMON AREA 36W
COMMON AREA 36X
COMMON AREA 36Y
COMMON AREA 36Z
COMMON AREA 37A
COMMON AREA 37B
COMMON AREA 37C
COMMON AREA 37D
COMMON AREA 37E
COMMON AREA 37F
COMMON AREA 37G
COMMON AREA 37H
COMMON AREA 37I
COMMON AREA 37J
COMMON AREA 37K
COMMON AREA 37L
COMMON AREA 37M
COMMON AREA 37N
COMMON AREA 37O
COMMON AREA 37P
COMMON AREA 37Q
COMMON AREA 37R
COMMON AREA 37S
COMMON AREA 37T
COMMON AREA 37U
COMMON AREA 37V
COMMON AREA 37W
COMMON AREA 37X
COMMON AREA 37Y
COMMON AREA 37Z
COMMON AREA 38A
COMMON AREA 38B
COMMON AREA 38C
COMMON AREA 38D
COMMON AREA 38E
COMMON AREA 38F
COMMON AREA 38G
COMMON AREA 38H
COMMON AREA 38I
COMMON AREA 38J
COMMON AREA 38K
COMMON AREA 38L
COMMON AREA 38M
COMMON AREA 38N
COMMON AREA 38O
COMMON AREA 38P
COMMON AREA 38Q
COMMON AREA 38R
COMMON AREA 38S
COMMON AREA 38T
COMMON AREA 38U
COMMON AREA 38V
COMMON AREA 38W
COMMON AREA 38X
COMMON AREA 38Y
COMMON AREA 38Z
COMMON AREA 39A
COMMON AREA 39B
COMMON AREA 39C
COMMON AREA 39D
COMMON AREA 39E
COMMON AREA 39F
COMMON AREA 39G
COMMON AREA 39H
COMMON AREA 39I
COMMON AREA 39J
COMMON AREA 39K
COMMON AREA 39L
COMMON AREA 39M
COMMON AREA 39N
COMMON AREA 39O
COMMON AREA 39P
COMMON AREA 39Q
COMMON AREA 39R
COMMON AREA 39S
COMMON AREA 39T
COMMON AREA 39U
COMMON AREA 39V
COMMON AREA 39W
COMMON AREA 39X
COMMON AREA 39Y
COMMON AREA 39Z
COMMON AREA 40A
COMMON AREA 40B
COMMON AREA 40C
COMMON AREA 40D
COMMON AREA 40E
COMMON AREA 40F
COMMON AREA 40G
COMMON AREA 40H
COMMON AREA 40I
COMMON AREA 40J
COMMON AREA 40K
COMMON AREA 40L
COMMON AREA 40M
COMMON AREA 40N
COMMON AREA 40O
COMMON AREA 40P
COMMON AREA 40Q
COMMON AREA 40R
COMMON AREA 40S
COMMON AREA 40T
COMMON AREA 40U
COMMON AREA 40V
COMMON AREA 40W
COMMON AREA 40X
COMMON AREA 40Y
COMMON AREA 40Z
COMMON AREA 41A
COMMON AREA 41B
COMMON AREA 41C
COMMON AREA 41D
COMMON AREA 41E
COMMON AREA 41F
COMMON AREA 41G
COMMON AREA 41H
COMMON AREA 41I
COMMON AREA 41J
COMMON AREA 41K
COMMON AREA 41L
COMMON AREA 41M
COMMON AREA 41N
COMMON AREA 41O
COMMON AREA 41P
COMMON AREA 41Q
COMMON AREA 41R
COMMON AREA 41S
COMMON AREA 41T
COMMON AREA 41U
COMMON AREA 41V
COMMON AREA 41W
COMMON AREA 41X
COMMON AREA 41Y
COMMON AREA 41Z
COMMON AREA 42A
COMMON AREA 42B
COMMON AREA 42C
COMMON AREA 42D
COMMON AREA 42E
COMMON AREA 42F
COMMON AREA 42G
COMMON AREA 42H
COMMON AREA 42I
COMMON AREA 42J
COMMON AREA 42K
COMMON AREA 42L
COMMON AREA 42M
COMMON AREA 42N
COMMON AREA 42O
COMMON AREA 42P
COMMON AREA 42Q
COMMON AREA 42R
COMMON AREA 42S
COMMON AREA 42T
COMMON AREA 42U
COMMON AREA 42V
COMMON AREA 42W
COMMON AREA 42X
COMMON AREA 42Y
COMMON AREA 42Z
COMMON AREA 43A
COMMON AREA 43B
COMMON AREA 43C
COMMON AREA 43D
COMMON AREA 43E
COMMON AREA 43F
COMMON AREA 43G
COMMON AREA 43H
COMMON AREA 43I
COMMON AREA 43J
COMMON AREA 43K
COMMON AREA 43L
COMMON AREA 43M
COMMON AREA 43N
COMMON AREA 43O
COMMON AREA 43P
COMMON AREA 43Q
COMMON AREA 43R
COMMON AREA 43S
COMMON AREA 43T
COMMON AREA 43U
COMMON AREA 43V
COMMON AREA 43W
COMMON AREA 43X
COMMON AREA 43Y
COMMON AREA 43Z
COMMON AREA 44A
COMMON AREA 44B
COMMON AREA 44C
COMMON AREA 44D
COMMON AREA 44E
COMMON AREA 44F
COMMON AREA 44G
COMMON AREA 44H
COMMON AREA 44I
COMMON AREA 44J
COMMON AREA 44K
COMMON AREA 44L
COMMON AREA 44M
COMMON AREA 44N
COMMON AREA 44O
COMMON AREA 44P
COMMON AREA 44Q
COMMON AREA 44R
COMMON AREA 44S
COMMON AREA 44T
COMMON AREA 44U
COMMON AREA 44V
COMMON AREA 44W
COMMON AREA 44X
COMMON AREA 44Y
COMMON AREA 44Z
COMMON AREA 45A
COMMON AREA 45B
COMMON AREA 45C
COMMON AREA 45D
COMMON AREA 45E
COMMON AREA 45F
COMMON AREA 45G
COMMON AREA 45H
COMMON AREA 45I
COMMON AREA 45J
COMMON AREA 45K
COMMON AREA 45L
COMMON AREA 45M
COMMON AREA 45N
COMMON AREA 45O
COMMON AREA 45P
COMMON AREA 45Q
COMMON AREA 45R
COMMON AREA 45S
COMMON AREA 45T
COMMON AREA 45U
COMMON AREA 45V
COMMON AREA 45W
COMMON AREA 45X
COMMON AREA 45Y
COMMON AREA 45Z
COMMON AREA 46A
COMMON AREA 46B
COMMON AREA 46C
COMMON AREA 46D
COMMON AREA 46E
COMMON AREA 46F
COMMON AREA 46G
COMMON AREA 46H
COMMON AREA 46I
COMMON AREA 46J
COMMON AREA 46K
COMMON AREA 46L
COMMON AREA 46M
COMMON AREA 46N
COMMON AREA 46O
COMMON AREA 46P
COMMON AREA 46Q
COMMON AREA 46R
COMMON AREA 46S
COMMON AREA 46T
COMMON AREA 46U
COMMON AREA 46V
COMMON AREA 46W
COMMON AREA 46X
COMMON AREA 46Y
COMMON AREA 46Z
COMMON AREA 47A
COMMON AREA 47B
COMMON AREA 47C
COMMON AREA 47D
COMMON AREA 47E
COMMON AREA 47F
COMMON AREA 47G
COMMON AREA 47H
COMMON AREA 47I
COMMON AREA 47J
COMMON AREA 47K
COMMON AREA 47L
COMMON AREA 47M
COMMON AREA 47N
COMMON AREA 47O
COMMON AREA 47P
COMMON AREA 47Q
COMMON AREA 47R
COMMON AREA 47S
COMMON AREA 47T
COMMON AREA 47U
COMMON AREA 47V
COMMON AREA 47W
COMMON AREA 47X
COMMON AREA 47Y
COMMON AREA 47Z
COMMON AREA 48A
COMMON AREA 48B
COMMON AREA 48C
COMMON AREA 48D
COMMON AREA 48E
COMMON AREA 48F
COMMON AREA 48G
COMMON AREA 48H
COMMON AREA 48I
COMMON AREA 48J
COMMON AREA 48K
COMMON AREA 48L
COMMON AREA 48M
COMMON AREA 48N
COMMON AREA 48O
COMMON AREA 48P
COMMON AREA 48Q
COMMON AREA 48R
COMMON AREA 48S
COMMON AREA 48T
COMMON AREA 48U
COMMON AREA 48V
COMMON AREA 48W
COMMON AREA 48X
COMMON AREA 48Y
COMMON AREA 48Z
COMMON AREA 49A
COMMON AREA 49B
COMMON AREA 49C
COMMON AREA 49D
COMMON AREA 49E
COMMON AREA 49F
COMMON AREA 49G
COMMON AREA 49H
COMMON AREA 49I
COMMON AREA 49J
COMMON AREA 49K
COMMON AREA 49L
COMMON AREA 49M
COMMON AREA 49N
COMMON AREA 49O
COMMON AREA 49P
COMMON AREA 49Q
COMMON AREA 49R
COMMON AREA 49S
COMMON AREA 49T
COMMON AREA 49U
COMMON AREA 49V
COMMON AREA 49W
COMMON AREA 49X
COMMON AREA 49Y
COMMON AREA 49Z
COMMON AREA 50A
COMMON AREA 50B
COMMON AREA 50C
COMMON AREA 50D
COMMON AREA 50E
COMMON AREA 50F
COMMON AREA 50G
COMMON AREA 50H
COMMON AREA 50I
COMMON AREA 50J
COMMON AREA 50K
COMMON AREA 50L
COMMON AREA 50M
COMMON AREA 50N
COMMON AREA 50O
COMMON AREA 50P
COMMON AREA 50Q
COMMON AREA 50R
COMMON AREA 50S
COMMON AREA 50T
COMMON AREA 50U
COMMON AREA 50V
COMMON AREA 50W
COMMON AREA 50X
COMMON AREA 50Y
COMMON AREA 50Z
COMMON AREA 51A
COMMON AREA 51B
COMMON AREA 51C
COMMON AREA 51D
COMMON AREA 51E
COMMON AREA 51F
COMMON AREA 51G
COMMON AREA 51H
COMMON AREA 51I
COMMON AREA 51J
COMMON AREA 51K
COMMON AREA 51L
COMMON AREA 51M
COMMON AREA 51N
COMMON AREA 51O
COMMON AREA 51P
COMMON AREA 51Q
COMMON AREA 51R
COMMON AREA 51S
COMMON AREA 51T
COMMON AREA 51U
COMMON AREA 51V
COMMON AREA 51W
COMMON AREA 51X
COMMON AREA 51Y
COMMON AREA 51Z
COMMON AREA 52A
COMMON AREA 52B
COMMON AREA 52C
COMMON AREA 52D
COMMON AREA 52E
COMMON AREA 52F
COMMON AREA 52G
COMMON AREA 52H
COMMON AREA 52I
COMMON AREA 52J
COMMON AREA 52K
COMMON AREA 52L
COMMON AREA 52M
COMMON AREA 52N
COMMON AREA 52O
COMMON AREA 52P
COMMON AREA 52Q
COMMON AREA 52R
COMMON AREA 52S
COMMON AREA 52T
COMMON AREA 52U
COMMON AREA 52V
COMMON AREA 52W
COMMON AREA 52X
COMMON AREA 52Y
COMMON AREA 52Z
COMMON AREA 53A
COMMON AREA 53B
COMMON AREA 53C
COMMON AREA 53D
COMMON AREA 53E
COMMON AREA 53F
COMMON AREA 53G
COMMON AREA 53H
COMMON AREA 53I
COMMON AREA 53J
COMMON AREA 53K
COMMON AREA 53L
COMMON AREA 53M
COMMON AREA 53N
COMMON AREA 53O
COMMON AREA 53P
COMMON AREA 53Q
COMMON AREA 53R
COMMON AREA 53S
COMMON AREA 53T
COMMON AREA 53U
COMMON AREA 53V
COMMON AREA 53W
COMMON AREA 53X
COMMON AREA 53Y
COMMON AREA 53Z
COMMON AREA 54A
COMMON AREA 54B
COMMON AREA 54C
COMMON AREA 54D
COMMON AREA 54E
COMMON AREA 54F
COMMON AREA 54G
COMMON AREA 54H
COMMON AREA 54I
COMMON AREA 54J
COMMON AREA 54K
COMMON AREA 54L
COMMON AREA 54M
COMMON AREA 54N
COMMON AREA 54O
COMMON AREA 54P
COMMON AREA 54Q
COMMON AREA 54R
COMMON AREA 54S
COMMON AREA 54T
COMMON AREA 54U
COMMON AREA 54V
COMMON AREA 54W
COMMON AREA 54X
COMMON AREA 54Y
COMMON AREA 54Z
COMMON AREA 55A
COMMON AREA 55B
COMMON AREA 55C
COMMON AREA 55D
COMMON AREA 55E
COMMON AREA 55F
COMMON AREA 55G
COMMON AREA 55H
COMMON AREA 55I
COMMON AREA 55J
COMMON AREA 55K
COMMON AREA 55L
COMMON AREA 55M
COMMON AREA 55N
COMMON AREA 55O
COMMON AREA 55P
COMMON AREA 55Q
COMMON AREA 55R
COMMON AREA 55S
COMMON AREA 55T
COMMON AREA 55U
COMMON AREA 55V
COMMON AREA 55W
COMMON AREA 55X
COMMON AREA 55Y
COMMON AREA 55Z
COMMON AREA 56A
COMMON AREA 56B
COMMON AREA 56C
COMMON AREA 56D
COMMON AREA 56E
COMMON AREA 56F
COMMON AREA 56G
COMMON AREA 56H
COMMON AREA 56I
COMMON AREA 56J
COMMON AREA 56K
COMMON AREA 56L
COMMON AREA 56M
COMMON AREA 56N
COMMON AREA 56O
COMMON AREA 56P
COMMON AREA 56Q
COMMON AREA 56R
COMMON AREA 56S
COMMON AREA 56T
COMMON AREA 56U
COMMON AREA 56V
COMMON AREA 56W
COMMON AREA 56X
COMMON AREA 56Y
COMMON AREA 56Z
COMMON AREA 57A
COMMON AREA 57B
COMMON AREA 57C
COMMON AREA 57D
COMMON AREA 57E
COMMON AREA 57F
COMMON AREA 57G
COMMON AREA 57H
COMMON AREA 57I
COMMON AREA 57J
COMMON AREA 57K
COMMON AREA 57L
COMMON AREA 57M
COMMON AREA 57N
COMMON AREA 57O
COMMON AREA 57P
COMMON AREA 57Q
COMMON AREA 57R
COMMON AREA 57S
COMMON AREA 57T
COMMON AREA 57U
COMMON AREA 57V
COMMON AREA 57W
COMMON AREA 57X
COMMON AREA 57Y
COMMON AREA 57Z
COMMON AREA 58A
COMMON AREA 58B
COMMON AREA 58C
COMMON AREA 58D
COMMON AREA 58E
COMMON AREA 58F
COMMON AREA 58G
COMMON AREA 58H
COMMON AREA 58I
COMMON AREA 58J
COMMON AREA 58K
COMMON AREA 58L
COMMON AREA 58M
COMMON AREA 58N
COMMON AREA 58O
COMMON AREA 58P
COMMON AREA 58Q
COMMON AREA 58R
COMMON AREA 58S
COMMON AREA 58T
COMMON AREA 58U
COMMON AREA 58V
COMMON AREA 58W
COMMON AREA 58X
COMMON AREA 58Y
COMMON AREA 58Z
COMMON AREA 59A
COMMON AREA 59B
COMMON AREA 59C
COMMON AREA 59D
COMMON AREA 59E
COMMON AREA 59F
COMMON AREA 59G
COMMON AREA 59H
COMMON AREA 59I
COMMON AREA 59J
COMMON AREA 59K
COMMON AREA 59L
COMMON AREA 59M
COMMON AREA 59N
COMMON AREA 59O
COMMON AREA 59P
COMMON AREA 59Q
COMMON AREA 59R
COMMON AREA 59S
COMMON AREA 59T
COMMON AREA 59U
COMMON AREA 59V
COMMON AREA 59W
COMMON AREA 59X
COMMON AREA 59Y
COMMON AREA 59Z
COMMON AREA 60A
COMMON AREA 60B
COMMON AREA 60C
COMMON AREA 60D
COMMON AREA 60E
COMMON AREA 60F
COMMON AREA 60G
COMMON AREA 60H
COMMON AREA 60I
COMMON AREA 60J
COMMON AREA 60K
COMMON AREA 60L
COMMON AREA 60M
COMMON AREA 60N
COMMON AREA 60O
COMMON AREA 60P
COMMON AREA 60Q
COMMON AREA 60R
COMMON AREA 60S
COMMON AREA 60T
COMMON AREA 60U
COMMON AREA 60V
COMMON AREA 60W
COMMON AREA 60X
COMMON AREA 60Y
COMMON AREA 60Z
COMMON AREA 61A
COMMON AREA 61B
COMMON AREA 61C
COMMON AREA 61D
COMMON AREA 61E
COMMON AREA 61F
COMMON AREA 61G
COMMON AREA 61H
COMMON AREA 61I
COMMON AREA 61J
COMMON AREA 61K
COMMON AREA 61L
COMMON AREA 61M
COMMON AREA 61N
COMMON AREA 61O
COMMON AREA 61P
COMMON AREA 61Q
COMMON AREA 61R
COMMON AREA 61S
COMMON AREA 61T
COMMON AREA 61U
COMMON AREA 61V
COMMON AREA 61W
COMMON AREA 61X
COMMON AREA 61Y
COMMON AREA 61Z
COMMON AREA 62A
COMMON AREA 62B
COMMON AREA 62C
COMMON AREA 62D
COMMON AREA 62E
COMMON AREA 62F
COMMON AREA 62G
COMMON AREA 62H
COMMON AREA 62I
COMMON AREA 62J
COMMON AREA 62K
COMMON AREA 62L
COMMON AREA 62M
COMMON AREA 62N
COMMON AREA 62O
COMMON AREA 62P
COMMON AREA 62Q
COMMON AREA 62R
COMMON AREA 62S
COMMON AREA 62T
COMMON AREA 62U
COMMON AREA 62V
COMMON AREA 62W
COMMON AREA 62X
COMMON AREA 62Y
COMMON AREA 62Z
COMMON AREA 63A
COMMON AREA 63B
COMMON AREA 63C
COMMON AREA 63D
COMMON AREA 63E
COMMON AREA 63F
COMMON AREA 63G
COMMON AREA 63H
COMMON AREA 63I
COMMON AREA 63J
COMMON AREA 63K
COMMON AREA 63L
COMMON AREA 63M
COMMON AREA 63N
COMMON AREA 63O
COMMON AREA 63P
COMMON AREA 63Q
COMMON AREA 63R
COMMON AREA 63S
COMMON AREA 63T
COMMON AREA 63U
COMMON AREA 63V
COMMON AREA 63W
COMMON AREA 63X
COMMON AREA 63Y
COMMON AREA 63Z
COMMON AREA 64A
COMMON AREA 64B
COMMON AREA 64C
COMMON AREA 64D
COMMON AREA 64E
COMMON AREA 64F
COMMON AREA 64G
COMMON AREA 64H
COMMON AREA 64I
COMMON AREA 64J
COMMON AREA 64K
COMMON AREA 64L
COMMON AREA 64M
COMMON AREA 64N
COMMON AREA 64O
COMMON AREA 64P
COMMON AREA 64Q
COMMON AREA 64R
COMMON AREA 64S
COMMON AREA 64T

PDHD SITE PLAN
MOCKINGBIRD RIDGE

BEING A 302.39 ACRE TRACT OF LAND, SITUATED IN SECTION 18, BLOCK 38, T-1-S, A-734, T&P RY. CO. SURVEY, CITY OF MIDLAND, MIDLAND COUNTY, TEXAS.

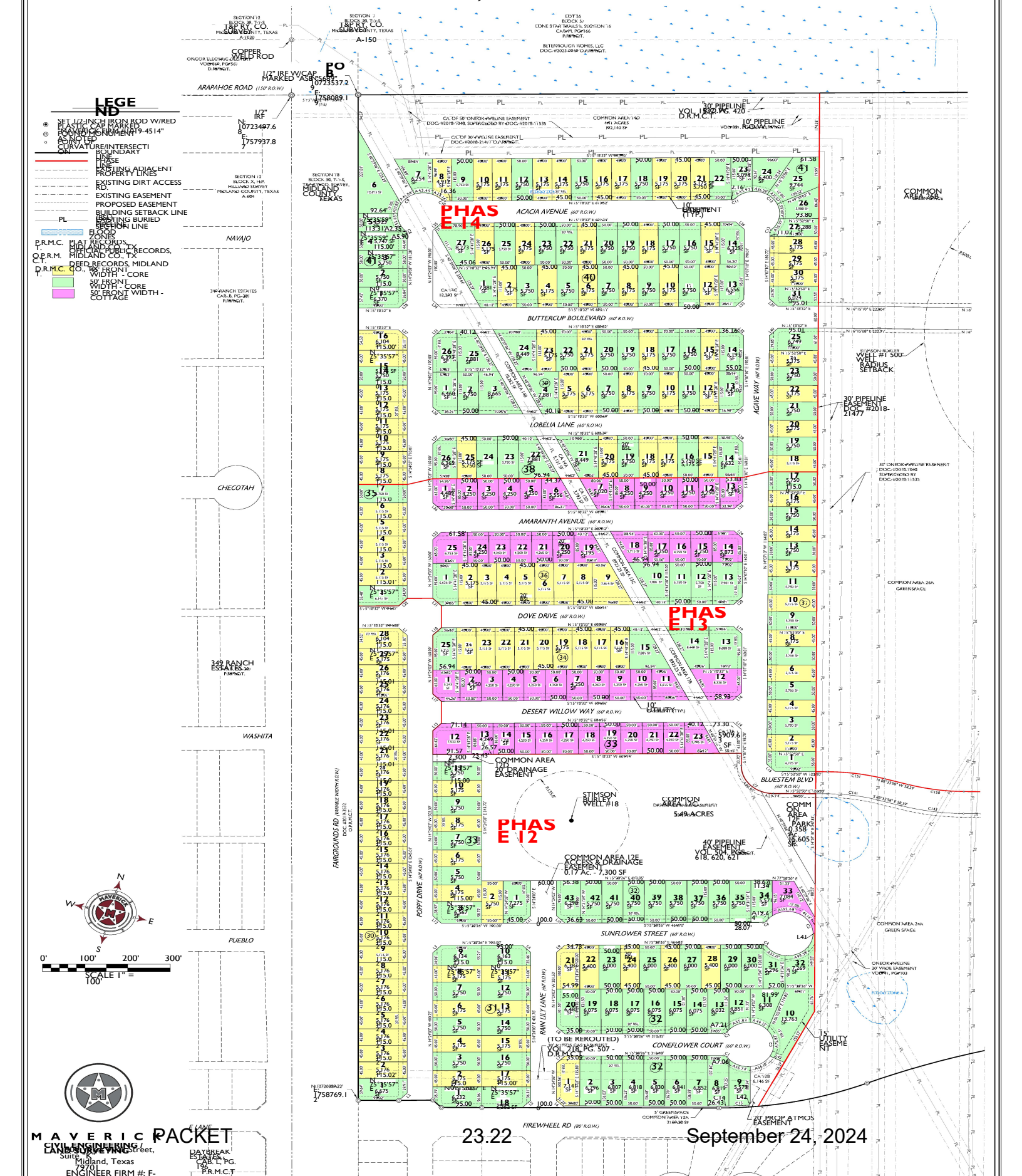

MAVERICK LAND SURVEYING
CIVIL ENGINEERING / LAND SURVEYING
Suite K
Midland, Texas 79701
ENGINEER FIRM #: F-15089
SURVEY FIRM #: 10194514
Tel: (432) 262-0999 Fax: (432) 262-0989
www.Maverick-Eng.com

PDHD SITE PLAN
MOCKINGBIRD RIDGE

BEING A 302.39 ACRE TRACT OF LAND, SITUATED IN SECTION 18, BLOCK 38, T-1-S, A-734, T&P RY. CO. SURVEY, CITY OF MIDLAND, MIDLAND COUNTY, TEXAS.

SCALE 1" = 100'

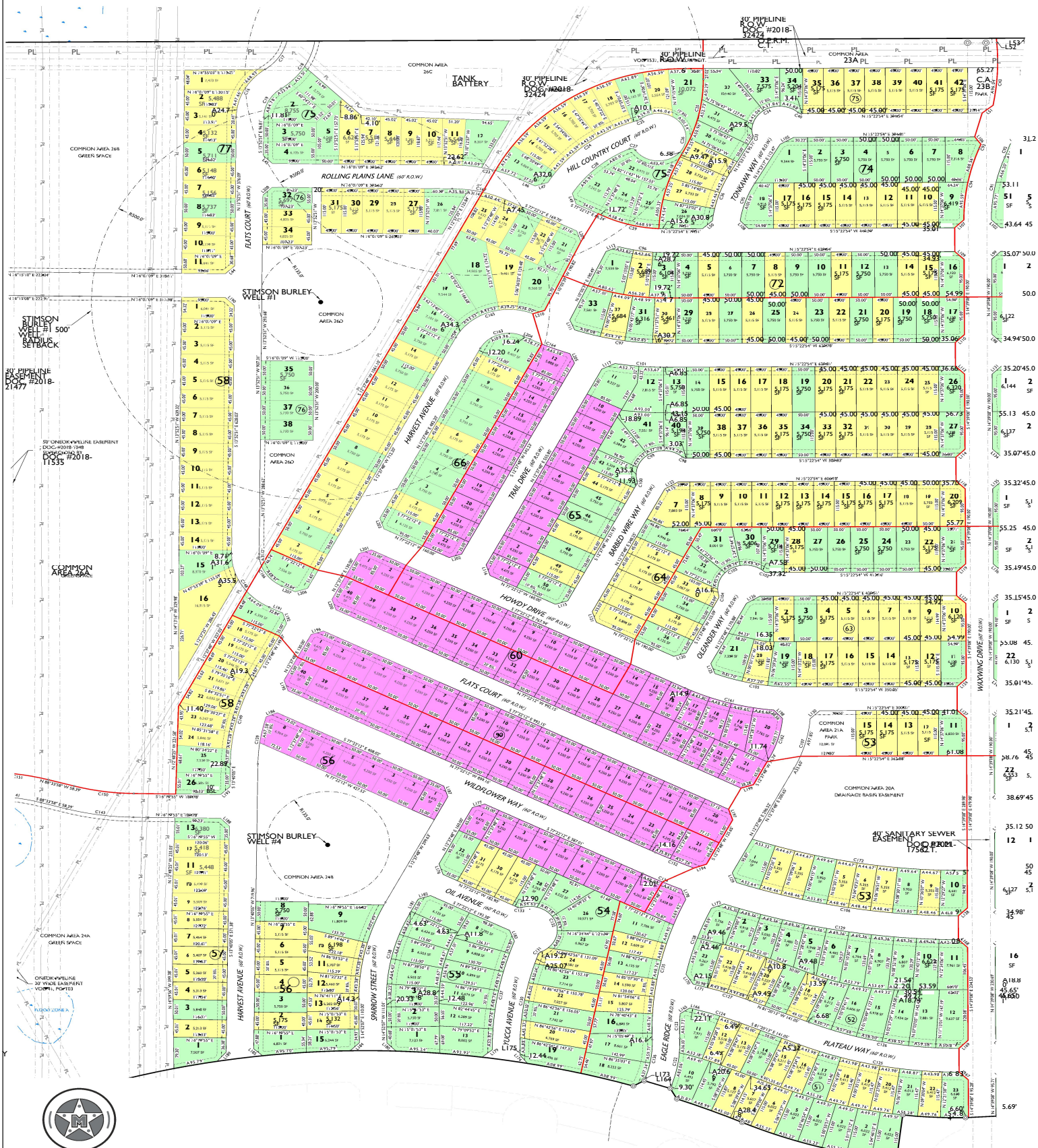

45' FRONT WIDTH - CORE
50' FRONT WIDTH - CORE
50' FRONT WIDTH - COTTAGE

MAVERICK CIVIL ENGINEERING / LAND SURVEYING
1909 West Wall Street, Suite K
Engineer Texas #: F-15080
SURVEY FIRM #: 10194514
Tel: (432) 262-0999 Fax: (432) 262-0989
www.Maverick-Eng.com

PACKET 23-23

September 24, 2024

PDHD SITE PLAN
MOCKINGBIRD RIDGE

BEING A 302.39 ACRE TRACT OF LAND, SITUATED IN SECTION 18, BLOCK 38, T-1-S, A-734, T&P RY. CO. SURVEY, CITY OF MIDLAND, MIDLAND COUNTY, TEXAS.



MAVERICK
CIVIL ENGINEERING / LAND SURVEYING
1909 West Wall Street, Suite "F"
Midland, Texas 7970
ENGINEER FIRM #: F-15089
SURVEY FIRM #: 10194514
Tel: (432) 262-0988 Fax: (432) 262-0989
www.Maverick-Eng.com

PDHD SITE PLAN

MOCKINGBIRD RIDGE

BEING A 302.39 ACRE TRACT OF LAND SITUATED IN SECTION 18, BLOCK 38, T-1-S, A-734, T&P RY. CO. SURVEY, CITY OF MIDLAND, MIDLAND COUNTY, TEXAS.

LINE TABLE

LINE	BEARING	DISTANCE
L1	S 29°32'45" W	28.21'
L2	N 60°27'15" W	28.25'
L3	S 30°39'57" W	28.32'
L4	N 59°20'03" W	28.25'
L5	N 30°32'12" E	28.28'
L6	S 59°27'48" E	28.30'
L7	S 30°32'12" W	28.32'
L8	S 30°39'58" W	28.25'
L9	N 59°20'02" W	28.32'
L10	N 59°18'05" W	28.25'
L11	N 30°32'12" E	28.32'
L12	S 59°27'48" E	28.25'
L13	N 30°32'12" E	28.36'
L14	S 59°27'48" E	28.14'
L15	N 30°32'12" E	28.27'
L16	S 59°27'48" E	28.43'
L17	N 30°32'12" E	28.21'
L18	S 59°32'45" E	28.36'
L19	N 30°27'48" E	28.14'
L20	S 60°27'15" E	28.43'
L21	S 29°32'12" W	28.21'
L22	S 60°24'19" E	28.36'
L23	S 30°27'48" E	28.14'
L24	S 60°27'15" E	28.43'
L25	N 30°27'15" E	28.14'
L26	S 60°27'15" E	28.43'
L27	S 29°24'19" W	28.21'
L28	S 30°35'41" W	28.36'
L29	N 59°24'19" W	28.14'
L30	S 29°32'45" W	28.43'
L31	N 60°27'15" W	28.21'
L32	N 30°27'15" E	28.36'
L33	S 59°32'45" E	28.14'
L34	S 29°24'19" W	28.43'
L35	S 30°35'41" W	28.21'
L36	N 59°24'19" W	28.36'
L37	N 29°32'45" E	28.14'
L38	N 60°27'15" W	28.43'
L39	S 29°32'45" W	28.21'
L40	N 60°27'15" W	28.36'
L41	S 29°32'45" W	28.14'
L42	S 29°24'19" W	4.52'
L43	N 14°30'41" W	4.82
L44	N 60°27'15" W	38.40'
L45	S 29°32'45" W	28.28
L46	S 60°27'15" E	28.28
L47	S 29°32'45" W	28.28
L48	N 60°27'15" W	37.55
L49	S 29°27'22" W	28.69
L50	S 59°24'19" W	28.28
L51	N 29°24'19" E	25.00
L52	N 28°26'56" E	27.79
L53	S 29°32'45" W	29.47
L54	S 31°22'55" W	25.59
L55	S 60°27'15" E	30.97
L56	S 32°50'11" W	11.25
L57	S 29°24'19" W	25.00
L58	S 16°07'22" W	29.39
L59	N 60°35'41" E	7.54
L60	N 28°52'38" E	28.93
L61	N 60°27'15" W	35.49
L62	S 29°32'45" W	28.28
L63	S 12°53'44" W	27.67
L64	N 29°32'45" E	26.82
L65	S 60°27'15" E	28.28
L66	S 00°22'54" W	29.72
L67	N 89°21'32" W	40.13
L68	S 25°56'31" W	26.80
L69	S 20°15'31" W	28.28
L70	N 60°09'29" W	22.91
L71	N 29°42'17" E	28.28
L72	S 29°54'26" W	27.98
L73	S 29°38'07" W	28.28
L74	S 29°38'07" W	28.21
L75	N 60°26'41" W	29.13
L76	N 29°38'01" E	51.93
L77	S 60°34'21" E	27.84
L78	S 29°37'43" W	27.82
L79	S 60°03'59" E	28.62
L80	S 29°26'30" W	28.28
L81	S 26°49'31" W	28.08
L82	S 60°07'38" E	28.29
L83	N 29°52'22" E	27.67
L84	N 60°07'38" W	28.47
L85	S 29°52'22" W	28.28
L86	N 30°19'07" W	27.34
L87	N 29°52'22" E	27.96
L88	N 60°07'38" W	28.28
L89	S 29°19'05" E	28.28
L90	S 60°40'55" E	9.15'
L91	S 25°22'54" E	28.29
L92	S 60°22'54" E	28.28
L93	S 23°49'11" E	28.28
L94	S 26°40'02" E	28.28
L95	S 75°22'54" E	28.29
L96	N 60°22'54" W	28.29
L97	N 30°22'54" W	32.24
L98	N 63°50'03" E	28.28
L99	N 30°22'54" W	34.55
L100	S 25°10'51" W	23.19
L101	N 29°52'22" W	28.28
L102	N 60°07'38" W	26.76
L103	S 29°38'07" E	28.29
L104	N 60°21'53" W	28.28
L105	N 29°38'07" W	27.31
L106	S 26°38'46" E	29.81
L107	S 60°37'06" E	28.29
L108	S 29°38'07" E	28.28
L109	S 29°38'07" E	32.03
L110	S 60°38'07" E	28.29
L111	N 29°21'53" W	28.28
L112	N 29°38'07" W	28.28
L113	N 60°21'53" W	28.28
L114	S 29°38'07" E	28.29
L115	N 60°21'53" W	28.28
L116	N 29°38'07" W	28.29
L117	S 60°21'53" E	28.28
L118	S 29°38'07" E	28.29
L119	S 60°21'53" E	28.28
L120	S 29°38'07" E	28.29
L121	S 60°21'53" E	28.28
L122	S 29°38'07" E	28.29
L123	S 60°21'53" E	28.28
L124	S 29°38'07" E	28.28
L125	S 60°21'53" E	28.28
L126	S 29°38'07" E	28.28
L127	S 60°21'53" E	28.28

LINE TABLE

LINE	BEARING	DISTANCE
L128	S 30°25'02" W	28.25'
L129	S 59°34'58" E	26.47'
L130	N 30°36'36" W	28.94'
L131	N 30°21'53" E	28.28'
L132	S 59°38'07" E	28.28'
L133	S 30°12'54" W	28.28'
L134	N 59°38'07" W	28.29'
L135	N 30°21'53" E	28.28'
L136	E	28.28'
L137	S 30°22'54" W	28.28'
L138	N 59°38'07" W	28.29'
L139	N 30°21'53" E	28.28'
L140	E	28.28'
L141	S 30°22'54" W	28.28'
L142	N 59°38'07" W	28.29'
L143	N 30°21'53" E	28.28'
L144	E	28.45'
L145	S 30°22'54" W	26.56'
L146	N 59°38'07" W	28.29'
L147	N 30°21'53" E	28.28'
L148	E	29.55'
L149	S 62°15'07" E	14.97'
L150	S 06°39'06" W	28.88'
L151	S 29°38'07" E	28.29'
L152	S 60°49'03" E	26.47'
L153	E	8.19'
L154	N 29°21'53" E	30.62
L155	S 25°22'54" W	34.17'
L156	S 60°37'06" E	24.85
L157	E	
L158	N 44°43'05" W	27.43'
L159	S 29°38'07" E	14.97'
L160	E	
L161	S 60°49'03" E	28.55
L162	N 29°21'53" E	29.46
L163	E	
L164	S 34°47'05" E	25.06
L165	E	
L166	N 60°30'29" W	28.28
L167	E	28.10
L168	S 29°32'45" W	28.10
L169	S 40°33'12" W	29.82
L170	N 48°38'07" W	28.49
L171	S 29°38'07" E	29.54
L172	S 60°21'53" E	26.35'
L173	S 29°38'07" E	30.98
L174	S 53°29'08" E	12.44'
L175	N 29°38'07" W	28.28
L176	N 60°21'53" W	28.28
L177	S 29°38'07" E	28.28
L178	S 60°21'53" E	27.62
L179	S 29°38'07" E	29.43'
L180	E	28.81'
L181	S 58°47'59" W	39.63'
L182	N 29°38'07" W	28.28
L183	E	29.74'
L184	S 29°38'07" E	28.34'
L185	E	26.34'
L186	S 60°21'53" E	25.94'
L187	E	28.28'
L188	S 29°38'07" E	28.28'
L189	S 32°22'12" W	30.64'
L190	S 60°21'53" E	28.28'
L191	S 29°38'07" E	32.84'
L192	S 60°21'53" E	28.28'
L193	S 77°22'12" W	28.28'
L194	S 29°38'07" E	29.26'
L195	S 60°21'53" E	28.28'
L196	N 29°38'07" W	28.28'
L197	S 60°21'53" E	28.28'
L198	S 29°38'07" E	28.56'
L199	S 32°22'12" W	28.28'
L200	S 29°38'07" E	28.28'
L201	N 57°37'48" E	28.28'
L202	S 29°38'07" E	28.28'
L203	S 60°21'53" E	16.24'
L204	S 77°22'12" W	25.93'
L205	S 29°38'07" E	28.28'
L206	N 60°21'53" W	28.28'
L207	E	32.84'
L208	N 29°38'07" W	28.28'
L209	E	28.90'
L210	S 29°38'07" E	27.39'
L211	S 32°25'28" W	89.83'
L212	E	85.79'
L213	S	84.99'
L214	S 28°49'13" E	84.98'
L215	S	84.98'
L216	S 25°12'58" E	84.98'
L217	S	84.99'
L218	S 31°36'43" E	85.11'
L219	E	84.94'
L220	S 28°00'29" E	84.85'
L221	S	84.83'
L222	S 29°02'14" E	84.89'
L223	S	85.00'
L224	S 29°02'14" E	85.00'
L225	S 20°47'59" E	85.00'
L226	S 27°24'02" W	83.00'
L227	S 29°02'14" E	83.00'
L228	S 22°52'23" E	83.00'
L229	S 32°50'42" E	83.00'
L230	S 29°02'14" E	83.00'
L231	S 36°05'02" W	83.00'
L232	S 27°02'52" E	85.00'
L233	S 36°21'53" W	85.25'
L234	S 29°38'07" E	84.99'
L235	S 36°21'53" W	84.98'
L236	S 36°21'53" W	84.97'
L237	S 36°21'53" W	84.96'
L238	S 36°21'53" W	85.00'
L239	S 34°38'24" E	85.00'
L240	E	85.00'
L241	S 26°03'38" W	85.00'
L242	S 23°12'53" W	104.9
L243	N 20°22'09" W	93.90'
L244	N 29°38'07" W	86.74'
L245	N 26°15'58" W	85.02'
L246	N 29°15'03" W	85.03'
L247	N 36°21'53" W	85.13'
L248	N 36°21'53" W	85.18'
L249	N 36°21'53" W	
L250	N 36°02'08" W	
L251	N 33°24'25" W	
L252	N 30°46'42" W	

LINE TABLE

LINE	BEARING	DISTANCE
L253	N 28°08'59" W	85.18'
L254	N 31°11'16" W	85.13'
L255	N 33°59'33" W	85.03'
L256	N 22°53'33" W	84.88'
L257	N 20°15'50" W	112.15
L258	N 21°51'04" W	104.20
L259	N 29°40'29" W	94.53'
L260	N 36°21'53" W	87.23'
L261	N 36°21'53" W	85.00'
L262	N 36°18'43" W	84.99'
L263	N 33°59'33" W	84.99'
L264	N 27°02'08" W	85.00'
L265	N 29°21'17" W	85.00'
L266	N 24°43'00" W	84.62'
L267	N 24°43'00" W	84.79'
L268	N 22°23'55" W	84.92'
L269	N 20°04'19" W	84.99'
L270	N 19°51'52" W	85.02'
L271	N 21°53'40" W	85.10'
L272	N 20°10'58" W	115.00'
L273	N 24°07'23" W	27.62'
L274	N 29°38'07" W	29.30'
L275	N 60°21'53" W	85.01'
L276	N 29°38'07" W	85.00'
L277	N 60°21'53" W	62.11'
L278	N 29°38'07" W	85.00'
L279	N 60°21'53" W	85.04'
L280	N 29°38'07" W	72.90'
L281	N 60°21'53" W	86.13'
L282	N 29°38'07" W	85.70'
L283	N 60°21'53" W	85.38'
L284	N 29°38'07" W	78.94'
L285	N 60°21'53" W	28.28'
L286	N 29°38'07" W	115.00'
L287	N 60°21'53" W	7.06'
L288	S 29°38'07" E	115.0
L289	S 60°21'53" E	60.27'
L290	S 81°18'37" W	114.6
L291	S 29°38'07" E	46.14'
L292	S 60°21'53" E	15.51'
L293	S 77°37'18" E	72.42'

CURVE TABLE

CURVE	ARC LENGTH	RADIUS	CHORD LENGTH	CHORD BEARING	DELTA ANGLE
C1	55.08'	70.00'	53.68'	S 51° 40' 26" E	45°05'57"
C2	290°17'5	60.00'	68.57'	S 59° 24' 19" E	303.9
C3	55°08'5	70.00'	9.26'	S 09° 30' 05" W	9.63'
C4	55°09'0	70.00'	68.57'	S 74° 59' 39" W	304.0
C5	290°18'0	60.00'	9.26'	S 72° 45' 27" W	9.63'
C6	55°09'0	70.00'	8.03'	N 13° 06' 17" E	8.25'
C7	90°00'0	5.00'	7.07'	N 19° 11' 49" W	90°00'0
C8	47°16'0	70.00'	57.23'	S 17° 00' 25" W	47°16'0
C9	184°14'4	475.00'	367.65'	S 13° 06' 17" E	184°14'4
C10	42°16'0	70.00'	41.46'	S 09° 38' 17" W	42°16'0
C11	125°06'2	70.00'	101.48'	S 46° 09'5	125°06'2
C12	47°16'0	70.00'	57.23'	S 37° 16' 43" W	47°16'0
C13	90°00'0	5.00'	7.07'	S 44° 38' 28" E	90°00'0
C14	184°14'4	475.00'	367.65'	S 13° 06' 17" E	184°14'4
C15	47.87'	475.00'	47.86'	S 00° 38' 09" E	5°46'5
C16	141.3	815.0	136.1	N 89° 22' 29" E	9°56'0
C17	87.56'	150.0	85.63'	N 36° 47' 39" W	33°27'5
C18	145.0	120.0	141.1	N 46° 39' 28" E	69°14'0
C19	84.78'	480.0	81.68'	S 06° 00' 03" E	10°07'1
C20	195.2	330.0	193.3	N 86° 37' 03" E	33°53'0
C21	152.6	350.0	151.3	N 86° 37' 03" E	25°00'0
C22	885.9	60.00	739.6	S 33° 28' 51" W	846°2
C23	47.21'	70.00'	46.31'	S 11° 56' 56" E	38°38'3
C24	171.0	290.0	168.5	N 89° 00' 21" E	33°47'0
C25	142.6	300.0	141.3	N 06° 35' 26" W	27°14'5
C26	153.3	60.00	114.9	N 45° 08' 06" E	146°24'3
C27	131.6	330.0	130.7	N 10° 27' 22" E	22°51'3
C28	7.85'	5.00'	7.07'	S 83° 08' 23" E	90°00'0
C29	163.2	675.0	162.8	N 11° 28' 21" W	13°51'3
C30	7.92'	5.00'	7.11'	S 11° 56' 56" E	90°48'3
C31	189.2	60.00	120.0	N 52° 42' 20" E	180°42'1
C32	7.92'	5.00'	7.11'	S 59° 37' 06" E	90°48'3
C33	200.2	1430.0	200.0	S 08° 03' 28" W	8°01'2
C34	7.92'	5.00'	7.11'	S 30° 17' 30" E	90°48'3
C35	189.2	60.00	120.0	S 30° 22' 54" W	180°42'1
C36	7.92'	5.00'	7.11'	S 59° 37' 06" E	90°48'3
C37	52.86'	500.00'	52.83'	S 54° 34' 48" W	6°03'1
C38	172.5	2295.0	172.4	N 81° 56' 23" W	4°18'2
C39	167.9	2235.0	167.9	N 67° 08' 48" E	4°18'2
C40	57.23'	60.00'	57.21'	N 48° 28' 52" E	54°38'0
C41	250.3	560.00	248.1	S 69° 50' 09" E	25°36'5
C42	161.1	550.00	158.6	S 03° 51' 01" W	16°47'0
C43	920.4	260.00	897.6	S 15° 47' 13" E	202°9'0
C44	154.2	1190.0	153.7	S 16° 40' 24" E	7°25'3
C45	155.8	880.00	155.6	N 16° 40' 24" W	10°08'5
C46	7.79'	5.00'	7.07'	N 15° 53' 55" W	89°12'2
C47	196.3	980.00	196.0	S 58° 26' 26" W	11°28'3
C48	7.85'	5.00'	7.07'	S 31° 54' 38" E	90°00'0
C49	222.7	880.00	222.1	S 38° 16' 55" E	14°29'5
C50	183.7	630.00	183.0	N 41° 03' 55" E	16°42'1
C51	862.6	1110.0	841.1	N 26° 56' 14" E	44°31'4
C52	344.1	715.00	340.8	S 31° 54' 13" E	27°34'5
C53	298.5	630.00	295.8	N 44° 29' 19" E	27°09'2
C54	145.3	820.00	145.2	N 41° 50' 54" E	10°09'3
C55	299.9	970.00	298.7	N 11° 00' 40" W	12°46'2
C56	375.5	775.00	371.8	N 62° 09' 28" W	27°45'4
C57	132.7	970.00	132.6	N 37° 44' 10" W	7°50'1
C58	160.5	720.00	160.2	N 57° 27' 41" E	12°46'4
C59	201.1	530.00	199.9	S 42° 25' 02" E	21°44'4
C60	367.2	1174.9	365.8	S 27° 15' 39" W	17°54'5
C61	318.5	1030.0	317.3	S 19° 11' 10" W	17°43'0
C62	385.6	1234.9	384.0	N 57° 59' 40" E	17°53'3
C63	178.3	470.00	177.3	S 58° 17' 23" W	21°44'4
C64	186.9	530.00	185.9	N 40° 09' 23" W	20°12'2
C65	96.75'	1430.0	96.73'	N 62° 29' 58" E	3°52'3
C66	166.9	60.00	116.5	S 57° 51' 26" W	159°3
C67	18.47'	470.00	18.47'	S 57° 33' 16" W	2°15'0
C68	7.69'	5.00'	6.96'	N 62° 29' 58" E	88°05'5
C69	11.89'	470.00	11.89'	N 23° 55' 40" W	1°27'0
C70	183.3	470.00	182.3	N 64° 30' 30" E	22°21'4
C71	190.3	615.00	189.5	N 62° 35' 26" E	17°43'0
C72	191.4	530.00	190.4	S 62° 29' 46" W	20°41'4
C73	294.1	270.00	279.4	S 62° 34' 54" W	62°24'2
C74	7.57'	360.00	7.25'	S 64° 30' 16" W	1°12'0
C75	180.4	780.00	180.0	N 65° 16' 42" E	13°14'0
C76	44.45'	590.00	44.38'	S 57° 06' 48" W	4°19'0
C77	73.18'	10.00'	73.17'	S 57° 06' 48" W	419°2
C78	117.5	1295.6	116.6	S 58° 00' 53" W	5°11'5
C79	24.72'	270.00'	24.70'	S 54° 15' 53" W	5°14'5
C80	152.8	170.00	152.7	N 03° 58' 20" W	51°30'0
C81	140.6	1030.0	140.5	S 05° 05' 40" E	7°49'3
C82	119.0	1040.0	118.9	S 08° 00' 03" E	6°33'1
C83	244.4	820.00	244.0	N 44° 44' 42" W	17°04'3
C84	143.7	1235.6	142.5	S 03° 59' 11" E	6°39'5
C85	83.15'	330.00	83.13'	N 04° 11' 11" W	14°26'0
C86	11.91'	11.91'	11.91'	N 83° 45' 22" E	57°02'0
C87	467.2	1295.6	460.9	S 85° 18' 34" W	20°39'0
C88	118.6	230.00	117.9	N 83° 03' 35" W	29°32'0
C89	63.28'	820.00	63.26'	S 44° 00' 21" W	4°25'0
C90	91.75'	330.00	91.69'	S 08° 55' 38" E	15°55'5
C91	189.2	60.00	119.8	N 80° 22' 19" E	180°42'1
C92	7.85'	5.00'	7.07'	S 08° 55' 38" E	90°00'0
C93	364.2	1530.0	363.3	N 83° 03' 04" W	13°38'0
C94	7.85'	5.00'	7.07'	S 81° 04' 22" E	90°00'0
C95	8.21'	780.00	8.21'	S 85° 29' 04" W	0°36'1
C96	225.5	780.00	224.7	S 08° 55' 38" E	16°33'5
C97	447.5	470.00	446.3	S 86° 26' 57" W	54°33'5
C98	8.21'	720.00	7.98'	S 85° 29' 04" W	0°39'1
C99		1530.0		N 01° 13' 07" E	
C100		720.00		S 71° 23' 13" W	
C101		10.00'		S 22° 38' 55" E	

CURVE TABLE

CURVE	ARC LENGTH	RADIUS	CHORD LENGTH	CHORD BEARING	DELTA ANGLE
C139	121.2'	440.00'	120.8'	N 05° 44' 53" W	15°47'2
C140	251.9'	530.00'	249.6'	S 01° 07' 26" E	27°29'5
C141	119.0'	440.00'	118.7'	N 83° 39' 26" E	15°29'1
C142	147.6'	560.00'	147.1'	N 83° 52' 58" E	15°06'0
C143	166.2'	150.00'	157.8'	S 45° 37' 31" E	63°29'2
C144	227.4'	500.00'	225.4'	S 00° 31' 08" E	26°17'5
C145	292.8'	291.6'	280.4'	S 83° 52' 58" E	57°32'4
C146	193.7'	500.00'	192.5'	S 83° 39' 26" W	22°12'3
C147	109.8'	650.0'	109.7'	N 79° 11' 03" W	9°40'5
C148	99.73'	470.00'	99.59'	N 83° 52' 58" E	12°09'3
C149	94.35'	130.0'	92.33'	S 88° 20' 06" E	41°35'0
C150	99.73'	470.00'	99.59'	N 83° 52' 58" E	12°09'3
C151	274.9'	270.00'	263.8'	S 01° 37' 33" W	58°20'0
C152	43.87'	315.00'	43.83'	N 57° 37' 48" E	7°58'4
C153	81.31'	70.00'	77.08'	S 81° 31' 41" E	66°32'5
C154	478.1'	315.34'	435.7'	N 48° 46' 42" W	86°51'0
C155	50.29'	1355.0'	50.29'	N 24° 02' 42" W	2°07'3
C156	93.14'	60.00'	84.07'	S 85° 56' 37" W	88°56'0
C157	99.14'	650.00'	88.24'	S 69° 37' 12" W	8°44'5
C158	382.1'	370.00'	380.9'	S 74° 37' 31" W	59°09'2
C159	121.8'	440.00'	121.2'	N 05° 44' 53" W	15°50'2
C160	254.3'	530.00'	251.9'	S 01° 07' 26" E	27°29'5
C161	119.4'	440.00'	119.0'	N 83° 39' 26" E	15°33'1
C162	147.6'	560.00'	147.1'	N 83° 52' 58" E	15°06'0
C163	166.2'	150.00'	157.8'	S 45° 37' 31" E	63°29'2
C164	227.4'	500.00'	227.4'	S 00° 31' 08" E	26°17'5
C165	292.8'	291.6'	280.4'	S 83° 52' 58" E	57°32'4
C166	193.7'	500.00'	192.5'	S 83° 39' 26" W	22°12'3
C167	109.8'	650.0'	109.7'	N 79° 11' 03" W	9°40'5
C168	99.73'	470.00'	99.59'	N 83° 52' 58" E	12°09'3
C169	94.35'	130.0'	92.33'	S 88° 20' 06" E	41°35'0
C170	99.73'	470.00'	99.59'	N 83° 52' 58" E	12°09'3
C171	274.9'	270.00'	263.8'	S 01° 37' 33" W	58°20'0
C172	43.87'	315.00'	43.83'	N 57° 37' 48" E	7°58'4
C173	81.31'	70.00'	77.08'	S 81° 31' 41" E	66°32'5
C174	478.1'	315.34'	435.7'	N 48° 46' 42" W	86°51'0
C175	50.29'	1355.0'	50.29'	N 24° 02' 42" W	2°07'3
C176	93.14'	60.00'	84.07'	S 85° 56' 37" W	88°56'0
C177	99.14'	650.00'	88.24'	S 69° 37' 12" W	8°44'5
C178	382.1'	370.00'	380.9'	S 74° 37' 31" W	59°09'2
C179	121.8'	440.00'	121.2'	N 05° 44' 53" W	15°50'2
C180	254.3'	530.00'	251.9'	S 01° 07' 26" E	27°29'5
C181	119.4'	440.00'	119.0'	N 83° 39' 26" E	15°33'1
C182	147.6'	560.00'	147.1'	N 83° 52' 58" E	15°06'0
C183	166.2'	150.00'	157.8'	S 45° 37' 31" E	63°29'2
C184	227.4'	500.00'	227.4'	S 00° 31' 08" E	26°17'5
C185	292.8'	291.6'	280.4'	S 83° 52' 58" E	57°32'4
C186	193.7'	500.00'	192.5'	S 83° 39' 26" W	22°12'3
C187	109.8'	650.0'	109.7'	N 79° 11' 03" W	9°40'5
C188	99.73'	470.00'	99.59'	N 83° 52' 58" E	12°09'3
C189	94.35'	130.0'	92.33'	S 88° 20' 06" E	41°35'0
C190	99.73'	470.00'	99.59'	N 83° 52' 58" E	12°09'3
C191	274.9'	270.00'	263.8'	S 01° 37' 33" W	58°20'0
C192	43.87'	315.00'	43.83'	N 57° 37' 48" E	7°58'4
C193	81.31'	70.00'	77.08'	S 81° 31' 41" E	66°32'5
C194	478.1'	315.34'	435.7'	N 48° 46' 42" W	86°51'0
C195	50.29'	1355.0'	50.29'	N 24° 02' 42" W	2°07'3
C196	93.14'	60.00'	84.07'	S 85° 56' 37" W	88°56'0
C197	99.14'	650.00'	88.24'	S 69° 37' 12" W	8°44'5
C198	382.1'	370.00'	380.9'	S 74° 37' 31" W	59°09'2
C199	121.8'	440.00'	121.2'	N 05° 44' 53" W	15°50'2
C200	254.3'	530.00'	251.9'	S 01° 07' 26" E	27°29'5
C201	119.4'	440.00'	119.0'	N 83° 39' 26" E	15°33'1

MAVERICK
CIVIL ENGINEERING / LAND SURVEYING
1909 West Wall Street, Suite "A"
Midland, Texas 79701
ENGINEER FIRM #: F-15089
SURVEY FIRM #: 10194514
Tel: (432) 262-0883
Fax: (432) 262-0888
www.Maverick-Eng.com

PDHD SITE PLAN

MOCKINGBIRD RIDGE

BEING A 302.39 ACRE TRACT OF LAND, SITUATED IN SECTION 18, BLOCK 38, T-1-S, A-734 T&P RY. CO. SURVEY, CITY OF MIDLAND, MIDLAND COUNTY, TEXAS.

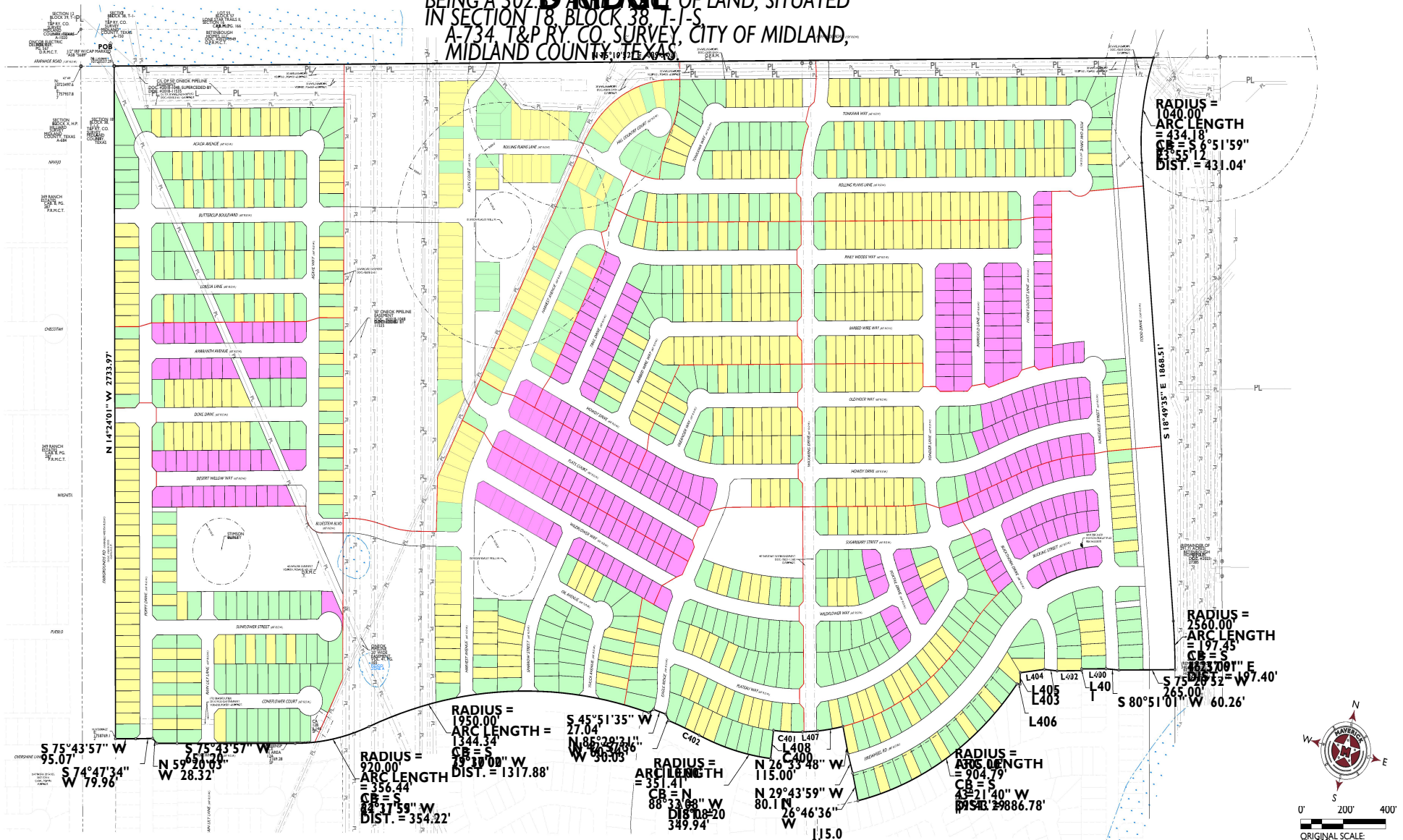

FIELD NOTE DESCRIPTION

BEING A DESCRIPTION OF A 302.39 ACRE TRACT OF LAND, SITUATED IN SECTION 18, BLOCK 38, TOWNSHIP 1 SOUTH, ABSTRACT NUMBER 734, GLO FILE NUMBER 96103, TEXAS and PACIFIC RAILWAY COMPANY SURVEY, MIDLAND COUNTY, TEXAS, AND BEING A PORTION OF THAT SAME TRACT CALLED FOR IN DOCUMENT NUMBER 2018 20726 OF THE OFFICIAL PUBLIC RECORDS OF MIDLAND COUNTY, TEXAS, AND BEING MORE PARTICULARLY DESCRIBED AS FOLLOWS;

BEGINNING AT A POINT BEING THE NORTHEAST CORNER OF THE HEREIN DESCRIBED TRACT, SAME BEING THE NORTHEAST CORNER OF THE 22.96 ACRE TRACT DESCRIBED IN DOCUMENT NUMBER 20195332 OF SAID PUBLIC RECORDS, FROM WHICH A ONE HALF INCH IRON ROD FOUND AT A FENCE CORNER AND ACCEPTED AS BEING IN THE POSITION OF THE NORTHEAST CORNER OF SAID SECTION 18 BEARS N 75°19'12" E, 409.43 FEET;

THENCE S 18°49'35" E, 1868.51 FEET ALONG THE EAST LINE OF SAID SECTION 18, SAME BEING THE WEST LINE OF SAID 22.96 ACRE TRACT TO A POINT FOR THE SOUTHEAST CORNER OF THE HEREIN DESCRIBED TRACT, SAME BEING THE SOUTHWEST CORNER OF SAID 22.96 ACRE TRACT, SAME BEING ON THE NORTH LINE OF THE 349 RANCH ESTATES, A SUBDIVISION OF RECORD IN VOLUME 2, PAGE 46, PLAT RECORDS OF MIDLAND COUNTY, TEXAS, FROM WHICH A 1/2" IRON ROD FOUND AT THE SOUTHEAST CORNER OF SAID SECTION 18 BEARS S 75°43'57" W, 265.00 FEET;

THENCE S 75°43'57" W, 265.00 FEET ALONG THE NORTH LINE OF SAID 349 RANCH ESTATES TO A POINT FOR THE SOUTHEAST CORNER OF THE HEREIN DESCRIBED TRACT, SAME BEING THE SOUTHWEST CORNER OF SAID 22.96 ACRE TRACT, SAME BEING ON THE EAST RIGHT-OF-WAY LINE OF FARMERS DAIRY ROAD;

THENCE N 14°24'01" W, 2733.97 FEET ALONG THE EAST RIGHT-OF-WAY LINE OF FARMERS DAIRY ROAD TO A POINT FOR THE NORTHWEST CORNER OF THE HEREIN DESCRIBED TRACT, SAME BEING THE SOUTHWEST CORNER OF THE 349 RANCH ESTATES, A SUBDIVISION OF RECORD IN VOLUME 2, PAGE 46, PLAT RECORDS OF MIDLAND COUNTY, TEXAS, FROM WHICH A 1/2" IRON ROD FOUND AT THE NORTHWEST CORNER OF SAID SECTION 18 BEARS N 14°24'01" W, 2733.97 FEET;

THENCE N 75°19'12" E, 409.43 FEET ALONG THE NORTH LINE OF SAID SECTION 18, SAME BEING THE SOUTH LINE OF THE 349 RANCH ESTATES TO A POINT FOR THE NORTHEAST CORNER OF THE HEREIN DESCRIBED TRACT, SAME BEING THE SOUTHEAST CORNER OF THE 349 RANCH ESTATES, SAME BEING ON THE WEST LINE OF THE 349 RANCH ESTATES, A SUBDIVISION OF RECORD IN VOLUME 2, PAGE 46, PLAT RECORDS OF MIDLAND COUNTY, TEXAS, FROM WHICH A 1/2" IRON ROD FOUND AT THE NORTHEAST CORNER OF SAID SECTION 18 BEARS N 75°19'12" E, 409.43 FEET;

THENCE S 14°40'48" E, 1040.00 FEET ALONG THE WEST LINE OF SAID 349 RANCH ESTATES TO A POINT FOR THE NORTHEAST CORNER OF THE HEREIN DESCRIBED TRACT, SAME BEING THE SOUTHEAST CORNER OF SAID 349 RANCH ESTATES, SAME BEING ON THE NORTH LINE OF THE 22.96 ACRE TRACT DESCRIBED IN DOCUMENT NUMBER 20195332 OF SAID PUBLIC RECORDS, FROM WHICH A 1/2" IRON ROD FOUND AT THE NORTHEAST CORNER OF SAID SECTION 18 BEARS N 75°19'12" E, 409.43 FEET;

THENCE N 75°19'12" E, 434.18 FEET ALONG THE NORTH LINE OF SAID 22.96 ACRE TRACT TO A POINT OF CURVATURE FOR A CURVE TO THE RIGHT HAVING A RADIUS OF 1040.00 FEET AND A CHORD BEARING AND DISTANCE OF S 6°51'59" E, 431.04 FEET BEING ON THE EAST LINE OF THE HEREIN DESCRIBED TRACT;

THENCE ALONG THE ARC OF SAID CURVE BEING CONVEX TO THIS TRACT, 434.18 FEET TO A POINT OF TANGENCY;

THENCE S 6°51'59" E, 1868.51 FEET TO A POINT OF CURVATURE FOR A CURVE TO THE RIGHT HAVING A RADIUS OF 2560.00 FEET AND A CHORD BEARING AND DISTANCE OF S 16°37'01" E, 197.40 FEET;

THENCE ALONG THE ARC OF SAID CURVE BEING CONVEX TO THIS TRACT, 197.45 FEET TO A POINT OF TANGENCY;

THENCE S 18°49'35" E, 265.00 FEET;

S 75°43'57" W, 95.07 FEET;

S 74°47'34" W, 79.96 FEET;

S 75°43'57" W, 265.00 FEET;

N 59°20'03" W, 28.32 FEET;

N 14°24'01" W, 886.78 FEET;

THENCE ALONG THE ARC OF A CURVE TO THE RIGHT HAVING A RADIUS OF 920.00 FEET AND A CHORD BEARING AND DISTANCE OF S 43°21'40" W, 886.78 FEET;

S 586°21'37" W, 265.00 FEET;

S 02°56'21" W, 118.00 FEET;

S 18°49'35" E, 1868.51 FEET;

S 16°37'01" E, 197.40 FEET;

S 6°51'59" E, 431.04 FEET;

S 14°40'48" E, 1040.00 FEET;

N 75°19'12" E, 409.43 FEET;

N 14°24'01" W, 2733.97 FEET;

S 75°43'57" W, 265.00 FEET;

N 59°20'03" W, 28.32 FEET;

THENCE ALONG THE ARC OF A CURVE TO THE RIGHT HAVING A RADIUS OF 920.00 FEET AND A CHORD BEARING AND DISTANCE OF S 64°17'59" W, 354.22 FEET;

THENCE S 75°43'57" W, 95.07 FEET;

S 74°47'34" W, 79.96 FEET;

S 75°43'57" W, 265.00 FEET;

S 18°49'35" E, 1868.51 FEET;

S 80°51'01" W, 60.26 FEET;

THENCE ALONG THE ARC OF A CURVE TO THE RIGHT HAVING A RADIUS OF 2560

MAVERICK
ENGINEERING · SURVEY · WATER RESOURCES
1909 West Wall Street, Suite K · Midland, TX 79701
Tel: 432.262.0999 · Fax: 432.262.0989 · maverick-eng.com
ENGINEER FIRM #: F-15089 | SURVEY FIRM #:10194514

FIELD NOTE DESCRIPTION OF A 302.39 ACRE TRACT OF LAND, SITUATED IN SECTION 18, BLOCK 38, TOWNSHIP 1 SOUTH, ABSTRACT NUMBER 734, GLO FILE NUMBER 66103, TEXAS and PACIFIC RAILWAY COMPANY SURVEY, MIDLAND COUNTY, TEXAS, AND BEING A PORTION OF THAT SAME TRACT CALLED FOR IN DOCUMENT NUMBER 2019-3532, OF THE OFFICIAL PUBLIC RECORDS (OPR) OF SAID MIDLAND COUNTY, TEXAS, AND BEING MORE PARTICULARLY DESCRIBED AS FOLLOWS:

BEGINNING AT A 5/8" REBAR WITH A PLASTIC CAP STAMPED "MAVERICK FIRM#10194514" (RPC) SET ON THE COMMON LINE OF SAID SECTION 18 AND SECTION 7 OF THE SAME BLOCK AND SURVEY, FOR THE NORTHEAST CORNER OF THIS TRACT, FROM WHICH A 5/8" REBAR FOUND AT THE COMMON CORNER OF SAID SECTIONS 18 AND 7 BEARS N.00°37'18"W., 2,640.01 FEET;

THENCE S.00°37'18"E., ALONG THE COMMON LINE OF SAID SECTIONS 18 AND 7, 1,752.52 FEET TO A POINT FOR THE SOUTHEAST CORNER OF THIS TRACT, FROM WHICH A 5/8" REBAR FOUND AT THE COMMON CORNER OF SAID SECTIONS 18 AND 7 BEARS S.00°37'18"E., 887.49 FEET;

THENCE S.89°22'42"W., 1,040.00 FEET TO A POINT FOR AN INTERIOR CORNER OF THIS TRACT, FROM WHICH A 5/8" REBAR FOUND AT THE SOUTHWEST CORNER OF SAID SECTION 18 AND THE SOUTHEAST CORNER OF SECTION 13 BEARS S.89°22'42"W., 2,640.00 FEET;

THENCE S.00°37'18"E., 1,752.52 FEET TO A POINT FOR THE SOUTHEAST CORNER OF THIS TRACT, FROM WHICH A 5/8" REBAR FOUND AT THE SOUTHEAST CORNER OF SAID SECTION 18 AND THE SOUTHWEST CORNER OF SECTION 17 AND 18, 156.42 FEET AND A CHORD BEARING AND DISTANCE OF S.46°54'52"E., 221.24 FEET;

THENCE ALONG THE ARC OF SAID CURVE BEING CONVEX TO THE NORTHEAST, 247.08 FEET TO A POINT OF TANGENCY;

THENCE S.78°49'35"E., CONTINUING ALONG SAID TODD DRIVE, 1868.51 FEET TO A POINT OF CURVATURE FOR A CURVE TO THE RIGHT HAVING A RADIUS OF 2560.00 FEET AND A CHORD BEARING AND DISTANCE OF S.76°54'52"E., 197.40 FEET;

THENCE ALONG THE ARC OF SAID CURVE BEING CONVEX TO THIS TRACT 197.45 FEET TO A POINT OF DEFLECTION RIGHT FOR THE SOUTHEAST CORNER HEREOF;

THENCE THE FOLLOWING 9 COURSES AND DISTANCES ALL TO AN "RPC" FOUND, TO A POINT OF DEFLECTION LEFT FOR A CURVE TO THE RIGHT HAVING A RADIUS OF 1305.00 FEET AND A CHORD BEARING AND DISTANCE OF S.43°21'40"W., 886.78 FEET;

1. S.24°02'52"W., 60.26 FEET;
2. S.75°20'52"W., 265.00 FEET;
3. S.75°20'52"W., 115.00 FEET;
4. S.14°25'02"E., 7.06 FEET;
5. S.75°20'52"W., 115.00 FEET;
6. S.14°39'08"E., 46.14 FEET;
7. S.29°43'59"W., 80.11 FEET;
8. S.26°30'48"W., 115.00 FEET TO AN "RPC" FOUND AT A POINT OF DEFLECTION LEFT FOR A CURVE TO THE RIGHT HAVING A RADIUS OF 995.00 FEET AND A CHORD BEARING AND DISTANCE OF S.62°08'01"W., 904.79 FEET;
9. ALONG THE ARC OF SAID CURVE BEING CONVEX TO THIS TRACT 904.79 FEET TO A POINT OF DEFLECTION RIGHT;

THENCE S.89°46'46"W., 115.00 FEET TO AN "RPC" FOUND;

THENCE S.72°23'25"W., 72.42 FEET TO A POINT OF CURVATURE FOR A CURVE TO THE RIGHT HAVING A RADIUS OF 995.00 FEET AND A CHORD BEARING AND DISTANCE OF S.78°25'37"W., 137.13;

THENCE ALONG THE ARC OF SAID CURVE BEING CONVEX TO THIS TRACT 137.24 FEET TO A POINT OF DEFLECTION LEFT;

THENCE S.07°37'18"E., 115.00 FEET TO AN "RPC" FOUND AT A POINT OF DEFLECTION RIGHT FOR A CURVE TO THE RIGHT HAVING A RADIUS OF 1110.00 FEET AND A CHORD BEARING AND DISTANCE OF N.88°33'08"W., 349.94 FEET;

THENCE ALONG THE ARC OF SAID CURVE BEING CONVEX TO THIS TRACT 351.41 FEET TO A POINT OF REVERSE CURVATURE FOR A CURVE TO THE LEFT HAVING A RADIUS OF 1950.00 FEET AND A CHORD BEARING AND DISTANCE OF S.73°03'21"W., 1317.88 FEET;

THENCE ALONG THE ARC OF SAID CURVE BEING CONCAVE TO THIS TRACT 154.34 FEET TO A POINT OF DEFLECTION RIGHT;

THENCE THE FOLLOWING 3 COURSES AND DISTANCES TO A POINT OF DEFLECTION RIGHT FOR A CURVE TO THE LEFT HAVING A RADIUS OF 1950.00 FEET AND A CHORD BEARING AND DISTANCE OF S.73°03'21"W., 1317.88 FEET;

2. N.85°29'31"W., 1604.01 FEET;

THENCE ALONG THE ARC OF SAID CURVE BEING CONCAVE TO THIS TRACT 344.34 FEET TO A POINT OF REVERSE CURVATURE FOR A CURVE TO THE RIGHT HAVING A RADIUS OF 920.00 FEET AND A CHORD BEARING AND DISTANCE OF S.84°57'59"W., 354.22 FEET;

THENCE ALONG THE ARC OF SAID CURVE BEING CONVEX TO THIS TRACT 356.44 FEET TO THE POINT OF TANGENCY;

THENCE THE FOLLOWING 5 COURSES AND DISTANCES:

1. S.55°43'57"W., 65.25 FEET;
2. N.59°20'03"W., 28.32 FEET;
3. S.74°47'34"W., 79.96 FEET;
4. S.75°43'57"W., 95.07 FEET TO AN "RPC" FOUND FOR THE SOUTHWEST CORNER HEREOF;
5. N.14°24'01"W., 2733.97 FEET TO THE **POINT OF BEGINNING**, CONTAINING 302.39 ACRES OF LAND.

Gregory W. Shoults
Texas RPLS - No. 5356
Maverick Engineering (FIRM – No. 10194514)

JULY 10, 2024

STATE OF TEXAS
REGISTERED
GREGORY W. SHOULTS
5356
PROFESSIONAL
LAND SURVEYOR

MOCKINGBIRD RIDGE

AMENITY MAP

Mockingbird Ridge Space Percentages		
Usable Acres	501	%
Amenity Space (Acreage) Parks, Native Area, Parkway, Trailhead, Roundabout	**76**	**15%**
Lots & ROW	425	85%

Open, Active Space	Acres	Qty	Radius Miles (Ideal)	Radius Miles (Standard)
	6	**5**		
Park (SE)	4	1(Large)	0.25	0.50
Park (North Central)	1	1(Mod/Small)	0.25	0.50
Park (Far North Central)	0.2	1(Mod/Small)	0.25	0.50
Park (Triangle North of Firewheel)	0.5	Grass	0.25	0.50
Park (Triangle South of Firewheel)	0.5	Grass	0.25	0.50

Source for Radius Numbers: Midland Parks, Recreation, and Open Space Master Plan Page 3.18

Trail (Miles)	**4**
Total (Feet)	**23,240**
Trail North	2,713
Trail South	1,918
Trail Pipeline	1,901
Trail Common Area	637
Trail Park (Southeast - around Playscape)	1,500
Trail Park (Southeast Extention)	1,806
Trail around Basin (North Central)	1,288
Trail around Basin (Northeast)	1,984
Trail along Firewheel (Treelined Streets)	5,396
Trail along Blazing Saddle	1,235
Trail along Waiving North (Pocket Park down to Roundabout)	2,862

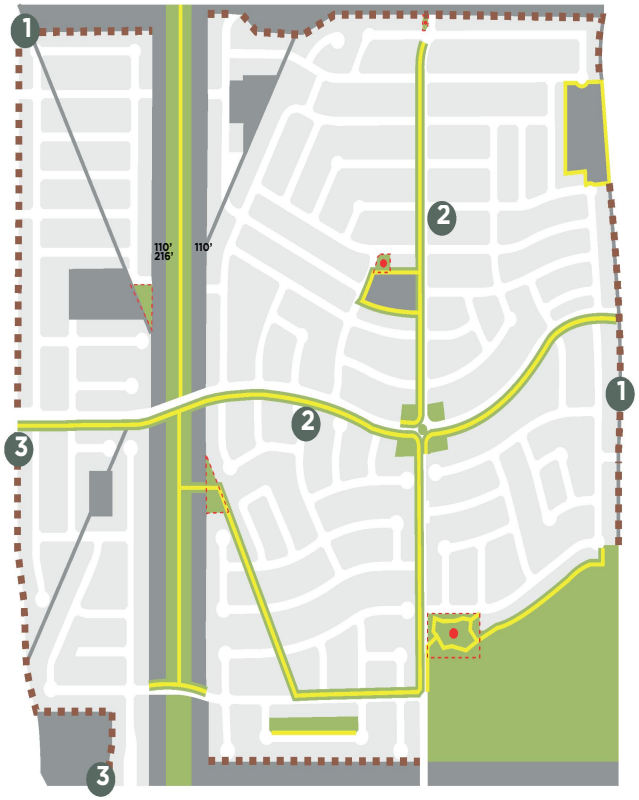

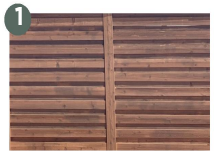





Home Sites

Amenity/Native Space

Unusable Space *(Pipeline, Basin, Oil Wells, Commercial)*

Trail

Community Fence

Playscape


MIDLAND
Be the Energy!
Mattisyn Swierc Henderson
Special Exception
Visit Our Website
MIDLANDTEXAS.GOV

- Maverick Engineering, on behalf of Mattisyn Swierc Henderson
- Special Exception
- Located on Mockingbird Lane

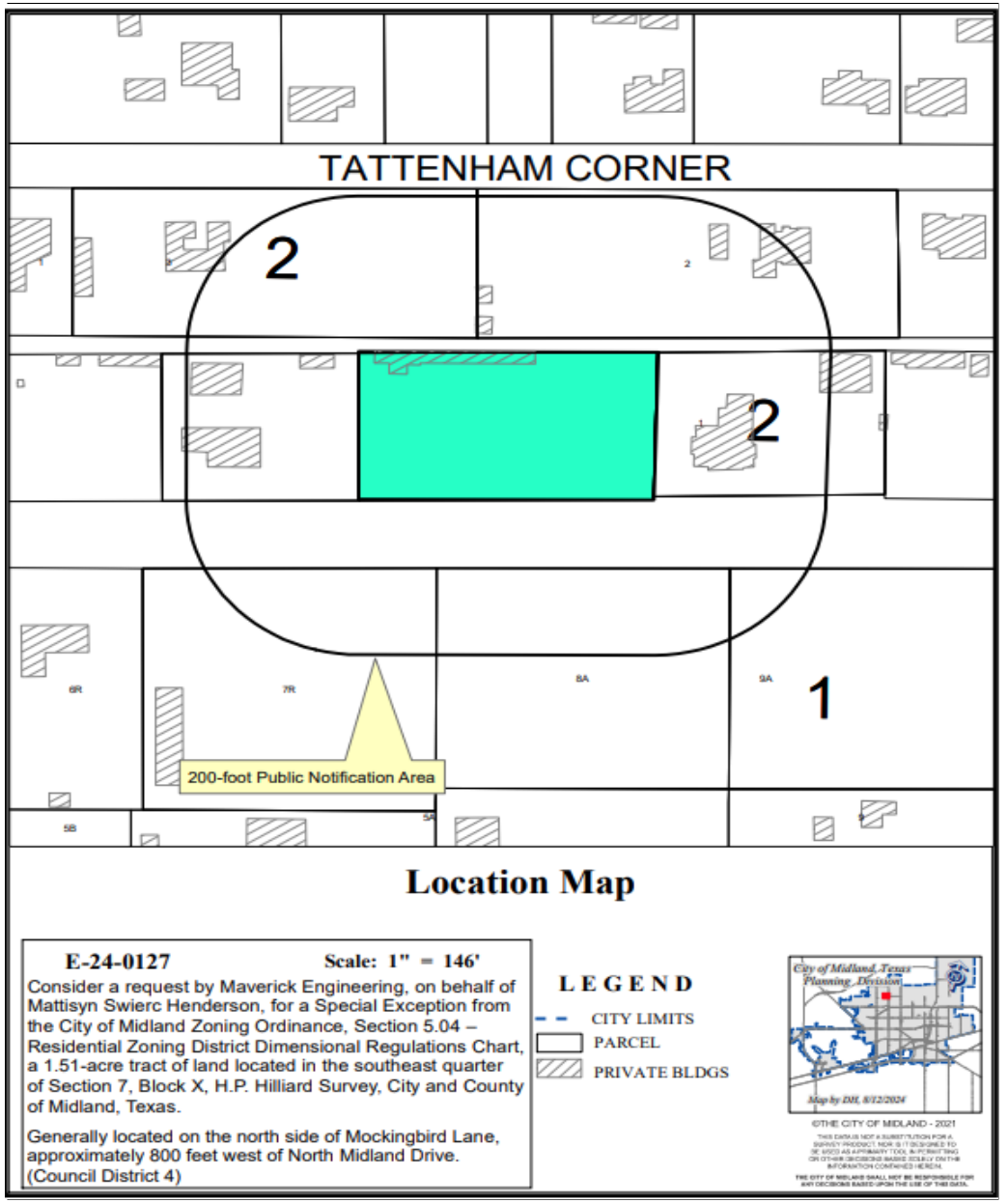

- Current use: Vacant lot
- Proposed Use: Residential dwelling



Currently Zoned:

- AE, Agricultural Estate District

Surrounding Zoning:

- AE, Agricultural Estate District

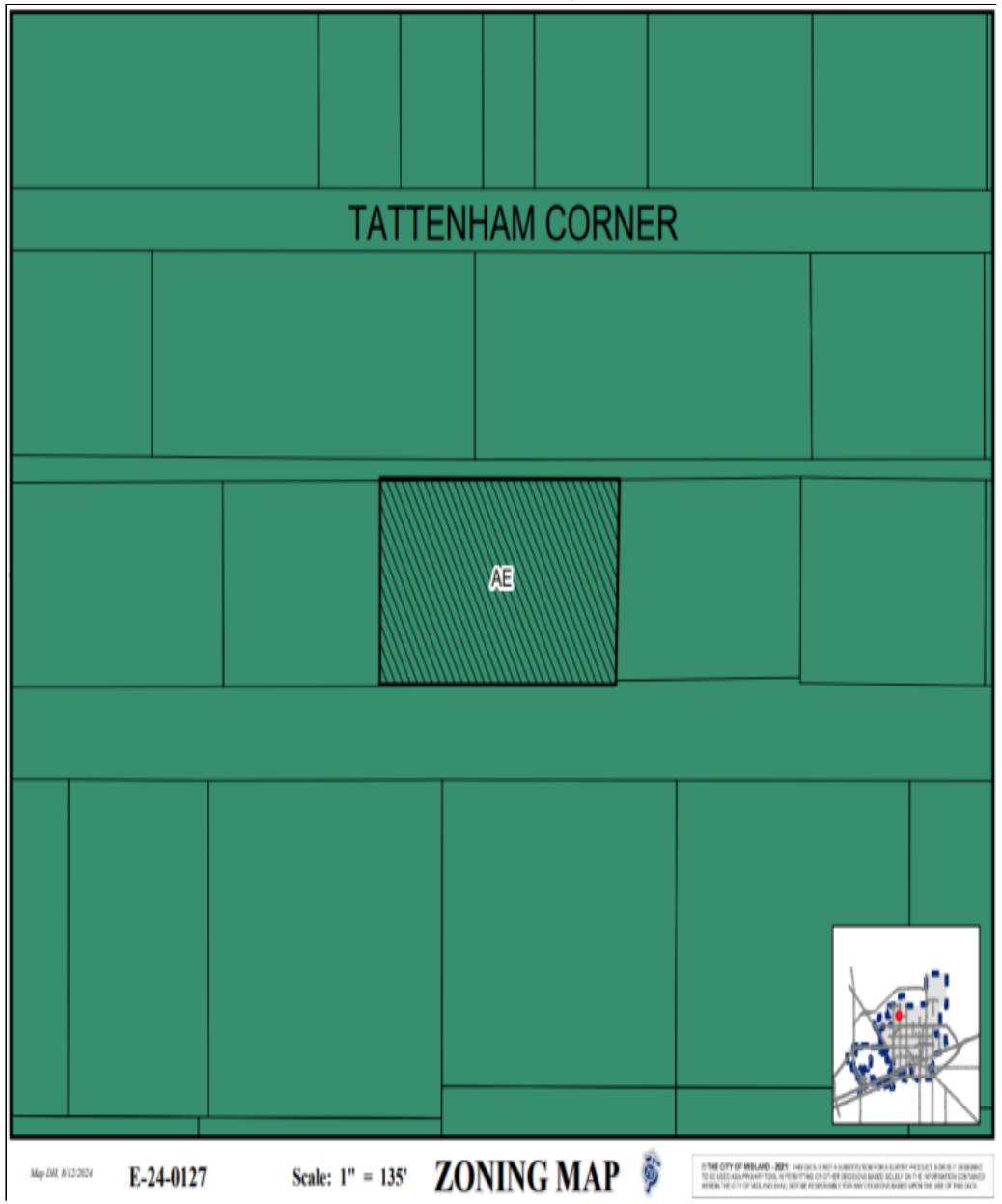

- Proposing a one-and-a-half-acre AE, Agricultural Estate District lot minimum requirement
- Agricultural Estate District lot minimum requirement is 2 acres
- Current parcel owned and available to be platted is 1.5 acres

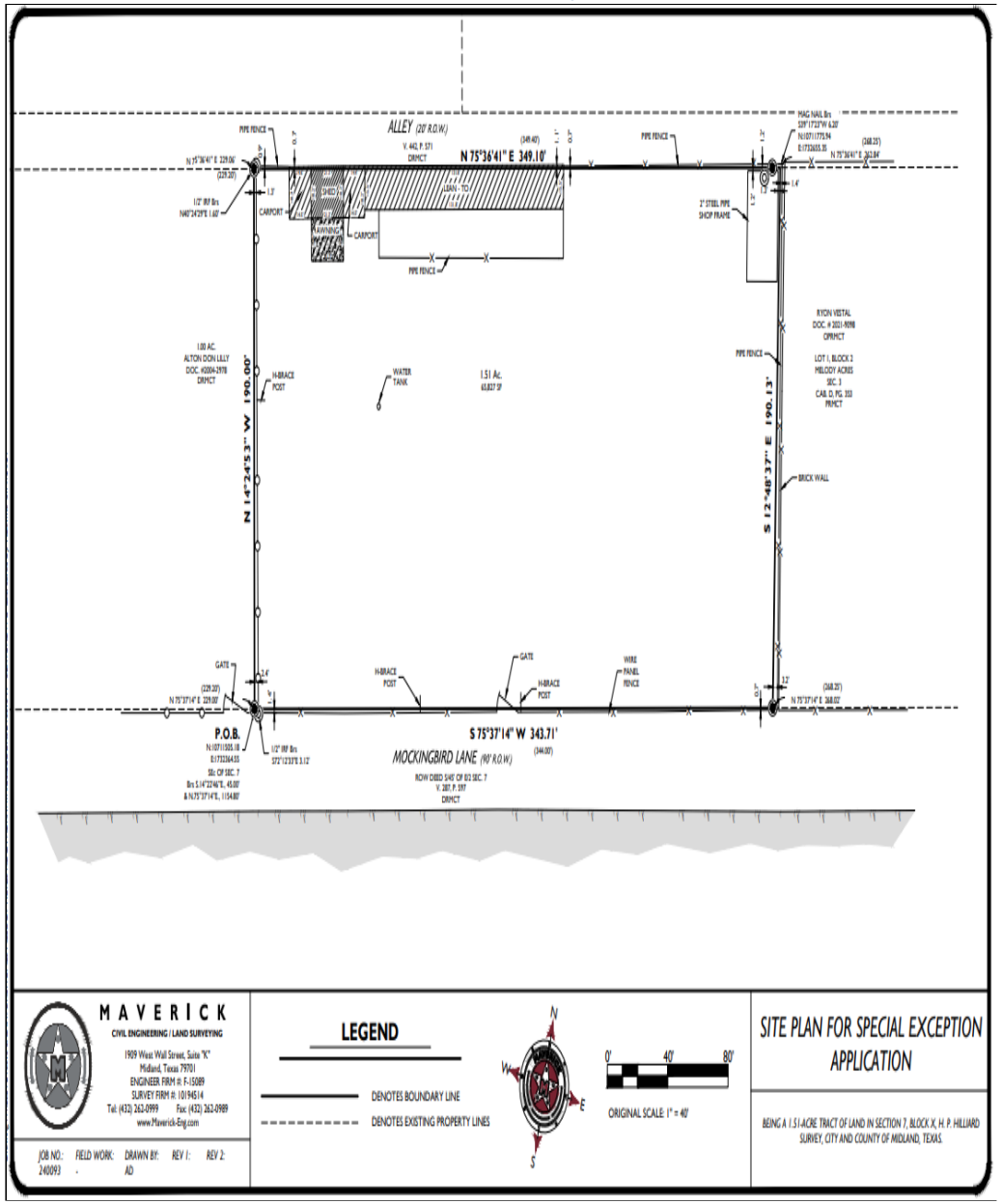

MIDLAND Be the Energy!



- Staff has not received any letters of objection as of September 6, 2024.

- Staff recommends approval of this request. However, should Council approve it, staff recommends that it be subject to conditions A and B.

Conditions:

A. That the minimum lot area shall be one and a half acres.

B. That the locations of all structures on the Property shall significantly conform to the site plan, which is attached hereto as Exhibit “A” and incorporated herein for all purposes.

MISSION

Deliver exceptional services and promote a high quality of life and place for ALL our citizens.



City Council Meeting

Item Number: 24

Meeting Date: September 10, 2024, September 24, 2024

To: City Council / City Manager

From: Christy Weakland, Director

Subject: ORDINANCE ADOPTING A FEE SCHEDULE; CONTAINING A SAVINGS AND SEVERABILITY CLAUSE; PROVIDING AN APPEAL PROCESS; ESTABLISHING AN EFFECTIVE DATE OF OCTOBER 1, 2024; AND ORDERING PUBLICATION (DISTRICT: NONE) (FINANCE) (PROVIDE SOUND GOVERNANCE & FISCAL MANAGEMENT)

Purpose:

Revise an ordinance establishing regulatory and user fees collected by the City of Midland to adequately cover the costs and expenses incurred by the City in connection with providing the services associated with said fees.

Recommended City Council Action:

Approve

Fiscal Impact:

Regulatory and User Fees generate revenue designed to cover the cost of the service being provided by the City of Midland

Strategic Priority:

(Provide Sound Governance & Fiscal Management)

Discussion:

Fee revisions are from six separate departments:

1. Parks & Recreation – Add fee for Temporary fence set up in Parks (Exhibit B) and Sports Complex (Exhibit N), and update to Pool pavilion rental deposit in Recreation (Exhibit C).

2. Fire Department – Health Services (Exhibit D) updates to vaccines, services and rates. Animal Services (Exhibit E) updates to some rates and removal of certain fees.

3. Development – Adding and removing of fees for Planning (Exhibit G). Updating “Lot Clearing” fees in Code (Exhibit H).

4. Airport – $1 increase to Maximum Per 24-hour period rates (Exhibit M).

5. Water – 5% increase to most Water & Sewer (Exhibit J) and Utility Billing (Exhibit K) rates.

6. Police – Updates to Miscellaneous (Exhibit O) Peddler and Carnival Operator licenses.

Morris Williams Jr.

City Manager’s Office

ORDINANCE NO. _____

AN ORDINANCE ADOPTING A FEE SCHEDULE; CONTAINING A SAVINGS AND SEVERABILITY CLAUSE; PROVIDING AN APPEAL PROCESS; ESTABLISHING AN EFFECTIVE DATE OF OCTOBER 1, 2024; AND ORDERING PUBLICATION

WHEREAS, the City Council finds it to be in the public interest to establish fees collected by the City of Midland in order to adequately cover the costs and expenses incurred by the City in connection with providing the services associated with said fees; and

WHEREAS, the City Manager's designees have prepared Exhibits "A" through "P", which are attached hereto and incorporated herein for all purposes, identifying said fees (collectively, the "Fee Schedule"); and

WHEREAS, the City Council of the City of Midland, Texas, finds it to be in the public interest to adopt the Fee Schedule and to establish the fees identified therein as the fees to be collected by the City of Midland, said fees being reasonably related to the costs and expenses incurred by the City in connection with providing the services associated with said fees;

NOW, THEREFORE, BE IT ORDAINED BY THE CITY COUNCIL OF THE CITY OF MIDLAND, TEXAS;

SECTION ONE. That the facts and recitations contained in the preamble of this ordinance are hereby found and declared to be true and correct and are adopted as part of this ordinance for all purposes.

SECTION TWO. That the Fee Schedule is hereby approved and adopted. The fees identified in the Fee Schedule are hereby established as the fees to be collected by the City of Midland except for the following types of fees: a fee charged to a requestor who submits a request for information under the Texas Public Information Act; a fee assessed by the Municipal Court that is not identified in the Fee Schedule; a fee established by a contract, to the extent that the fee established by the contract conflicts with or is not identified in the Fee Schedule; a drainage charge; an impact fee; a fee prescribed by a state law, rule, or

regulation; or a fee for which a state law, rule, or regulation, or the City Charter requires a procedure to be followed to establish the fee other than the procedure that was followed to adopt the Fee Schedule.

To the extent that a fee identified in the Fee Schedule conflicts with a fee that was previously established by ordinance (including an ordinance that has been codified in the City Code), resolution, or other City of Midland instrument, this ordinance shall supersede such previous ordinance, resolution, or other instrument, and the fee identified in the Fee Schedule shall be the applicable fee.

To the extent that a fee identified in the Fee Schedule conflicts with a fee prescribed by a state law, rule, or regulation, the fee prescribed by the state law, rule, or regulation shall be the applicable fee.

To the extent that a fee identified in the Fee Schedule is a fee for which a state law, rule, or regulation, or the City Charter requires a procedure to be followed to establish the fee other than the procedure that was followed to adopt the Fee Schedule, such fee that was previously established by following the applicable procedure shall be the applicable fee.

SECTION THREE. Any person wishing to appeal the payment of a fee identified in the Fee Schedule may do so in accordance with the law, rule, regulation, or ordinance that established the procedure for appealing such fee. To the extent no such appeal procedure has been established for a fee identified in the Fee Schedule that is not a fee assessed by the Municipal Court, the following appeal procedure shall apply:

A. Any person may appeal in writing to the City Manager, or the City Manager's designee, prior to paying the fee or after paying the fee. Any person may appeal in writing to the City Manager, or the City Manager's designee, if the person believes that he or she cannot afford the fee. The person may seek an exemption from all or part of the fee. The City Manager, or the City Manager's designee, shall make certain that the fee is not paid under duress.

If a person wishes to appeal after payment of the fee, the person shall appeal in writing to the City Manager, or the City Manager's designee, within ten (10) calendar days of paying the fee.

B. The City shall not file criminal charges against any person related to non-payment of the fee if the fee is not paid. The City shall not file criminal charges against a person in an attempt to collect the fee.

C. The City Manager, or the City Manager's designee, shall provide a full and meaningful review process. The City Manager, or the City Manager's designee, shall provide a fair opportunity for a person to challenge the accuracy and legal validity of his or her fee obligation. The City Manager, or the City Manager's designee, shall also provide a clear and certain remedy for any erroneous or unlawful fee collection to ensure that the opportunity to contest the fee is a meaningful one. Options that the City Manager, or the City Manager's designee, shall consider in providing a clear and certain remedy are a refund of any excess fee paid, as well as other factors, such as ensuring that a person may continue the operation of his or her business.

D. The City Manager, or the City Manager's designee, shall make his or her decision within ten (10) days of receiving the written notice of appeal. The City Manager, or the City Manager's designee, shall ensure that a person has all rights under any applicable law. A person shall incur no financial hardship by exercising his or her right to appeal.

SECTION FOUR. The provisions of this ordinance are to be cumulative of all other ordinances or parts of ordinances governing or regulating the same subject matter as that covered herein; provided, however, that all prior ordinances or parts of ordinances inconsistent with or in conflict with any of the provisions of this ordinance are hereby expressly repealed to the extent of any such inconsistency or conflict.

SECTION FIVE. If any section, subsection, sentence, clause or phrase of this ordinance is, for any reason, held to be unconstitutional or invalid, such holding shall not affect the validity of the remaining portions of this ordinance. The Council of the City of Midland hereby declares that it would have passed this ordinance and each section, subsection, sentence, clause, or phrase hereof irrespective of the fact that any one or more sections, subsections, sentences, clauses, or phrases be declared unconstitutional or invalid

SECTION SIX. That this ordinance shall become effective on October 1, 2024.

SECTION SEVEN. The City Secretary is hereby authorized and directed to publish the descriptive caption of this ordinance in the manner and for the length of time prescribed by the law as an alternative method of publication.

The above and foregoing ordinance was duly proposed, read in full and adopted on first reading, the _____ day of _____, A.D., 2024; and passed to second reading on motion of Council member _____, seconded by Council member _____, by the following vote:

Council members voting "AYE":

Council members voting "NAY":

The above and foregoing ordinance was read in full and finally adopted by the following vote upon motion of Council member _____, seconded by Council member _____, on the _____ day of _____, A.D., 2024, at a regular meeting of the City Council:

Council members voting "AYE":

Council members voting "NAY":

PASSED AND APPROVED THIS _____ day of _____, A.D., 2024.

_____
Lori Merritt Blong, Mayor

ATTEST:

_____
Marcia Bentley-German, City Secretary

APPROVED AS TO CONTENT
AND COMPLETENESS:

_____
Tommy Gonzalez, City Manager

APPROVED ONLY AS TO FORM:

_____
John Ohnemiller, City Attorney

Exhibit A

City Secretary

	Fee
Business Regulations	
Junk and secondhand goods license-Original	$25.00
Renewal of junk and secondhand good	$10.00
Alcoholic Beverage License Fee	1/2 of State Fee
Taxicab annual operating fee (each)	$200.00
Limo or Motorbus operating fee (each)	$100.00

Exhibit B

Parks

	Fee
SHOWMOBILE	
Deposit	$1,000.00
Rental Fee (minimum of 4 hours)	$62.50/hour
Extensions	$100.00
Show Lights	$200.00
Deposit for Show Lights	$500.00
PORTABLE BLEACHERS	
Deposit	$100.00
Rental Fee (per day)	$100.00
PORTABLE STAGE	
Deposit	$100.00
Rental Fee	$250.00
TRASH CANS	
Deposit	$100.00
Rental Fee (minimum of 10 cans)	$5.00/can/day
PARK PAVILION RENTAL	
Deposit	$100.00
Rental Fee 9am-10pm	$60.00
Rental Fee 9am-3pm	$30.00
Rental Fee 4pm-10pm	$40.00
BEAL RANCH HOUSE	
Deposit no Alcohol	$300.00
Deposit w/Alcohol	$500.00
Rental Fee Per Hour	$50.00
GAZEBO RENTALS - WADLEY AND BEAL	
Deposit	$100.00
Rental Fee 9 am- 3 pm	$50.00
Rental Fee 4 pm-10 pm	$50.00
Rental Fee 9 am-10 pm	$100.00
BASEBALL/SOFTBALL FIELD RENTALS	
Artifical Turf Fields Rental Fee	$65.00/hour
Deposit for Artificial Turf Field Rental	$100.00
Natural Turf Field Rental Fee	$25.00/hour
Lights	$25.00/hour
Tournament Fee	$25.00/team
Tournament Cleaning Fee	$150/field
Tournament Deposit	$100/field
Temporary fence set up on artificial turf field	$200/field
Game Cleaning Fee	$75/Field
FOOTBALL/SOCCER FIELD RENTALS	
Artifical Turf Fields Rental Fee	$65.00/hour
Deposit for Artificial Turf Field Rental	$100.00
Natural Turf Field Rental Fee	$25.00/hour
Lights	$25.00/hour
Tournament Fee	$30/game
Tournament Cleaning Fee	$150/field

Tournament Deposit	$100/field
Game Cleaning Fee	$75/Field
CONCESSION RENTALS	
Concession Stand Deposit	$100.00
Concession Stand Rental	$25.00/hour
ULMER SAND VOLLEYBALL COURT	
Deposit	$25.00
Rental Fee	$25.00/day
WHITEHOUSE RENTAL	
Deposit	$200.00
Rental Fee 10 am - 4 pm	$200.00
Rental Fee 6 pm - 12 am	$200.00
Rental Fee All Day	$400.00

Exhibit C

Recreation

		Fee
CITY POOL RATES		
Entry Fee		$5.00
Children under 2		Free
10 Punch Card		$20.00
25 Punch Card		$40.00
75 Punch Card		$80.00
Personal Cooler Admission		$10.00
Soda		$3.00
Water		$2.00
Snacks		$2.00
Swim lesson (1 week)		$20.00
Life Jacket Rental		Free
PRIVATE RENTALS		
DEPOSIT		$150.00
RENTAL FEE (2 hours)		$850.00
POOL PAVILION RENTALS		
(Doug Russell Only)		
DEPOSIT		$150.00
RENTAL FEE		$100/session
MARTIN LUTHER KING RECREATION CENTER	per hour	
Activity Room		
During Operation		$25.00
After Hours		$35.00
Deposit		$100.00
Activity Rm/with Gameroom	per hour	
During Operation		$50.00
After Hours		$70.00
Deposit		$300.00
Auditorium	per hour	
During Operation		$50.00
After Hours		$75.00
Deposit No Alcohol		$500.00
Deposit Alcohol		$750.00
Gymnasium	per hour	
During Operation		$40.00
After Hours		$60.00
Deposit		$200.00
MLK Volleyball Net Setup Fee		$15.00

Exhibit C

Recreation

	Fee
Training Room	per hour
Sporting Events ONLY	
During Operation	$50.00
After Hours	$75.00
Deposit	$1,000.00
Daily Entrance Fee	$1.00
Monthly Membership	$15.00
MOVIE SCREEN	
Deposit	$1,000.00
Fee (Maximum 4 hours)	$500.00

Exhibit D

Health and Senior Services

	Fee
Environmental Section	
Mobile Food Vendor	
Mobile Food Vendor	$175.00
Mobile Food (Seasonal)	$105.00
Temporary Permit	$70.00
Late Fee (When not paid by specified date)	25% of Permit Fee
Food Services Establishments	
1 thru 5 employees	$150.00
6 thru 10 employees	$200.00
11 or more employees	$250.00
Deli/Meat Market/Bakery	$75.00
Farmers Market	$50.00
Late Fee (When not paid by specified date)	25% of Permit Fee
Retail Food Store	
1 thru 5 employees	$150.00
6 thru 10 employees	$200.00
11 or more employees	$250.00
Temporary Permit	$70.00
Late Fee (When not paid by specified date)	25% of Permit Fee
Child Care Programs	
Day Care	$100.00
Foster Care	$50.00
Child Care Program for after School	$50.00
Late Fee (When not paid by specified date)	25% of Permit Fee
Swimming Pool, Spa, or Water Feature Permit	
Swimming Pool or Spa Permit	$100.00
Water Feature Permit	$100.00
Non-Profit Yearly	$30.00
Non-Profit Temporary	$30.00
Re-inspection (When Establishment is shut down)	$75.00
Late Fee (When not paid by specified date)	25% of Permit Fee
Septic System Inspections	
Septic System Residential	$150.00
Septic System Commercial	$210.00
Septic re-inspection (When fails initial inspection)	$50.00
Late Fee (When not paid by specified date)	25% of Permit Fee
Late Fee (When not paid by specified date)	25% of Permit Fee

Exhibit D

Health and Senior Services

Clinical Section

Health Department Services	Fee
Infanrix/Daptacel (DTaP)	$45.00
Kinrix (DTaP & Polio)	$60.00
Pentacel (DTaP & Polio & Flu Type B)	$115.00
IPOL IPV (Polio)	$45.00
Haverix Pedi HEP A	$40.00
Engerix Pedi HEP B	$35.00
Acthib/Hiberix - HIB (Flu Type B)	$20.00
Vaxelis (DTaP, HIB, Polio & HEB B)	$150.00
Rototeq/Rotarix (Rotavirus)	$140.00
Proquad (MMR & Varicella)	$270.00
Prevnar20/Vaxneuvance 15 (Pneumococcal Conjugate)	$260.00
Pneumovax 23 (PPSV23-Pneumococcal Conjugate)	$125.00
MMR II	$95.00
Varivax (Varicella)	$175.00
Tenivac (TD-Tetanus & Diptheria)	$45.00
Boostrix/Adacel - TDAP (Tetanus Diptheria and Pertussis)	$50.00
Gardasil (HPV 9)	$280.00
Menqaudfi/Menveo (Meningitis)	$200.00
Trumenba (Meningococcal Group B)	$190.00
Bexsero (Meningococcal Group B)	$200.00
Havrix (Adult Hep A)	$80.00
Energix (3-dose Adult Hep B)	$65.00
Heplisav (2-dose Adult Hep B)	$125.00
Abrysvo/Arexvy (Adult RSV)	$295.00
Beyfortus (Infant RSV)	$500.00
RabAvert (Rabies)	$580.00
Imovax (Rabies)	$400.00
Pfizer- Infant (COVID-19)	$65.00
Pfizer- Adolescent (COVID-19)	$90.00
Pfizer- Adult (COVID-19)	$130.00
Moderna- Adult (COVID-19)	$145.00
Shingrix (Shingles)	$200.00
Infant flu	$25.00
Flu	$30.00
High Dose Flu	$65.00
Flublok	$65.00
Yellow Fever	$130.00
TB Test	$15.00
TB Clinic	$15.00
Pregnancy Test-Urine	$15.00

Exhibit D

Health and Senior Services

	Fee
Pregnancy Test - Blood	$15.00
STD Testing	$15.00
HIV Testing	$15.00
STD Clinic Treatment	$15.00
STD Clinic Retreatment	$15.00
Prep Panel	$70.00
Prep Office Visit	$15.00
Rapid GC/CT	$50.00
Rapid Trichomoniasis	$10.00
Rapid Syphilis	$20.00
Rapid HIV	$25.00
Renal Panel	$4.00
Lipid Panel	$4.00
Comprehensive Metobolic Panel (CMP)	$4.00
Complete Blood Count (CBC)	$3.00
Hemoglobin A1c	$6.00
PSA Total Screen	$8.00
Hepatitis B Surface Ab	$8.00
Hepatitis B Surface Ag	$8.00
Hepatitis C Ag	$9.00
Hepatisis C Ab	$9.00
MMR/Varicella Panel	$36.00
Administration Fees	
Insured	$60.00
TVFC 1=$10, 2=$20, >or= 3 = $30	
Fees In Red- Indicates the fee is not listed or different than stated in code.	
Refugee	$0.00
Medicaid/CHIP	$13.75
Medicare Flu or Pneumonia	$60.00

Exhibit E

Animal Services

	Fee
Adoption Fees	
Adoption Fees (includes micro chipping)	$50 for Cats; $75 for Dogs
Ducks, Rabbits, Other	$5.00
Vaccines and Medical Fees	
Rabies ($10 special event and $20 reg)	$10.00 or $20.00
Impoundment Fees	
Impoundment - 1st Offense (altered)	$25.00
Impoundment - 1st Offense (unaltered)	$100.00
Impoundment - 2nd Offense (altered)	$50.00
Impoundment - 2nd Offense (unaltered)	$150.00
Impoundment - 3rd+ Offense (altered)	$75.00
Impoundment - 3rd+ Offense (unaltered)	$100.00
Livestock Impoundment	$150.00
Boarding & Quarantine	
Boarding (per day)	$10.00
Quarantine Fees (minimum of 10 days)	$10.00/day
Pick-up Fees	
Pickup Fee - Owner release	$15.00
Pickup Fee -Owner release (additional animals)	$5.00/each
Pickup Fee - Deceased	$10.00
Pickup Fee - Dead Small Livestock	$50.00
Pickup Fee- Deceased Livestock	$150.00
Miscellaneous Fees	
Drop off Fee - Owner release	$10.00
Rabies Specimen Shipping	$100.00
Dangerous Dog Yearly Registration	$50.00
Off Leash Training Permit	$5.00
Microchipping	
Microchips	$10.00
Pet Licenses	
Pet License (yearly)	$10.00
Pet License (replacement)	$1.00

Exhibit F

Golf Course

	Fee
Green Fee - Weekday	$30.00
Green Fee - Weekend	$35.00
Green Fee - after 4:00	$20.00
Green Fee - Weekend AM - 9 Holes	$18.00
Green Fee - Weekday Senior	$20.00
Green Fee - Weekday Senior - 9 Holes	$13.00
Green Fee - Junior/High School/College	$9.50
Green Fee - Senior Annual Pass (Monday- Thursday)	$500.00
Green Fee - Senior w/Annual Pass per round	$5.00
Cart Fee - 18 holes per rider	$15.00
Cart Fee - 9 holes per rider	$7.50
Tournament Fee - Weekday per player	$55.00
Tournament Fee - Weekend per player	$65.00
Tournament Cooker Fee, per player (revenue to concessionaire)	$5.00
Range Balls - Small Bucket (w/tax)	$8.00
Range Balls - Medium Bucket (w/tax)	$10.00
Range Balls - Large Bucket (w/tax)	$15.00
Range Balls - Tournament Bucket (w/tax)	$5.00
Club Rental	$40.00
Pull Cart Rental	$5.00

Exhibit G

Planning

	Fee
Preliminary Plat Application	
Sketch Plan Application (1st review)	$225.00
Sketch Plan Application (2nd review)	$100.00
Preliminary Plat Application (up to 50 acres)	$350.00
Preliminary Plat Application (over 50 acres)	$500.00
Final Plat Application	
Standard Plat or Residential Up to 50 acres	$350.00
Standard Plat or Residential over 50 acres Max	$500.00
Administrative Plat	$250.00
Digital File Conversion Fee	$50.00
Recording Fees- Plats up to 18"x24"	$61.00
Recording Fees- Plats over 18"x24"	$81.00
Related Documents	$26.00
Replat	
Replat with Public Hearing	$250.00
Replat without Public Hearing	$250.00
Annexation/Zone Change Application	
Standard Zone Change	$500.00
Planned District Zone Change	$650.00
Multiple PD Proposal Basic	$550.00
Multiple PD Proposal Per Additional District	$100.00
Additional PD Regulations	$75.00
Site Plan in PDF Format for City Council	$50.00
Application Fee	$500.00
Zoning Board of Appeal Fee	$600.00
Special Exception Application Fee	$500.00
Zone Change in Council District 2 from MF-22, Multiple-Family Dwelling District or C, Commercial District to SF-1, Single-Family Dwelling District, SF-2, Single-Family Dwelling District, or SF-3, Single-Family Dwelling District	$0.00
Zoning Verification Letter	$25.00
Oil and Gas	
Application for Oil and Gas Permit	$4,000.00
Application for Oil and Gas Variance	$250.00
Credit Access Businesses	
Application Fee	$50.00
Specific Use Permit (SUP) / Specific Use Designation (SUD)	
Application for SUP/SUD with Term for Alcoholic Beverage	$300.00
Application for General SUP/SUD	$400.00
Renewal SUP/SUD	$75.00
Temporary Mobile Home	

Exhibit G

Planning

	Fee
Special Temporary Permit for Manufactured Home App (Based on Genuine Hardship Condition)	$50.00
Special Temporary Permit for Manufactured Home App (For Occupancy by a Caretaker, Manager, or Guard)	$100.00
Dedications	
Review Fee	$400.00
Vacation	
Application Fee	$400.00
Creation of a Building Site	
Application Fee	$400.00
Master Sign Plan	
Application Fee	$300.00
Traffic Impact	
Traffic Impact (Staff Study)	$350.00
Traffic Impact (Review of Submittal)	$600.00
Portable Storage Containers	
Freight or Portable storage cont.- permit fee	$125.00
Each add'l on same property	$25.00
90- day permit fee for storage container	$150.00
Each add'l container	$25.00
45- day permit fee for storage container	$125.00
Each add'l container	$25.00
30 day permit fee for storage container	$75.00
Certificate of occupancy and compliance	
Certificate of occupancy and compliance	$10.00

Exhibit H

Code Enforcement

	Fee
Building Permits	
Construction Permit Fee	31.5 cents per square foot
Sidewalk/ROW Residential (No building permit)	$50.00
Sidewalk/ROW Commercial (No building permit)	$200.00
Street Improvement Fee	23 cents per square foot
Fence Fee	$50.00
Manufactured Home	$200.00
Manufactured Home Skirting Deposit	$100.00
Moving Fee	$200.00
Non-Profit Residential	$150.00
Temporary Structure	$100.00
Detached Assessory (120Sq.ft or less)	$50.00
Detached Assessory (120Sq.ft to 200 sq.ft.)	$100.00
Demolition Permits	
Commercial Demo Fee - Building	$500.00
Commerical Demo Fee - Interior	$100.00
Residential or Accessory Bldg	$50.00
Temporary Sign Permits	
Permanent Sign Permits	$50.00
Temporary sign annual permit fee	$50.00
Failure to remove sign- hauling fee	$50.00
Failure to remove sign- daily storage fee	$10.00
Oil & Gas Drilling Permits	
Amendment Fee	$1,000.00
Certification Fee & Inspection	$300.00
Oil & Gas Application Fee	$4,000.00
Well Tranfer Fee	$500.00
***TX State HB-40 recognizes Ordinance 8769 including fees and may not be amended**	
Mobile Home Park Licenses	
Mobile Home Park Licenses	$25.00 plus $1 ea/addl
Certificate of Occupancy	
Certificate of Occupancy	$50.00
Lot Deposits	
Clearing Deposits (Floor & Foundation) Commercial	$2,000.00
Clearing Deposits (Floor & Foundation) Residential	$600.00
Clearing Deposits (Rubbish, Litter, Lot)	$200.00
Clearing Deposit (Accessory Bldg, Debris, Material)	$200.00

Lot Clearing

Exhibit H

Code Enforcement

	Fee
Administrative Fee (per cas)	$100.00
Mow Lot 12,000 square feet or less (per lot)	$175.00
Mow Lot larger than 12,000 square feet (per lot)	$275.00
Mow Weeds in Alley or Right-of-Way (per lot frontage)	$50.00
Trash Removal (per ton)	$110.00
Auto or Pick-Up Tire Removal (per tire)	$5.00
Semi-Truck or Similar Large Tire Removal (per tire)	$12.00
Tree Removal and Trimming (per hour)	$75.00
Graffiti Removal (per lot)	$100.00
Electrical Fees	
Minimum Fee	$50.00
Temporary Service	$50.00
Temporary Construction Pole	$50.00
Parking Lot Wiring	$50.00
Building Wiring	$0.05 per sq.ft
Service Change	$50.00
Sign Electrical Fee	$50.00
Electrical Fixture Fee (for first, $1.00 each after)	$15.00
Mobile Home Rewiring ($5 for each add'l)	$50.00
Clearance for Elec Connect/Disconnect Residential	$50.00
Reinspection (Red Tag)	$50.00
Mechanical Fees (when not part of bldg.permit)	
Minimum Fee	$50.00
Inspection for Heating, AC,Venting,Ductwork,Fridge ($5 for each add'l inspection)	$50.00
Fire Extinguishing Permit	$50.00
Boiler Inspections (33K to 1165 BTU)	$50.00
Boiler Inspections (1165K to 3300 BTU)	$50.00
Boiler Inspections (over 3300 BTU)	$50.00
Reinspection (Red Tag)	$50.00
Gas Fees (when not part of bldg.permit)	
Minimum Fee	$50.00
Floor Furnace, Boiler	$50.00
Vented Recessed Heater	$50.00
Gas line service	$50.00
Vented Appliance ($10 each add'l)	$50.00
Temporary Connection	$50.00
Reinspection (Red Tag)	$50.00
Plumbing Fees (when not part of bldg.permit)	
Minimum Fee	$50.00

Exhibit H

Code Enforcement

	Fee
Furnace, unit or wall heater ($10 each add'l)	$50.00
Water heater ($10 each add'l)	$50.00
Water softener	$50.00
Lawn Sprinkler	$50.00
Water Line Service	$50.00
Sewer Line Service	$50.00
Replumb Bldg	$0.05 Sq. Ft.
Fire Sprinker	$0.05 Sq. Ft.
Backflow Assembly Device ($10 each add'l)	$50.00
Reinspection (Red Tag)	$30.00
Vendor Permit	
Vendor Permit	$100.00
Water Well Fee	
Drill new well	$50.00
Reinspection Fee	
Reinspection (All Permits)	$100.00
Application to Board of Appeals	
Application	$200.00
Public Ways and Property	
House moving permit fee	$25.00
Network Nodes-5 in same application	$500.00
Each additional node in application	$250.00
Node Support Pole Application	$1,000.00
Fee to attach network node to public ROW pole	$20.00

Exhibit I

Engineering

	Fee
Traffic	
Street Name and Traffic Control Sign Fee	$500/intersection
Right of Way Use Permit Fee	$350.00

Exhibit J

Water & Sewer Fees

	Fee
Water Rates Inside City:	
Base Rate for All Except Apartments for First 2,000 gallons	$22.69
Base Rate for Apartments per Unit for first 2,000 gallons per Unit	$18.48
Rate per 1,000 gallons over base of 2,000 up to 10,000	$6.42
Rate per 1,000 gallons from 10,001 up to 25,000	$8.43
Rate per 1,000 gallons from 25,001 up to 50,000	$11.34
Irrigation)	$14.18
Sewer Rates Inside City:	
All Customers Base Rate (First 2,000 gallons)	$22.88
All Customers Rate per 1,000 after Base Rate	$0.92
Water Rates Outside City:	
Base Rate for All Except Apartments for First 2,000 gallons	$34.04
Base Rate for Apartments per Unit for first 2,000 gallons per Unit	$27.72
Rate per 1,000 gallons over base of 2,000 up to 10,000	$9.63
Rate per 1,000 gallons from 10,001 up to 25,000	$12.65
Rate per 1,000 gallons from 25,001 up to 50,000	$17.01
Irrigation)	$21.26
Sewer Rates Outside City:	
Residential Base Rate (First 2,000 gallons)	$34.32
Residential Rate per 1,000 after Base Rate	$1.39
Miscellaneous:	
Septage waste hauler discharges and fees (per gallon)	$0.32

Exhibit K

Customer Service/Utility Billing

	Fee
Account Billing	
Residential Utility Deposit	$78.75
Re-read of Water Meter (2nd time)	$26.25
Test of Water Meter (2nd time)	$26.25
Non-sufficient fund check	$31.50
Reconnect-Disconnect fee	$31.50
Application Fee	$21.00
Transfer Fee	$20.00
Tampering/Straight Fee (1st time)	$210.00
Tampering/Straight Fee (2nd time)	$315.00
Water Meters & Tap Fees	
3/4" water meter-with existing meter box	$42.00
1" water meter-with existing meter box	$105.00
1" water meter tap (no paving cut or meter installation)	$409.50
1" service charge for tap and meter with meter box	$446.25
2" water meter- with existing meter box	$252.00
2" water meter tap (no paving cut or meter installation)	$564.00
2" service charge for tap and meter with meter box	$745.50
3" water meter	$393.75
4" water meter	$375.00
4" sewer tap	$367.50
6" sewer tap	$400.00
Replacement sewer tap (per line)	$300.00
Fee to abandon line for replacement	$150.00
Paving cut/Boring & Casing Fee	$400.00
Fire hydrant meter setting or moving	$200.00
Fire Hydrant meter deposit setting	$2,400.00
Drinking Water Testing- Total Coliform (Presence or absence)	$18.00
Non-Potable H2O testing- Total Coliform & E.Coli (MPN)	$25.00
Non-Potable H2O testing- Total Coliform & Fecal Coliform (MPN)	$25.00
Move a service line no more than 5 feet	$150.00

Exhibit L

Sanitation Fees

Inside City Limits

# of Containers	Number of pickups per week			
	2X	3X	4X	5X
Residential				
0.25	$23.00			
0.5	$46.00			
0.75	$69.00			
1	$92.00			
Commercial				
0.25	$32.50	$48.75	$65.00	$81.25
0.5	$65.00	$97.50	$130.00	$162.50
0.75	$97.50	$146.25	$195.00	$243.75
1	$130.00	$195.00	$260.00	$325.00
2	$247.00	$370.50	$494.00	$617.50
3	$364.00	$546.00	$728.00	$910.00
4	$481.00	$721.00	$962.00	$1,202.50
5	$598.00	$897.00	$1,196.00	$1,495.00
6	$715.00	$1,072.50	$1,430.00	$1,787.50
7	$832.00	$1,248.00	$1,664.00	$2,080.00
8	$949.00	$1,423.50	$1,898.00	$2,372.50
9	$1,066.00	$1,599.00	$2,132.00	$2,665.00
10	$1,183.00	$1,774.50	$2,366.00	$2,957.50
11	$1,300.00	$1,950.00	$2,600.00	$3,250.00
12	$1,417.00	$2,125.50	$2,834.00	$3,542.50
13	$1,534.00	$2,301.00	$3,068.00	$3,835.00
14	$1,651.00	$2,476.50	$3,302.00	$4,127.50
15	$1,768.00	$2,652.00	$3,536.00	$4,420.00
16	$1,885.00	$2,827.50	$3,770.00	$4,712.50
17	$2,002.00	$3,003.00	$4,004.00	$5,005.00
18	$2,119.00	$3,718.50	$4,238.00	$5,297.50
19	$2,236.00	$3,354.00	$4,472.00	$5,590.00
20	$2,353.00	$3,529.50	$4,706.00	$5,882.50
21	$2,470.00	$3,705.00	$4,940.00	$6,175.00
22	$2,587.00	$3,880.50	$5,174.00	$6,467.50
23	$2,704.00	$4,056.00	$5,408.00	$6,760.00
24	$2,821.00	$4,231.50	$5,642.00	$7,052.50
25	$2,938.00	$4,407.00	$5,876.00	$7,345.00
26	$3,172.00	$4,758.00	$6,344.00	$7,930.00
27	$3,289.00	$4,933.50	$6,578.00	$8,222.50
28	$3,406.00	$5,109.00	$6,812.00	$8,515.00
29	$3,523.00	$5,284.50	$7,046.00	$8,807.50
30	$3,640.00	$5,460.00	$7,280.00	$9,100.00

Exhibit L

Sanitation Fees

Per Month	
Recycling fee	$0.50
Litter Abatement Fee	$1.00

Outside City Limits - Sanitation Fees

# of Containers	Number of pickups per week			
	2X	3X	4X	5X
Residential				
0.25	$34.50			
0.5	$69.00			
0.75	$103.50			
1	$138.00			
Commercial				
0.25	$48.75	$73.13	$97.50	$121.88
0.5	$97.50	$146.25	$195.00	$243.75
0.75	$146.25	$219.38	$292.50	$365.63
1	$195.00	$292.50	$390.00	$487.50
2	$370.50	$555.75	$741.00	$926.25
3	$546.00	$819.00	$1,092.00	$1,365.00
4	$721.50	$1,082.25	$1,443.00	$1,803.75
5	$897.00	$1,345.50	$1,794.00	$2,242.50
6	$1,072.50	$1,608.75	$2,145.00	$2,681.25
7	$1,248.00	$1,872.00	$2,496.00	$3,120.00
8	$1,423.50	$2,135.25	$2,847.00	$3,558.75
9	$1,599.00	$2,398.50	$3,198.00	$3,997.50
10	$1,774.50	$2,661.75	$3,549.00	$4,436.25
11	$1,950.00	$2,925.00	$3,900.00	$4,875.00
12	$2,125.50	$3,188.25	$4,251.00	$5,313.75
13	$2,301.00	$3,451.50	$4,602.00	$5,752.50
14	$2,476.50	$3,714.75	$4,953.00	$6,191.25
15	$2,652.00	$3,978.00	$5,304.00	$6,630.00
16	$2,827.50	$4,241.25	$5,655.00	$7,068.75
17	$3,003.00	$4,504.50	$6,006.00	$7,507.50
18	$3,178.50	$4,767.75	$6,357.00	$7,946.25
19	$3,354.00	$5,031.00	$6,708.00	$8,385.00
20	$3,529.50	$5,294.25	$7,059.00	$8,823.75
21	$3,705.00	$5,557.50	$7,410.00	$9,262.50
22	$3,880.50	$5,820.75	$7,761.00	$9,701.25
23	$4,056.00	$6,084.00	$8,112.00	$10,140.00
24	$4,231.50	$6,347.25	$8,463.00	$10,578.75
25	$4,407.00	$6,610.50	$8,814.00	$11,017.50

Exhibit L

Sanitation Fees

Open Top/Compactor Fees	
One-time set up fee (Delivery fee)	$51.00 + Tax
Daily Rental	$11.00 + Tax
Haul Charge	$255.00 + Tax
Per Ton Disposal Fee (Landfill Charge	$47.38 per ton

Removal of Garbage by Other Entity	
Garbage Hauler's Permit	$500.00

Landfill- Dumping and Unloading Charges	
Landfill Access Fee-	$25.00
Unlimited Landfill Access Fee-year	$500.00
Minimum Fee under 1 Ton	$23.69
Per ton Disposal Fee	$47.38
Materials not contained	$75.00
Pull off Fee	$77.00
Special Waste/Minor or TDH permit	
Special Waste Fee- Per Ton	$94.76
Minimum Fee under 1 Ton	$47.38

Exhibit M

Airport

	Fee
Landing Fees (per 1000 pounds of gross landing weight)	$2.10
Air carrier fees (per 1000 pounds of gross landing weight)	Based on Rates & Charg
Public Aircraft parking – locally based aircraft (month)	$25.00
Public Aircraft parking – transient aircraft (day)	$1.50
Customer Facility Charge - vehicle rentals (per transaction day)	$3.00
Public Parking – CI (Covered)	
0-30 minutes	Free
31-60 minutes	$3.00
Every additional hour	$2.00
Maximum per 24-hour period	$17.00
Public Parking – P1 & P3 (Close-In)	
0-30 minutes	Free
31-60 minutes	$2.00
Every additional hour	$1.00
Maximum per 24-hour period	$14.00
Public Parking – P2 &P4 (Economy)	
0-30 minutes	Free
31-60 minutes	$2.00
Every additional hour	$1.00
Maximum per 24-hour period	$11.00
Public Parking – C2 (Remote Covered)	
0-30 minutes	Free
31-60 minutes	$2.00
Every additional hour	$1.00
Maximum per 24-hour period	$13.00
Public Parking – P5 (Remote Economy)	
0-30 minutes	Free
31-60 minutes	$2.00
Every additional hour	$1.00
Maximum per 24-hour period	$9.00
Ground Transportation Permits -per month, per vehicle	
Taxicab	$25.00
Buses	$25.00
Courtesy vehicles for off-aiport hotel	$25.00
Courtesy vehicles for off-aiport car rental (plus 10% airport revenue)	$25.00
Courtesy vehicles for off-aiport parking lot (plus 10% airport revenue)	$25.00

Exhibit M

Airport

	Fee
Employee Parking	
Annual Employee Parking media (prorated monthly)	$40.00

Special assessments

1. Should any person upon driving a vehicle from the paid parking areas of the airport not be able to present an officially issued ticket indicating where that person's vehicle was parked and at what time, then the charge assessed for the parking of that vehicle shall be at least $12.00. In addition to that fee, there shall also be a fee assessed for the parking of that vehicle equal to the amount of the daily rate, times number of days, for the area in which that vehicle was parked as is indicated by the daily lot inventory taken by the airport administration.

2. Whenever a person or an entity shall pay for the parking fees assessed by this Section with a check or draft, and that check or draft is dishonored, then there shall be an additional $25.00 assessed against that person or entity.

Exhibit N

Sports Complex

	Fee
Football/Soccer Stadium	
Sporting Events	
Half Stadium Rental	$1,500.00/day
Whole Stadium Rental	$3,000.00/day
All Inclusive Football Game Package *This package includes a whole stadium rental, cleaning, lighting, game officials and staff, operators, security, EMS, and UIL fees, if necessary.*	$10,000.00/game
Non-Sporting Events	
Non-Profit Deposit	$1,500.00
Non-Profit Rental	$1,500.00/day
Commercial Deposit	$2,500.00
Commercial Rental	$2,500.00/day
Cleaning Fees	
Less than 2,000 people	$1,500/side
More than 2,000 people	$2,500/side
Lighting Fee	$75.00/hour
Baseball Stadium	
Baseball Events	$750.00/day
Non-Baseball Events	
Non-Profit Deposit	$1,000.00
Non-Profit Rental	$1,000.00/day
Commercial Deposit	$1,500.00
Commercial Rental	$1,500/day
Cleaning Fees assessed by Midland Rockhounds	
Lighting Fee	$75.00/hour
Groundskeeper and Grounds Material Fees assessed by Midland Rockhounds	
Diamond Club Deposit	$100.00
Diamond Club Rental (minimum 2 hours)	$50.00/hour
Diamond Club Cleaning Fee (payable to Midland Rockhounds)	$150.00
OPERATOR FEES FOR BASEBALL AND FOOTBALL/SOCCER STADIU	**Hourly**
Video Board Operator	$50.00
Scoreboard Operator	$50.00
PA Announcer	$50.00
Camera Operator	$45.00
Replay Technician	$45.00
Sound Operator	$45.00
Temporary fence set up on artificial turf field	$45.00

SSC - Common Area/Parking Lot Rentals	
Pavilion	
Non-Profit Deposit	$1,500.00
Non-Profit Rental	$1,500/day
Commercial Deposit	$2,000.00
Commercial Rental	$2,000/day
Parking Lot Only	
Parking Lot Deposit	$1,000.00
Set Up/Tear Down	$1,000/day
Rental Fee	$1,500/day
Cleaning Fees - Common Area/Parking Lot Rentals	
Less than 1,000 people	$1,000.00
1,001 to 2,500 people	$1,500.00
More than 2,500 people	$2,000.00
SSC - Auxiliary Fields	
Non-Tournament Fees	
Deposit	$100.00
Field Rental	$65.00/hour
Tournament Fees	
Deposit	$100.00/field
Rental	$30.00/game
Cleaning Fee	$150.00/field
Lighting Fee	$25.00/hour
Concession Stand Deposit	$100.00
Game Cleaning Fee	$75/Field
Concession Stand Rental	$25.00/hour

Exhibit O

Miscellaneous

	Fee
Court Fees	
Municipal Court Building Security Fee	$3.00
Municipal Court Technology Fee	$4.00
Municipal Court Copy Fee	$1.00 per page
Business Regulations	
Closing out sale license fees - 30 days	$100.00
Closing out sale license fees - 60 days	$125.00
Closing out sale license fees - 90 days	$150.00
Door to Door Solicitors (Peddler) license	$30.00
Mobile Home/Travel Trailer Park App Fee	$10.00
Mobile Home/Travel Trailer Park License	$25 plus $1 ea.space
Mobile Home Mini Park location app	$10.00
Mobile Home Mini Park revised site plan	$10.00
City Chauffeur's license app fee	$25.00
Airport Cabstand Permit fee (per month)	$25.00
Special police officer license fee (individual)	$10.00
Special police officer license fee (firm)	$50.00
Carnival operator's license	$100.00
Carnival employee's license	$6.00
Side walk sale application fee	$4.00
Police Regulations	
Ambulance Services- Basic Life Support	$650 + $10 per mile
Ambulance Services- Advanced Life Support	$750 + $10 per mile
Ambulance Services- Advanced Level II	$850 + $10 per mile
Ambulance Waiting Charge	$200 per hour
Ambulance Service- Outside Midland County	$100.00
Food Truck Fire Inspection	$50 per inspection annually
Alarm Permit Application Fee-Commercial	$25.00
Alarm Permit Application Fee-Residential	$20.00
Alarm Permit Renewal Fee -Commercial	$20.00
Alarm Permit Renewal Fee - Residential	$15.00
Alarm Permit Service fee	$50.00
Franchises	
Telecomm Carrier on public ROW Reg. Fee-	$25.00
Franchise application and review fee	$500.00
Franchise renewal application and review fee	$500.00

Exhibit P

Right of Way

Right-of-Way License Fees and Rates for crossing property or public right-of-way owned by the City of Midland.

Fees (non-refundable):

Application Fee:	$ 1,000.00
Application Fee of Expired License:	$ 1,500.00

The City of Midland's Rate and Damage Schedule is 200% of the then-current University Lands Rate and Damage Schedule for a 10-year license.

Fees and rates will be paid at the commencement of the 10-year license in one payment.

Exhibit A

City Secretary

	Fee
Business Regulations	
Junk and secondhand goods license-Original	$25.00
Renewal of junk and secondhand good	$10.00
Alcoholic Beverage License Fee	1/2 of State Fee
Taxicab annual operating fee (each)	$200.00
Limo or Motorbus operating fee (each)	$100.00

Exhibit B

Parks

	Fee
SHOWMOBILE	
Deposit	$1,000.00
Rental Fee (minimum of 4 hours)	$62.50/hour
Extensions	$100.00
Show Lights	$200.00
Deposit for Show Lights	$500.00
PORTABLE BLEACHERS	
Deposit	$100.00
Rental Fee (per day)	$100.00
PORTABLE STAGE	
Deposit	$100.00
Rental Fee	$250.00
TRASH CANS	
Deposit	$100.00
Rental Fee (minimum of 10 cans)	$5.00/can/day
PARK PAVILION RENTAL	
Deposit	$100.00
Rental Fee 9am-10pm	$60.00
Rental Fee 9am-3pm	$30.00
Rental Fee 4pm-10pm	$40.00
BEAL RANCH HOUSE	
Deposit no Alcohol	$300.00
Deposit w/Alcohol	$500.00
Rental Fee Per Hour	$50.00
GAZEBO RENTALS - WADLEY AND BEAL	
Deposit	$100.00
Rental Fee 9 am- 3 pm	$50.00
Rental Fee 4 pm-10 pm	$50.00
Rental Fee 9 am-10 pm	$100.00
BASEBALL/SOFTBALL FIELD RENTALS	
Artifical Turf Fields Rental Fee	$65.00/hour
Deposit for Artificial Turf Field Rental	$100.00
Natural Turf Field Rental Fee	$25.00/hour
Lights	$25.00/hour
Tournament Fee	$25.00/team
Tournament Cleaning Fee	$150/field
Tournament Deposit	$100/field
Temporary fence set up on artificial turf field	$150/field
Game Cleaning Fee	$75/Field
FOOTBALL/SOCCER FIELD RENTALS	
Artifical Turf Fields Rental Fee	$65.00/hour
Deposit for Artificial Turf Field Rental	$100.00
Natural Turf Field Rental Fee	$25.00/hour
Lights	$25.00/hour
Tournament Fee	$30/game
Tournament Cleaning Fee	$150/field

Tournament Deposit	$100/field
Game Cleaning Fee	$75/Field
CONCESSION RENTALS	
Concession Stand Deposit	$100.00
Concession Stand Rental	$25.00/hour
ULMER SAND VOLLEYBALL COURT	
Deposit	$25.00
Rental Fee	$25.00/day
WHITEHOUSE RENTAL	
Deposit	$200.00
Rental Fee 10 am - 4 pm	$200.00
Rental Fee 6 pm - 12 am	$200.00
Rental Fee All Day	$400.00

Exhibit C

Recreation

		Fee
CITY POOL RATES		
Entry Fee		$5.00
Children under 2		Free
10 Punch Card		$20.00
25 Punch Card		$40.00
75 Punch Card		$80.00
Personal Cooler Admission		$10.00
Soda		$3.00
Water		$2.00
Snacks		$2.00
Swim lesson (1 week)		$20.00
Life Jacket Rental		Free
PRIVATE RENTALS		
DEPOSIT		$150.00
RENTAL FEE (2 hours)		$850.00
POOL PAVILION RENTALS		
(Doug Russell Only)		
DEPOSIT		$150.00
RENTAL FEE		$100/session
MARTIN LUTHER KING RECREATION CENTER	per hour	
Activity Room		
During Operation		$25.00
After Hours		$35.00
Deposit		$100.00
Activity Rm/with Gameroom	per hour	
During Operation		$50.00
After Hours		$70.00
Deposit		$300.00
Auditorium	per hour	
During Operation		$50.00
After Hours		$75.00
Deposit No Alcohol		$500.00
Deposit Alcohol		$750.00
Gymnasium	per hour	
During Operation		$40.00
After Hours		$60.00
Deposit		$200.00
MLK Volleyball Net Setup Fee		$15.00

Exhibit C

Recreation

		Fee
Training Room	per hour	
Sporting Events ONLY		
During Operation		$50.00
After Hours		$75.00
Deposit		$1,000.00
Daily Entrance Fee		$1.00
Monthly Membership		$15.00
MOVIE SCREEN		
Deposit		$1,000.00
Fee (Maximum 4 hours)		$500.00

Exhibit D

Health and Senior Services

	Fee
Environmental Section	
Mobile Food Vendor	
Mobile Food Vendor	$175.00
Mobile Food (Seasonal)	$105.00
Temporary Permit	$70.00
Late Fee (When not paid by specified date)	25% of Permit Fee
Food Services Establishments	
1 thru 5 employees	$150.00
6 thru 10 employees	$200.00
11 or more employees	$250.00
Deli/Meat Market/Bakery	$75.00
Farmers Market	$50.00
Late Fee (When not paid by specified date)	25% of Permit Fee
Retail Food Store	
1 thru 5 employees	$150.00
6 thru 10 employees	$200.00
11 or more employees	$250.00
Temporary Permit	$70.00
Late Fee (When not paid by specified date)	25% of Permit Fee
Child Care Programs	
Day Care	$100.00
Foster Care	$50.00
Child Care Program for after School	$50.00
Late Fee (When not paid by specified date)	25% of Permit Fee
Swimming Pool, Spa, or Water Feature Permit	
Swimming Pool or Spa Permit	$100.00
Water Feature Permit	$100.00
Non-Profit Yearly	$30.00
Non-Profit Temporary	$30.00
Re-inspection (When Establishment is shut down)	$75.00
Late Fee (When not paid by specified date)	25% of Permit Fee
Septic System Inspections	
Septic System Residential	$150.00
Septic System Commercial	$210.00
Septic re-inspection (When fails initial inspection)	$50.00
Late Fee (When not paid by specified date)	25% of Permit Fee
Late Fee (When not paid by specified date)	25% of Permit Fee

Exhibit D

Health and Senior Services

Clinical Section

Health Department Services	Fee
Infanrix/Daptacel (DTaP)	$45.00
Kinrix (DTaP & Polio)	$60.00
Pentacel (DTaP & Polio & Flu Type B)	$115.00
IPOL IPV (Polio)	$45.00
Haverix Pedi HEP A	$40.00
Engerix Pedi HEP B	$35.00
Acthib/Hiberix - HIB (Flu Type B)	$20.00
Vaxelis (DTaP, HIB, Polio & HEB B)	$150.00
Rototeq/Rotarix (Rotavirus)	$140.00
Proquad (MMR & Varicella)	$270.00
Prevnar20/Vaxneuvance 15 (Pneumococcal Conjugate)	$260.00
Pneumovax 23 (PPSV23-Pneumococcal Conjugate)	$125.00
MMR II	$95.00
Varivax (Varicella)	$175.00
Tenivac (TD-Tetanus & Diptheria)	$45.00
Boostrix/Adacel - TDAP (Tetanus Diptheria and Pertussis)	$50.00
Gardasil (HPV 9)	$280.00
Menqaudfi/Menveo (Meningitis)	$200.00
Trumenba (Meningococcal Group B)	$190.00
Bexsero (Meningococcal Group B)	$200.00
Havrix (Adult Hep A)	$80.00
Energix (3-dose Adult Hep B)	$65.00
Heplisav (2-dose Adult Hep B)	$125.00
Abrysvo/Arexvy (Adult RSV)	$295.00
Beyfortus (Infant RSV)	$500.00
RabAvert (Rabies)	$580.00
Imovax (Rabies)	$400.00
Pfizer- Infant (COVID-19)	$65.00
Pfizer- Adolescent (COVID-19)	$90.00
Pfizer- Adult (COVID-19)	$130.00
Moderna- Adult (COVID-19)	$145.00
Shingrix (Shingles)	$200.00
Infant flu	$25.00
Flu	$30.00
High Dose Flu	$65.00
Flublok	$65.00
Yellow Fever	$130.00
TB Test	$15.00
TB Clinic	$15.00
Pregnancy Test-Urine	$15.00

Exhibit D

Health and Senior Services

	Fee
Pregnancy Test - Blood	$15.00
STD Testing	$15.00
HIV Testing	$15.00
STD Clinic Treatment	$15.00
STD Clinic Retreatment	$15.00
Prep Panel	$70.00
Prep Office Visit	$15.00
Rapid GC/CT	$50.00
Rapid Trichomoniasis	$10.00
Rapid Syphilis	$20.00
Rapid HIV	$25.00
Renal Panel	$4.00
Lipid Panel	$4.00
Comprehensive Metobolic Panel (CMP)	$4.00
Complete Blood Count (CBC)	$3.00
Hemoglobin A1c	$6.00
PSA Total Screen	$8.00
Hepatitis B Surface Ab	$8.00
Hepatitis B Surface Ag	$8.00
Hepatitis C Ag	$9.00
Hepatisis C Ab	$9.00
MMR/Varicella Panel	$36.00
Administration Fees	
Insured	$60.00
TVFC 1=$10, 2=$20, >or= 3 = $30	
Fees In Red- Indicates the fee is not listed or different than stated in code.	
Refugee	$0.00
Medicaid/CHIP	$13.75
Medicare Flu or Pneumonia	$60.00

City Council Meeting

Item Number: 25

Meeting Date: September 10, 2024, September 24, 2024

To: City Council / City Manager

From: Taha Sakrani,

Subject: AN ORDINANCE ALTERING PRIMA FACIE SPEED LIMITS ALONG CERTAIN STREETS IN THE CITY; AUTHORIZING INSTALLATION OF APPROPRIATE SIGNS AND MARKINGS; REPEALING ORDINANCE NO. 10542; CONTAINING A CUMULATIVE CLAUSE; CONTAINING A SAVINGS AND SEVERABILITY CLAUSE; PROVIDING FOR A MAXIMUM PENALTY OR FINE OF TWO HUNDRED DOLLARS ($200.00); AND ORDERING PUBLICATION (DISTRICT: NONE) (ENGINEERING SERVICES) (SET THE STANDARD FOR A SAFE AND SECURE CITY)

Purpose:

Lowering the residential speed limit from 30 MPH to 25 MPH on Legacy Subdivision as requested by HOA. As per state law, the governing body of a municipality, for a highway or a part of a highway in the municipality that is not an officially designated or marked highway or road of the state highway system, may declare a lower speed limit of not less than 25 miles per hour, if the governing body determines that the prima facie speed limit on the highway is unreasonable or unsafe." [Texas Transportation Code, Sect. 545.356(b-1)].

Additionally, lowering the speed limit on Garfield to 40 MPH between Bluebird and Loop 250, consistent with the existing speed limits north of Bluebird and south of Loop 250, ensures uniformity and safety along the corridor.

Recommended City Council Action:

Approve

Fiscal Impact:

The cost will be negligible and can be accommodated within the Division's normal maintenance budget. Any signs being removed due to a speed limit change will be salvaged for reuse if in good condition, or re-sheeted or recycled if their condition is no longer

acceptable.

Strategic Priority:

(Set the Standard for a Safe and Secure City)

Discussion:

The Legal Department has prepared an ordinance amending existing ordinance no. 10542 establishing speed limits as follows:

Anthem Road (both directions)
25 mph – in its entirety
Arlington Road (both directions)
25 mph - in its entirety
Bald Eagle Court (both directions)
25 mph – in its entirety
Bunker Hill Road (both directions)
25 mph - in its entirety
Colony Road (both directions)
25 mph - in its entirety
Commonwealth Road (both directions)
25 mph - in its entirety
Constitution Way (both directions)
25 mph - in its entirety
Courage Place (both directions)
25 mph - in its entirety
Crown Point Court (both directions)
25 mph – in its entirety
Daisy Road (both directions)
25 mph – in its entirety
Dupont Court (both directions)
25 mph – in its entirety
Foggy Bottom Court (both directions)
25 mph - in its entirety
Fortitude Court (both directions)
25 mph – in its entirety
Founders (both directions)
25 mph - in its entirety
Gallantry Lane (both directions)
25 mph - in its entirety
Hall of Fame Boulevard (both directions)
25 mph - from the centerline of Avalon Drive to the centerline of Minuteman Road
Jamestown Street (both directions)
25 mph – in its entirety
July Fourth Road (both directions)
25 mph - in its entirety

L’Enfant Lane (both directions)
25 mph – in its entirety
McPherson Lane (both directions)
25 mph - in its entirety
Minuteman Road (both directions)
25 mph - in its entirety
Musket Drive (both directions)
25 mph - in its entirety
Patriot Parkway (both directions)
25 mph - in its entirety
Pentagon Road (both directions)
25 mph - in its entirety
Potomac Parkway (both directions)
25 mph - in its entirety
Revere Place (both directions)
25 mph – in its entirety
Thomas Paine Road (both directions)
25 mph – in its entirety
Valor Court (both directions)
25 mph - in its entirety
Valor Lane (both directions)
25 mph - in its entirety
Vanguard Road (both directions)
25 mph - in its entirety
Victory Parkway (both directions)
25 mph – in its entirety
Viva Max (both directions)
25 mph - in its entirety
Garfield Street (both directions)
40 mph - from the northern terminus of Garfield Street to the centerline of Wadley Avenue

Staff recommends approval of this ordinance.

José E. Ort

City Manager’s Office

ORDINANCE NO. _____

AN ORDINANCE ALTERING PRIMA FACIE SPEED LIMITS ALONG CERTAIN STREETS IN THE CITY; AUTHORIZING INSTALLATION OF APPROPRIATE SIGNS AND MARKINGS; REPEALING ORDINANCE NO. 10542; CONTAINING A CUMULATIVE CLAUSE; CONTAINING A SAVINGS AND SEVERABILITY CLAUSE; PROVIDING FOR A MAXIMUM PENALTY OR FINE OF TWO HUNDRED DOLLARS ($200.00); AND ORDERING PUBLICATION

WHEREAS, under Section 542.202 and Section 545.356 of the Texas Transportation Code, the City Council is authorized to make certain findings based upon engineering and traffic investigations and to alter the prima facie speed limits on City streets or portions thereof; and

WHEREAS, the City Traffic Engineer has made studies and surveys of the traffic flowing along certain streets within the City limits of Midland, Texas; and

WHEREAS, the Council finds and determines from the above mentioned studies that certain streets, as hereinafter described in this ordinance, should be speed zoned to rates hereinafter set out in this ordinance;

NOW, THEREFORE, BE IT ORDAINED BY THE CITY COUNCIL OF THE CITY OF MIDLAND, TEXAS:

SECTION ONE. That no person shall drive a vehicle on those certain streets as set out below at a speed greater than is reasonable or prudent under the circumstances then existing. The speed limits specified in this Section shall be lawful, but any speed in excess of the limits specified in this Section shall be prima facie evidence that the speed is not reasonable or prudent and is unlawful. Such speed limits are hereby fixed at the rates of speed indicated for vehicles traveling upon the named streets and highways, or parts thereof, described as follows:

A Street (both directions)

40 mph - from the northern terminus of A Street to the centerline of Loop 250

40 mph - from the centerline of Veterans Airpark Lane to the centerline of Scharbauer Drive

35 mph - from the centerline of Scharbauer Drive to the centerline of Wall Street

30 mph - from the centerline of Wall Street to the southern terminus of A Street

Anthem Road (both directions)

25 mph - in its entirety

Arlington Road (both directions)

25 mph - in its entirety

Ashwood Court (both directions)

25 mph - in its entirety

Avalon Drive (both directions)

40 mph - from the northern terminus of Avalon Drive to the centerline of Briarwood Avenue

40 mph - from the centerline of State Highway 191 to the southern terminus of Avalon Drive

Bald Eagle Court (both directions)

25 mph - in its entirety

Bent Tree Trail (both directions)

25 mph - in its entirety

Blackwood Drive (both directions)

25 mph - in its entirety

Bluebird Lane (both directions)

35 mph - from the centerline of Midland Drive to the centerline of Kingston Drive

25 mph - from the centerline of Kingston Drive to the eastern terminus of Bluebird Lane

Brandy Hill Road (both directions)

25 mph - in its entirety

Brentwood Drive (both directions)

25 mph - in its entirety

Briaroaks Court (both directions)

25 mph - in its entirety

Briaroaks Drive (both directions)

25 mph - in its entirety

Briarwood Avenue (both directions)

45 mph - from the centerline of State Highway 158 to the centerline of Avalon Drive

40 mph - from the centerline of Avalon Drive to the centerline of Mathis Street

35 mph - from the centerline of Mathis Street to the centerline of Midland Drive

Bunker Hill Road (both directions)

25 mph - in its entirety

Business State Highway 349C (both directions)

65 mph - from the northern boundary of Midland County to a point 797 feet north of Occidental Parkway

50 mph - from a point 797 feet north of Occidental Parkway to a point 370 feet south of the centerline of the south service road of Loop 250

Candlestick Drive (both directions)

25 mph - in its entirety

Cardinal Lane (both directions)

30 mph - from the centerline of Oriole Drive to the centerline of Midland Drive

35 mph - from the centerline of Midland Drive to the centerline of Midkiff Road

Castle Wood Drive (both directions)

25 mph - in its entirety

Centerview (both directions)

25 mph - in its entirety

Champions Drive (both directions)

25 mph - from the centerline of Tradewinds Boulevard to the centerline of Koufax Court

Clemente Court (both directions)

25 mph - in its entirety

Coliseum Court (both directions)

25 mph - in its entirety

Colony Road (both directions)

25 mph - in its entirety

Colt Court (both directions)

25 mph - in its entirety

Comiskey Court (both directions)

25 mph - in its entirety

Commonwealth Road (both directions)

25 mph - in its entirety

Constitution Way (both directions)

25 mph - in its entirety

Courage Place (both directions)

25 mph - in its entirety

Coyote Trail (both directions)

40 mph - in its entirety

Cranston Place (both directions)

25 mph - in its entirety

Crestgate Avenue (both directions)

25 mph - from the centerline of Midland Drive to the centerline of Gateway Street

Crosley Drive (both directions)

25 mph - in its entirety

Crown Point Court (both directions)

25 mph - in its entirety

Cuthbert Avenue (both directions)

30 mph - from the western terminus of Cuthbert Avenue to the centerline of Midkiff Road

35 mph - from the centerline of Midkiff Road the centerline of Ward Street

25 mph - from the centerline of Ward Street to the centerline of Garfield Street

25 mph - from the centerline of Garfield Street to a point 220 feet east of F Street

30 mph - from a point 220 feet east of F Street to the eastern terminus of Cuthbert Avenue

Daisy Road (both directions)

25 mph - in its entirety

Deauville Boulevard (both directions)

40 mph - from the centerline of Avalon Drive to the centerline of Loop 250

Deeanna Lane (both directions)

25 mph - in its entirety

Devlin Place (both directions)

25 mph - in its entirety

DiMaggio Court (both directions)

25 mph - in its entirety

DiMaggio Drive (both directions)

25 mph - in its entirety

Drexel Court (both directions)

25 mph - in its entirety

Driftwood Drive (both directions)

25 mph - in its entirety

Dupont Court (both directions)

25 mph - in its entirety

Fairgrounds Road (both directions)

45 mph - from the northern terminus of Fairgrounds Road to the centerline of Loop 250

50 mph - from the centerline of Loop 250 to the southern City limits

Florida Avenue (both directions)

35 mph - from the centerline of Garfield Street to the centerline of Big Spring Street

Foggy Bottom Court (both directions)

25 mph - in its entirety

Fortitude Court (both directions)

25 mph - in its entirety

Founders (both directions)

25 mph - in its entirety

Fringewood Drive (both directions)

25 mph - in its entirety

Gallantry Lane (both directions)

25 mph - in its entirety

Garfield Street (both directions)

40 mph - from the northern terminus of Garfield Street to the centerline of Wadley Avenue

35 mph - from the centerline of Wadley Avenue to the centerline of Michigan Avenue

Gehrig Avenue (both directions)

25 mph - in its entirety

Gladewood Drive (both directions)

25 mph - in its entirety

Glen Mist Drive (both directions)

25 mph - in its entirety

Golden Gate Drive (both directions)

40 mph - from the northern terminus of Golden Gate Drive to the centerline of Briarwood Avenue

Golf Course Road (both directions)

35 mph - from the centerline of Andrew Highway/Alpine Street to the centerline of Scharbauer Drive

30 mph - from the centerline of Scharbauer Drive to the centerline of A Street

30 mph - from the centerline of Big Spring Street to the centerline of Fairgrounds Road

35 mph - from the centerline of Fairgrounds Road to the eastern terminus of Golf Course Road

Grassland Boulevard (both directions)

25 mph - in its entirety

Green Tree Boulevard (both directions)

35 mph - from the western terminus of Green Tree Boulevard to the centerline of Holiday Hill Road

25 mph - from the centerline of Holiday Hill Road to the centerline of Midland Drive

Greenridge (both directions)

25 mph - in its entirety

Griffith Court (both directions)

25 mph - in its entirety

Griffith Drive (both directions)

25 mph - from the centerline of Deauville Boulevard to the centerline of Candlestick Drive

Hall of Fame Boulevard (both directions)

25 mph - from the centerline of Avalon Drive to the centerline of Minuteman Road

Hathaway Court (both directions)

25 mph - in its entirety

Haywood Drive (both directions)

25 mph - in its entirety

Heartland Avenue (both directions)

25 mph - in its entirety

Heartland Court (both directions)

25 mph - in its entirety

Hereford Boulevard (both directions)

25 mph - in its entirety

Highland Boulevard (both directions)

25 mph - in its entirety

Highland Court (both directions)

25 mph - in its entirety

Hillcrest Court (both directions)

25 mph - in its entirety

Hillcrest Place (both directions)

25 mph - in its entirety

Holiday Hill Road (both directions)

40 mph - from the northern City limits to the centerline of Loop 250

Homeland Court (both directions)

25 mph - in its entirety

Homeland Drive (both directions)

25 mph - in its entirety

Homestead Boulevard (both directions)

25 mph - in its entirety

Homestead Court (both directions)

25 mph - in its entirety

Humble Avenue (both directions)

25 mph - from the centerline of Scharbauer Drive to the centerline of Big Spring Street

Illinois Avenue (both directions)

35 mph - from the centerline of Thomason Drive to the centerline of Andrews Highway

25 mph - from the centerline of Andrews Highway to the centerline of N Street

35 mph - from the centerline of N Street to the centerline of A Street

30 mph - from the centerline of A Street to the centerline of Front Street

Ironwood Drive (both directions)

25 mph - in its entirety

Island Circle (both directions)

25 mph - in its entirety

Island Drive (both directions)

25 mph - in its entirety

Jadewood Drive (both directions)

25 mph - in its entirety

Jamestown Street (both directions)

25 mph - in its entirety

July Fourth Road (both directions)

25 mph - in its entirety

King Kelly Court (both directions)

25 mph - in its entirety

Kirkwood Drive (both directions)

25 mph - in its entirety

Koufax Court (both directions)

25 mph - in its entirety

L'Enfant Lane (both directions)

25 mph - in its entirety

La Force Boulevard (both directions)

35 mph - from the centerline of Business Interstate 20 to the centerline of Banks

Drive

30 mph - from the centerline of Banks Drive to a point 590 feet east of Banks Drive

20 mph - from a point 590 feet east of Banks Drive to a point 1,155 feet east of Banks Drive

15 mph - from a point 1,155 feet east of Banks Drive to a point 2,560 feet east of Banks Drive

30 mph - from a point 2,560 feet east of Banks Drive to the centerline of La Force Boulevard

Lamesa Road (northbound)

45 mph - from the southern City limits to a point 195 feet north of the centerline of Taylor Avenue

40 mph - from a point 195 feet north of the centerline of Taylor Avenue to a point 245 feet north of the centerline of Wall Street

35 mph - from a point 245 feet north of the centerline of Wall Street to a point 170 feet north of Wadley Avenue

45 mph - from a point 170 feet north of Wadley Avenue to the centerline of the north service road of Loop 250

Lamesa Road (southbound)

45 mph - from the centerline of the north service road of Loop 250 to a point 130 feet south of the centerline of Wadley Avenue

35 mph - from a point 130 feet south of the centerline of Wadley Avenue to a point 140 feet north of the centerline of Missouri Avenue

40 mph - from a point 140 feet north of the centerline of Missouri Avenue to a point 180 feet south of the centerline of Taylor Avenue

45 mph - from a point 180 feet south of the centerline of Taylor Avenue to the southern City limits

Legends Boulevard (both directions)

25 mph - in its entirety

Mac Drive (both directions)

25 mph - in its entirety

Mantle Court (both directions)

25 mph - in its entirety

Mays Drive (both directions)

25 mph - in its entirety

McPherson Lane (both directions)

25 mph - in its entirety

Mel Ott Lane (both directions)

25 mph - in its entirety

Memorial Court (both directions)

25 mph - in its entirety

Midkiff Road (both directions)

40 mph - from the northern terminus of Midkiff Road to the centerline of Wall Street

35 mph - from the centerline of Wall Street to the centerline of Industrial Avenue

40 mph - from the centerline of Industrial Avenue to the centerline of Stokes Avenue

45 mph - from the centerline of Stokes Avenue to the southern City limits

Midland Drive (both directions)

35 mph - from the northern terminus of Midland Drive to the centerline of Green Tree Boulevard

45 mph - from the centerline of Green Tree Boulevard to the centerline of Loop 250

35 mph - from the centerline of Andrews Highway to the centerline of Wall Street

Mile High Lane (both directions)

25 mph - in its entirety

Minuteman Road (both directions)

25 mph - in its entirety

Mockingbird Lane (both directions)

30 mph - from the western terminus of Mockingbird Lane to the centerline of Midland Drive

45 mph - from the centerline of Midland Drive to the centerline of Midkiff Road

40 mph - from the centerline of Midkiff Road to the centerline of Big Spring Street

45 mph - from the centerline of Big Spring Street to the eastern terminus of Mockingbird Lane

Mosswood Drive (both directions)

25 mph - in its entirety

Musial Way (both directions)

25 mph - in its entirety

Musket Drive (both directions)

25 mph - in its entirety

Neely Avenue (both directions)

30 mph - in its entirety

Nolan Ryan Drive (both directions)

25 mph - in its entirety

Olympic Court (both directions)

25 mph - in its entirety

O'Rourke Street (both directions)

25 mph - in its entirety

Pagewood Drive (both directions)

25 mph - in its entirety

Patriot Parkway (both directions)

25 mph - in its entirety

Pentagon Road (both directions)

25 mph - in its entirety

Polo Parkway (both directions)

25 mph - from the centerline of Loop 250 to the northern terminus of Polo Parkway

Potomac Parkway (both directions)

25 mph - in its entirety

Prairie Ridge Drive (both directions)

25 mph - in its entirety

Rangers Court (both directions)

25 mph - in its entirety

Rankin Highway (both directions)

30 mph - from the centerline of Interstate 20 to the centerline of Business Interstate 20

Revere Place (both directions)

25 mph - in its entirety

Ridgemont Court (both directions)

25 mph - in its entirety

Ridgemont Place (both directions)

25 mph - in its entirety

Riverfront Drive (both directions)

25 mph - in its entirety

Roadrunner Trail (both directions)

40 mph - in its entirety

Rustic Trail (both directions)

25 mph - in its entirety

Scharbauer Drive (both directions)

35 mph - from the centerline Golf Course Road to the eastern terminus of Scharbauer Drive

Sequoia Drive (both directions)

25 mph - in its entirety

Shea Lane (both directions)

25 mph - in its entirety

Sloan Field Boulevard (both directions)

35 mph - from the centerline of Wright Drive to the centerline of Windecker Street

30 mph - from to centerline of Windecker Street to the eastern terminus of Sloan Field Boulevard into La Force Boulevard

Solomon Lane (both directions)

30 mph - in its entirety

Spahn Street (both directions)

25 mph - in its entirety

State Highway 349 (both directions)

65 mph - from the northern City limits to the southern boundary of Martin County

Sterling Court (both directions)

25 mph - in its entirety

Sterling Place (both directions)

25 mph - in its entirety

Stonecrest (both directions)

25 mph - in its entirety

Sundance Court (both directions)

25 mph - in its entirety

Sundance Place (both directions)

25 mph - in its entirety

Teakwood Trace (both directions)

25 mph - in its entirety

Thomas Paine Road (both directions)

25 mph - in its entirety

Thomason Drive (both directions)

35 mph - from the western terminus of Thomason Drive to the centerline of Holly Drive/Anetta Drive

30 mph - from the centerline of Holly Drive/Anetta Drive to the centerline of Wall Street

Three Rivers Lane (both directions)

25 mph - in its entirety

Todd Drive (both directions)

40 mph - from the northern terminus of Todd Drive to the centerline of Golf Course Road (within the City limits)

30 mph - from the centerline of Golf Course Road to the centerline of Business Interstate 20

Tradewinds Boulevard (both directions)

35 mph - from the centerline of the south service road of State Highway 191 to the centerline of Thomason Drive

40 mph - from the centerline of Thomason Drive to the centerline of the north service road of Business Interstate 20

Tumbleweed Trail (both directions)

40 mph - in its entirety

Valor Court (both directions)

25 mph - in its entirety

Valor Lane (both directions)

25 mph - in its entirety

Vanguard Road (both directions)

25 mph - in its entirety

Veterans Airpark Lane (both directions)

40 mph - in its entirety

Victory Parkway (both directions)

25 mph - in its entirety

Viva Max (both directions)

25 mph - in its entirety

Wadley Avenue (both directions)

40 mph - from the western terminus of Wadley Avenue to the centerline of Big Spring Street

35 mph - from the centerline of Big Spring Street to the centerline of Lamesa Road

45 mph - from the centerline of Lamesa Road to the eastern terminus of Wadley Avenue

Wagner Drive (both directions)

25 mph - in its entirety

Wagner Street (both directions)

25 mph - in its entirety

Wall Street (both directions)

35 mph - from the centerline of Andrews Highway to the centerline of B Street

30 mph - from the centerline of B Street to the centerline of Front Street

Winddrift (both directions)

25 mph - in its entirety

Wright Drive (both directions)

35 mph - in its entirety

SECTION TWO. That the above speed zoning is based upon findings and determinations of the City Council made as a result of certain traffic surveys and studies made by the City Traffic Engineer.

SECTION THREE. That the Traffic Engineer of the City of Midland is hereby authorized and directed to install appropriate speed zone signs commensurate with the provisions of this ordinance.

SECTION FOUR. That any person violating the prima facie speed limits established by this ordinance shall, upon conviction, be punished by a fine of not less than one Dollar ($1.00) nor more than Two Hundred Dollars ($200.00), as fully prescribed by Section 542.401 of the Texas Transportation Code.

SECTION FIVE. That Ordinance No. 10542 is hereby expressly repealed; and the provisions of this ordinance are to be cumulative of all other ordinances or parts of ordinances governing or regulating the same subject matter as that covered herein; provided,

however, that all prior ordinances or parts of ordinances inconsistent with or in conflict with any of the provisions of this ordinance are hereby expressly repealed to the extent of any such inconsistency or conflict.

Not repealed, amended, or in any way affected by this ordinance are those ordinances establishing speed limits in school zones or school crossings and those ordinances establishing temporary regulatory construction speed limits.

SECTION SIX. That repeal of the ordinances, or parts of ordinances, effectuated by the enactment of this ordinance shall not be construed as abating any actions pending under or by virtue of such ordinances; or as discontinuing, abating, modifying or altering any penalty accruing or to accrue; or as affecting the liability of any person, firm or corporation; or as waiving any right of the municipality under any section or provision existing at the time of the passage of this ordinance.

SECTION SEVEN. If any section, subsection, sentence, clause or phrase of this ordinance is, for any reason, held to be unconstitutional or invalid, such holding shall not affect the validity of the remaining portions of this ordinance. The Council of the City of Midland hereby declares that it would have passed this ordinance and each section, subsection, sentence, clause, or phrase hereof irrespective of the fact that any one or more sections, subsections, sentences, clauses, or phrases be declared unconstitutional or invalid.

SECTION EIGHT. The City Secretary is hereby authorized and directed to publish the descriptive caption of this ordinance in the manner and for the length of time prescribed by the law as an alternative method of publication.

The above and foregoing ordinance was duly proposed, read in full and adopted on first reading, the _____ day of _____, A.D., 2024; and passed to second reading on motion of Council member _____, seconded by Council member _____, by the following vote:

Council members voting "AYE":

Council members voting "NAY":

The above and foregoing ordinance was read in full and finally adopted by the following vote upon motion of Council member _____, seconded by Council member _____, on the _____ day of _____, A.D., 2024, at a regular meeting of the City Council:

Council members voting "AYE":

Council members voting "NAY":

PASSED AND APPROVED THIS _____ day of _____, A.D., 2024.

_____
Lori Merritt Blong, Mayor

ATTEST:

_____
Marcia Bentley-German, City Secretary

APPROVED AS TO CONTENT
AND COMPLETENESS:

_____
Gabe McClelland, Engineering Services Director

APPROVED ONLY AS TO FORM:

_____
John Ohnemiller, City Attorney

City Council Meeting

Item Number: 26

Meeting Date: September 24, 2024

To: City Council / City Manager

From: Daniel Humbert, Senior Planner

Subject: **AN ORDINANCE GRANTING A SPECIAL EXCEPTION FOR LOT 2, BLOCK 2, HOLLANDALE HEIGHTS ADDITION, BLOCKS 1 AND 2 REPLAT, CITY AND COUNTY OF MIDLAND, TEXAS (THE "SUBJECT LOT"), BY PERMITTING OFF-STREET PARKING ON LOT 12, BLOCK 1, SUN GARDEN VILLAGE ADDITION, CITY AND COUNTY OF MIDLAND, TEXAS (THE "PARKING LOT"), SAID PARKING LOT BEING MORE THAN 150 FEET AWAY FROM THE BUILDING OR STRUCTURE ON THE SUBJECT LOT (THE SUBJECT LOT BEING GENERALLY LOCATED AT THE NORTHEAST CORNER OF THE INTERSECTION OF NORTH LAMESA ROAD AND EAST DORMARD AVENUE); CONTAINING A CUMULATIVE CLAUSE; CONTAINING A SAVINGS AND SEVERABILITY CLAUSE; PROVIDING FOR A MAXIMUM PENALTY OR FINE OF TWO THOUSAND DOLLARS ($2,000.00); ORDERING RECORDATION BY THE CITY SECRETARY IN THE DEED RECORDS OF MIDLAND COUNTY, TEXAS; AND ORDERING PUBLICATION**

Purpose:

Natalie London, on behalf of Yucca Blossom Montessori, is requesting an increased separation distance between a proposed parking lot at 1100 East Dormard Avenue and the principal building at 2908 North Lamesa Road.

Recommended City Council Action:

No action.

Fiscal Impact:

No City funds are required to process this request.

Discussion:

The applicant is requesting additional parking on a separate lot than the subject lot. Per Section 6.02 – *Off-Street Parking and Loading Requirements*, vehicle parking shall be provided within 150 feet of such building or structure. The distance between the proposed parking lot and principal building is approximately 195 feet being that it is on a lot on the opposite side of the Dormard Street. Therefore, a special exception is required to proceed.

This request has been circulated to all pertinent City departments for review. Below are the departments' comments.

Fire: (Approved)

All future development shall meet the requirements of IFC 2015 ed. and local ordinances.

Building: (Approved)

No issues. All future structures must adhere to the 2018 International Building Codes, the 2015 International Energy Code, the 2023 NEC requirements, the 2015 International Fire Codes, local city ordinances, zoning requirements, established setbacks, oil and gas considerations, and floodplain requirements if necessary. Code versions are subject to change depending on the time of new code editions adopted in the City of Midland and date of permit application.

Engineering: (Approved)

No objection. [For Applicant's Information Only.]

Transportation: (Approved)

No comments.

Planning (No Action):

There is no hardship that would warrant a special exception for this request.

Staff recommends no action of this request. However, should Council approve it, staff recommends that it be subject to condition A.

Condition:

A. The Excepted Parking shall be limited to Lot 12, Block 1, Sun Garden Village Addition, City and County of Midland, Texas (the "Parking Lot"). For the avoidance of doubt, off-street parking more than 150 feet away from the building or structure on the Subject Lot shall be prohibited except on the Parking Lot.

Letters of Objection:

Staff has not received any letters of objection as of September 18, 2024.

Attachments:

Application
Site Plan
Maps
PowerPoint Presentation

City Manager's Office

ORDINANCE NO. _____

AN ORDINANCE GRANTING A SPECIAL EXCEPTION FOR LOT 2, BLOCK 2, HOLLANDALE HEIGHTS ADDITION, BLOCKS 1 AND 2 REPLAT, CITY AND COUNTY OF MIDLAND, TEXAS (THE "SUBJECT LOT"), BY PERMITTING OFF-STREET PARKING ON LOT 12, BLOCK 1, SUN GARDEN VILLAGE ADDITION, CITY AND COUNTY OF MIDLAND, TEXAS (THE "PARKING LOT"), SAID PARKING LOT BEING MORE THAN 150 FEET AWAY FROM THE BUILDING OR STRUCTURE ON THE SUBJECT LOT (THE SUBJECT LOT BEING GENERALLY LOCATED AT THE NORTHEAST CORNER OF THE INTERSECTION OF NORTH LAMESA ROAD AND EAST DORMARD AVENUE); CONTAINING A CUMULATIVE CLAUSE; CONTAINING A SAVINGS AND SEVERABILITY CLAUSE; PROVIDING FOR A MAXIMUM PENALTY OR FINE OF TWO THOUSAND DOLLARS ($2,000.00); ORDERING RECORDATION BY THE CITY SECRETARY IN THE DEED RECORDS OF MIDLAND COUNTY, TEXAS; AND ORDERING PUBLICATION

WHEREAS, the City Council modified the authority of the Board of Adjustment in Title XI, Chapter 1, Section 7 ("Section 11-1-7") of the Midland City Code; and

WHEREAS, Section 11-1-7 provides for the consideration of requests for special exceptions to the Midland Zoning Ordinance; and

WHEREAS, the Council finds that satisfactory evidence has been presented that the use to be authorized by the granting of the special exception will not be detrimental to the health, safety, comfort and welfare of the occupants of the land area near the tract on which the use to be allowed by special exception will be located; and

WHEREAS, the Council finds that it is clearly and specifically authorized by the terms of Section 11-1-7 to grant such a special exception, and said exception will be in harmony with the general purposes and intent of the zoning provisions of the Midland City Code; and

WHEREAS, after a full and fair public hearing at which all parties in interest were offered an opportunity to be heard, all pursuant to law, the Council finds it to be in the public interest to grant a special exception to the Zoning Ordinance, pursuant to Section 11-1-7, for

the purposes herein stated, subject to special conditions;

NOW, THEREFORE, BE IT ORDAINED BY THE CITY COUNCIL OF THE CITY OF MIDLAND, TEXAS:

SECTION ONE. That a special exception is hereby granted for the property described as Lot 2, Block 2, Hollandale Heights Addition, Blocks 1 and 2 Replat, City and County of Midland, Texas (the "Subject Lot"). Said special exception shall allow off-street parking more than 150 feet away from the building or structure on the Subject Lot (the "Excepted Parking").

SECTION TWO. Said special exception is subject to the following special condition:

> The Excepted Parking shall be limited to Lot 12, Block 1, Sun Garden Village Addition, City and County of Midland, Texas (the "Parking Lot"). For the avoidance of doubt, off-street parking more than 150 feet away from the building or structure on the Subject Lot shall be prohibited except on the Parking Lot.

SECTION THREE. The provisions of this ordinance are to be cumulative of all other ordinances or parts of ordinances governing or regulating the same subject matter as that covered herein; provided, however, that all prior ordinances or parts of ordinances inconsistent with or in conflict with any of the provisions of this ordinance are hereby expressly repealed to the extent of any such inconsistency or conflict.

SECTION FOUR. If any section, subsection, sentence, clause or phrase of this ordinance is, for any reason, held to be unconstitutional or invalid, such holding shall not affect the validity of the remaining portions of this ordinance. The Council of the City of Midland hereby declares that it would have passed this ordinance and each section, subsection, sentence, clause, or phrase hereof irrespective of the fact that any one or more sections, subsections, sentences, clauses, or phrases be declared unconstitutional or invalid.

SECTION FIVE. The penalty for violation of this ordinance shall be in accordance with the general penalty provisions contained in Section 1-3-1 of the City Code of Midland, Texas, which provides for a fine not exceeding two thousand dollars ($2,000.00).

SECTION SIX. The City Secretary is hereby authorized and directed to file this ordinance with the Office of the County Clerk for purposes of recordation.

SECTION SEVEN. The City Secretary is hereby authorized and directed to publish the descriptive caption of this ordinance in the manner and for the length of time prescribed by the law as an alternative method of publication.

The above and foregoing ordinance was duly proposed, read in full and adopted on first reading, the _____ day of _____, A.D., 2024; and passed to second reading on motion of Council member _____, seconded by Council member _____, by the following vote:

Council members voting "AYE":

Council members voting "NAY":

The above and foregoing ordinance was read in full and finally adopted by the following vote upon motion of Council member _____, seconded by Council member _____, on the _____ day of _____, A.D., 2024, at a regular meeting of the City Council:

Council members voting "AYE":

Council members voting "NAY":

PASSED AND APPROVED THIS _____ day of _____, A.D., 2024.

_____
Lori Merritt Blong, Mayor

ATTEST:

_____
Marcia Bentley-German, City Secretary

APPROVED AS TO CONTENT
AND COMPLETENESS:

_____
Elizabeth Triggs, Planning and Development Officer

APPROVED ONLY AS TO FORM:

_____
John Ohnemiller, City Attorney

MIDLAND
Planning Division

Special Exception Application

Project Number: _____

Case Number: _____

Applicant *(if acting as Agent, see affidavit on page 2)* Printed Name: Natalie London		Phone (2547)188779 Email natalie.london@yuccabl	
Address 1100 Dormard Ave	City Midland	State TX	Zip 79705

Property Owner Printed Name: Yucca Blossom Montessori		Phone (2547)188779 Email natalie.london@yuccablossomr	
Address 2908 N. Lamesa Rd	City Midland	State TX	Zip 79705

Representative *(if different from Applicant or Property Owner)* Firm: N/A Printed Name: Natalie London		Phone (2547)188779 Email natalie.london@yuccab	
Address	City	State	Zip

Street Address: 1100 Dormard Ave.

Legal Description
Lot: 012 Block: 001 Subdivision: SUN GARDEN VILLAGE

Current Zoning: SF-2

This property qualifies as an exception to the City Code because:

- ☐ It is an expansion of a nonconforming use, expansion of existing education facility across the street.
- ☐ There are existing nonconforming structures in the area.
- ☐ The addition of architectural or other projections of a minor extent.

Reason for Request: For use of 1100 Dormard as an extension of Yucca Blossom Montessori across the street for educational and office purposes.
Specific request to meet parking requirement according to 6.02 E Section 26

Submittal and Fees

Items to be submitted with this application form:

- Application Fee – Payable to the 'City of Midland'
- Dimensioned Site Plan showing:
  - Parking
  - Building Footprint
- Digital Copies of Site Plan (PDF/JPEG)

Signatures	
Applicant (signature): Natalie London	Date 7/26/2024
Applicant (printed): Natalie London	
Property Owner (signature): Natalie London	Date 7/26/2024
Property Owner (printed): Natalie London representing Yucca Blossom Montessori	

The Special Exception shall be considered officially received in the Planning office only when it has been submitted in full compliance with the provisions of Section 212 of the Texas Local Government Code and the Zoning Code of Ordinances of the City of Midland and when such required items for the application are also received.

All materials, including exhibits, submitted in support of an application, or displayed during a public hearing, shall remain the property of the City of Midland.

If an agent is authorized by the property owner to file and execute the application on behalf of the property owner, the agent must complete the affidavit below.

STATE OF TEXAS
COUNTY OF MIDLAND

Before me, the undersigned authority, on this day personally appeared _____ who, being by me duly sworn, upon oath says: That (s)he is authorized by _____, the owner of the above described property, to fully represent him/her in this application and that (s)he had the legal right, power and authority to sign said owner's name hereto as his/her attorney in fact.

_____
Authorized Agent (*signature*)

Subscribed and sworn to before me, this _____ day of _____, 20 ___, to certify which witness my hand and seal of office.

_____
NOTARY PUBLIC, MIDLAND COUNTY, TEXAS

FOR OFFICE USE ONLY

☑ Property Owner Authorization	☑ Dimensioned Site Plan
☑ Application Fee Check # 1904	☐ Plans in Digital Format (PDF/JPEG) to landon
Received By: Alexis	Date: 8/8/24

****Application will not be considered for scheduling until reviewed by a planner.****

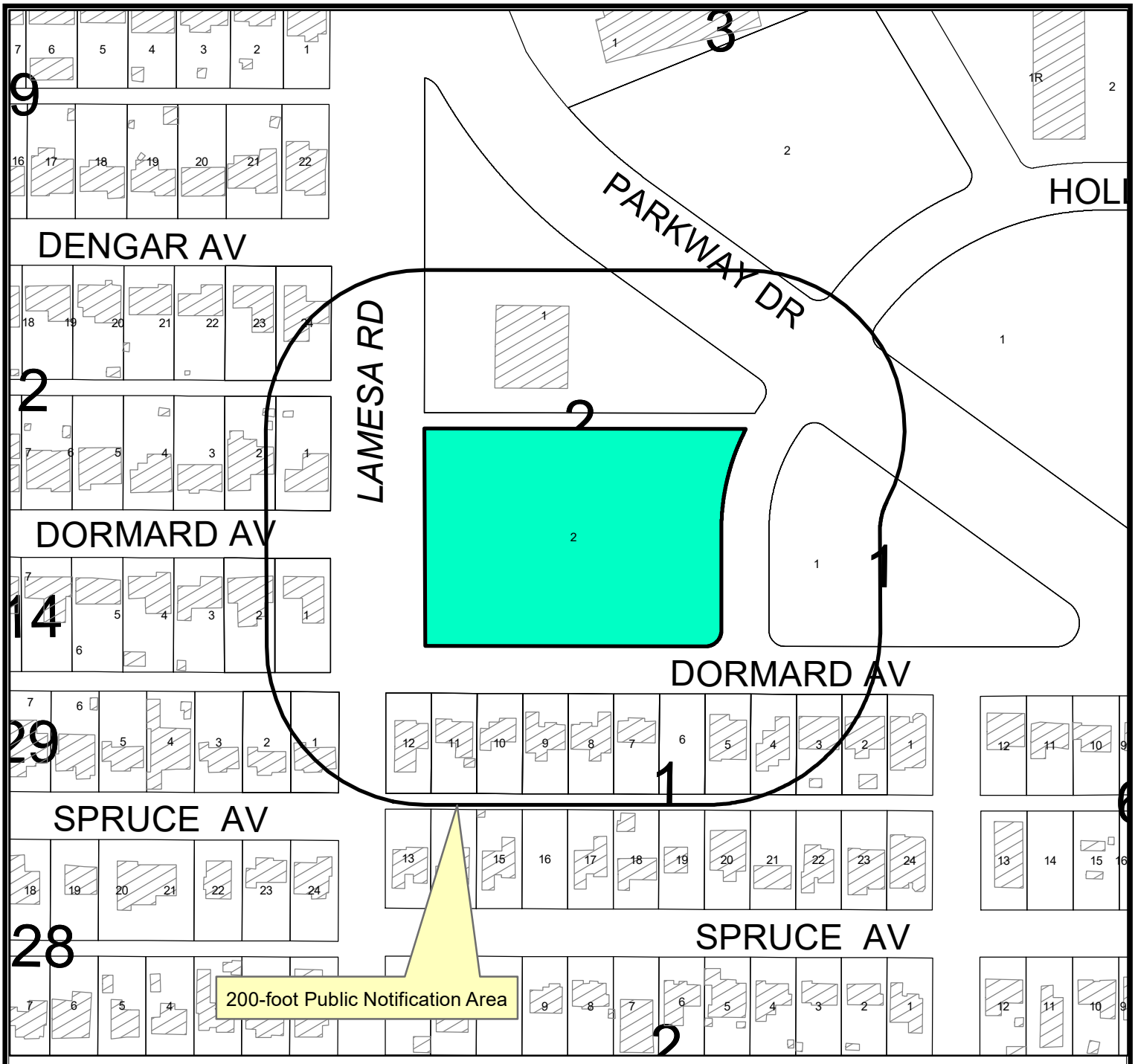

Location Map

E-24-0128 **Scale: 1" = 180'**

Consider a request by Natalie London, on behalf of Yucca Blossom Montessori, for a Special Exception from the City of Midland Zoning Ordinance, Section 6.02 – Off-Street Parking and Loading Requirements, by permitting off-street parking for Lot 2, Block 2, Hollandale Heights Addition, Block 1 and 2 Replat, City and County of Midland, Texas (the "Subject Lot"), on Lot 12, Block 1, Sun Garden Village, City and County of Midland, Texas (the "Parking Lot"), said Parking Lot being more than 150 feet away from the building or structure on the Subject Lot

(the Subject Lot being generally located northeast of the intersection of North Lamesa Road and East Dormard Avenue) (Council District 2)

LEGEND

- CITY LIMITS
- PARCEL
- PRIVATE BLDGS

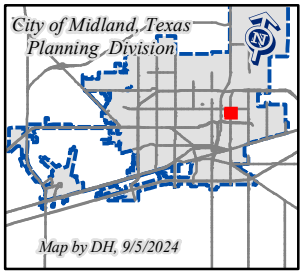

©THE CITY OF MIDLAND - 2021

THIS DATA IS NOT A SUBSTITUTION FOR A SURVEY AND NOR IS IT DESIGNED TO BE USED AS THE ONLY TOOL IN PERMITTING OR OTHER DECISIONS BASED SOLELY ON THE INFORMATION CONTAINED HEREIN.

THE CITY OF MIDLAND SHALL NOT BE RESPONSIBLE FOR ANY DECISIONS BASED UPON THE USE OF THIS DATA.

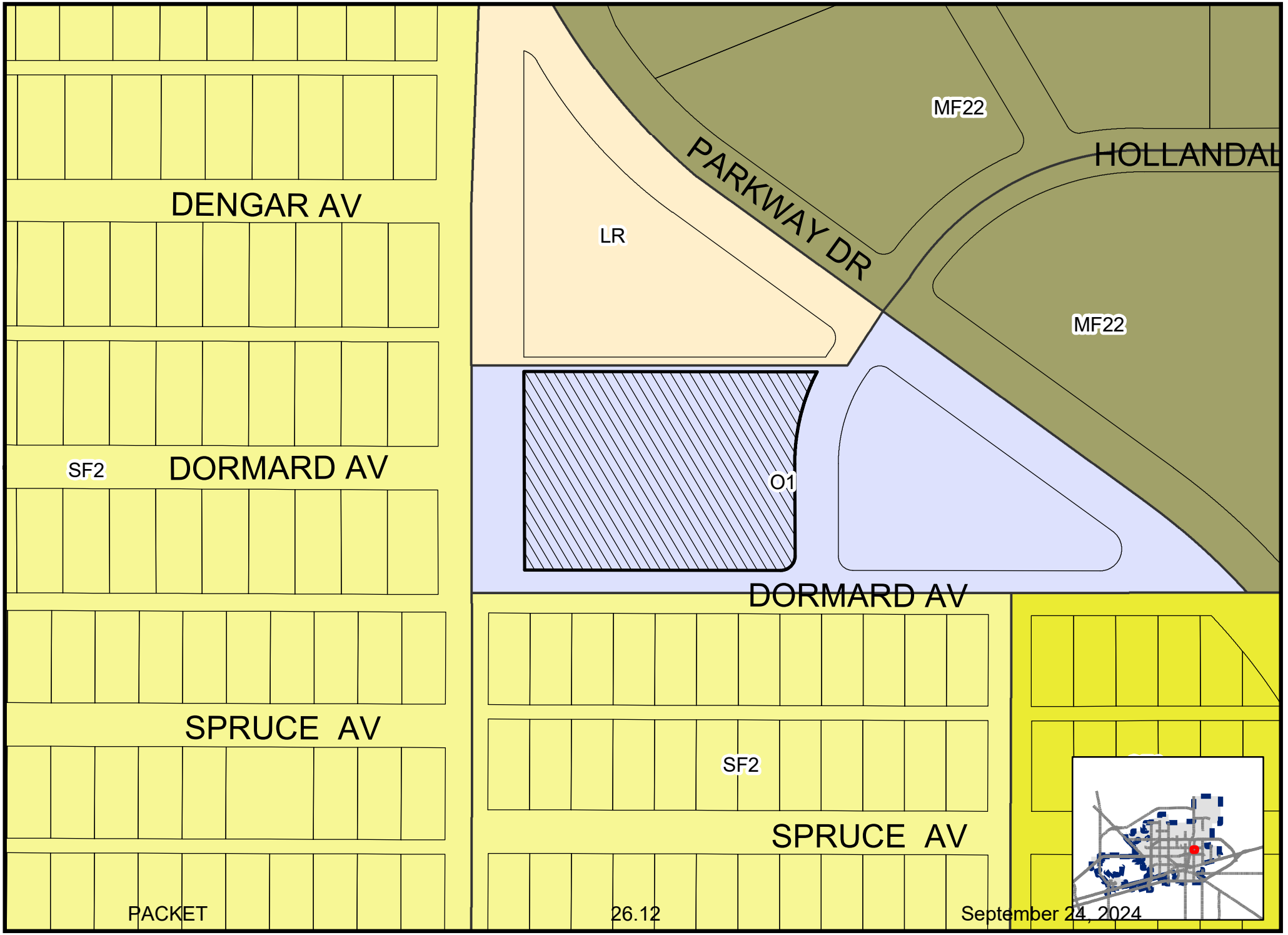

Map DH, 9/11/2024

E-24-0128

Scale: 1" = 166'

ZONING MAP

© THE CITY OF MIDLAND - 2021: THIS DATA IS NOT A SUBSTITUTION FOR A SURVEY PRODUCT, NOR IS IT DESIGNED TO BE USED AS A PRIMARY TOOL IN PERMITTING OR OTHER DECISIONS BASED SOLELY ON THE INFORMATION CONTAINED HEREIN. THE CITY OF MIDLAND SHALL NOT BE RESPONSIBLE FOR ANY DECISIONS BASED UPON THE USE OF THIS DATA.


WAY DR
2
1
DORMARD AV
D AV
AV


2903


MIDLAND
Be the Energy!
YUCCA BLOSSOM MONTESSORI
ITEM #
Special Exception
SEPTEMBER 24, 2024
Visit Our Website
MIDLANDTEXAS.GOV

Application Summary

- **Property Owner:** Yucca Blossom Montessori
- **Applicant:** Natalie London, on behalf of Yucca Blossom Montessori
- Special Exception
- **Address:** The principal building at 2908 North Lamesa Road and the proposed parking lot at 1100 East Dormard Avenue
- **Reason for Request:** Increased separation distance between a proposed parking lot and principal building

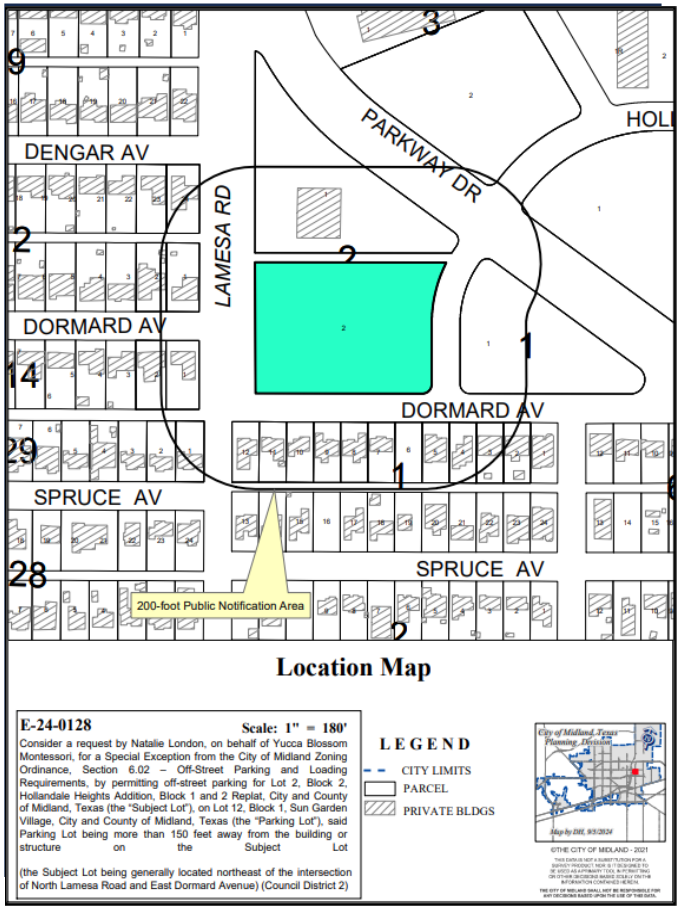

Zoning

- **Current Zoning:** O-1, Office District
- **Surrounding Zoning:**
  - North: LR, Local Retail District
  - South and West: SF-2, Single-Family Dwelling District
  - East: O-1, Office District

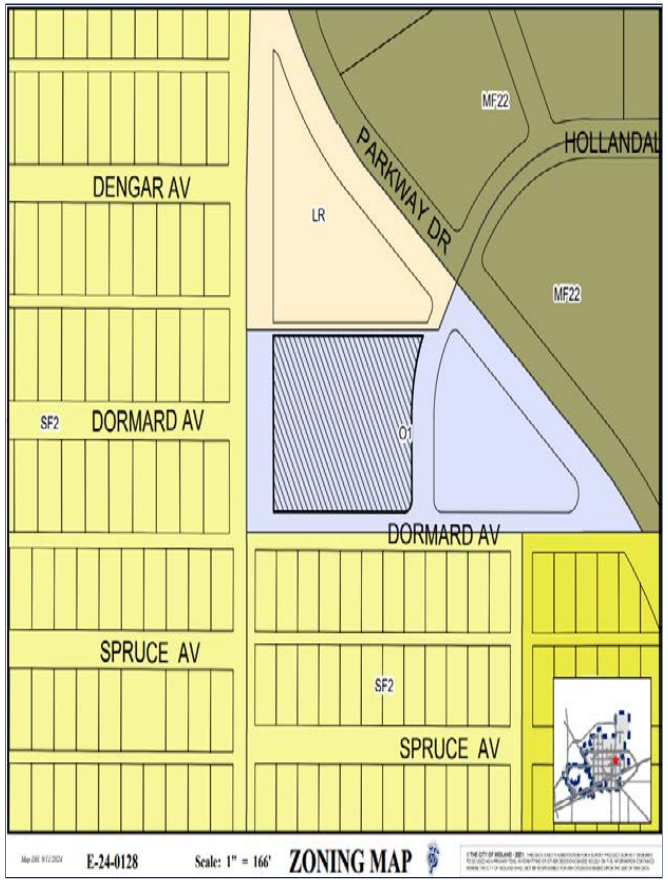

Land Use

- **Current Use of the Property:** Private School
- **Proposed Use of the Property:** Private School
- **Surrounding Uses:**
  - North: Retail Stores and Shops
  - South: Single-Family Dwelling (detached)
  - East: Vacant Lot
  - West: Single-Family Dwelling (detached)

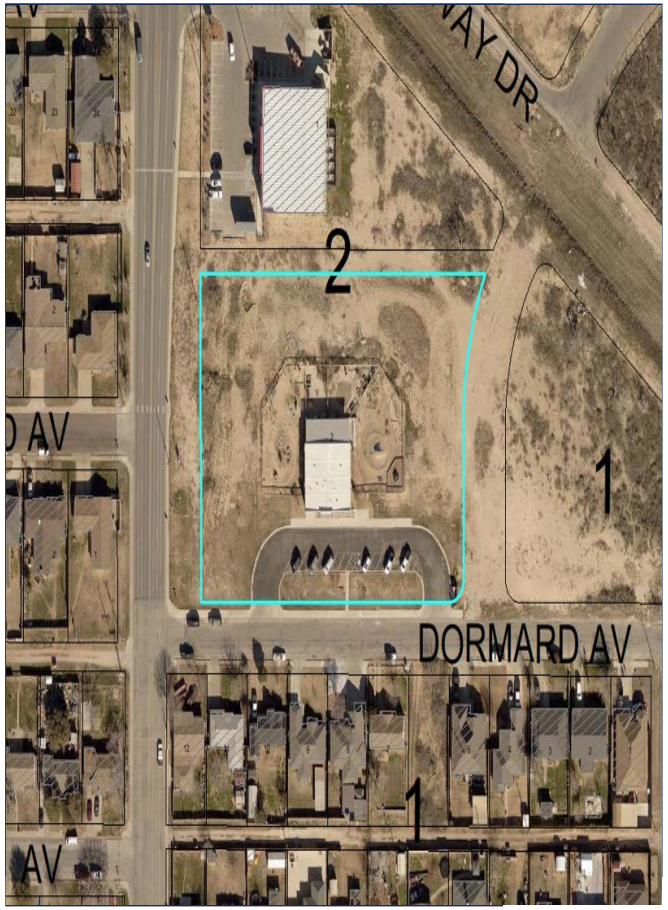

Special Exception Details

- **Requirement:** 150 feet per Section 11-1-6.02(A)2
- **Requested Variance:** 195 feet
- No Hardship

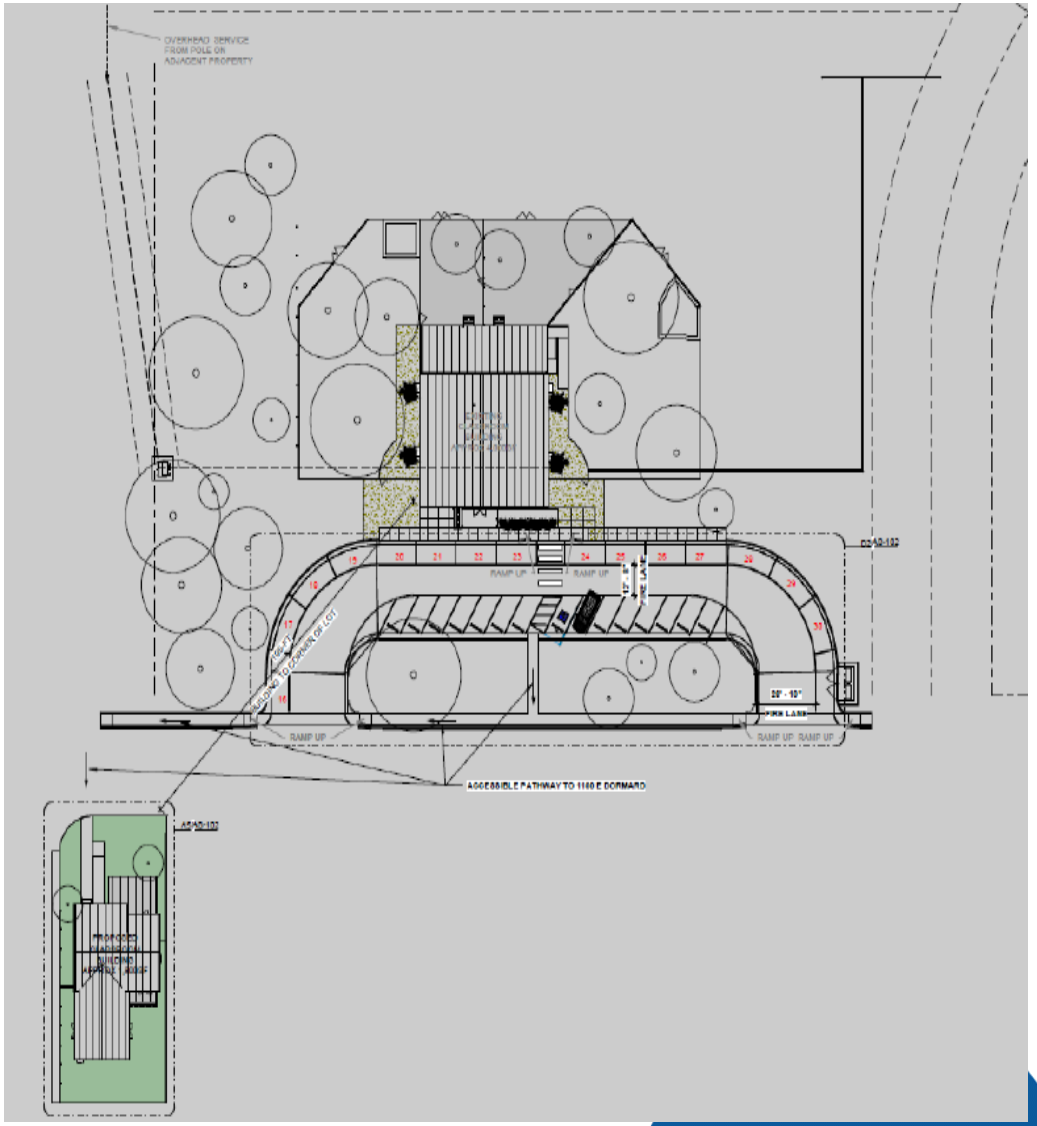



On Dormard Avenue, Looking North

Staff's Recommendation

- No objections received.
- Staff recommends NO ACTION of this special exception. However, if approved, staff recommends that it be subject to the below condition.
- Conditions:
    A. The Excepted Parking shall be limited to Lot 12, Block 1, Sun Garden Village Addition, City and County of Midland, Texas (the "Parking Lot"). For the avoidance of doubt, off-street parking more than 150 feet away from the building or structure on the Subject Lot shall be prohibited except on the Parking Lot.

MISSION

Deliver exceptional services and promote a high quality of life and place for ALL our citizens.



City Council Meeting

Item Number: 27

Meeting Date: September 24, 2024

To: City Council / City Manager

From: Landon Ochoa, Planning Division Manager

Subject: AN ORDINANCE EXTENDING THE BOUNDARIES OF THE CITY OF MIDLAND, TEXAS, BY ADDING THERETO A CERTAIN AREA ADJOINING THE PRESENT CITY LIMITS, BEING A 22.119-ACRE TRACT OF LAND OUT OF SECTION 35, BLOCK 40, T-1-S, T&P RR CO. SURVEY, MIDLAND COUNTY, TEXAS (GENERALLY LOCATED ON THE NORTH SIDE OF STATE HIGHWAY 191, APPROXIMATELY 1,550 FEET WEST OF STATE HIGHWAY 158); ORDERING PUBLICATION; AND ORDERING RECORDATION BY THE CITY SECRETARY (DISTRICT: NONE) (DEVELOPMENT SERVICES) (QUALITY OF LIFE AND PLACE)

Purpose:

Winkleman & Associates, Inc. on behalf of Costco Wholesale, is requesting an annexation of a property located on the north side of State Highway 191 for the development of a retail store known as Costco Wholesale.

Recommended City Council Action:

Approve

Fiscal Impact:

No City funds are required to process this request.

Strategic Priority:

Quality of Life and Place

Discussion:

The property is currently in the process of being annexed into city limits. An annexation of the property will need to be approved first before the initial zoning can be approved. The property will also need to be platted. A preliminary plat has been submitted as of September 13, 2024 and is under review.

The Tall City Tomorrow Comprehensive Plan designates this area as Urban -High which calls for a mix of complementary uses, including multi-family residential, large offices, medical buildings, regional commercial, limited industrial, institutional uses such as churches, schools, or hospitals, and other regional attractors.

The initial zoning request is scheduled for the September 24, 2024 City Council meeting. The Planning and Zoning Commission recommended approval of the initial zoning request on September 3, 2024.

This project has been circulated to all respective departments for internal review and received no objections.

Engineering: (Approved)

No objection.

Transportation: (Approved)

No objections.

Fire: (Approved)

No comments or objections.

Building Code: (Approved)

No objections.

Oil and Gas: (Approved)

No Oil & Gas well concerns. Informational: No Oil or Gas wells identified with 500 ft. radius for city permitted well or a 135 ft. radius for non-permitted wells on plat. Please note if oil & gas wells are not identified or left off plat, this could prevent receiving city permits for structures. Any plugged and abandoned (P&A) well would need to be identified with comments- No structure shall be built over an abandoned well.

GIS: (Approved)

Provide two sets of x-y coordinates.

Planning: (Approved)

No Planning issues.

Letters of Objection:

As of September 18, 2024, staff has received no letters of objection to this request.

Attachments:

Application
Maps
PowerPoint Presentation

City Manager's Office

ORDINANCE NO. _____

AN ORDINANCE EXTENDING THE BOUNDARIES OF THE CITY OF MIDLAND, TEXAS, BY ADDING THERETO A CERTAIN AREA ADJOINING THE PRESENT CITY LIMITS, BEING A 22.119-ACRE TRACT OF LAND OUT OF SECTION 35, BLOCK 40, T-1-S, T&P RR CO. SURVEY, MIDLAND COUNTY, TEXAS (GENERALLY LOCATED ON THE NORTH SIDE OF STATE HIGHWAY 191, APPROXIMATELY 1,550 FEET WEST OF STATE HIGHWAY 158); ORDERING PUBLICATION; AND ORDERING RECORDATION BY THE CITY SECRETARY

WHEREAS, a public hearing before the City Council of the City of Midland, Texas, a home rule municipal corporation, was held in the City Council Chamber on September 24, 2024, during which all interested persons were provided an opportunity to be heard on the proposed annexation of the hereinafter described territory; and

WHEREAS, notice of the public hearing was published on the City of Midland, Texas' Internet website on September 6, 2024, and the notice remained posted until the date of the public hearing; and

WHEREAS, notice of the public hearing was published in a newspaper having general circulation in the City of Midland, Texas, and in the below described territory, on September 6, 2024; and

WHEREAS, all required notices of the proposed annexation and the public hearing were given in accordance with applicable laws; and

WHEREAS, the City of Midland has entered into a written agreement with the owner(s) of the hereinafter described territory for the provision of services in said area;

NOW, THEREFORE, BE IT ORDAINED BY THE CITY COUNCIL OF THE CITY OF MIDLAND, TEXAS:

SECTION ONE. That the following described property adjoining the present boundary limits of the City of Midland, Texas, be and the same is hereby annexed to and incorporated within the boundary of the City of Midland, Texas:

Being a 22.119-acre tract of land out of Section 35, Block 40, T-1-S, T&P RR

Co. Survey, Midland County, Texas, and being more fully described by metes

and bounds in the petition for annexation attached hereto as Exhibit "A" and

incorporated herein by reference for all legal purposes.

SECTION TWO. That this ordinance shall be published in the official newspaper

in the City of Midland, Texas, and the same shall not be effective until after the publication

thereof.

SECTION THREE. That the City Secretary is hereby authorized and directed to file

a certified copy of this ordinance with the County Clerk of Midland County, Texas, for the

purpose of recording in the Deed Records of Midland County, Texas.

The above and foregoing ordinance was duly proposed, read in full and adopted on

first reading, the _____ day of _____, A.D., 2024; and passed to second reading

on motion by Council member _____, seconded by Council member

following vote upon motion of Council member _____, seconded by Council _____, by the following vote:

Council members voting "AYE":

Council members voting "NAY":

The above and foregoing ordinance was read in full and finally adopted by the

Council members voting "AYE":

member _____, on the _____ day of _____, A.D., 2024, at a regular meeting of the City Council:

Council members voting "NAY":

PASSED AND APPROVED THIS _____ day of _____, A.D., 2024.

_____

Lori Merritt Blong, Mayor

ATTEST:

_____

Marcia Bentley-German, City Secretary

APPROVED AS TO CONTENT

AND COMPLETENESS:

_____

Elizabeth Triggs, Planning and Development Officer

APPROVED ONLY AS TO FORM:

_____

John Ohnemiller, City Attorney

EXHIBIT "A"

PETITION FOR ANNEXATION

Dear City of Midland:

As current owner of the tract(s) of land described in Exhibit(s) A (the "Property"), said Exhibit(s) being attached hereto and incorporated herein, CUMBERLAND AND WESTERN RESOURCES, LLC ("Owner") submits this petition for annexation and hereby requests that the Property be added to and annexed to the City of Midland.

Signature of Owner or Owner's Authorized Representative

GREG BETTERTON

Printed Name

MANAGER

Title

THE STATE OF FLORIDA §
§
COUNTY OF SARASOTA §

This instrument was acknowledged before me on the 5 day of SEPTEMBER 20 24, by GREG A. BETTERTON in the capacity herein stated.

PERSONALLY KNOWN TO ME

MY COMMISSION EXPIRES

Notary Public, State of FLORIDA

NOTARY PUBLIC STATE OF FLORIDA
ELISE J. DURANCEAU
Commission # HH 082709
Expires March 8, 2025
Bonded Thru Budget Notary Services

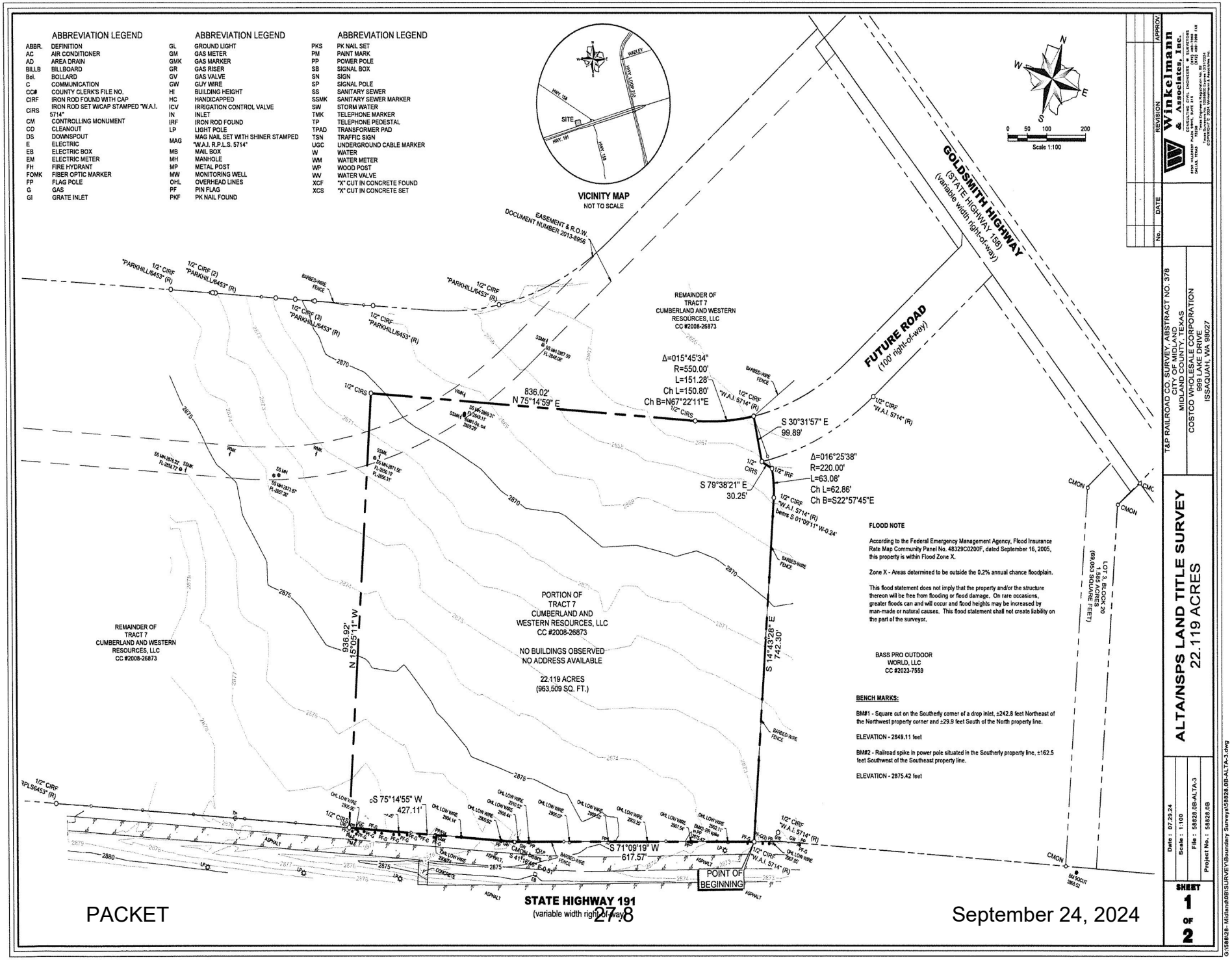
ABBREVIATION LEGEND
ABBR. DEFINITION
AC AIR CONDITIONER
AD AREA DRAIN
BILLB BILLBOARD
Bol. BOLLARD
C COMMUNICATION
CC# COUNTY CLERK'S FILE NO.
CIRF IRON ROD FOUND WITH CAP
CIRS IRON ROD SET W/CAP STAMPED "W.A.I. 5714"
CM CONTROLLING MONUMENT
CO CLEANOUT
DS DOWNSPOUT
E ELECTRIC
EB ELECTRIC BOX
EM ELECTRIC METER
FH FIRE HYDRANT
FOMK FIBER OPTIC MARKER
FP FLAG POLE
G GAS
GI GRATE INLET
GL GROUND LIGHT
GM GAS METER
GMK GAS MARKER
GR GAS RISER
GV GAS VALVE
GW GUY WIRE
HI BUILDING HEIGHT
HC HANDICAPPED
ICV IRRIGATION CONTROL VALVE
IN INLET
IRF IRON ROD FOUND
LP LIGHT POLE
MAG MAG NAIL SET WITH SHINER STAMPED "W.A.I. R.P.L.S. 5714"
MB MAIL BOX
MH MANHOLE
MP METAL POST
MW MONITORING WELL
OHL OVERHEAD LINES
PF PIN FLAG
PKF PK NAIL FOUND
PKS PK NAIL SET
PM PAINT MARK
PP POWER POLE
SB SIGNAL BOX
SN SIGN
SP SIGNAL POLE
SS SANITARY SEWER
SSMK SANITARY SEWER MARKER
SW STORM WATER
TMK TELEPHONE MARKER
TP TELEPHONE PEDESTAL
TPAD TRANSFORMER PAD
TSN TRAFFIC SIGN
UGC UNDERGROUND CABLE MARKER
W WATER
WM WATER METER
WP WOOD POST
WV WATER VALVE
XCF "X" CUT IN CONCRETE FOUND
XCS "X" CUT IN CONCRETE SET
VICINITY MAP
NOT TO SCALE
SITE
HWY. 158
HWY. 191
HWY. LOOP 250
Scale 1:100
GOLDSMITH HIGHWAY
(STATE HIGHWAY 158)
(variable width right-of-way)
FUTURE ROAD
(100' right-of-way)
EASEMENT & R.O.W.
DOCUMENT NUMBER 2013-8956
REMAINDER OF TRACT 7
CUMBERLAND AND WESTERN RESOURCES, LLC
CC #2008-26873
Δ=015°45'34"
R=550.00'
L=151.28'
Ch L=150.80'
Ch B=N67°22'11"E
836.02'
N 75°14'59" E
S 30°31'57" E
99.89'
Δ=016°25'38"
R=220.00'
L=63.08'
Ch L=62.86'
Ch B=S22°57'45"E
S 79°38'21" E
30.25'
936.92'
N 15°05'11" W
S 14°43'28" E
742.30'
S 75°14'55" W
427.11'
S 71°09'19" W
617.57'
PORTION OF TRACT 7
CUMBERLAND AND WESTERN RESOURCES, LLC
CC #2008-26873
NO BUILDINGS OBSERVED
NO ADDRESS AVAILABLE
22.119 ACRES
(963,509 SQ. FT.)
REMAINDER OF TRACT 7
CUMBERLAND AND WESTERN RESOURCES, LLC
CC #2008-26873
BASS PRO OUTDOOR WORLD, LLC
CC #2023-7559
LOT 3, BLOCK 20
1.565 ACRES
(68,053 SQUARE FEET)
POINT OF BEGINNING
STATE HIGHWAY 191
(variable width right-of-way)
FLOOD NOTE
According to the Federal Emergency Management Agency, Flood Insurance Rate Map Community Panel No. 48329C0200F, dated September 16, 2005, this property is within Flood Zone X.
Zone X - Areas determined to be outside the 0.2% annual chance floodplain.
This flood statement does not imply that the property and/or the structure thereon will be free from flooding or flood damage. On rare occasions, greater floods can and will occur and flood heights may be increased by man-made or natural causes. This flood statement shall not create liability on the part of the surveyor.
BENCH MARKS:
BM#1 - Square cut on the Southerly corner of a drop inlet, ±242.8 feet Northeast of the Northwest property corner and ±29.9 feet South of the North property line.
ELEVATION - 2849.11 feet
BM#2 - Railroad spike in power pole situated in the Southerly property line, ±162.5 feet Southwest of the Southeast property line.
ELEVATION - 2875.42 feet
Winkelmann & Associates, Inc.
CONSULTING CIVIL ENGINEERS • SURVEYORS
8350 NIEMAN ROAD, SUITE 150, LENEXA, KANSAS 66214 (913) 495-7999 FAX
DALLAS, TEXAS 75240 (972) 490-7999 FAX
Texas Surveyor No. 100800 | Expires 12/31/2024
Texas Engineer No. F-2312 | Expires 06/30/2025
T&P RAILROAD CO. SURVEY, ABSTRACT NO. 378
CITY OF MIDLAND
MIDLAND COUNTY, TEXAS
COSTCO WHOLESALE CORPORATION
999 LAKE DRIVE
ISSAQUAH, WA 98027
ALTA/NSPS LAND TITLE SURVEY
22.119 ACRES
Date : 07.29.24
Scale : 1:100
File : 58828.0B-ALTA-3
Project No. : 58828.0B
SHEET 1 OF 2
G:\58828\- Midland\0B\SURVEY\Boundary Survey\58828.0B-ALTA-3.dwg

PROPERTY DESCRIPTION

STATE OF TEXAS §
COUNTY OF MIDLAND §

BEING a tract of land situated in the T&P RAILROAD CO. SURVEY, ABSTRACT NO. 378, City of Midland, Midland County, Texas and being a portion of a tract of land (Tract 7) as described in deed to Cumberland and Western Resources, LLC, recorded in County Clerk's File No. 2008-26873, Deed Records, Midland County, Texas, and being more particularly described as follows:

BEGINNING at a 1/2-inch iron rod with red plastic cap stamped "W.A.I. 5714" found for corner at the Southwesterly corner of a tract of land as described in deed to Bass Pro Outdoor World, LLC, recorded in County Clerk's File No. 2023-7559, Deed Records, Midland County, Texas, said iron rod being situated in the Northerly right-of-way line of State Highway 191 (variable width right-of-way);

THENCE South 71 deg 09 min 19 sec West, departing the Westerly line of said Bass Pro Outdoor World, LLC tract and along said Northerly right-of-way line, a distance of 617.57 feet to a point for corner from which a concrete monument found bears South 41 deg 16 min 46 sec East, a distance of 0.51 feet;

THENCE South 75 deg 14 min 55 sec West, continuing along said Northerly right-of-way line, a distance of 427.11 feet to a 1/2-inch iron rod with red plastic cap stamped "W.A.I. 5714" set for corner;

THENCE departing the Northerly right-of-way line of said State Highway 191 and over and across said Cumberland and Western Resources, LLC tract, the following:

North 15 deg 05 min 11 sec West, a distance of 936.92 feet to a 1/2-inch iron rod with red plastic cap stamped "W.A.I. 5714" set for corner;

North 75 deg 14 min 59 sec East, a distance of 836.02 feet to a 1/2-inch iron rod with red plastic cap stamped "W.A.I. 5714" set for corner and the beginning of a curve to the left having a radius of 550.00 feet, a central angle of 15 deg 45 min 34 sec, a chord bearing of North 67 deg 22 min 11 sec East and a chord length of 150.80 feet;

Along said curve to the left, an arc distance of 151.28 feet to a 1/2-inch iron rod with red plastic cap stamped "W.A.I. 5714" set for corner, said iron rod being at the terminus of a Future Road (100' right-of-way) and the most Northerly Northwest corner of said Bass Pro Outdoor World, LLC tract;

THENCE South 30 deg 31 min 57 sec East, along said terminus and the Westerly line of said Bass Pro Outdoor World, LLC tract, a distance of 99.89 feet to a 1/2-inch iron rod with red plastic cap stamped "W.A.I. 5714" set for corner;

THENCE South 79 deg 38 min 21 sec East, departing the terminus of said Future Road and continuing along said Westerly line, a distance of 30.25 feet to a 1/2-inch iron rod found for corner and the beginning of a non-tangent curve to the right having a radius of 220.00 feet, a central angle of 16 deg 25 min 38 sec, a chord bearing of South 22 deg 57 min 45 sec East and a chord length of 62.86 feet;

THENCE continuing along said Westerly line and along said non-tangent curve to the right, an arc distance of 63.08 feet to a point for corner from which a 1/2-inch iron rod with red plastic cap stamped "W.A.I. 5714" found bears South 01 deg 09 min 11 sec West, a distance of 0.24 feet;

THENCE South 14 deg 43 min 28 sec East, continuing along said Westerly line, a distance of 742.30 feet to the POINT OF BEGINNING.

CONTAINING within these metes and bounds 22.119 acres or 963,509 square feet of land, more or less.

Bearings shown hereon are based upon an on-the-ground Survey performed in the field on the 26th day of July, 2024, utilizing a G.P.S. bearing related to the Texas Coordinate System, Central Zone (4203), NAD 83, grid values from the GeoShack VRS network.

SCHEDULE "B" NOTES

Items corresponding to the Commitment for Title Insurance issued August 13, 2024 by First American Title Insurance Company bearing an effective date of July 26, 2024, GF# NCS-1227609-WA1.

1-10d. Intentionally omitted by Surveyor.

10e. All terms, conditions and provisions of that certain Right-of Way easement from Scharbauer Brothers & Co., a corporation to Colorado River Municipal Water District, dated January 06, 1959, recorded in Volume 308, Page 502, Official Public Records, Midland County, Texas. (Does not affect the subject property)

10f. All terms, conditions and provisions of that certain Right-of Way easement from Scharbauer Brothers & Co., a corporation to the State of Texas, dated September 16, 1959, recorded in Volume 334, Page 42, Official Public Records, Midland County, Texas. (Does not affect the subject property)

10g. All terms, conditions and provisions of that certain Right-of Way easement from Scharbauer Brothers & Co., a corporation to Texas Electric Service Company, dated April 13, 1960, recorded in Volume 337, Page 349, Official Public Records, Midland County, Texas. (Does not affect the subject property)

10h. All terms, conditions and provisions of that certain Right-of Way easement from Scharbauer Brothers & Co., a corporation to Texas Electric Service Company, dated September 21, 1961, recorded in Volume 372, Page 85, Official Public Records, Midland County, Texas. (Does not affect the subject property)

10i. All terms, conditions and provisions of that certain Right-of Way easement from Scharbauer Brothers & Co., a corporation to Pioneer Natural Gas Company, a Texas corporation, dated February 22, 1974, recorded in Volume 577, Page 693, Official Public Records, Midland County, Texas, (Affects the subject property, blanket)

10j-10l. Intentionally omitted by Surveyor.

10m. All terms, conditions and provisions of that certain Pipeline Easement Right-of Way from Spanish Trail Land & Cattle Co., LP to GRB Properties, Inc., General Partner for Stagg Investment I, Ltd., dated December 12, 2007, recorded in Volume 3083, Page 594, Official Public Records, Midland County, Texas. (Unable to plot, "Exhibit A", not included in the document)

10n. Intentionally omitted by Surveyor.

10o. Texas Local Government Code Development Agreement, recorded under County Clerk's File No. 2009-20614, Official Public Records, Midland County, Texas. (According to Section 5 of the provided document, the agreement appears to be expired)

10p. Intentionally omitted by Surveyor.

10q. All terms, conditions and provisions of that certain Water Pipeline Easement and Right-of Way easement from Cumberland & Western Resources, LLC, a Wyoming limited liability company to Midland County Fresh Water Supply District No. 1, dated August 22, 2012, recorded under County Clerk's File No. 2012-19430, Official Public Records, Midland County, Texas. (Does not affect the subject property)

10r. All terms, conditions and provisions of that certain Right-of Way easement from Cumberland & Western Resources, LLC, a Wyoming limited liability company to Midland County Fresh Water Supply District No. 1, dated April 23, 2013, recorded under County Clerk's File No. 2013-9942, Official Public Records, Midland County, Texas. (Does not affect the subject property)

10s. All terms, conditions and provisions of that certain Temporary Drainage Easement from Cumberland & Western Resources, LLC, a Wyoming limited liability company to City of Midland, dated June 05, 2013, recorded under County Clerk's File No. 2013-14110, Official Public Records, Midland County, Texas. (Unable to plot, "Exhibit A", not included in the document)

10t. All terms, conditions and provisions of that certain Water Pipeline and Right-of Way Easement from Cumberland & Western Resources, LLC, a Wyoming limited liability company to Midland County Fresh Water Supply District No. 1, dated June 13, 2012, recorded under County Clerk's File No. 2013-25259, Official Public Records, Midland County, Texas. (Does not affect the subject property)

10u. All terms, conditions and provisions of that certain Right-of Way Easement from Cumberland & Western Resources, LLC, a Wyoming limited liability company to Diamondback O&G LLC, dated October 15, 2015, recorded under County Clerk's File No. 2016-1532, Official Public Records, Midland County, Texas. (Does not affect the subject property)

10v. All terms, conditions and provisions of that certain Right-of Way Easement from Cumberland & Western Resources, LLC, a Wyoming limited liability company to Midland County Fresh Water Supply District No. 1, dated March 17, 2016, recorded under County Clerk's File No. 2016-23356, Official Public Records, Midland County, Texas. (Does not affect the subject property)

10w. All terms, conditions and provisions of that certain Right-of-Way Easement from Cumberland & Western Resources, LLC, a Wyoming limited liability company to Midland County Fresh Water Supply District No. 1, dated March 17, 2016, recorded under County Clerk's File No. 2016-23357, Official Public Records, Midland County, Texas. (Does not affect the subject property)

10x. All terms, conditions and provisions of that certain Right-of Way Easement from Cumberland & Western Resources, LLC, a Wyoming limited liability company to Diamondback E&P LLC, dated July 14, 2016, recorded under County Clerk's File No. 2016-30328, Official Public Records, Midland County, Texas. (Terms, conditions and provisions affect subject property, blanket; Unable to plot well locations, "Exhibit A", not included in the document)

10y. Service Agreement recorded under Clerk's File No. 2019-38533, Official Public Records, Midland County, Texas. (Does not affect the subject property). Certification recorded under Clerk's File No. 2020-7177, Official Public Records, Midland County, Texas. (Does not affect the subject property). Service Agreement recorded under Clerk's File No. 2020-9194, Official Public Records, Midland County, Texas. (Does not affect the subject property). Service Agreement recorded under Clerk's File No. 2021-18279, Official Public Records, Midland County, Texas. (Does not affect the subject property). Waiver of Surface Rights recorded under Clerk's File No. 2021-35457, Official Public Records, Midland County, Texas. (Does not affect the subject property)

10z. All terms, conditions and provisions of that certain Permanent Easement from Cumberland & Western Resources, LLC, a Wyoming limited liability company to Oncor Electric Delivery Company, LLC, a Delaware limited liability company, dated May 28, 2020, recorded under County Clerk's File No. 2020-21638, Official Public Records, Midland County, Texas. (Does not affect the subject property)

The Surveyor has not abstracted the record title and/or easements of the subject property. The Surveyor prepared this survey with the benefit of a title commitment described above and assumes no liability for any easements, right-of-way dedications or other title matters affecting the subject property which may have been filed in the real property records but are not disclosed in said title commitment.

SURVEYOR'S CERTIFICATION

This is to certify that this map or plat and the survey on which it is based were made in accordance with the 2021 Minimum Standard Detail Requirements for ALTA/NSPS Land Title Surveys, jointly established and adopted by ALTA and NSPS, and includes Items 1, 2, 3, 4, 7(a), 7(b)(1), 7(c), 8, 9, 13 and 14 of Table A thereof. The fieldwork was completed on 07/26/2024.

9/4/24

Leonard J. Lueker (*Original signature in red ink*)
Registered Professional Land Surveyor
Texas Registration No. 5714
l.lueker@winkelmann.com

Winkelmann & Associates, Inc.
6750 Hillcrest Plaza Drive, Suite 215
Dallas, Texas 75230
(972) 490-7090 www.winkelmann.com

STATE OF TEXAS
REGISTERED
LEONARD JAY LUEKER
5714
PROFESSIONAL
LAND SURVEYOR

Please note that the use of the word "certify" or "certification" in this document is an expression of professional opinion regarding those facts or findings which are the subject of the certification and does not constitute a warranty or guarantee, either expressed or implied.

No.	DATE	REVISION	APPROV

Winkelmann & Associates, Inc.
LAND SURVEYING CIVIL ENGINEERS SURVEYORS
6750 HILLCREST PLAZA DRIVE, SUITE 215
DALLAS, TEXAS 75230
(972) 490-7090 FAX
Texas Surveyor Firm 100660 Expires 12/31/2024
Texas Engineer Registration No. 20 (972) 490-7090 FAX
Texas Surveyor Firm 100660 Expires 12/31/2024
www.winkelmann.com

T&P RAILROAD CO. SURVEY, ABSTRACT NO. 378
CITY OF MIDLAND
MIDLAND COUNTY, TEXAS
COSTCO WHOLESALE CORPORATION
999 LAKE DRIVE
ISSAQUAH, WA 98027

ALTA/NSPS LAND TITLE SURVEY
22.119 ACRES

Date : 07.29.24
Scale : N/A
File : 58828.05-ALTA-3
Project No. : 58828.0B

SHEET 2 OF 2

G:\58828- Midland\0B\SURVEY\Boundary Survey\58828.0B-ALTA-3.dwg

MIDLAND
Planning Division

Annexation/Initial Zoning Application

Project Number: _____

Case Number: _____

Applicant *(if acting as Agent, see affidavit on page 2)* Printed Name: MICHAEL CLARK WINKELMANN & ASSOC		Phone (214) 801 7216 Email mclarke@winkelmann.com	
Address 6150 HILLCREST PLAZA #200	City DALLAS	State TX	Zip 75230

Property Owner CUMBERLAND & WESTERN RESOURCES, LLC Printed Name: C/O BETTERTON TYER & SUMMONTE, PL		Phone (941) 484-2442 Email greg@bettertonlaw.com	
Address 735 E. VENICE AVE #200	City VENICE	State FL	Zip 34285

Representative *(if different from Applicant or Property Owner)* Firm: COSTCO WHOLESALE Printed Name: JP ANDREWS		Phone (571) 228 7024 Email JPANDREWS@COSTCO.COM	
Address 45140 HORSESHOE DRIVE #150	City STERLING	State VA	Zip 20166

Street Address: SH 191 WEST OF HWY 158

Legal Description
Lot: Block: Subdivision:

Current Zoning: N/A	**Proposed Zone:** RR *(List by tracts if more than one district is requested)*

Reason for Annexation/Zone Change Request: ALLOW FOR DEVELOPMENT OF COSTCO WAREHOUSE & FUEL CENTER

Present Use of Property: VACANT

Proposed Use of Property: RETAIL (COSTCO)

How would this annexation/zone change affect the public health, safety and welfare?
NO ADVERSE IMPACT TO PUBLIC HEALTH, SAFETY, WELFARE

Describe how this annexation/zone change will affect adjacent properties:
THIS ANNEXATION & ZONING IS AN EXTENSION OF CURRENT ZONING & LAND USE ALONG SH 191

Submittal and Fees
Items to be submitted with this application form:
- *Application Fee – Payable to the 'City of Midland'*
- Dimensioned Site Plan
- Digital Copies of Site Plan (PDF/JPEG)

Signature *(by property owner only – authorized agent must sign affidavit below)*	
Applicant (signature):	Date: 8/6/24
Applicant (printed): MICHAEL CLARK	
Property Owner (signature): X Greg Betterton	Date: 8/6/24
Property Owner (printed): X Greg Betterton Manager	

The Annexation/Initial Zoning shall be considered officially received in the Planning office only when it has been submitted in full compliance with the provisions of Section 212 of the Texas Local Government Code and the Zoning Code of Ordinances of the City of Midland and when such required items for the application are also received.

All materials, including exhibits, submitted in support of an application, or displayed during a public hearing, shall remain the property of the City of Midland.

If an agent is authorized by the property owner to file and execute the application on behalf of the property owner, the agent must complete the affidavit below.

STATE OF TEXAS
COUNTY OF MIDLAND

Before me, the undersigned authority, on this day personally appeared Michael Clark who, being by me duly sworn, upon oath says: That (s)he is authorized by Greg Betterton, the owner of the above described property, to fully represent him/her in this application and that (s)he had the legal right, power and authority to sign said owner's name hereto as his/her attorney in fact.

Authorized Agent (*signature*)

Subscribed and sworn to before me, this 26 day of Aug, 2024, to certify which witness my hand and seal of office.

Chris Fountain

NOTARY PUBLIC, MIDLAND COUNTY, TEXAS

CHRIS FOUNTAIN
Notary Public
STATE OF TEXAS
ID# 4451970
My Comm. Exp. Nov. 22, 2024

FOR OFFICE USE ONLY	
☐ Property Owner Authorization	☐ Metes and Bounds (Sealed by Surveyor)
☐ Application Fee	☐ Files In Digital Format (PDF/JPEG)
Check #_____	☐ Petition
Received By:	Date:

****Application will not be considered for scheduling until reviewed by a planner.****

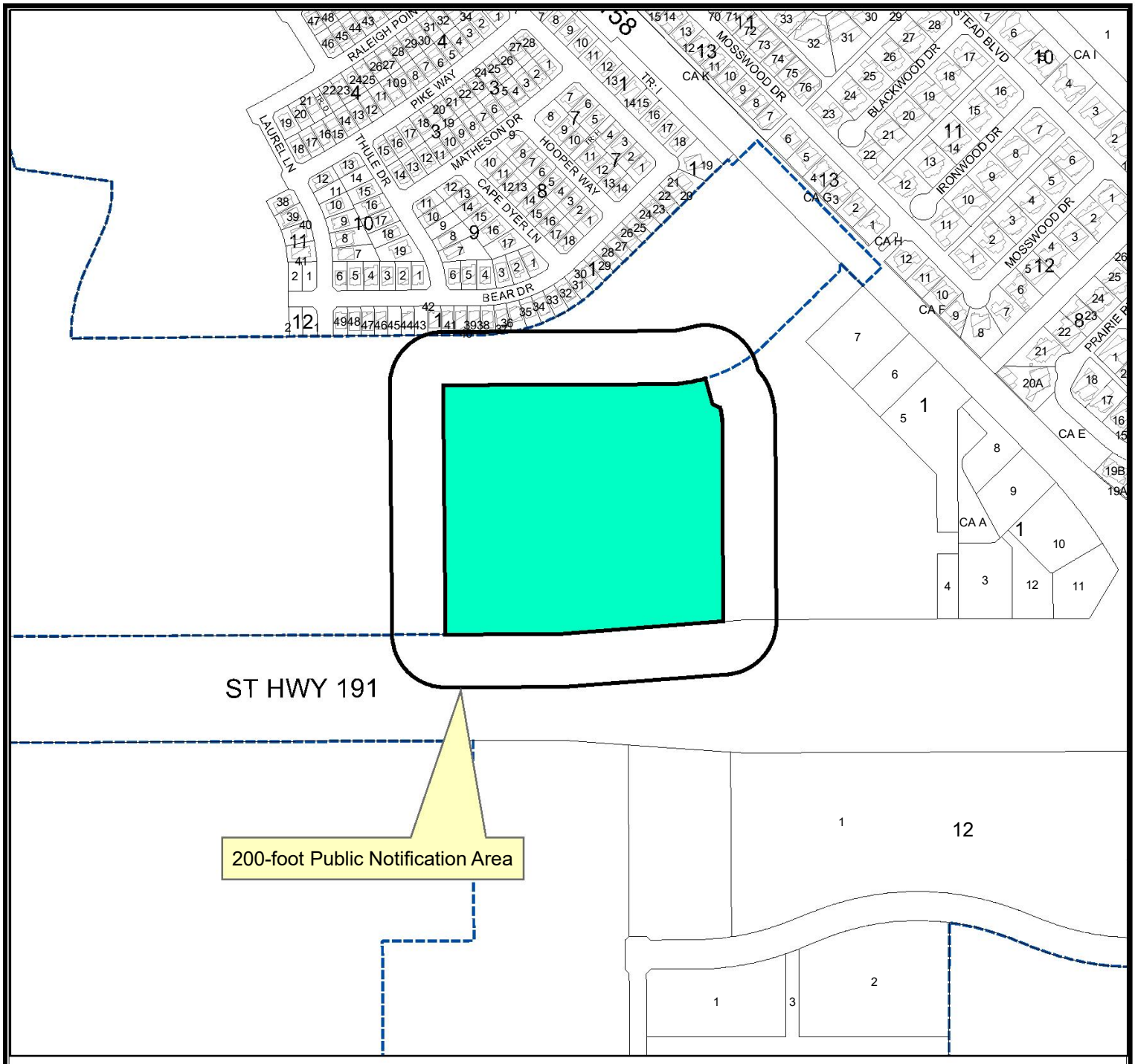

Location Map

A-24-0048 **Scale: 1" = 537'**

An ordinance on a request by Winkleman & Associates, Inc., on behalf of Costco Wholesale, for an annexation of a 22.119-acre tract of land out of the south part of Section 35, Block 40, T-1-S, T&P RR. Co Survey, Midland County, Texas.

Generally located on the north side of State Highway 191, approximately 1,550 feet west of West State Highway 158. (ETJ)

LEGEND

- CITY LIMITS
- PARCEL
- PRIVATE BLDGS

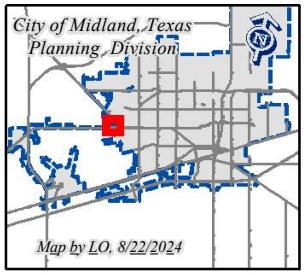

©THE CITY OF MIDLAND - 2021
THIS DATA IS NOT A SUBSTITUTION FOR A SURVEY AND IS NOT DESIGNED TO BE USED AS THE PRIMARY TOOL IN PERMITTING OR OTHER DECISIONS BASED SOLELY ON THE INFORMATION CONTAINED HEREIN.
THE CITY OF MIDLAND SHALL NOT BE RESPONSIBLE FOR ANY DECISIONS BASED UPON THE USE OF THIS DATA.

PETITION FOR ANNEXATION

Dear City of Midland:

As current owner of the tract(s) of land described in Exhibit(s) A (the "Property"), said Exhibit(s) being attached hereto and incorporated herein, CUMBERLAND AND WESTERN RESOURCES, LLC ("Owner") submits this petition for annexation and hereby requests that the Property be added to and annexed to the City of Midland.

Signature of Owner or Owner's Authorized Representative

GREG BETTERTON

Printed Name

MANAGER

Title

THE STATE OF FLORIDA §
§
COUNTY OF SARASOTA §

This instrument was acknowledged before me on the 5 day of SEPTEMBER 20 24, by GREG A. BETTERTON in the capacity herein stated.

PERSONALLY KNOWN TO ME.

MY COMMISSION EXPIRES

Notary Public, State of FLORIDA

ELISE J. DURANCEAU
Commission # HH 082709
Expires March 8, 2025
Bonded Thru Budget Notary Services

Exhibit A

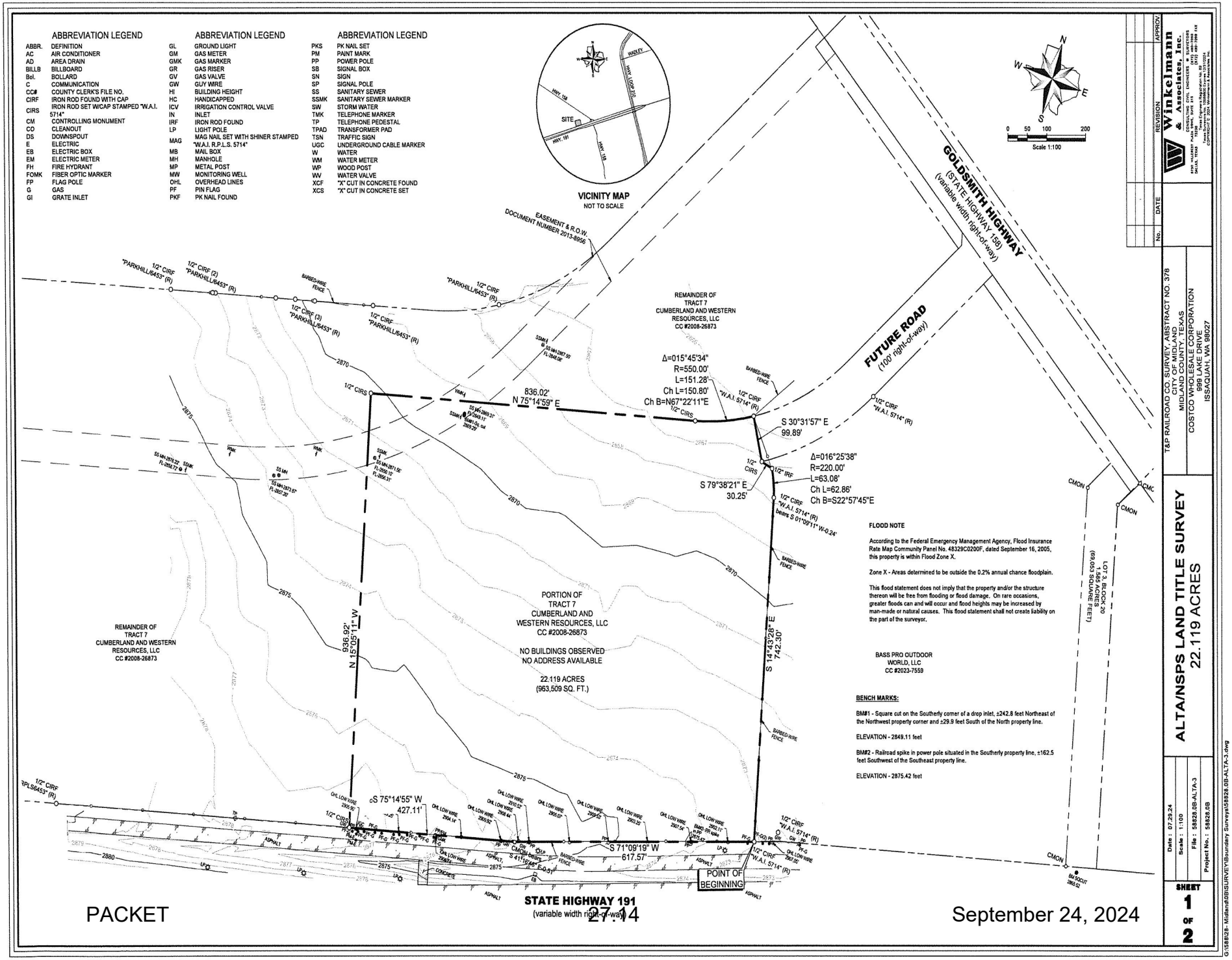
ABBREVIATION LEGEND
ABBR. DEFINITION
AC AIR CONDITIONER
AD AREA DRAIN
BILLB BILLBOARD
Bol. BOLLARD
C COMMUNICATION
CC# COUNTY CLERK'S FILE NO.
CIRF IRON ROD FOUND WITH CAP
CIRS IRON ROD SET W/CAP STAMPED "W.A.I. 5714"
CM CONTROLLING MONUMENT
CO CLEANOUT
DS DOWNSPOUT
E ELECTRIC
EB ELECTRIC BOX
EM ELECTRIC METER
FH FIRE HYDRANT
FOMK FIBER OPTIC MARKER
FP FLAG POLE
G GAS
GI GRATE INLET
GL GROUND LIGHT
GM GAS METER
GMK GAS MARKER
GR GAS RISER
GV GAS VALVE
GW GUY WIRE
HI BUILDING HEIGHT
HC HANDICAPPED
ICV IRRIGATION CONTROL VALVE
IN INLET
IRF IRON ROD FOUND
LP LIGHT POLE
MAG MAG NAIL SET WITH SHINER STAMPED "W.A.I. R.P.L.S. 5714"
MB MAIL BOX
MH MANHOLE
MP METAL POST
MW MONITORING WELL
OHL OVERHEAD LINES
PF PIN FLAG
PKF PK NAIL FOUND
PKS PK NAIL SET
PM PAINT MARK
PP POWER POLE
SB SIGNAL BOX
SN SIGN
SP SIGNAL POLE
SS SANITARY SEWER
SSMK SANITARY SEWER MARKER
SW STORM WATER
TMK TELEPHONE MARKER
TP TELEPHONE PEDESTAL
TPAD TRANSFORMER PAD
TSN TRAFFIC SIGN
UGC UNDERGROUND CABLE MARKER
W WATER
WM WATER METER
WP WOOD POST
WV WATER VALVE
XCF "X" CUT IN CONCRETE FOUND
XCS "X" CUT IN CONCRETE SET
VICINITY MAP
NOT TO SCALE
SITE
HWY. 158
HWY. 191
HWY. LOOP 250
Scale 1:100
GOLDSMITH HIGHWAY
(STATE HIGHWAY 158)
(variable width right-of-way)
FUTURE ROAD
(100' right-of-way)
EASEMENT & R.O.W.
DOCUMENT NUMBER 2013-8956
REMAINDER OF TRACT 7
CUMBERLAND AND WESTERN RESOURCES, LLC
CC #2008-26873
Δ=015°45'34"
R=550.00'
L=151.28'
Ch L=150.80'
Ch B=N67°22'11"E
836.02'
N 75°14'59" E
S 30°31'57" E
99.89'
Δ=016°25'38"
R=220.00'
L=63.08'
Ch L=62.86'
Ch B=S22°57'45"E
S 79°38'21" E
30.25'
FLOOD NOTE
According to the Federal Emergency Management Agency, Flood Insurance Rate Map Community Panel No. 48329C0200F, dated September 16, 2005, this property is within Flood Zone X.
Zone X - Areas determined to be outside the 0.2% annual chance floodplain.
This flood statement does not imply that the property and/or the structure thereon will be free from flooding or flood damage. On rare occasions, greater floods can and will occur and flood heights may be increased by man-made or natural causes. This flood statement shall not create liability on the part of the surveyor.
BASS PRO OUTDOOR WORLD, LLC
CC #2023-7559
BENCH MARKS:
BM#1 - Square cut on the Southerly corner of a drop inlet, ±242.8 feet Northeast of the Northwest property corner and ±29.9 feet South of the North property line.
ELEVATION - 2849.11 feet
BM#2 - Railroad spike in power pole situated in the Southerly property line, ±162.5 feet Southwest of the Southeast property line.
ELEVATION - 2875.42 feet
REMAINDER OF TRACT 7
CUMBERLAND AND WESTERN RESOURCES, LLC
CC #2008-26873
PORTION OF TRACT 7
CUMBERLAND AND WESTERN RESOURCES, LLC
CC #2008-26873
NO BUILDINGS OBSERVED
NO ADDRESS AVAILABLE
22.119 ACRES
(963,509 SQ. FT.)
N 15°05'11" W
936.92'
S 14°43'28" E
742.30'
S 75°14'55" W
427.11'
S 71°09'19" W
617.57'
POINT OF BEGINNING
LOT 3, BLOCK 20
1.565 ACRES
(68,053 SQUARE FEET)
STATE HIGHWAY 191
(variable width right-of-way)
Winkelmann & Associates, Inc.
CONSULTING CIVIL ENGINEERS • SURVEYORS
T&P RAILROAD CO. SURVEY, ABSTRACT NO. 378
MIDLAND COUNTY, TEXAS
COSTCO WHOLESALE CORPORATION
999 LAKE DRIVE
ISSAQUAH, WA 98027
ALTA/NSPS LAND TITLE SURVEY
22.119 ACRES
Date : 07.29.24
Scale : 1:100
File : 58828.0B-ALTA-3
Project No. : 58828.0B
SHEET 1 OF 2
G:\58828\- Midland\0B\SURVEY\Boundary Survey\58828.0B-ALTA-3.dwg

PROPERTY DESCRIPTION

STATE OF TEXAS §
COUNTY OF MIDLAND §

BEING a tract of land situated in the T&P RAILROAD CO. SURVEY, ABSTRACT NO. 378, City of Midland, Midland County, Texas and being a portion of a tract of land (Tract 7) as described in deed to Cumberland and Western Resources, LLC, recorded in County Clerk's File No. 2008-26873, Deed Records, Midland County, Texas, and being more particularly described as follows:

BEGINNING at a 1/2-inch iron rod with red plastic cap stamped "W.A.I. 5714" found for corner at the Southwesterly corner of a tract of land as described in deed to Bass Pro Outdoor World, LLC, recorded in County Clerk's File No. 2023-7559, Deed Records, Midland County, Texas, said iron rod being situated in the Northerly right-of-way line of State Highway 191 (variable width right-of-way);

THENCE South 71 deg 09 min 19 sec West, departing the Westerly line of said Bass Pro Outdoor World, LLC tract and along said Northerly right-of-way line, a distance of 617.57 feet to a point for corner from which a concrete monument found bears South 41 deg 16 min 46 sec East, a distance of 0.51 feet;

THENCE South 75 deg 14 min 55 sec West, continuing along said Northerly right-of-way line, a distance of 427.11 feet to a 1/2-inch iron rod with red plastic cap stamped "W.A.I. 5714" set for corner;

THENCE departing the Northerly right-of-way line of said State Highway 191 and over and across said Cumberland and Western Resources, LLC tract, the following:

North 15 deg 05 min 11 sec West, a distance of 936.92 feet to a 1/2-inch iron rod with red plastic cap stamped "W.A.I. 5714" set for corner;

North 75 deg 14 min 59 sec East, a distance of 836.02 feet to a 1/2-inch iron rod with red plastic cap stamped "W.A.I. 5714" set for corner and the beginning of a curve to the left having a radius of 550.00 feet, a central angle of 15 deg 45 min 34 sec, a chord bearing of North 67 deg 22 min 11 sec East and a chord length of 150.80 feet;

Along said curve to the left, an arc distance of 151.28 feet to a 1/2-inch iron rod with red plastic cap stamped "W.A.I. 5714" set for corner, said iron rod being at the terminus of a Future Road (100' right-of-way) and the most Northerly Northwest corner of said Bass Pro Outdoor World, LLC tract;

THENCE South 30 deg 31 min 57 sec East, along said terminus and the Westerly line of said Bass Pro Outdoor World, LLC tract, a distance of 99.89 feet to a 1/2-inch iron rod with red plastic cap stamped "W.A.I. 5714" set for corner;

THENCE South 79 deg 38 min 21 sec East, departing the terminus of said Future Road and continuing along said Westerly line, a distance of 30.25 feet to a 1/2-inch iron rod found for corner and the beginning of a non-tangent curve to the right having a radius of 220.00 feet, a central angle of 16 deg 25 min 38 sec, a chord bearing of South 22 deg 57 min 45 sec East and a chord length of 62.86 feet;

THENCE continuing along said Westerly line and along said non-tangent curve to the right, an arc distance of 63.08 feet to a point for corner from which a 1/2-inch iron rod with red plastic cap stamped "W.A.I. 5714" found bears South 01 deg 09 min 11 sec West, a distance of 0.24 feet;

THENCE South 14 deg 43 min 28 sec East, continuing along said Westerly line, a distance of 742.30 feet to the POINT OF BEGINNING.

CONTAINING within these metes and bounds 22.119 acres or 963,509 square feet of land, more or less.

Bearings shown hereon are based upon an on-the-ground Survey performed in the field on the 26th day of July, 2024, utilizing a G.P.S. bearing related to the Texas Coordinate System, Central Zone (4203), NAD 83, grid values from the GeoShack VRS network.

SCHEDULE "B" NOTES

Items corresponding to the Commitment for Title Insurance issued August 13, 2024 by First American Title Insurance Company bearing an effective date of July 26, 2024, GF# NCS-1227609-WA1.

1-10d. Intentionally omitted by Surveyor.

10e. All terms, conditions and provisions of that certain Right-of Way easement from Scharbauer Brothers & Co., a corporation to Colorado River Municipal Water District, dated January 06, 1959, recorded in Volume 308, Page 502, Official Public Records, Midland County, Texas. (Does not affect the subject property)

10f. All terms, conditions and provisions of that certain Right-of Way easement from Scharbauer Brothers & Co., a corporation to the State of Texas, dated September 16, 1959, recorded in Volume 334, Page 42, Official Public Records, Midland County, Texas. (Does not affect the subject property)

10g. All terms, conditions and provisions of that certain Right-of Way easement from Scharbauer Brothers & Co., a corporation to Texas Electric Service Company, dated April 13, 1960, recorded in Volume 337, Page 349, Official Public Records, Midland County, Texas. (Does not affect the subject property)

10h. All terms, conditions and provisions of that certain Right-of Way easement from Scharbauer Brothers & Co., a corporation to Texas Electric Service Company, dated September 21, 1961, recorded in Volume 372, Page 85, Official Public Records, Midland County, Texas. (Does not affect the subject property)

10i. All terms, conditions and provisions of that certain Right-of Way easement from Scharbauer Brothers & Co., a corporation to Pioneer Natural Gas Company, a Texas corporation, dated February 22, 1974, recorded in Volume 577, Page 693, Official Public Records, Midland County, Texas, (Affects the subject property, blanket)

10j-10l. Intentionally omitted by Surveyor.

10m. All terms, conditions and provisions of that certain Pipeline Easement Right-of Way from Spanish Trail Land & Cattle Co., LP to GRB Properties, Inc., General Partner for Stagg Investment I, Ltd., dated December 12, 2007, recorded in Volume 3083, Page 594, Official Public Records, Midland County, Texas. (Unable to plot, "Exhibit A", not included in the document)

10n. Intentionally omitted by Surveyor.

10o. Texas Local Government Code Development Agreement, recorded under County Clerk's File No. 2009-20614, Official Public Records, Midland County, Texas. (According to Section 5 of the provided document, the agreement appears to be expired)

10p. Intentionally omitted by Surveyor.

10q. All terms, conditions and provisions of that certain Water Pipeline Easement and Right-of Way easement from Cumberland & Western Resources, LLC, a Wyoming limited liability company to Midland County Fresh Water Supply District No. 1, dated August 22, 2012, recorded under County Clerk's File No. 2012-19430, Official Public Records, Midland County, Texas. (Does not affect the subject property)

10r. All terms, conditions and provisions of that certain Right-of Way easement from Cumberland & Western Resources, LLC, a Wyoming limited liability company to Midland County Fresh Water Supply District No. 1, dated April 23, 2013, recorded under County Clerk's File No. 2013-9942, Official Public Records, Midland County, Texas. (Does not affect the subject property)

10s. All terms, conditions and provisions of that certain Temporary Drainage Easement from Cumberland & Western Resources, LLC, a Wyoming limited liability company to City of Midland, dated June 05, 2013, recorded under County Clerk's File No. 2013-14110, Official Public Records, Midland County, Texas. (Unable to plot, "Exhibit A", not included in the document)

10t. All terms, conditions and provisions of that certain Water Pipeline and Right-of Way Easement from Cumberland & Western Resources, LLC, a Wyoming limited liability company to Midland County Fresh Water Supply District No. 1, dated June 13, 2012, recorded under County Clerk's File No. 2013-25259, Official Public Records, Midland County, Texas. (Does not affect the subject property)

10u. All terms, conditions and provisions of that certain Right-of Way Easement from Cumberland & Western Resources, LLC, a Wyoming limited liability company to Diamondback O&G LLC, dated October 15, 2015, recorded under County Clerk's File No. 2016-1532, Official Public Records, Midland County, Texas. (Does not affect the subject property)

10v. All terms, conditions and provisions of that certain Right-of Way Easement from Cumberland & Western Resources, LLC, a Wyoming limited liability company to Midland County Fresh Water Supply District No. 1, dated March 17, 2016, recorded under County Clerk's File No. 2016-23356, Official Public Records, Midland County, Texas. (Does not affect the subject property)

10w. All terms, conditions and provisions of that certain Right-of-Way Easement from Cumberland & Western Resources, LLC, a Wyoming limited liability company to Midland County Fresh Water Supply District No. 1, dated March 17, 2016, recorded under County Clerk's File No. 2016-23357, Official Public Records, Midland County, Texas. (Does not affect the subject property)

10x. All terms, conditions and provisions of that certain Right-of Way Easement from Cumberland & Western Resources, LLC, a Wyoming limited liability company to Diamondback E&P LLC, dated July 14, 2016, recorded under County Clerk's File No. 2016-30328, Official Public Records, Midland County, Texas. (Terms, conditions and provisions affect subject property, blanket; Unable to plot well locations, "Exhibit A", not included in the document)

10y. Service Agreement recorded under Clerk's File No. 2019-38533, Official Public Records, Midland County, Texas. (Does not affect the subject property). Certification recorded under Clerk's File No. 2020-7177, Official Public Records, Midland County, Texas. (Does not affect the subject property). Service Agreement recorded under Clerk's File No. 2020-9194, Official Public Records, Midland County, Texas. (Does not affect the subject property). Service Agreement recorded under Clerk's File No. 2021-18279, Official Public Records, Midland County, Texas. (Does not affect the subject property). Waiver of Surface Rights recorded under Clerk's File No. 2021-35457, Official Public Records, Midland County, Texas. (Does not affect the subject property)

10z. All terms, conditions and provisions of that certain Permanent Easement from Cumberland & Western Resources, LLC, a Wyoming limited liability company to Oncor Electric Delivery Company, LLC, a Delaware limited liability company, dated May 28, 2020, recorded under County Clerk's File No. 2020-21638, Official Public Records, Midland County, Texas. (Does not affect the subject property)

The Surveyor has not abstracted the record title and/or easements of the subject property. The Surveyor prepared this survey with the benefit of a title commitment described above and assumes no liability for any easements, right-of-way dedications or other title matters affecting the subject property which may have been filed in the real property records but are not disclosed in said title commitment.

SURVEYOR'S CERTIFICATION

This is to certify that this map or plat and the survey on which it is based were made in accordance with the 2021 Minimum Standard Detail Requirements for ALTA/NSPS Land Title Surveys, jointly established and adopted by ALTA and NSPS, and includes Items 1, 2, 3, 4, 7(a), 7(b)(1), 7(c), 8, 9, 13 and 14 of Table A thereof. The fieldwork was completed on 07/26/2024.

9/4/24

Leonard J. Lueker (*Original signature in red ink*)
Registered Professional Land Surveyor
Texas Registration No. 5714
l.lueker@winkelmann.com

Winkelmann & Associates, Inc.
6750 Hillcrest Plaza Drive, Suite 215
Dallas, Texas 75230
(972) 490-7090 www.winkelmann.com

STATE OF TEXAS
REGISTERED
LEONARD JAY LUEKER
5714
PROFESSIONAL
LAND SURVEYOR

Please note that the use of the word "certify" or "certification" in this document is the surveyor's professional opinion regarding those facts or findings which are the subject of this survey and does not constitute a warranty or guarantee, either expressed or implied.

No.	DATE	REVISION	APPROV

Winkelmann & Associates, Inc.
CONSULTING CIVIL ENGINEERS & SURVEYORS
6750 HILLCREST PLAZA DRIVE, SUITE 215 DALLAS, TEXAS 75230 (972) 490-7090 FAX
Texas Engineer Registration No. F-2312 Texas Surveyor Firm 100800-00 Expires 12/31/2024
Texas Surveyor Registration No. 100800-00 Expires 12/31/2024

T&P RAILROAD CO. SURVEY, ABSTRACT NO. 378
CITY OF MIDLAND
MIDLAND COUNTY, TEXAS
COSTCO WHOLESALE CORPORATION
999 LAKE DRIVE
ISSAQUAH, WA 98027

ALTA/NSPS LAND TITLE SURVEY
22.119 ACRES

Date : 07.29.24
Scale : N/A
File : 58828.05-ALTA-3
Project No. : 58828.0B

SHEET 2 OF 2

G:\58828- Midland\0B\SURVEY\Boundary Survey\58828.0B-ALTA-3.dwg


LAUREL LN
THULE DR
MATHESON DR
HOOPER WAY
CAPE DYER LN
BEAR DR
IRONWOOD DR
MOSSWOOD DR
ST HWY 191




MIDLAND
Be the Energy!
COSTCO WHOLESALE
Annexation
September 24, 2024
Visit Our Website
MIDLANDTEXAS.GOV

Costco Wholesale

- Property Owner: Cumberland & Western Resources, LLC
- Applicant: Michael Clark with Winkelmann & Associates (acting on property owners' behalf)]
- Representative: Costco Wholesale
- Initial Zoning
- Location: North of Highway 191 (ETJ)
- Reason for Request: For the development of a retail store known as Costco Wholesale

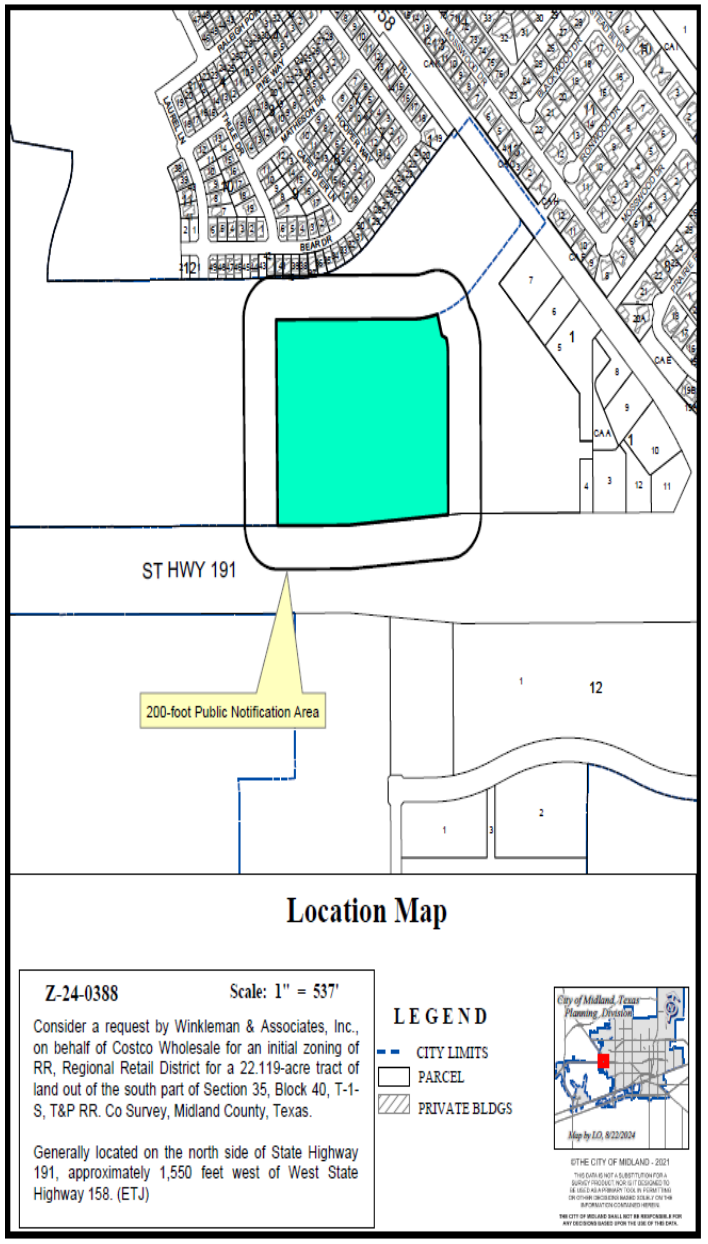

Costco Wholesale

- Current Zoning: ETJ, Extraterritorial Jurisdiction
- Surrounding Zoning:
  - North: ETJ, Extraterritorial Jurisdiction
  - South & East: RR, Regional Retail District
  - West: ETJ, Extraterritorial Jurisdiction
- Proposed Zoning: RR, Regional Retail District

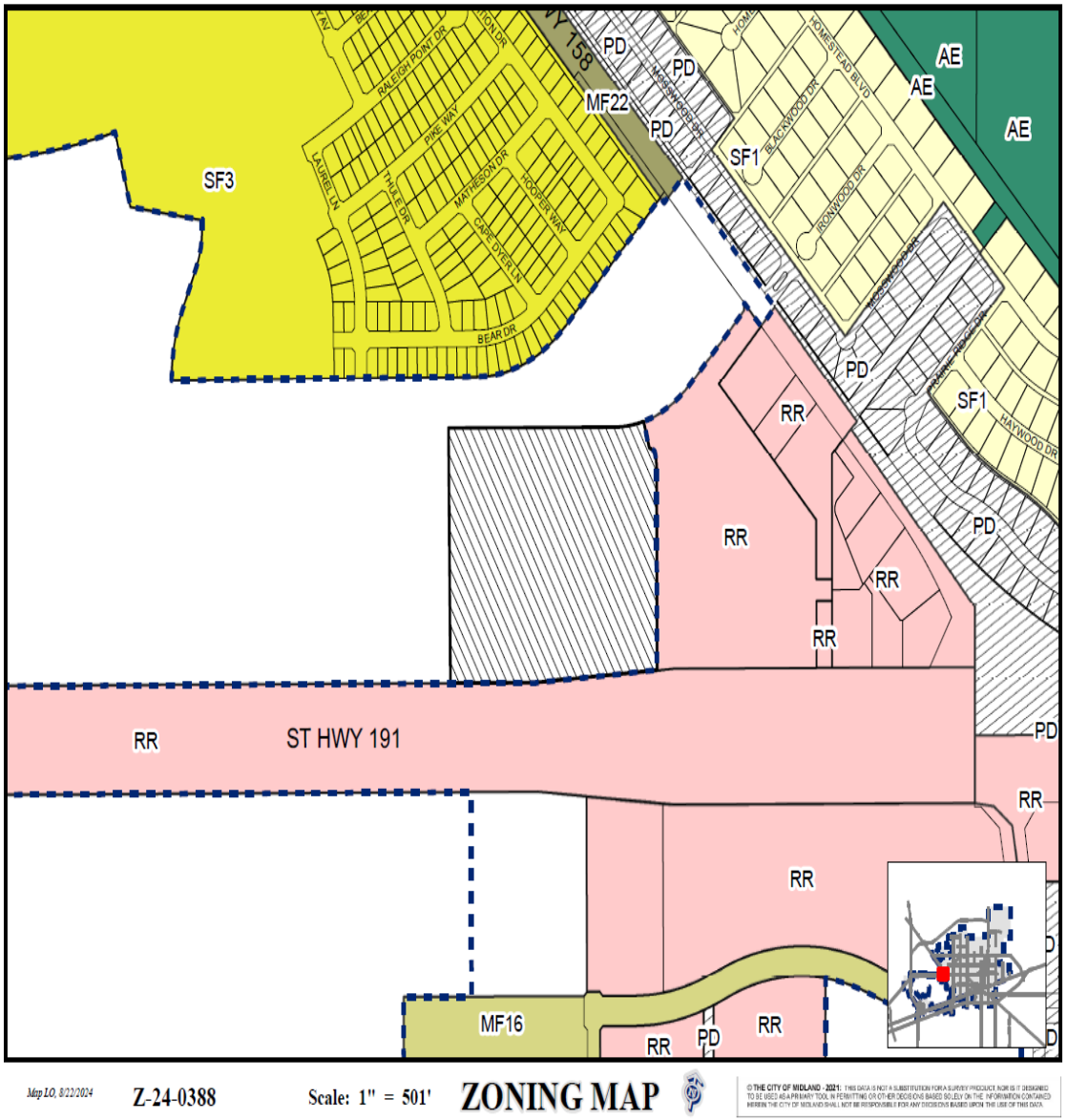

Costco Wholesale

- Current Use of the Property: Vacant
- Proposed Use of the Property: Retail Store & Gasoline Fueling Station
- Surrounding Uses:
  - North: vacant
  - South: Highway 191
  - East: vacant
  - West: vacant

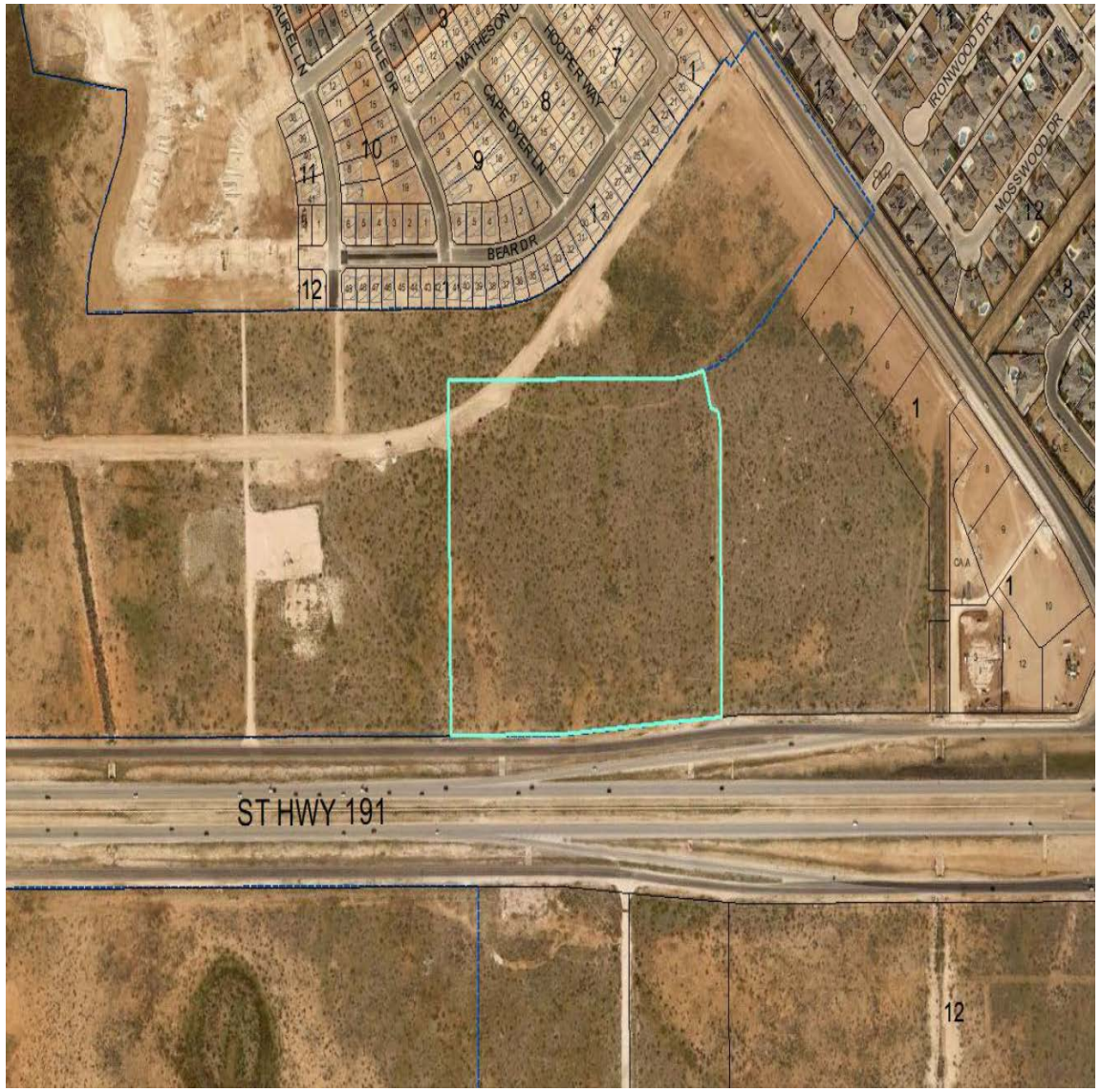



On Highway 191, Looking North

- TCT Land Use Designation: Urban-High (U-H)
- Supported Uses:
  - Supports a mix of complementary uses.
- Request is compatible with the surrounding area and the Tall City Tomorrow Plan.

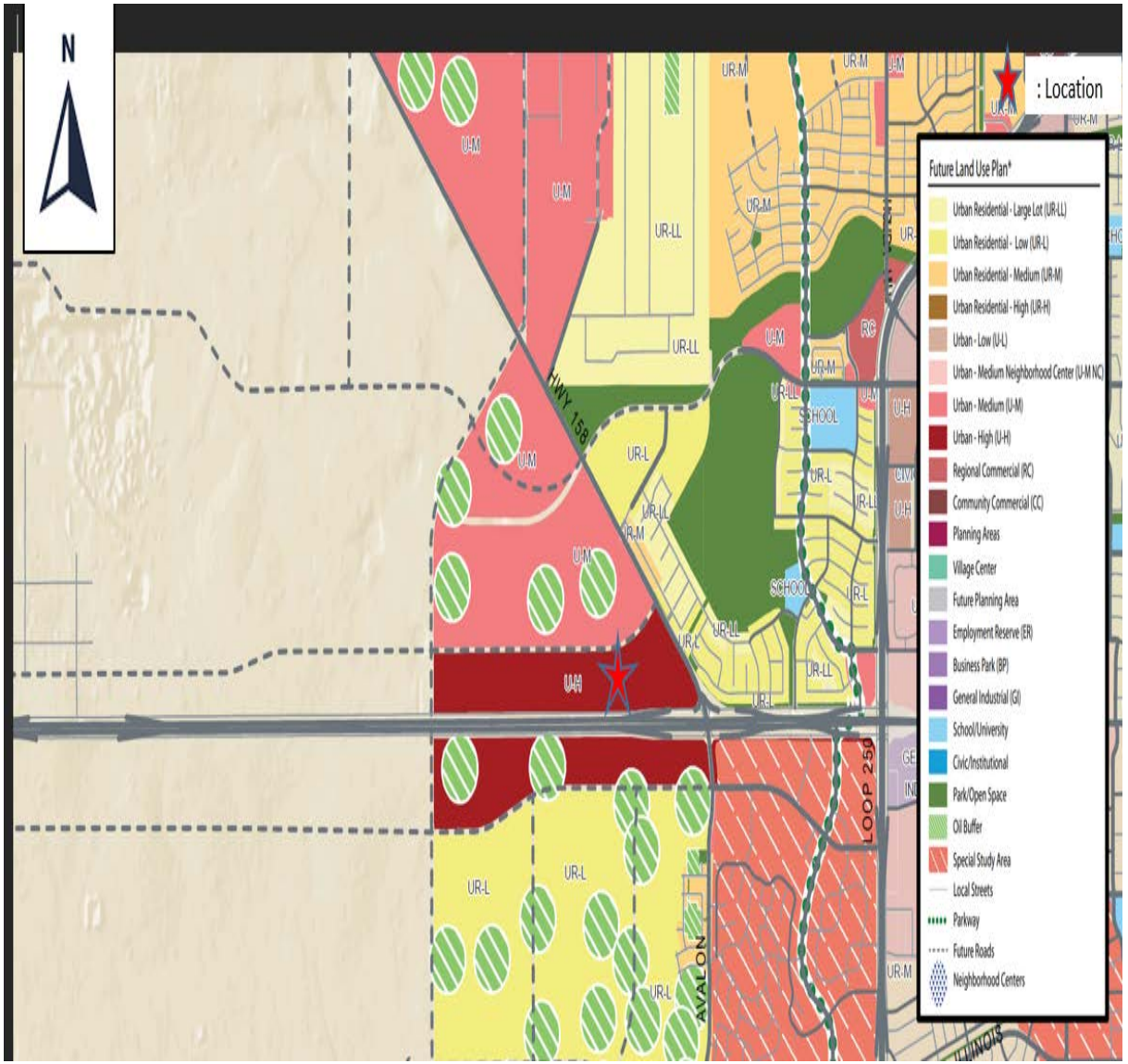

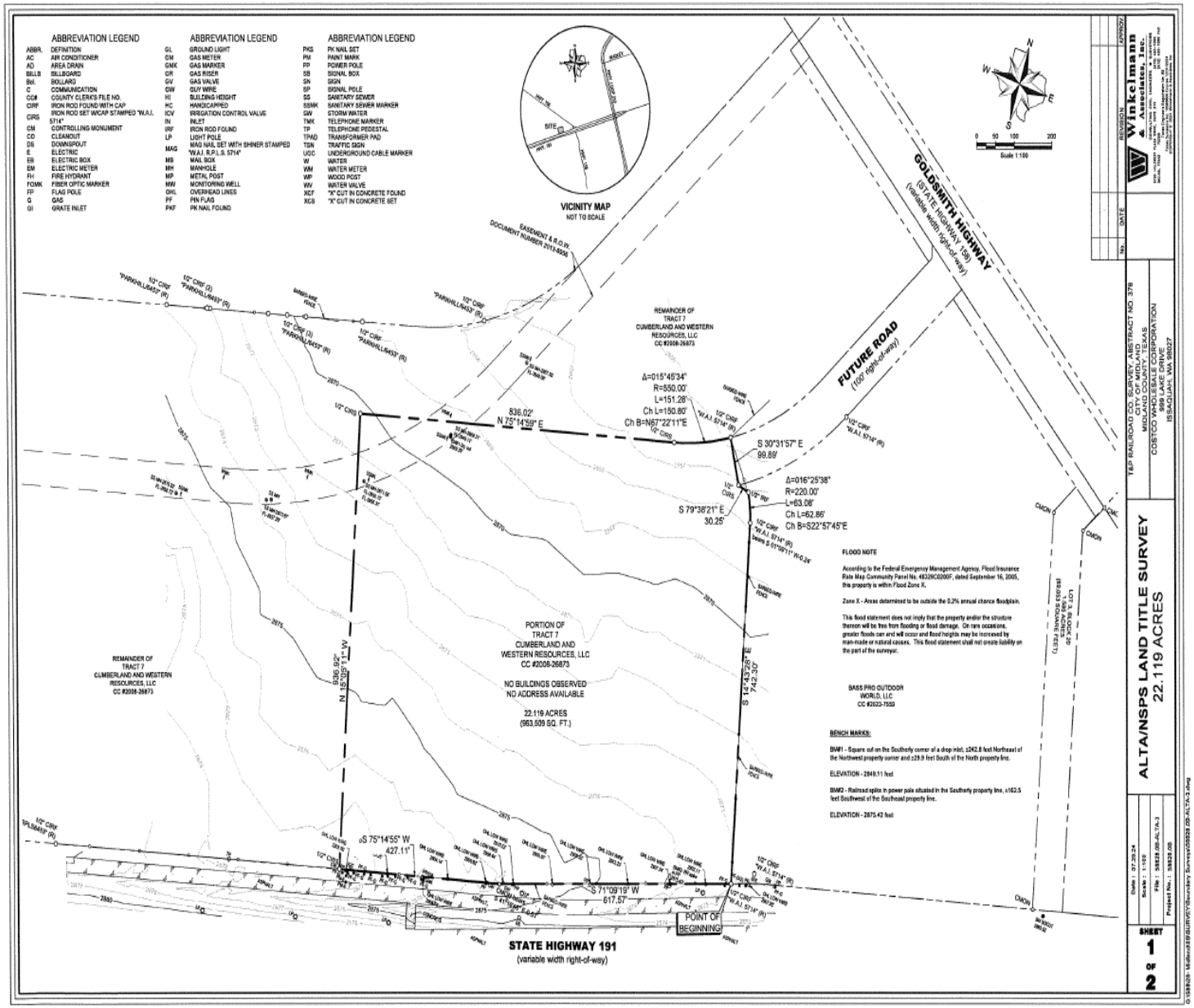

MIDLAND Be the Energy!

- No objections received.
- The Planning & Zoning Commission recommended approval of the initial zoning request September 3, 2024.
- Staff recommends APPROVAL of this request for annexation.

MISSION

Deliver exceptional services and promote a high quality of life and place for ALL our citizens.



City Council Meeting

Item Number: 28

Meeting Date: September 24, 2024

To: City Council / City Manager

From: Landon Ochoa, Planning Division Manager

Subject: AN ORDINANCE ESTABLISHING THE INITIAL ZONING CLASSIFICATION OF THE AREA INDICATED AS BEING A 22.119-ACRE TRACT OF LAND OUT OF SECTION 35, BLOCK 40, T-1-S, T&P RR CO. SURVEY, MIDLAND COUNTY, TEXAS, AS AN RR, REGIONAL RETAIL DISTRICT; SAID TRACT BEING GENERALLY LOCATED ON THE NORTH SIDE OF STATE HIGHWAY 191, APPROXIMATELY 1,550 FEET WEST OF STATE HIGHWAY 158; CONTAINING A CUMULATIVE CLAUSE; CONTAINING A SAVINGS AND SEVERABILITY CLAUSE; PROVIDING FOR A MAXIMUM PENALTY OR FINE OF TWO THOUSAND DOLLARS ($2,000.00); AND ORDERING PUBLICATION (DISTRICT: NONE) (DEVELOPMENT SERVICES) (QUALITY OF LIFE AND PLACE)

Purpose:

Winkleman & Associates, Inc. on behalf of Costco Wholesale, is requesting an initial zoning of RR, Regional Retail District for a property located on the north side of State Highway 191 for the development of a retail store known as Costco Wholesale.

Recommended City Council Action:

Approve

Fiscal Impact:

None.

Strategic Priority:

Quality of Life and Place

Discussion:

Surrounding Zoning and Land Use:

The properties to the north are zoned SF-3, Single-Family Dwelling District and are the location of vacant residential sized lots. The property to the east is zoned RR, Regional Retail District and is the location of a vacant property. The property to the south is zoned RR, Regional Retail District and is the location of State Highway 191. The property to the east is located in the ETJ and is vacant.

Analysis:

The property is currently in the process of being annexed into city limits. An annexation of the property will need to be approved first before the initial zoning can be approved. The property will also need to be platted. A preliminary plat has been submitted as of September 13, 2024 and is under review.

The Tall City Tomorrow Comprehensive Plan designates this area as Urban -High which calls for a mix of complementary uses, including multi-family residential, large offices, medical buildings, regional commercial, limited industrial, institutional uses such as churches, schools, or hospitals, and other regional attractors.

The associated annexation request is scheduled for September 24, 2024 City Council meeting.

Engineering: (Approved)

No objection to zoning. [For the Applicant's information only.]

Site drainage, utilities, driveway access, and traffic circulation may be adjusted during construction drawing review as necessary to receive building permit approval from Engineering and Traffic Operations. [For the Applicant's information only.]

Transportation: (Approved)

Site drainage, utilities, driveway access, and traffic circulation may be adjusted during construction drawing review as necessary to receive building permit approval from Engineering and Traffic Operations. [For the Applicant's information only.]

No objection to zone change. [For the Applicant's information only.]

Fire: (Approved)

No objections.

Building Code: (Approved)

No issues. All future structures must adhere to the 2018 International Building Codes, the 2015

International Energy Code, the 2020 NEC requirements, the 2015 International Fire Codes, local city ordinances, zoning requirements, established setbacks, oil and gas considerations, and floodplain requirements if necessary. Code versions are subject to change depending on time of new code edition adoption in the City of Midland and date of permit application.

Oil and Gas: (Approved)

No Oil & Gas well concerns. Informational: No Oil or Gas wells identified with 500 ft. radius for city permitted well or a 135 ft. radius for non-permitted wells on plat. Please note if oil & gas wells are not identified or left off plat, this could prevent receiving city permits for structures. Any plugged and abandoned (P&A) well would need to be identified with comments- No structure shall be built over an abandoned well.

Planning:

The Planning and Zoning Commission recommended approval of this request on September 3, 2024.

Therefore, staff recommends approval of this request.

Letters of Objection:

As of September 18, 2024, staff has not received any objection letters.

Attachments:

Petition (Exhibit A)
Application
Maps
PowerPoint

Jose E. Ort

City Manager's Office

ORDINANCE NO. _____

AN ORDINANCE ESTABLISHING THE INITIAL ZONING CLASSIFICATION OF THE AREA INDICATED AS BEING A 22.119-ACRE TRACT OF LAND OUT OF SECTION 35, BLOCK 40, T-1-S, T&P RR CO. SURVEY, MIDLAND COUNTY, TEXAS, AS AN RR, REGIONAL RETAIL DISTRICT; SAID TRACT BEING GENERALLY LOCATED ON THE NORTH SIDE OF STATE HIGHWAY 191, APPROXIMATELY 1,550 FEET WEST OF STATE HIGHWAY 158; CONTAINING A CUMULATIVE CLAUSE; CONTAINING A SAVINGS AND SEVERABILITY CLAUSE; PROVIDING FOR A MAXIMUM PENALTY OR FINE OF TWO THOUSAND DOLLARS ($2,000.00); AND ORDERING PUBLICATION.

WHEREAS, notice has been given to all parties in interest and citizens by publication in the official newspaper and otherwise of a public hearing to be held before the City Council on September 24, 2024 (the "Hearing Date"), to consider an amendment to the Zoning District Map of the City of Midland, Texas, so as to establish the initial zoning classification of the property described in Section One hereof as an RR, Regional Retail District, as set out in Title XI, Chapter 1 of the City Code of Midland, Texas; and

WHEREAS, such a public hearing was held in the Council Chambers on the Hearing Date, as advertised, at which all parties in interest and citizens were given an opportunity to be heard; and after considering among other things, the character of the property involved and the surrounding area and its peculiar suitability for particular uses; and with a view to conserving the value of buildings and encouraging the most appropriate use of land throughout such municipality, the Council finds it to be in the best interest of the health, safety, morals and general welfare of the City of Midland to amend the Zoning Map as established;

NOW, THEREFORE, BE IT ORDAINED BY THE CITY COUNCIL OF THE CITY OF MIDLAND, TEXAS:

SECTION ONE. That the initial zoning classification of the area indicated Exhibit "A", attached hereto and incorporated herein by reference, is hereby established as

District Map accordingly;

an RR, Regional Retail District, and the Zoning District Map of the City of Midland, Te xas,

is hereby amended to reflect the establishment of this initial zoning classification.

SECTION THREE. If any section, subsection, sentence, clause or phrase of this

SECTION TWO. The provisions of this ordinance are to be cumulative of all other

ordinance is, for any reason, held to be unconstitutional or invalid, such holding shall not

ordinances or parts of ordinances governing or regulating the same subject matter as that

affect the validity of the remaining portions of this ordinance. The Council of the City of

covered herein; provided, however, that all prior ordinances or parts of ordinances

Midland hereby declares that it would have passed this ordinance and each section,

inconsistent with or in conflict with any of the provisions of this ordinance are hereby

subsection, sentence, clause, or phrase hereof irrespective of the fact that any one or more

expressly repealed to the extent of any such inconsistency or conflict.

sections, subsections, sentences, clauses, or phrases be declared unconstitutional or invalid.

SECTION FOUR. The penalty for violation of this ordinance shall be in accordance

The above and foregoing ordinance was duly proposed, read in full and adopted on

with the general penalty provisions contained in Section 1-3-1 of the City Code of Midland,

first reading, the ___ day of _____, A.D., 2024; and passed to second reading on

Texas, which provides for a fine not exceeding two thousand dollars ($2,000.00).

Council members voting "AYE":

SECTION FIVE. The City Secretary is hereby authorized and directed to publish

motion of Council member _____, seconded by Council member _____,

Council members voting "NAY":

by the following vote:

the descriptive caption of this ordinance in the manner and for the length of time prescribed

by the law as an alternative method of publication.

The above and foregoing ordinance was read in full and finally adopted by the

following vote upon motion of Council member _____, seconded by Council

Council members voting "AYE":

member _____, on the ___ day of _____, A.D., 2024, at a regular meeting

Council members voting "NAY":

of the City Council:

PASSED AND APPROVED THIS _____ day of _____, A.D., 2024.

_____

Lori Merritt Blong, Mayor

ATTEST:

_____

Marcia Bentley-German, City Secretary

APPROVED AS TO CONTENT

AND COMPLETENESS:

_____

Elizabeth Triggs, Planning and Development Officer

APPROVED ONLY AS TO FORM:

_____

John Ohnemiller, City Attorney

EXHIBIT "A"

PETITION FOR ANNEXATION

Dear City of Midland:

As current owner of the tract(s) of land described in Exhibit(s) A (the "Property"), said Exhibit(s) being attached hereto and incorporated herein, CUMBERLAND AND WESTERN RESOURCES, LLC ("Owner") submits this petition for annexation and hereby requests that the Property be added to and annexed to the City of Midland.

Signature of Owner or Owner's Authorized Representative

GREG BETTERTON

Printed Name

MANAGER

Title

THE STATE OF FLORIDA §
§
COUNTY OF SARASOTA §

This instrument was acknowledged before me on the 5 day of SEPTEMBER 20 24, by GREG A. BETTERTON in the capacity herein stated.
PERSONALLY KNOWN TO ME.

MY COMMISSION EXPIRES

Notary Public, State of FLORIDA

ELISE J. DURANCEAU
Commission # HH 082709
Expires March 8, 2025
Bonded Thru Budget Notary Services

Exhibit A

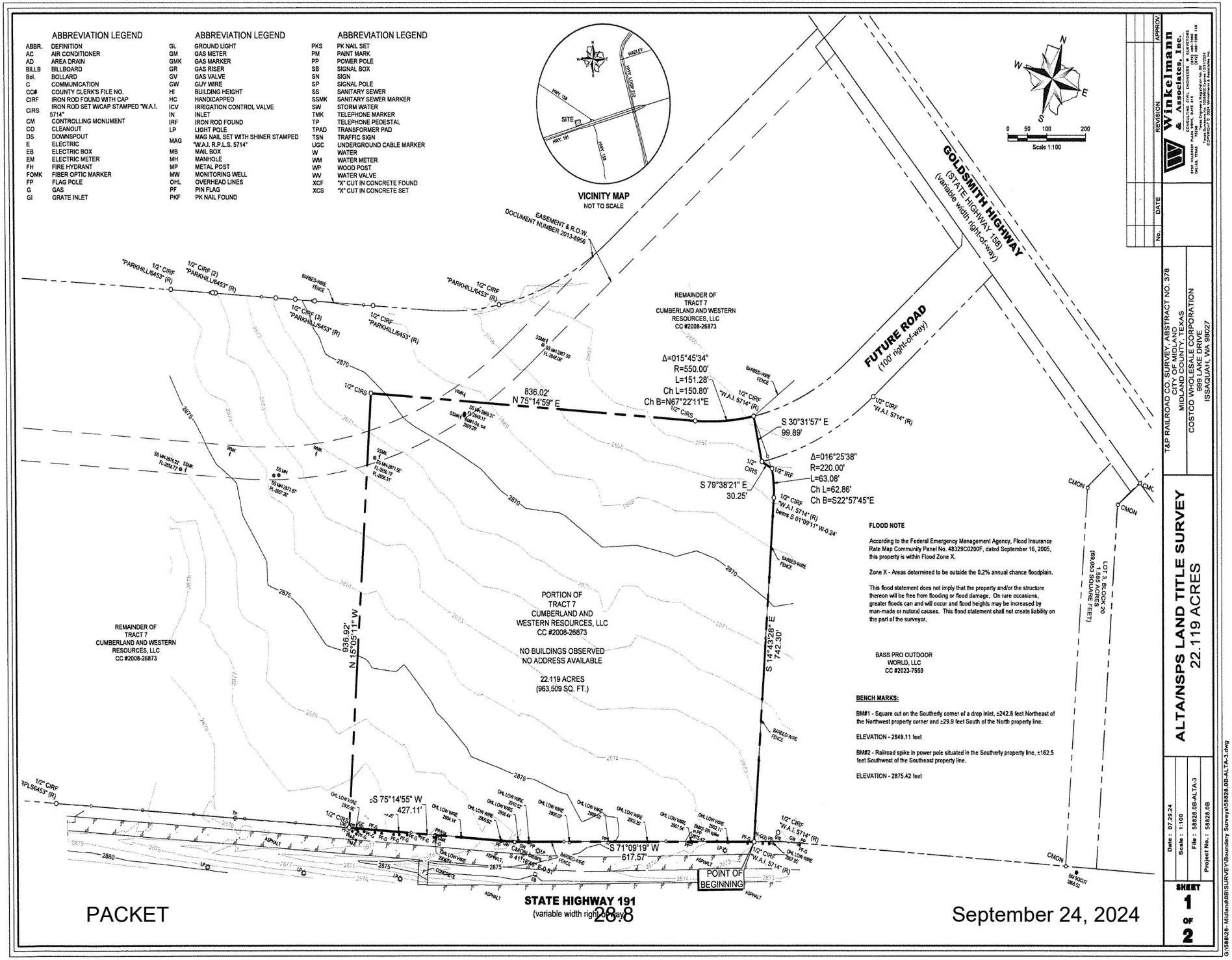

ABBREVIATION LEGEND
ABBR. DEFINITION
AC AIR CONDITIONER
AD AREA DRAIN
BILLB BILLBOARD
Bol. BOLLARD
C COMMUNICATION
CC# COUNTY CLERK'S FILE NO.
CIRF IRON ROD FOUND WITH CAP
CIRS IRON ROD SET W/CAP STAMPED "W.A.I. 5714"
CM CONTROLLING MONUMENT
CO CLEANOUT
DS DOWNSPOUT
E ELECTRIC
EB ELECTRIC BOX
EM ELECTRIC METER
FH FIRE HYDRANT
FOMK FIBER OPTIC MARKER
FP FLAG POLE
G GAS
GI GRATE INLET
ABBREVIATION LEGEND
GL GROUND LIGHT
GM GAS METER
GMK GAS MARKER
GR GAS RISER
GV GAS VALVE
GW GUY WIRE
HI BUILDING HEIGHT
HC HANDICAPPED
ICV IRRIGATION CONTROL VALVE
IN INLET
IRF IRON ROD FOUND
LP LIGHT POLE
MAG MAG NAIL SET WITH SHINER STAMPED "W.A.I. R.P.L.S. 5714"
MB MAIL BOX
MH MANHOLE
MP METAL POST
MW MONITORING WELL
OHL OVERHEAD LINES
PF PIN FLAG
PKF PK NAIL FOUND
ABBREVIATION LEGEND
PKS PK NAIL SET
PM PAINT MARK
PP POWER POLE
SB SIGNAL BOX
SN SIGN
SP SIGNAL POLE
SS SANITARY SEWER
SSMK SANITARY SEWER MARKER
SW STORM WATER
TMK TELEPHONE MARKER
TP TELEPHONE PEDESTAL
TPAD TRANSFORMER PAD
TSN TRAFFIC SIGN
UGC UNDERGROUND CABLE MARKER
W WATER
WM WATER METER
WP WOOD POST
WV WATER VALVE
XCF "X" CUT IN CONCRETE FOUND
XCS "X" CUT IN CONCRETE SET
VICINITY MAP
NOT TO SCALE
SITE
HWY. 158
HWY. 191
HWY. LOOP 250
HADLEY
Scale 1:100
GOLDSMITH HIGHWAY
(STATE HIGHWAY 158)
(variable width right-of-way)
FUTURE ROAD
(100' right-of-way)
EASEMENT & R.O.W.
DOCUMENT NUMBER 2013-8956
REMAINDER OF
TRACT 7
CUMBERLAND AND WESTERN
RESOURCES, LLC
CC #2008-26873
Δ=015°45'34"
R=550.00'
L=151.28'
Ch L=150.80'
Ch B=N67°22'11"E
836.02'
N 75°14'59" E
S 30°31'57" E
99.89'
Δ=016°25'38"
R=220.00'
L=63.08'
Ch L=62.86'
Ch B=S22°57'45"E
S 79°38'21" E
30.25'
PORTION OF
TRACT 7
CUMBERLAND AND
WESTERN RESOURCES, LLC
CC #2008-26873
NO BUILDINGS OBSERVED
NO ADDRESS AVAILABLE
22.119 ACRES
(963,509 SQ. FT.)
936.92'
N 15°05'11" W
S 14°43'28" E
742.30'
S 75°14'55" W
427.11'
S 71°09'19" W
617.57'
POINT OF
BEGINNING
STATE HIGHWAY 191
(variable width right-of-way)
LOT 3, BLOCK 20
1.585 ACRES
(69,053 SQUARE FEET)
BASS PRO OUTDOOR
WORLD, LLC
CC #2023-7559
FLOOD NOTE
According to the Federal Emergency Management Agency, Flood Insurance Rate Map Community Panel No. 48329C0200F, dated September 16, 2005, this property is within Flood Zone X.
Zone X - Areas determined to be outside the 0.2% annual chance floodplain.
This flood statement does not imply that the property and/or the structure thereon will be free from flooding or flood damage. On rare occasions, greater floods can and will occur and flood heights may be increased by man-made or natural causes. This flood statement shall not create liability on the part of the surveyor.
BENCH MARKS:
BM#1 - Square cut on the Southerly corner of a drop inlet, ±242.8 feet Northeast of the Northwest property corner and ±29.9 feet South of the North property line.
ELEVATION - 2849.11 feet
BM#2 - Railroad spike in power pole situated in the Southerly property line, ±162.5 feet Southwest of the Southeast property line.
ELEVATION - 2875.42 feet
Winkelmann & Associates, Inc.
T&P RAILROAD CO. SURVEY, ABSTRACT NO. 378
CITY OF MIDLAND
MIDLAND COUNTY, TEXAS
COSTCO WHOLESALE CORPORATION
999 LAKE DRIVE
ISSAQUAH, WA 98027
ALTA/NSPS LAND TITLE SURVEY
22.119 ACRES
Date : 07.29.24
Scale : 1:100
File : 58828.0B-ALTA-3
Project No. : 58828.0B
SHEET
1
OF
2

PROPERTY DESCRIPTION

STATE OF TEXAS §
COUNTY OF MIDLAND §

BEING a tract of land situated in the T&P RAILROAD CO. SURVEY, ABSTRACT NO. 378, City of Midland, Midland County, Texas and being a portion of a tract of land (Tract 7) as described in deed to Cumberland and Western Resources, LLC, recorded in County Clerk's File No. 2008-26873, Deed Records, Midland County, Texas, and being more particularly described as follows:

BEGINNING at a 1/2-inch iron rod with red plastic cap stamped "W.A.I. 5714" found for corner at the Southwesterly corner of a tract of land as described in deed to Bass Pro Outdoor World, LLC, recorded in County Clerk's File No. 2023-7559, Deed Records, Midland County, Texas, said iron rod being situated in the Northerly right-of-way line of State Highway 191 (variable width right-of-way);

THENCE South 71 deg 09 min 19 sec West, departing the Westerly line of said Bass Pro Outdoor World, LLC tract and along said Northerly right-of-way line, a distance of 617.57 feet to a point for corner from which a concrete monument found bears South 41 deg 16 min 46 sec East, a distance of 0.51 feet;

THENCE South 75 deg 14 min 55 sec West, continuing along said Northerly right-of-way line, a distance of 427.11 feet to a 1/2-inch iron rod with red plastic cap stamped "W.A.I. 5714" set for corner;

THENCE departing the Northerly right-of-way line of said State Highway 191 and over and across said Cumberland and Western Resources, LLC tract, the following:

North 15 deg 05 min 11 sec West, a distance of 936.92 feet to a 1/2-inch iron rod with red plastic cap stamped "W.A.I. 5714" set for corner;

North 75 deg 14 min 59 sec East, a distance of 836.02 feet to a 1/2-inch iron rod with red plastic cap stamped "W.A.I. 5714" set for corner and the beginning of a curve to the left having a radius of 550.00 feet, a central angle of 15 deg 45 min 34 sec, a chord bearing of North 67 deg 22 min 11 sec East and a chord length of 150.80 feet;

Along said curve to the left, an arc distance of 151.28 feet to a 1/2-inch iron rod with red plastic cap stamped "W.A.I. 5714" set for corner, said iron rod being at the terminus of a Future Road (100' right-of-way) and the most Northerly Northwest corner of said Bass Pro Outdoor World, LLC tract;

THENCE South 30 deg 31 min 57 sec East, along said terminus and the Westerly line of said Bass Pro Outdoor World, LLC tract, a distance of 99.89 feet to a 1/2-inch iron rod with red plastic cap stamped "W.A.I. 5714" set for corner;

THENCE South 79 deg 38 min 21 sec East, departing the terminus of said Future Road and continuing along said Westerly line, a distance of 30.25 feet to a 1/2-inch iron rod found for corner and the beginning of a non-tangent curve to the right having a radius of 220.00 feet, a central angle of 16 deg 25 min 38 sec, a chord bearing of South 22 deg 57 min 45 sec East and a chord length of 62.86 feet;

THENCE continuing along said Westerly line and along said non-tangent curve to the right, an arc distance of 63.08 feet to a point for corner from which a 1/2-inch iron rod with red plastic cap stamped "W.A.I. 5714" found bears South 01 deg 09 min 11 sec West, a distance of 0.24 feet;

THENCE South 14 deg 43 min 28 sec East, continuing along said Westerly line, a distance of 742.30 feet to the POINT OF BEGINNING.

CONTAINING within these metes and bounds 22.119 acres or 963,509 square feet of land, more or less.

Bearings shown hereon are based upon an on-the-ground Survey performed in the field on the 26th day of July, 2024, utilizing a G.P.S. bearing related to the Texas Coordinate System, Central Zone (4203), NAD 83, grid values from the GeoShack VRS network.

SCHEDULE "B" NOTES

Items corresponding to the Commitment for Title Insurance issued August 13, 2024 by First American Title Insurance Company bearing an effective date of July 26, 2024, GF# NCS-1227609-WA1.

1-10d. Intentionally omitted by Surveyor.

10e. All terms, conditions and provisions of that certain Right-of Way easement from Scharbauer Brothers & Co., a corporation to Colorado River Municipal Water District, dated January 06, 1959, recorded in Volume 308, Page 502, Official Public Records, Midland County, Texas. (Does not affect the subject property)

10f. All terms, conditions and provisions of that certain Right-of Way easement from Scharbauer Brothers & Co., a corporation to the State of Texas, dated September 16, 1959, recorded in Volume 334, Page 42, Official Public Records, Midland County, Texas. (Does not affect the subject property)

10g. All terms, conditions and provisions of that certain Right-of Way easement from Scharbauer Brothers & Co., a corporation to Texas Electric Service Company, dated April 13, 1960, recorded in Volume 337, Page 349, Official Public Records, Midland County, Texas. (Does not affect the subject property)

10h. All terms, conditions and provisions of that certain Right-of Way easement from Scharbauer Brothers & Co., a corporation to Texas Electric Service Company, dated September 21, 1961, recorded in Volume 372, Page 85, Official Public Records, Midland County, Texas. (Does not affect the subject property)

10i. All terms, conditions and provisions of that certain Right-of Way easement from Scharbauer Brothers & Co., a corporation to Pioneer Natural Gas Company, a Texas corporation, dated February 22, 1974, recorded in Volume 577, Page 693, Official Public Records, Midland County, Texas, (Affects the subject property, blanket)

10j-10l. Intentionally omitted by Surveyor.

10m. All terms, conditions and provisions of that certain Pipeline Easement Right-of Way from Spanish Trail Land & Cattle Co., LP to GRB Properties, Inc., General Partner for Stagg Investment I, Ltd., dated December 12, 2007, recorded in Volume 3083, Page 594, Official Public Records, Midland County, Texas. (Unable to plot, "Exhibit A", not included in the document)

10n. Intentionally omitted by Surveyor.

10o. Texas Local Government Code Development Agreement, recorded under County Clerk's File No. 2009-20614, Official Public Records, Midland County, Texas. (According to Section 5 of the provided document, the agreement appears to be expired)

10p. Intentionally omitted by Surveyor.

10q. All terms, conditions and provisions of that certain Water Pipeline Easement and Right-of Way easement from Cumberland & Western Resources, LLC, a Wyoming limited liability company to Midland County Fresh Water Supply District No. 1, dated August 22, 2012, recorded under County Clerk's File No. 2012-19430, Official Public Records, Midland County, Texas. (Does not affect the subject property)

10r. All terms, conditions and provisions of that certain Right-of Way easement from Cumberland & Western Resources, LLC, a Wyoming limited liability company to Midland County Fresh Water Supply District No. 1, dated April 23, 2013, recorded under County Clerk's File No. 2013-9942, Official Public Records, Midland County, Texas. (Does not affect the subject property)

10s. All terms, conditions and provisions of that certain Temporary Drainage Easement from Cumberland & Western Resources, LLC, a Wyoming limited liability company to City of Midland, dated June 05, 2013, recorded under County Clerk's File No. 2013-14110, Official Public Records, Midland County, Texas. (Unable to plot, "Exhibit A", not included in the document)

10t. All terms, conditions and provisions of that certain Water Pipeline and Right-of Way Easement from Cumberland & Western Resources, LLC, a Wyoming limited liability company to Midland County Fresh Water Supply District No. 1, dated June 13, 2012, recorded under County Clerk's File No. 2013-25259, Official Public Records, Midland County, Texas. (Does not affect the subject property)

10u. All terms, conditions and provisions of that certain Right-of Way Easement from Cumberland & Western Resources, LLC, a Wyoming limited liability company to Diamondback O&G LLC, dated October 15, 2015, recorded under County Clerk's File No. 2016-1532, Official Public Records, Midland County, Texas. (Does not affect the subject property)

10v. All terms, conditions and provisions of that certain Right-of Way Easement from Cumberland & Western Resources, LLC, a Wyoming limited liability company to Midland County Fresh Water Supply District No. 1, dated March 17, 2016, recorded under County Clerk's File No. 2016-23356, Official Public Records, Midland County, Texas. (Does not affect the subject property)

10w. All terms, conditions and provisions of that certain Right-of-Way Easement from Cumberland & Western Resources, LLC, a Wyoming limited liability company to Midland County Fresh Water Supply District No. 1, dated March 17, 2016, recorded under County Clerk's File No. 2016-23357, Official Public Records, Midland County, Texas. (Does not affect the subject property)

10x. All terms, conditions and provisions of that certain Right-of Way Easement from Cumberland & Western Resources, LLC, a Wyoming limited liability company to Diamondback E&P LLC, dated July 14, 2016, recorded under County Clerk's File No. 2016-30328, Official Public Records, Midland County, Texas. (Terms, conditions and provisions affect subject property, blanket; Unable to plot well locations, "Exhibit A", not included in the document)

10y. Service Agreement recorded under Clerk's File No. 2019-38533, Official Public Records, Midland County, Texas. (Does not affect the subject property). Certification recorded under Clerk's File No. 2020-7177, Official Public Records, Midland County, Texas. (Does not affect the subject property). Service Agreement recorded under Clerk's File No. 2020-9194, Official Public Records, Midland County, Texas. (Does not affect the subject property). Service Agreement recorded under Clerk's File No. 2021-18279, Official Public Records, Midland County, Texas. (Does not affect the subject property). Waiver of Surface Rights recorded under Clerk's File No. 2021-35457, Official Public Records, Midland County, Texas. (Does not affect the subject property)

10z. All terms, conditions and provisions of that certain Permanent Easement from Cumberland & Western Resources, LLC, a Wyoming limited liability company to Oncor Electric Delivery Company, LLC, a Delaware limited liability company, dated May 28, 2020, recorded under County Clerk's File No. 2020-21638, Official Public Records, Midland County, Texas. (Does not affect the subject property)

The Surveyor has not abstracted the record title and/or easements of the subject property. The Surveyor prepared this survey with the benefit of a title commitment described above and assumes no liability for any easements, right-of-way dedications or other title matters affecting the subject property which may have been filed in the real property records but are not disclosed in said title commitment.

SURVEYOR'S CERTIFICATION

This is to certify that this map or plat and the survey on which it is based were made in accordance with the 2021 Minimum Standard Detail Requirements for ALTA/NSPS Land Title Surveys, jointly established and adopted by ALTA and NSPS, and includes Items 1, 2, 3, 4, 7(a), 7(b)(1), 7(c), 8, 9, 13 and 14 of Table A thereof. The fieldwork was completed on 07/26/2024.

9/4/24

Leonard J. Lueker (*Original signature in red ink*)
Registered Professional Land Surveyor
Texas Registration No. 5714
l.lueker@winkelmann.com

Winkelmann & Associates, Inc.
6750 Hillcrest Plaza Drive, Suite 215
Dallas, Texas 75230
(972) 490-7090 www.winkelmann.com

STATE OF TEXAS
REGISTERED
LEONARD JAY LUEKER
5714
PROFESSIONAL
LAND SURVEYOR

Please note that the use of the word "certify" or "certification" in this document is the surveyor's professional opinion regarding those facts or findings which are the subject of this survey and does not constitute a warranty or guarantee, either expressed or implied.

No.	DATE	REVISION	APPROV

Winkelmann & Associates, Inc.
LAND SURVEYING CIVIL ENGINEERS & SURVEYORS
6750 HILLCREST PLAZA DRIVE, SUITE 215 DALLAS, TEXAS 75230 (972) 490-7090 FAX (972) 490-7099
Texas Surveyor Firm 100660-00 Expires 12/31/2024
Texas Engineer Registration No. 8519 Expires 12/31/2024
www.winkelmann.com

T&P RAILROAD CO. SURVEY, ABSTRACT NO. 378
CITY OF MIDLAND
MIDLAND COUNTY, TEXAS
COSTCO WHOLESALE CORPORATION
999 LAKE DRIVE
ISSAQUAH, WA 98027

ALTA/NSPS LAND TITLE SURVEY
22.119 ACRES

Date : 07.29.24
Scale : N/A
File : 58828.05-ALTA-3
Project No. : 58828.0B

SHEET 2 OF 2

G:\58828- Midland\0B\SURVEY\Boundary Survey\58828.0B-ALTA-3.dwg

MIDLAND
Planning Division

Annexation/Initial Zoning Application

Project Number: _____

Case Number: _____

Applicant *(if acting as Agent, see affidavit on page 2)* Printed Name: MICHAEL CLARK WINKELMANN & ASSOC		Phone (214) 801 7216 Email mclarke@winkelmann.com	
Address 6150 HILLCREST PLAZA #200	City DALLAS	State TX	Zip 75230

Property Owner CUMBERLAND & WESTERN RESOURCES, LLC Printed Name: C/O BETTERTON TYER & SUMMONTE, PL		Phone (941) 484 4442 Email greg@bettertonlaw.com	
Address 735 E. VENICE AVE #200	City VENICE	State FL	Zip 34285

Representative *(if different from Applicant or Property Owner)* Firm: COSTCO WHOLESALE Printed Name: JP ANDREWS		Phone (571) 228 7024 Email JPANDREWS@COSTCO.COM	
Address 45940 HORSESHOE DRIVE #150	City STERLING	State VA	Zip 20166

Street Address: SH 191 WEST OF HWY 158

Legal Description
Lot: Block: Subdivision:

Current Zoning: N/A	**Proposed Zone:** RR *(List by tracts if more than one district is requested)*

Reason for Annexation/Zone Change Request: ALLOW FOR DEVELOPMENT OF COSTCO WAREHOUSE & FUEL CENTER

Present Use of Property: VACANT

Proposed Use of Property: RETAIL (COSTCO)

How would this annexation/zone change affect the public health, safety and welfare?
NO ADVERSE IMPACT TO PUBLIC HEALTH, SAFETY, WELFARE

Describe how this annexation/zone change will affect adjacent properties:
THIS ANNEXATION & ZONING IS AN EXTENSION OF CURRENT ZONING & LAND USE ALONG SH 191

Submittal and Fees
Items to be submitted with this application form:
- *Application Fee – Payable to the 'City of Midland'*
- Dimensioned Site Plan
- Digital Copies of Site Plan (PDF/JPEG)

Signature *(by property owner only – authorized agent must sign affidavit below)*	
Applicant (signature):	Date: 8/6/24
Applicant (printed): MICHAEL CLARK	
Property Owner (signature): X Greg Betterton	Date: 8/6/24
Property Owner (printed): X Greg Betterton Manager	

The Annexation/Initial Zoning shall be considered officially received in the Planning office only when it has been submitted in full compliance with the provisions of Section 212 of the Texas Local Government Code and the Zoning Code of Ordinances of the City of Midland and when such required items for the application are also received.

All materials, including exhibits, submitted in support of an application, or displayed during a public hearing, shall remain the property of the City of Midland.

If an agent is authorized by the property owner to file and execute the application on behalf of the property owner, the agent must complete the affidavit below.

STATE OF TEXAS
COUNTY OF MIDLAND

Before me, the undersigned authority, on this day personally appeared Michael Clark who, being by me duly sworn, upon oath says: That (s)he is authorized by Greg Betterton, the owner of the above described property, to fully represent him/her in this application and that (s)he had the legal right, power and authority to sign said owner's name hereto as his/her attorney in fact.

Authorized Agent (*signature*)

Subscribed and sworn to before me, this 26 day of Aug, 2024, to certify which witness my hand and seal of office.

Chris Fountain

NOTARY PUBLIC, MIDLAND COUNTY, TEXAS

CHRIS FOUNTAIN
Notary Public
STATE OF TEXAS
ID# 4451970
My Comm. Exp. Nov. 22, 2024

FOR OFFICE USE ONLY	
☐ Property Owner Authorization	☐ Metes and Bounds (Sealed by Surveyor)
☐ Application Fee	☐ Files In Digital Format (PDF/JPEG)
Check #_____	☐ Petition
Received By:	Date:

****Application will not be considered for scheduling until reviewed by a planner.****

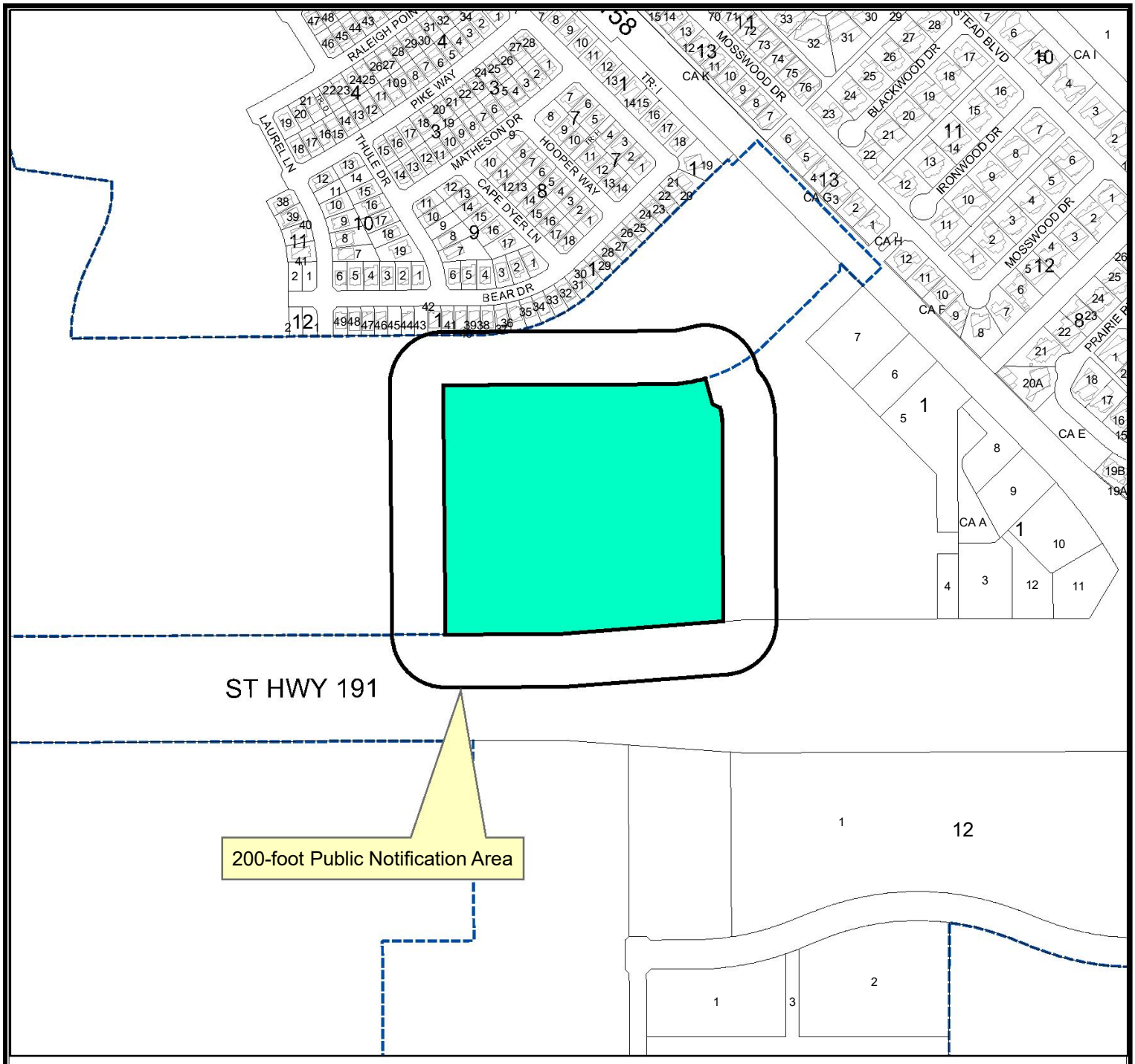

Location Map

Z-24-0388 **Scale: 1" = 537'**

Consider a request by Winkleman & Associates, Inc., on behalf of Costco Wholesale for an initial zoning of RR, Regional Retail District for a 22.119-acre tract of land out of the south part of Section 35, Block 40, T-1-S, T&P RR. Co Survey, Midland County, Texas.

Generally located on the north side of State Highway 191, approximately 1,550 feet west of West State Highway 158. (E19)

LEGEND

- CITY LIMITS
- PARCEL
- PRIVATE BLDGS

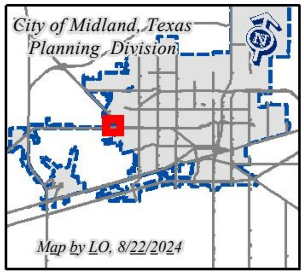

©THE CITY OF MIDLAND - 2021
THIS DATA IS NOT A SUBSTITUTION FOR A SURVEY AND IS NOT DESIGNED TO BE USED AS THE PRIMARY TOOL IN PERMITTING OR OTHER DECISIONS BASED SOLELY ON THE INFORMATION CONTAINED HEREIN.
THE CITY OF MIDLAND SHALL NOT BE RESPONSIBLE FOR ANY DECISIONS BASED UPON THE USE OF THIS DATA.

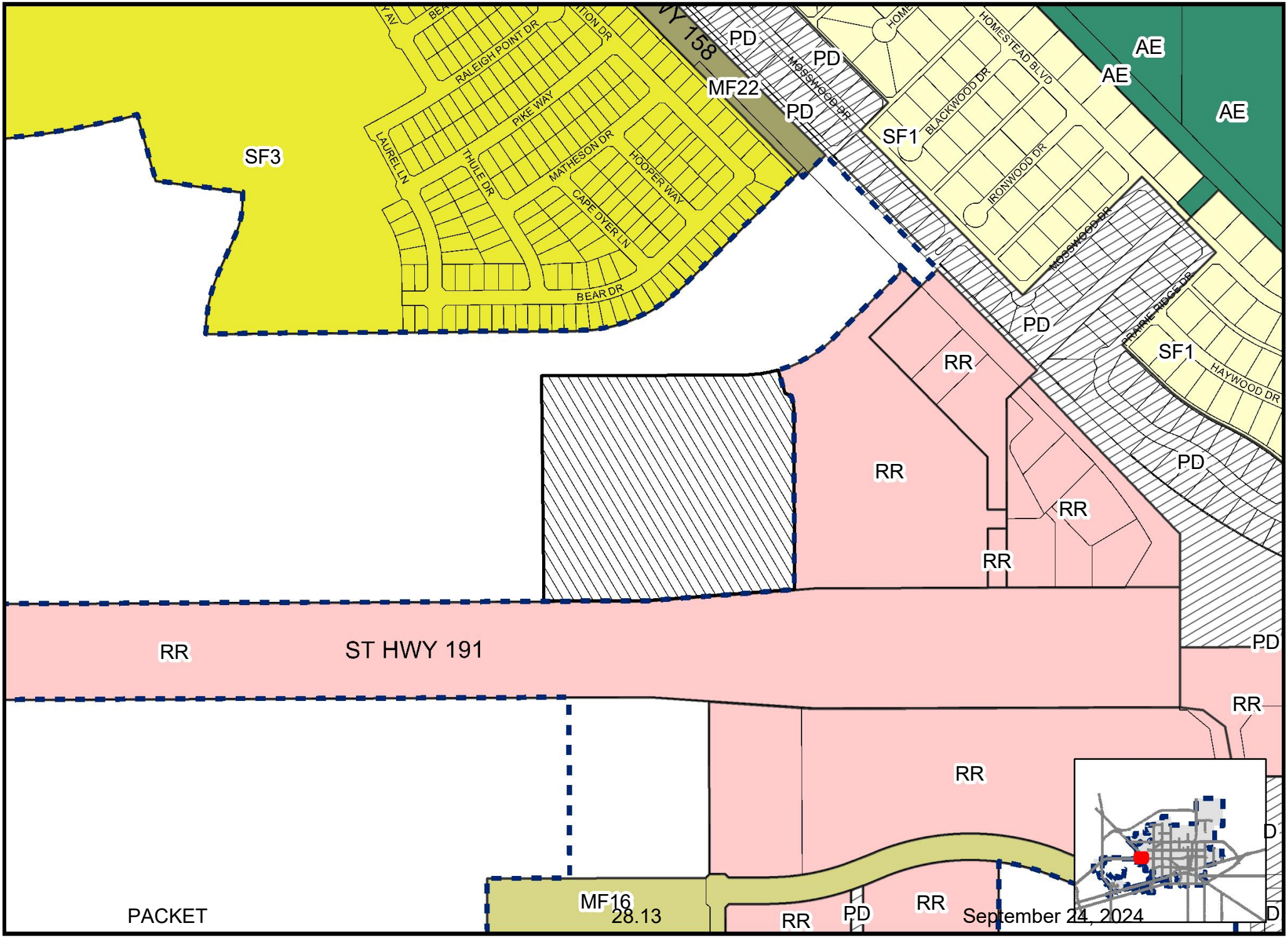

Map LO, 8/22/2024

Z-24-0388

Scale: 1" = 501'

ZONING MAP

© THE CITY OF MIDLAND - 2021: THIS DATA IS NOT A SUBSTITUTION FOR A SURVEY PRODUCT, NOR IS IT DESIGNED TO BE USED AS A PRIMARY TOOL IN PERMITTING OR OTHER DECISIONS BASED SOLELY ON THE INFORMATION CONTAINED HEREIN THE CITY OF MIDLAND SHALL NOT BE RESPONSIBLE FOR ANY DECISIONS BASED UPON THE USE OF THIS DATA

PETITION FOR ANNEXATION

Dear City of Midland:

As current owner of the tract(s) of land described in Exhibit(s) A (the "Property"), said Exhibit(s) being attached hereto and incorporated herein, CUMBERLAND AND WESTERN RESOURCES, LLC ("Owner") submits this petition for annexation and hereby requests that the Property be added to and annexed to the City of Midland.

Signature of Owner or Owner's Authorized Representative

GREG BETTERTON

Printed Name

MANAGER

Title

THE STATE OF FLORIDA §
§
COUNTY OF SARASOTA §

This instrument was acknowledged before me on the 5 day of SEPTEMBER 20 24, by GREG A. BETTERTON in the capacity herein stated.

PERSONALLY KNOWN TO ME

MY COMMISSION EXPIRES

Notary Public, State of FLORIDA

NOTARY PUBLIC STATE OF FLORIDA
ELISE J. DURANCEAU
Commission # HH 082709
Expires March 8, 2025
Bonded Thru Budget Notary Services

Exhibit A

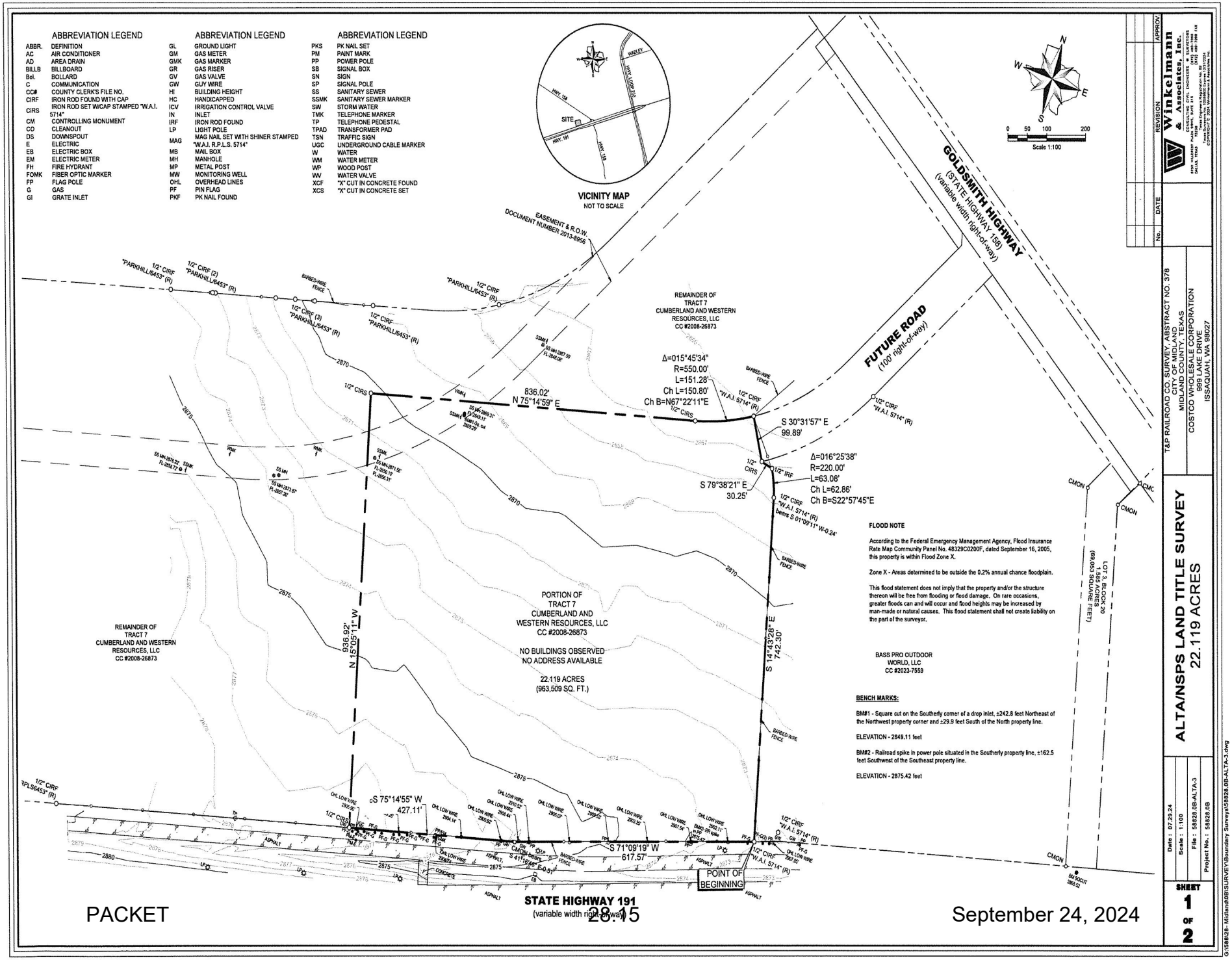

ABBREVIATION LEGEND
ABBR. DEFINITION
AC AIR CONDITIONER
AD AREA DRAIN
BILLB BILLBOARD
Bol. BOLLARD
C COMMUNICATION
CC# COUNTY CLERK'S FILE NO.
CIRF IRON ROD FOUND WITH CAP
CIRS IRON ROD SET W/CAP STAMPED "W.A.I. 5714"
CM CONTROLLING MONUMENT
CO CLEANOUT
DS DOWNSPOUT
E ELECTRIC
EB ELECTRIC BOX
EM ELECTRIC METER
FH FIRE HYDRANT
FOMK FIBER OPTIC MARKER
FP FLAG POLE
G GAS
GI GRATE INLET
GL GROUND LIGHT
GM GAS METER
GMK GAS MARKER
GR GAS RISER
GV GAS VALVE
GW GUY WIRE
HI BUILDING HEIGHT
HC HANDICAPPED
ICV IRRIGATION CONTROL VALVE
IN INLET
IRF IRON ROD FOUND
LP LIGHT POLE
MAG MAG NAIL SET WITH SHINER STAMPED "W.A.I. R.P.L.S. 5714"
MB MAIL BOX
MH MANHOLE
MP METAL POST
MW MONITORING WELL
OHL OVERHEAD LINES
PF PIN FLAG
PKF PK NAIL FOUND
PKS PK NAIL SET
PM PAINT MARK
PP POWER POLE
SB SIGNAL BOX
SN SIGN
SP SIGNAL POLE
SS SANITARY SEWER
SSMK SANITARY SEWER MARKER
SW STORM WATER
TMK TELEPHONE MARKER
TP TELEPHONE PEDESTAL
TPAD TRANSFORMER PAD
TSN TRAFFIC SIGN
UGC UNDERGROUND CABLE MARKER
W WATER
WM WATER METER
WP WOOD POST
WV WATER VALVE
XCF "X" CUT IN CONCRETE FOUND
XCS "X" CUT IN CONCRETE SET
VICINITY MAP
NOT TO SCALE
SITE
HWY. 158
HWY. 191
HWY. LOOP 250
HADLEY
Scale 1:100
GOLDSMITH HIGHWAY
(STATE HIGHWAY 158)
(variable width right-of-way)
FUTURE ROAD
(100' right-of-way)
EASEMENT & R.O.W.
DOCUMENT NUMBER 2013-8956
REMAINDER OF
TRACT 7
CUMBERLAND AND WESTERN
RESOURCES, LLC
CC #2008-26873
Δ=015°45'34"
R=550.00'
L=151.28'
Ch L=150.80'
Ch B=N67°22'11"E
836.02'
N 75°14'59" E
S 30°31'57" E
99.89'
Δ=016°25'38"
R=220.00'
L=63.08'
Ch L=62.86'
Ch B=S22°57'45"E
S 79°38'21" E
30.25'
PORTION OF
TRACT 7
CUMBERLAND AND
WESTERN RESOURCES, LLC
CC #2008-26873
NO BUILDINGS OBSERVED
NO ADDRESS AVAILABLE
22.119 ACRES
(963,509 SQ. FT.)
936.92'
N 15°05'11" W
S 14°43'28" E
742.30'
S 75°14'55" W
427.11'
S 71°09'19" W
617.57'
POINT OF
BEGINNING
STATE HIGHWAY 191
(variable width right-of-way)
LOT 3, BLOCK 20
1.585 ACRES
(69,053 SQUARE FEET)
FLOOD NOTE
According to the Federal Emergency Management Agency, Flood Insurance Rate Map Community Panel No. 48329C0200F, dated September 16, 2005, this property is within Flood Zone X.
Zone X - Areas determined to be outside the 0.2% annual chance floodplain.
This flood statement does not imply that the property and/or the structure thereon will be free from flooding or flood damage. On rare occasions, greater floods can and will occur and flood heights may be increased by man-made or natural causes. This flood statement shall not create liability on the part of the surveyor.
BASS PRO OUTDOOR
WORLD, LLC
CC #2023-7559
BENCH MARKS:
BM#1 - Square cut on the Southerly corner of a drop inlet, ±242.8 feet Northeast of the Northwest property corner and ±29.9 feet South of the North property line.
ELEVATION - 2849.11 feet
BM#2 - Railroad spike in power pole situated in the Southerly property line, ±162.5 feet Southwest of the Southeast property line.
ELEVATION - 2875.42 feet
Winkelmann & Associates, Inc.
T&P RAILROAD CO. SURVEY, ABSTRACT NO. 378
CITY OF MIDLAND
MIDLAND COUNTY, TEXAS
COSTCO WHOLESALE CORPORATION
999 LAKE DRIVE
ISSAQUAH, WA 98027
ALTA/NSPS LAND TITLE SURVEY
22.119 ACRES
Date : 07.29.24
Scale : 1:100
File : 58828.0B-ALTA-3
Project No. : 58828.0B
SHEET
1
OF
2

PROPERTY DESCRIPTION

STATE OF TEXAS §
COUNTY OF MIDLAND §

BEING a tract of land situated in the T&P RAILROAD CO. SURVEY, ABSTRACT NO. 378, City of Midland, Midland County, Texas and being a portion of a tract of land (Tract 7) as described in deed to Cumberland and Western Resources, LLC, recorded in County Clerk's File No. 2008-26873, Deed Records, Midland County, Texas, and being more particularly described as follows:

BEGINNING at a 1/2-inch iron rod with red plastic cap stamped "W.A.I. 5714" found for corner at the Southwesterly corner of a tract of land as described in deed to Bass Pro Outdoor World, LLC, recorded in County Clerk's File No. 2023-7559, Deed Records, Midland County, Texas, said iron rod being situated in the Northerly right-of-way line of State Highway 191 (variable width right-of-way);

THENCE South 71 deg 09 min 19 sec West, departing the Westerly line of said Bass Pro Outdoor World, LLC tract and along said Northerly right-of-way line, a distance of 617.57 feet to a point for corner from which a concrete monument found bears South 41 deg 16 min 46 sec East, a distance of 0.51 feet;

THENCE South 75 deg 14 min 55 sec West, continuing along said Northerly right-of-way line, a distance of 427.11 feet to a 1/2-inch iron rod with red plastic cap stamped "W.A.I. 5714" set for corner;

THENCE departing the Northerly right-of-way line of said State Highway 191 and over and across said Cumberland and Western Resources, LLC tract, the following:

North 15 deg 05 min 11 sec West, a distance of 936.92 feet to a 1/2-inch iron rod with red plastic cap stamped "W.A.I. 5714" set for corner;

North 75 deg 14 min 59 sec East, a distance of 836.02 feet to a 1/2-inch iron rod with red plastic cap stamped "W.A.I. 5714" set for corner and the beginning of a curve to the left having a radius of 550.00 feet, a central angle of 15 deg 45 min 34 sec, a chord bearing of North 67 deg 22 min 11 sec East and a chord length of 150.80 feet;

Along said curve to the left, an arc distance of 151.28 feet to a 1/2-inch iron rod with red plastic cap stamped "W.A.I. 5714" set for corner, said iron rod being at the terminus of a Future Road (100' right-of-way) and the most Northerly Northwest corner of said Bass Pro Outdoor World, LLC tract;

THENCE South 30 deg 31 min 57 sec East, along said terminus and the Westerly line of said Bass Pro Outdoor World, LLC tract, a distance of 99.89 feet to a 1/2-inch iron rod with red plastic cap stamped "W.A.I. 5714" set for corner;

THENCE South 79 deg 38 min 21 sec East, departing the terminus of said Future Road and continuing along said Westerly line, a distance of 30.25 feet to a 1/2-inch iron rod found for corner and the beginning of a non-tangent curve to the right having a radius of 220.00 feet, a central angle of 16 deg 25 min 38 sec, a chord bearing of South 22 deg 57 min 45 sec East and a chord length of 62.86 feet;

THENCE continuing along said Westerly line and along said non-tangent curve to the right, an arc distance of 63.08 feet to a point for corner from which a 1/2-inch iron rod with red plastic cap stamped "W.A.I. 5714" found bears South 01 deg 09 min 11 sec West, a distance of 0.24 feet;

THENCE South 14 deg 43 min 28 sec East, continuing along said Westerly line, a distance of 742.30 feet to the POINT OF BEGINNING.

CONTAINING within these metes and bounds 22.119 acres or 963,509 square feet of land, more or less.

Bearings shown hereon are based upon an on-the-ground Survey performed in the field on the 26th day of July, 2024, utilizing a G.P.S. bearing related to the Texas Coordinate System, Central Zone (4203), NAD 83, grid values from the GeoShack VRS network.

SCHEDULE "B" NOTES

Items corresponding to the Commitment for Title Insurance issued August 13, 2024 by First American Title Insurance Company bearing an effective date of July 26, 2024, GF# NCS-1227609-WA1.

1-10d. Intentionally omitted by Surveyor.

10e. All terms, conditions and provisions of that certain Right-of Way easement from Scharbauer Brothers & Co., a corporation to Colorado River Municipal Water District, dated January 06, 1959, recorded in Volume 308, Page 502, Official Public Records, Midland County, Texas. (Does not affect the subject property)

10f. All terms, conditions and provisions of that certain Right-of Way easement from Scharbauer Brothers & Co., a corporation to the State of Texas, dated September 16, 1959, recorded in Volume 334, Page 42, Official Public Records, Midland County, Texas. (Does not affect the subject property)

10g. All terms, conditions and provisions of that certain Right-of Way easement from Scharbauer Brothers & Co., a corporation to Texas Electric Service Company, dated April 13, 1960, recorded in Volume 337, Page 349, Official Public Records, Midland County, Texas. (Does not affect the subject property)

10h. All terms, conditions and provisions of that certain Right-of Way easement from Scharbauer Brothers & Co., a corporation to Texas Electric Service Company, dated September 21, 1961, recorded in Volume 372, Page 85, Official Public Records, Midland County, Texas. (Does not affect the subject property)

10i. All terms, conditions and provisions of that certain Right-of Way easement from Scharbauer Brothers & Co., a corporation to Pioneer Natural Gas Company, a Texas corporation, dated February 22, 1974, recorded in Volume 577, Page 693, Official Public Records, Midland County, Texas, (Affects the subject property, blanket)

10j-10l. Intentionally omitted by Surveyor.

10m. All terms, conditions and provisions of that certain Pipeline Easement Right-of Way from Spanish Trail Land & Cattle Co., LP to GRB Properties, Inc., General Partner for Stagg Investment I, Ltd., dated December 12, 2007, recorded in Volume 3083, Page 594, Official Public Records, Midland County, Texas. (Unable to plot, "Exhibit A", not included in the document)

10n. Intentionally omitted by Surveyor.

10o. Texas Local Government Code Development Agreement, recorded under County Clerk's File No. 2009-20614, Official Public Records, Midland County, Texas. (According to Section 5 of the provided document, the agreement appears to be expired)

10p. Intentionally omitted by Surveyor.

10q. All terms, conditions and provisions of that certain Water Pipeline Easement and Right-of Way easement from Cumberland & Western Resources, LLC, a Wyoming limited liability company to Midland County Fresh Water Supply District No. 1, dated August 22, 2012, recorded under County Clerk's File No. 2012-19430, Official Public Records, Midland County, Texas. (Does not affect the subject property)

10r. All terms, conditions and provisions of that certain Right-of Way easement from Cumberland & Western Resources, LLC, a Wyoming limited liability company to Midland County Fresh Water Supply District No. 1, dated April 23, 2013, recorded under County Clerk's File No. 2013-9942, Official Public Records, Midland County, Texas. (Does not affect the subject property)

10s. All terms, conditions and provisions of that certain Temporary Drainage Easement from Cumberland & Western Resources, LLC, a Wyoming limited liability company to City of Midland, dated June 05, 2013, recorded under County Clerk's File No. 2013-14110, Official Public Records, Midland County, Texas. (Unable to plot, "Exhibit A", not included in the document)

10t. All terms, conditions and provisions of that certain Water Pipeline and Right-of Way Easement from Cumberland & Western Resources, LLC, a Wyoming limited liability company to Midland County Fresh Water Supply District No. 1, dated June 13, 2012, recorded under County Clerk's File No. 2013-25259, Official Public Records, Midland County, Texas. (Does not affect the subject property)

10u. All terms, conditions and provisions of that certain Right-of Way Easement from Cumberland & Western Resources, LLC, a Wyoming limited liability company to Diamondback O&G LLC, dated October 15, 2015, recorded under County Clerk's File No. 2016-1532, Official Public Records, Midland County, Texas. (Does not affect the subject property)

10v. All terms, conditions and provisions of that certain Right-of Way Easement from Cumberland & Western Resources, LLC, a Wyoming limited liability company to Midland County Fresh Water Supply District No. 1, dated March 17, 2016, recorded under County Clerk's File No. 2016-23356, Official Public Records, Midland County, Texas. (Does not affect the subject property)

10w. All terms, conditions and provisions of that certain Right-of-Way Easement from Cumberland & Western Resources, LLC, a Wyoming limited liability company to Midland County Fresh Water Supply District No. 1, dated March 17, 2016, recorded under County Clerk's File No. 2016-23357, Official Public Records, Midland County, Texas. (Does not affect the subject property)

10x. All terms, conditions and provisions of that certain Right-of Way Easement from Cumberland & Western Resources, LLC, a Wyoming limited liability company to Diamondback E&P LLC, dated July 14, 2016, recorded under County Clerk's File No. 2016-30328, Official Public Records, Midland County, Texas. (Terms, conditions and provisions affect subject property, blanket; Unable to plot well locations, "Exhibit A", not included in the document)

10y. Service Agreement recorded under Clerk's File No. 2019-38533, Official Public Records, Midland County, Texas. (Does not affect the subject property). Certification recorded under Clerk's File No. 2020-7177, Official Public Records, Midland County, Texas. (Does not affect the subject property). Service Agreement recorded under Clerk's File No. 2020-9194, Official Public Records, Midland County, Texas. (Does not affect the subject property). Service Agreement recorded under Clerk's File No. 2021-18279, Official Public Records, Midland County, Texas. (Does not affect the subject property). Waiver of Surface Rights recorded under Clerk's File No. 2021-35457, Official Public Records, Midland County, Texas. (Does not affect the subject property)

10z. All terms, conditions and provisions of that certain Permanent Easement from Cumberland & Western Resources, LLC, a Wyoming limited liability company to Oncor Electric Delivery Company, LLC, a Delaware limited liability company, dated May 28, 2020, recorded under County Clerk's File No. 2020-21638, Official Public Records, Midland County, Texas. (Does not affect the subject property)

The Surveyor has not abstracted the record title and/or easements of the subject property. The Surveyor prepared this survey with the benefit of a title commitment described above and assumes no liability for any easements, right-of-way dedications or other title matters affecting the subject property which may have been filed in the real property records but are not disclosed in said title commitment.

SURVEYOR'S CERTIFICATION

This is to certify that this map or plat and the survey on which it is based were made in accordance with the 2021 Minimum Standard Detail Requirements for ALTA/NSPS Land Title Surveys, jointly established and adopted by ALTA and NSPS, and includes Items 1, 2, 3, 4, 7(a), 7(b)(1), 7(c), 8, 9, 13 and 14 of Table A thereof. The fieldwork was completed on 07/26/2024.

9/4/24

Leonard J. Lueker (*Original signature in red ink*)
Registered Professional Land Surveyor
Texas Registration No. 5714
l.lueker@winkelmann.com

Winkelmann & Associates, Inc.
6750 Hillcrest Plaza Drive, Suite 215
Dallas, Texas 75230
(972) 490-7090 www.winkelmann.com

STATE OF TEXAS
REGISTERED
LEONARD JAY LUEKER
5714
PROFESSIONAL
LAND SURVEYOR

Please note that the use of the word "certify" or "certification" in this document is the surveyor's professional opinion regarding those facts or findings which are the subject of this survey and does not constitute a warranty or guarantee, either expressed or implied.

No.	DATE	REVISION	APPROV

Winkelmann & Associates, Inc.
CONSULTING CIVIL ENGINEERS & SURVEYORS
6750 HILLCREST PLAZA DRIVE, SUITE 215 DALLAS, TEXAS 75230 (972) 490-7090 FAX
Texas Engineer Registration No. F-9 (972) 490-7099 FAX
Texas Surveyor Firm 100660-00 Expires 12/31/2024
Dallas@winkelmann.com www.winkelmann.com

T&P RAILROAD CO. SURVEY, ABSTRACT NO. 378
CITY OF MIDLAND
MIDLAND COUNTY, TEXAS
COSTCO WHOLESALE CORPORATION
999 LAKE DRIVE
ISSAQUAH, WA 98027

ALTA/NSPS LAND TITLE SURVEY
22.119 ACRES

Date : 07.29.24
Scale : N/A
File : 58828.05-ALTA-3
Project No. : 58828.0B

SHEET 2 OF 2

G:\58828- Midland\0B\SURVEY\Boundary Survey\58828.0B-ALTA-3.dwg


LAUREL LN
THULE DR
MATHESON DR
HOOPER WAY
CAPE DYER LN
BEAR DR
IRONWOOD DR
MOSSWOOD DR
ST HWY 191




MIDLAND
Be the Energy!
COSTCO WHOLESALE
INITIAL ZONING
September 24, 2024
Visit Our Website
MIDLANDTEXAS.GOV

Costco Wholesale

- Property Owner: Cumberland & Western Resources, LLC
- Applicant: Michael Clark with Winkelmann & Associates (acting on property owners' behalf)]
- Representative: Costco Wholesale
- Initial Zoning
- Location: North of Highway 191 (ETJ)
- Reason for Request: For the development of a retail store known as Costco Wholesale

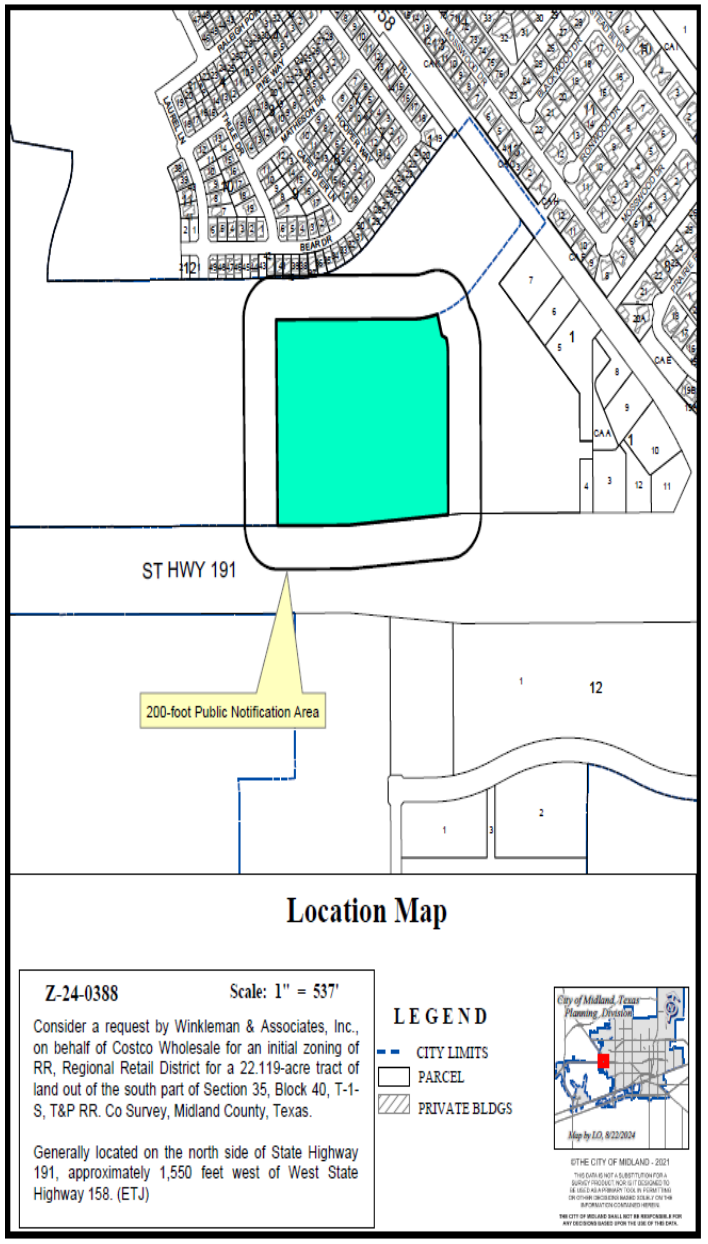

Costco Wholesale

- Current Zoning: ETJ, Extraterritorial Jurisdiction
- Surrounding Zoning:
  - North: ETJ, Extraterritorial Jurisdiction
  - South & East: RR, Regional Retail District
  - West: ETJ, Extraterritorial Jurisdiction
- Proposed Zoning: RR, Regional Retail District

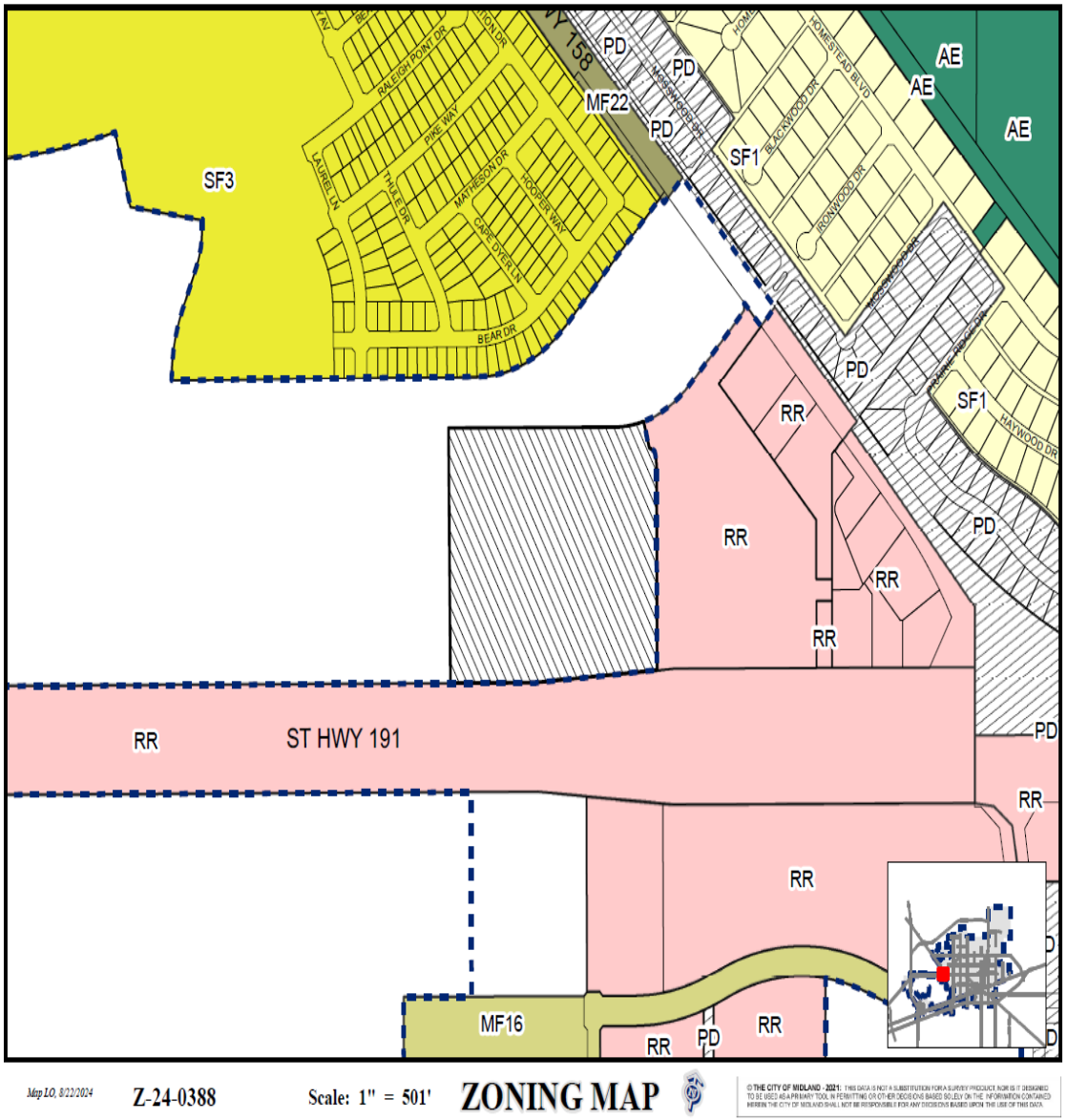

Costco Wholesale

- Current Use of the Property: Vacant
- Proposed Use of the Property: Retail Store & Gasoline Fueling Station
- Surrounding Uses:
  - North: vacant
  - South: Highway 191
  - East: vacant
  - West: vacant

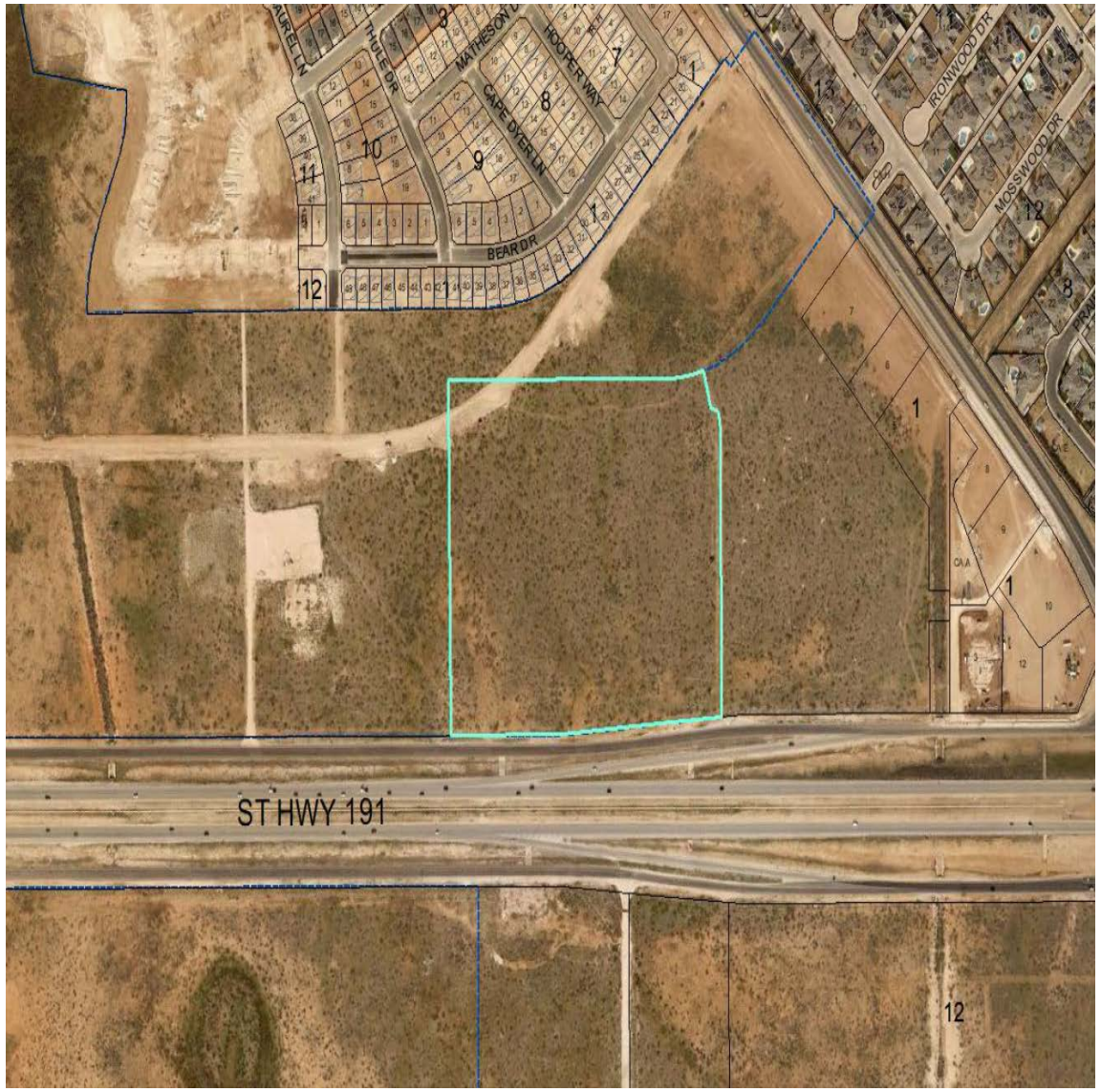



On Highway 191, Looking North

- TCT Land Use Designation: Urban-High (U-H)
- Supported Uses:
  - Supports a mix of complementary uses.
- Request is compatible with the surrounding area and the Tall City Tomorrow Plan.

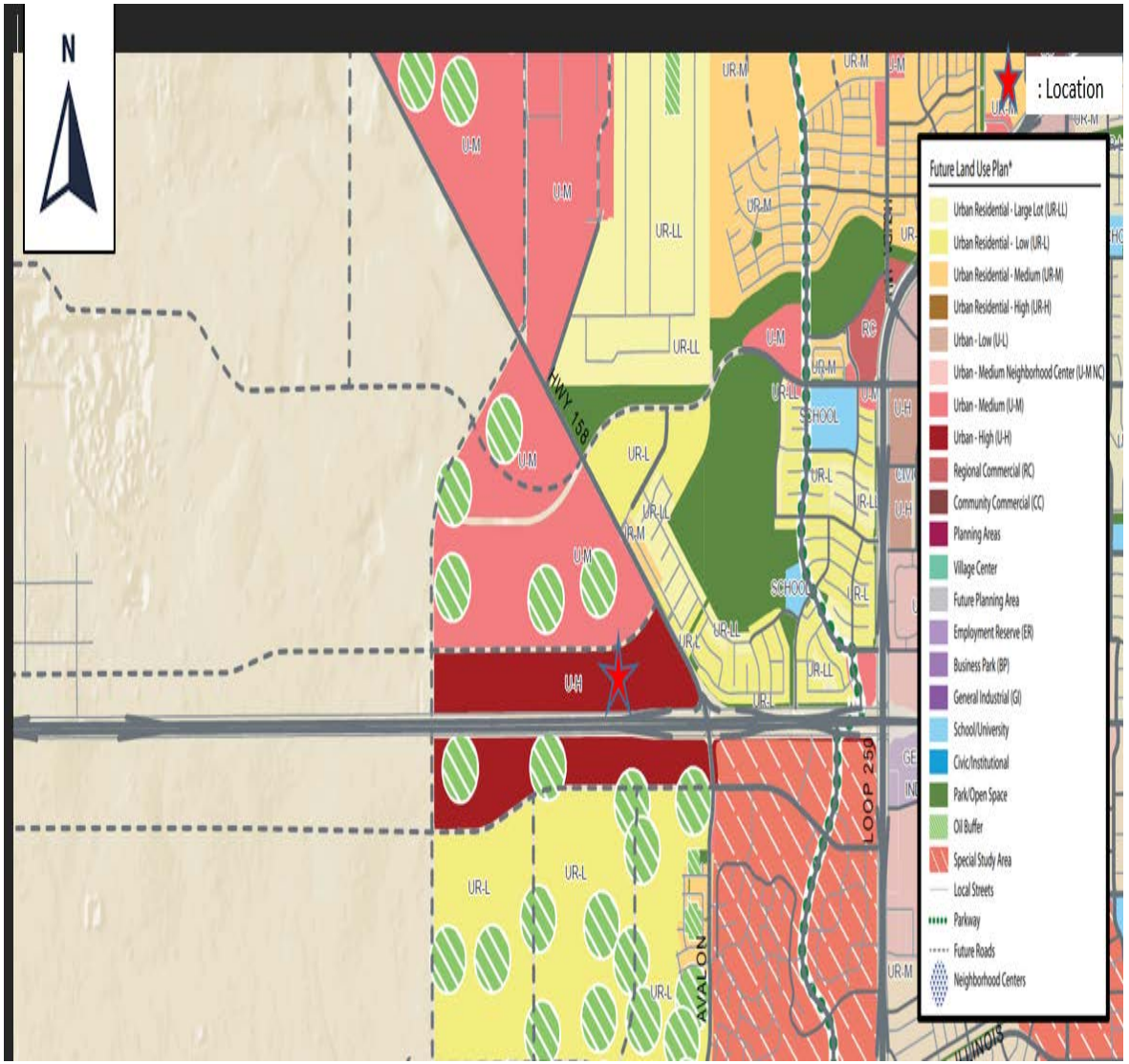

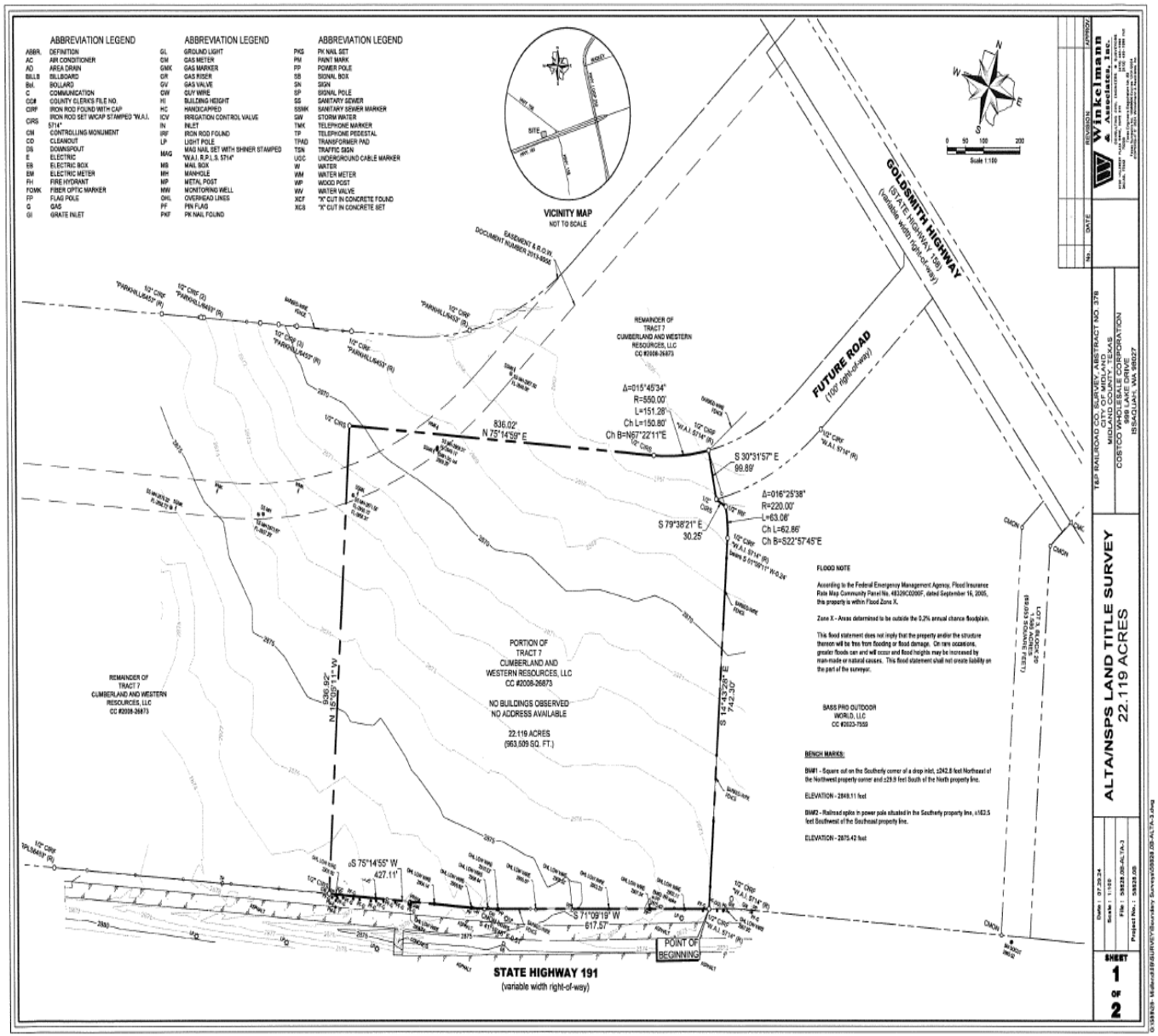

MIDLAND Be the Energy!

- No objections received.
- The Planning & Zoning Commission recommended approval of this September 3, 2024.
- Staff recommends APPROVAL of this initial zoning of RR, Regional Retail District.

MISSION

Deliver exceptional services and promote a high quality of life and place for ALL our citizens.



Date: September 24, 2024

To: The Honorable Mayor Blong and Council

From: Vanessa Magallanes, Chief Deputy City Secretary

Subject: Boards and Commissions Annual Recruitment

Dear Council, included with this memo are the applications received for the Boards and Commissions Annual Recruitment, a spreadsheet of the names of the applicants and what board they applied to, attendance records, and the Main Board list for your review to make appointments at the September 24th City Council meeting.

Airport Planning & Development Board:

1 – Re-appointment (Dave Joyner)

Animal Control Advisory Commission:

3 – Vacancies (Jensen (Veterinarian), Sport & Hotchkiss)

Barbara & George H.W. Bush Convention Center Advisory Board:

1 – Vacancy (Nelson)

Building & Fire Code Review Committee/Construction Board of Adjustments & Appeals:

6 – Re-Appointments (Ryan Almand, Jay Bradford, T.J. McClure, Laurence Oeth, Gary Glasscock, Robert Anderson)

Capital Improvement Advisory Committee:

1 – Vacancy (Kohler)

Citizens Development & Hotel/Motel Advisory Board:

2 – Vacancies (Ofield & Harrison)

1 – Re-appointment (Ankur Bhakta)

Midland Housing Authority Commission:

1 – Re-appointment (Wes Gotcher)

Midland-Odessa Urban Transit District Board:

1 – Vacancy (Corrales)

2 – Re-appointments (Don "Woody" Woodward & Robert Crites)

Midland Spaceport Development Corporation:

1 – Vacancy (Tryson)

Oil & Gas Advisory Commission:

1 – Vacancy (Bullock)

1 – Re-appointment (Cameron Willmann)

Parks & Recreation Commission:

2 – Vacancies (Howard & Smith)

Zoning Board of Adjustment & Airport Zoning Board of Adjustment:

2 – Vacancies (Claybrook & Gerety)

4 – Alternate Vacancies

I would like to see if you all would like to appoint someone from Council as the Council Liaison that Councilman Corrales was a part of:

Animal Control Advisory Commission

Building & Fire Code Review Committee/Construction Board of Adjustments & Appeals

Zoning Board of Adjustment & Airport Zoning Board of Adjustment

BOARDS AND COMMISSIONS OF THE CITY OF MIDLAND

September 24, 2024

AIRPORT PLANNING AND DEVELOPMENT BOARD

(Advisory)
(Membership-10; Terms - 3 Years expiring 3-3-4.)

	Appt Date	Term Expires	Eligibility Expires
Dave Joyner	10/21	Sept 30 2024	Sept 30 2027
Justin Kuethe	09/19	Sept 30 2025	Sept 30 2025
Nick McClure	09/19	Sept 30 2025	Sept 30 2025
James Linderman	04/22	Sept 30 2025	Sept 30 2028
Frank Kisner	09/22	Sept 30 2025	Sept 30 2028
Brandon Patterson	09/22	Sept 30 2025	Sept 30 2028
Gena Linebarger	09/20	Sept 30 2026	Sept 30 2026
Benjamin Fietz	09/20	Sept 30 2026	Sept 30 2026
John Echols	09/23	Sept 30 2026	Sept 30 2029
Samuel Jolliffe V	09/23	Sept 30 2026	Sept 30 2029

Justine Ruff (Liaison)
Robin Poole (Council Liaison)

Ex-Officio members are Earl Erdman and Harry Spannaus, the City Manager and the City Attorney. The Secretary is the Director of Aviation.

Eligibility Requirements: Resident of Midland County

ANIMAL CONTROL ADVISORY COMMISSION

(Advisory)
(Membership - 7; Terms - 4 Years)

	Appt Date	Term Expires	Eligibility Expires
Melissa Griffin-Hobson (daily operations)	08/23	Sept 30 2025	Does Not Expire
VACANT (Jensen (Veterinarian))	04/20	Sept 30 2024	Does Not Expire
VACANT (Sport)	04/20	Sept 30 2024	Sept 30 2028
VACANT (Hotchkiss)	04/20	Sept 30 2024	Sept 30 2028
Dianne Anderson (County)	11/23	Sept 30 2027	Does Not Expire
Alyson Dial	09/18	Sept 30 2026	Sept 30 2026
Beth Meeks	09/22	Sept 30 2026	Sept 30 2030

Melissa Griffin-Hobson (Staff Liaison)
Dan Corrales (Council Liaison)

Eligibility Requirements: 1 License Veterinarian, 1 Animal Shelter Employee, 1 Animal Welfare Organization Representative, 1 County or Municipal Official, 3 Citizens

BARBARA AND GEORGE H.W. BUSH CONVENTION CENTER ADVISORY BOARD

(Advisory)

(Membership-7; City Appoints 4 Seats; Terms – 3 Years - Staggered)

	Appt Date	Term Expires	Eligibility Expires
VACANT (Nelson)	09/23	Sept 30 2024	Sept 30 2027
Randall Milloy	09/23	Sept 30 2025	Sept 30 2028
Tucker Schneemann	09/23	Sept 30 2025	Sept 30 2028
Dillon Custer	09/23	Sept 30 2026	Sept 30 2029

Robin Poole (Council Liaison)

Non-voting Ex-Officio member is the City Governance Officer/City Secretary.

BUILDING AND FIRE CODE REVIEW COMMITTEE/CONSTRUCTION BOARD OF ADJUSTMENTS & APPEALS

(Decision Making)

(Membership – 9; Terms – 6 Years)

Shall consist of two architects, a fire protection contractor or specialist, a general contractor, an electrical contractor, a homebuilder, a plumbing and mechanical contractor, a structural engineer, a City Council Liaison

	Appt Date	Term Expires	Eligibility Expires
Ryan Almand (Electrical Contractor)	12/18	Sept 30 2024	Sept 30 2030
Jay Bradford (Architect)	12/18	Sept 30 2024	Sept 30 2030
T.J. McClure (Architect)	12/18	Sept 30 2024	Sept 30 2030
Laurence Oeth (Structural Engineer)	12/18	Sept 30 2024	Sept 30 2030
Gary Glasscock (General Contractor)	12/18	Sept 30 2024	Sept 30 2030
Robert Anderson (Homebuilder)	12/18	Sept 30 2024	Sept 30 2030
Dean Kelly (Plumbing & Mechanical Contractor)	04/22	Sept 30 2028	Sept 30 2034
Kenneth Whiting (Fire Protection)	04/22	Sept 30 2028	Sept 30 2034
Jeff Pinkstaff (Liaison)	12/18	Sept 30 2024	Sept 30 2030
Dan Corrales (Council Liaison)			

Eligibility Requirements: Members shall reside within the City.

CAPITAL IMPROVEMENT ADVISORY COMMITTEE

(Advisory)
(Membership – 7)
A minimum of 40% must be representative of real estate, development, or building industries who are not employees or officials of a political subdivision or governmental entity.)

	Appt Date
Carl Craigo	10/19
Walter Pate	06/18
Mark Payne	06/18
Brian Sales	06/18
VACANT (Koehler)	09/23
Gabriel McClelland (Staff Liaison)	09/23
Bill Scott	09/22
Robin Poole (Council Liaison)	

CITIZENS DEVELOPMENT AND HOTEL/MOTEL ADVISORY BOARD

(Advisory)
(Membership - 7; Terms - 2 Years Staggered)

	Appt Date	Term Expires	Eligibility Expires
Brandon Ofield	09/20	Sept 30 2024	Sept 30 2024
Ankur Bhakta	09/22	Sept 30 2024	Sept 30 2026
VACANT (Harrison)	09/22	Sept 30 2024	Sept 30 2026
Clint Williamson	04/21*	Sept 30 2025	Sept 30 2025
Heather Bredimus	09/23	Sept 30 2025	Sept 30 2027
Shonna Garcia	03/24*	Sept 30 2025	Sept 30 2029
Charles Harrington	04/24*	Sept 30 2025	Sept 30 2029

Marcia Bentley-German (Staff Liaison)
Robin Poole (Council Liaison)
John Norman (Council Liaison)

Eligibility Requirements: Members shall be thoroughly familiar with Chapter 351, “Municipal Hotel Occupancy Taxes”, 1 Member Representative of Hotel/Motel Association.

MIDLAND CENTRAL APPRAISAL DISTRICT BOARD OF DIRECTORS

(Separate Legal Entity)
Five Directors, Elected by Local Taxing Entities.
City Nominates/Cast Vote for one Director
(Terms - 2 Years)

	Appt Date	Term Expires
Robert McNaughton	11/15	Dec 31 2026

* **Indicates appointment to an unexpired term.**

MIDLAND DEVELOPMENT CORPORATION

(Decision Making/Separate Legal Entity)
(Membership - 7; Terms -3 Years - Staggered)

	Appt Date	Term Expires	Eligibility Expires
Chase Gardaphe	01/19	Jan 14 2025	Jan 14 2025
Barry Simpson	01/19	Jan 14 2025	Jan 14 2025
Brad Bullock	04/21*	Jan 14 2026	Jan 14 2029
P Lourcey Sams	04/20*	Jan 14 2026	Jan 14 2026
Jill Pennington	04/20*	Jan 14 2026	Jan 14 2026
Zachary Deck	01/23	Jan 14 2026	Jan 14 2029
Elvie Brown	10/23*	Jan 14 2025	Jan 14 2030

Vanessa Magallanes (Staff Liaison)
Amy Stretcher-Burkes (Council Liaison)
Lori Blong – Mayor (Council Liaison)

Eligibility Requirements: No director or employee shall be related to a current City Council member.

MIDLAND DOWNTOWN PARK CONSERVANCY BOARD

(Separate Legal Entity)
(Membership - 7; City Appoints 3 Seats; Terms -3 Years - Staggered)
(Resolution of appointment is made each February and each appointment must be ratified by the Conservancy Board in March at their annual meeting)

	Appt Date	Term Expires	Eligibility Expires
Traci Proctor	02/24	Sep 30 2027	Sep 30 2030
Sharla Hotchkiss	07/20*	Sep 30 2025	Sep 30 2028
Elvie Brown	02/23	Sep 30 2026	Sep 30 2029

MIDLAND HIGHER EDUCATION FACILITIES CORPORATION

(Membership - 7; Terms - 2 Years Staggered)

	Appt Date	Term Expires	Eligibility Expires
Steve Jones	**09/08***	**Jan 1 2010**	**Jan 1 2012**
Cathy Oestmann	**11/05***	**Jan 1 2010**	**Jan 1 2010**
Vacancy		**Jan 1 2007**	
Vacancy		**Jan 1 2007**	
Vacancy		**Jan 1 2007**	
Vacancy		**Jan 1 2009**	
Curt Kamradt	**11/05***	**Jan 1 2014**	**Jan 1 2014**

Sharla Hotchkiss (Liaison)

MIDLAND HOUSING AUTHORITY COMMISSION

(Separate Legal Entity)
(Membership - 5; Terms - 2 Years expiring 3 even & 2 odd.)
Appointments Made by Mayor (LGC 392.031)

	Appt Date	Term Expires
Wes Gotcher	09/20	Oct 2024
Latoya Mayberry	06/21	Oct 2025
Cheryl Wadley (Resident Commissioner)	11/19	Oct 2025
Michelle Evans	10/23	Oct 2025
Neville Peyton	10/23	Oct 2025

Isaac Garnett (Staff Liaison)

Eligibility Requirements: No member may be an officer or employee of the City of Midland.

MIDLAND-ODESSA URBAN TRANSIT DISTRICT BOARD

(Decision Making/Separate Legal Entity)
(Membership – 12 with 6 appointed by Midland; Terms - 2 Years Staggered; Can serve 3 terms)

	Appt Date	Term Expires	Eligibility Expires
Don “Woody” Woodward	09/22	Sept 30 2024	Sept 30 2028
VACANT (Corrales)	09/22	Sept 30 2024	Sept 30 2028
Robert Crites	10/22	Sept 30 2024	Sept 30 2028
Joseph Sanchez	12/19*	Sept 30 2027	Sept 30 2027
Daniel Norwood	04/21*	Sept 30 2029	Sept 30 2029
Brian Stubbs	06/22	Sept 30 2024	Sept 30 2028

Taha Sakrani (Staff Liaison)

MIDLAND SPACEPORT DEVELOPMENT CORPORATION

(Decision Making)
(Membership – 7 with 4 appointed by City of Midland & 3 by Midland County; 2 Year-Terms)

	Appt Date	Term Expires
Frank Kisner (City)	04/23	Sept 30 2025
Stephen Lowery (County)	02/24*	Sept 30 2025
Frank Tarzian (County)	02/24*	Sept 30 2025
Ed Anderson (County)	04/23	Sept 30 2025
John Trischitti III (City)	11/23	Sept 30 2025
Claudius Sanchez Czyzewska (City)	11/23	Sept 30 2025
VACANT (Tryson) (City)	11/23	Sept 30 2025

Justine Ruff (Staff Liaison)

OIL AND GAS ADVISORY COMMITTEE

(Advisory)
(Membership – 5; Terms – 3 Years expiring 2-2-1)
2 real property developer, real estate sales, or developer; 3 Lic. petroleum engineer, engineer w/ bachelor, or geologist

	Appt Date	Term Expires	Eligibility Expires
VACANT (Bullock) (Petroleum Eng.)	09/21	Sept 30 2024	Sept 30 2027
Cameron Willmann (Real Estate)	10/21*	Sept 30 2024	Sept 30 2027
Scott Bowden (Real Estate)	10/19	Sept 30 2025	Sept 30 2025
Ross Klabon (Petroleum Eng.)	10/19	Sept 30 2025	Sept 30 2025
Layton Hargesheimer	10/23	Sept 30 2026	Sept 30 2029

Ron Jenkins (Staff Liaison)

Eligibility Requirements: 3 Petroleum Engineers or Geologists and 2 with Property Development or Real Estate Experience.

PARKS AND RECREATION COMMISSION

(Advisory)
(Membership - 9; Terms - 3 Years expiring 3-3-3.)

	Appt Date	Term Expires	Eligibility Expires
VACANT (Howard)	02/16*	Sept 30 2024	Sept 30 2024
VACANT (Smith)	10/19	Sept 30 2025	Sept 30 2025
Amber Voithorer	09/22	Sept 30 2025	Sept 30 2028
Rachel Overman	09/22	Sept 30 2025	Sept 30 2028
Sarah Judge	09/22	Sept 30 2025	Sept 30 2028
Lynn Rogers	09/22	Sept 30 2025	Sept 30 2028
Susannah Prucka	04/20*	Sept 30 2026	Sept 30 2026
Dal Watson	09/20	Sept 30 2026	Sept 30 2026
Andra Jones	09/23	Sept 30 2026	Sept 30 2029

Laurie Williams (Staff Liaison)
John Norman (Council Liaison)

Eligibility Requirements: Resident Citizen, Taxpayer and Qualified Voter.

PERMIAN BASIN COMMUNITY CENTER FOR MH/MR (PermiaCare)

(Separate Legal Entity)
(Membership 9 - 2 (City); Terms - 2 Years)

	Appt Date	Term Expires
Derek Cook (City)	06/21	June 2025
Mickey Cargile (City)*	09/23	June 2025

* **Indicates appointment to an unexpired term.**

PERSONNEL BOARD OF APPEALS

(Decision Making)
(Membership - 3; No designated terms. Mayor appoints.)

	Appt. Date
Scott Dufford	01/14
Hugh A. “Andy” Shaffer	09/05
Lori Blong	01/23

Mark Widman (Staff Liaison)

Eligibility Requirements: Board consists of two City Council members and one other member who is not a City employee.

PLANNING AND ZONING COMMISSION

(Decision Making)
(Membership - 7; Terms - 3 Years)

	Appt Date	Term Expires	Eligibility Expires
Adrian Carrasco	09/21	Sept 30 2024	Sept 30 2027
Emily Holeva	09/22	Sept 30 2025	Sept 30 2028
Abraham Bejil	09/22	Sept 30 2025	Sept 30 2028
Steven Villela	05/23*	Sept 30 2026	Sept 30 2029
Lucy Sisniega	09/20	Sept 30 2026	Sept 30 2026
John Burkholder	10/23	Sept 30 2026	Sept 30 2029
Brennan Berry	10/23	Sept 30 2026	Sept 30 2029
ALTERNATES:			
Joshua Sparks	10/23	Sept 30 2026	Sept 30 2029
Dara Richardson	04/24*	Sept 30 2025	Sept 30 2031

Landon Ochoa (Staff Liaison)

Eligibility Requirements: Resident citizen of City of Midland, owner of real property within the City Limits and qualified Voter.

ZONING BOARD OF ADJUSTMENT
AND
AIRPORT ZONING BOARD OF ADJUSTMENT

(Decision Making)
(Membership - 5; Terms - 2 Years expiring 3 odd & 2 even.)

	Appt Date	Term Expires	Eligibility Expires
(VACANT) Claybrook	03/19*	Sept 30 2024	Sept 30 2024
(VACANT) Gerety	10/22	Sept 30 2024	Sept 30 2026
Rachel Walker	10/23	Sept 30 2025	Sept 30 2027
Elizabeth Moore	10/23	Sept 30 2025	Sept 30 2027
Robert Gray	01/21*	Sept 30 2027	Sept 30 2027

ALTERNATES: (not applicable to Airport Zoning)

VACANT (Schumann)	Sept 30 2025
VACANCY	**Sept 30 2020**
VACANCY	**Sept 30 2020**
VACANCY	**Sept 30 2020**

Jeff Pinkstaff (Staff Liaison)

****Updated: September 18, 2024****

* **Indicates appointment to an unexpired term.**

Boards & Commissions Applicant Recommendations

Airport Planning & Development Board: (1 Re-Appointment)

Re-Appt. Dave Joyner

Animal Control Advisory Commission: (3 Vacancies)

1. Lisa Kay Vandenberg
2. Devyn Daley
3. Shelly Haney

Barbara & George H.W. Bush Convention Center Advisory Board: (1 Vacancy)

Tim Jakel Jr.
Brandon Ofield
Sherri Allen

Capital Improvement Advisory Committee: (1 Vacancy)

Joshua Ferguson

Building & Fire Code Review Committee/Construction Board of Adjustments & Appeals:

(6 Re-Appointments)

Re-Appt. Ray Almand
Re-Appt. Jay Bradford
Re-Appt. T.J. McClure
Re-Appt. Laurence Oeth
Re-Appt. Gary Glasscock

Citizens Development Hotel/Motel Advisory Board: (2 Vacancies & 1 Re-Appointment)

1. Michael Dietrich
2. Roy Geer
3. Joy Maraio
Re-Appt. Ankur Bhakta

Midland Housing Authority Commission: (1 Re-Appointment)

Re-Appt. Wes Gotcher

Midland-Odessa Urban Transit District Board: (1 Vacancy & 2 Re-Appointments)

Lindsey Adams
Re-Appt. Don "Woody" Woodward
Re-Appt. Robert Crites
Re-Appt. Brian Stubbs

Midland Spaceport Development Corporation: (1 Vacancy)

Oil & Gas Advisory Committee: (1 Vacancy & 1 Re-Appointment)

Vincent Doczy
Nick Stowers
Re-Appt. Cameron Willmann

Parks & Recreation Commission: (2 Vacancies)

Wes Turner
Matthew Wilson

Zoning Board of Adjustment & Airport Zoning Board of Adjustment:

(2 Vacancies & 4 Alternate Vacancies)

Brentley LaFoy

SPREADSHEET LIST OF APPLICANTS AND BOARD/COMMISSION APPLIED FOR:

Airport Planning & Development Board	**Animal Control Advisory Commission**	**Barbara & George H.W. Bush Convention Center**	**Capital Improvement Advisory Committee**	**Building & Fire Code Review Committee**	**Citizens Development & Hotel/Motel Advisory Board**	**Midland Downtown Park Conservancy Board**	**Midland Housing Authority Commission**
1 – Re-appointment	3 – Vacancies	1 – Vacancy	1 – Vacancy	6 – Re-appointments	2 – Vacancies 1 – Re-appointment	NO VACANCIES	1 – Re-appointment
JoyK. Bryan Reeves	Devyn Daley	Brandon Ofield	Joshua Ferguson		Timothy Clifton	Chip Hight	Sheldon Kinnison
Brandon Ofield	Amanda Herd	Tim Jakel Jr.			Michael Dietrich		Gina Martin
Wesley Arrambide	Camille Bryant	Sherri Allen			Joy Maraio		
Rob Roy McDonald	Betsy Brininstool				Kelly Stout		
David Tryson	Marion Bryant				Tim Jakel Jr.		
Michael Dietrich	Sam Harrill				Daniel Garcia		
Gary Gray	Alexis Gibson				Roy Geer		
Steve Price	Shelly Haney						
Tom Segulja	Erin Drake						
Sherri Allen	Kelly Stout			Re-appointments:			
Matthew Wilson	Brandy Walkup			Ryan Almand			
Alan White	Daniel Norwood			Jay Bradford			
	MyRon McGee			T.J. McClure			
Re-appointment:	Lisa Vandenberg			Laurence Oeth	Re-appointments:		Re-appointment:
Dave Joyner				Gary Glasscock	Ankur Bhakta		Wes Gotcher
				Robert Anderson			

SPREADSHEET LIST OF APPLICANTS AND BOARD/COMMISSION APPLIED FOR:

Midland-Odessa Urban Transit District Board	**Midland Spaceport Development Corporation**	**Oil & Gas Advisory Committee**	**Parks & Recreation Commission**	**Permian Basin Community Center for MH/MR PermiaCare**	**Zoning Board of Adjustment & Airport Zoning Board of Adjustment**	
1 – Vacancy 2 – Re-appointments	1 – Vacancy	1 – Vacancy 1 – Re-appointment	2 - Vacancies	NO VACANCIES	2 – Vacancies 4 – Alternate Vacancies	
Dalia Salinas-Tejeda	MyRon McGee	Justin Dolan	Dustin Johnson	Marion Bryant	Brentley LaFoy	
Bryan Ball		Vincent Doczy	Marion Bryant	Gina Martin		
Daniel Garcia		Michael Dietrich	Vincent Doczy			
Lindsey Adams		Damon Button	Brittany Halbert			
		Nick Stowers	Joy Paulson			
			Daniel Norwood			
			Max Kilgore			
			Weston Turner			
			Matthew Wilson			
			MyRon McGee			
Re-appointments:		Re-appointment:				
Don Woodward		Cameron Willmann				
Robert Crites						

APPLICATION FOR CITY OF MIDLAND BOARDS/COMMISSIONS/COMMITTEES

As an applicant for a City board, commission, or committee, please be advised that all information on this application is subject to the Texas Open Records Act and will be available to the public.

PLEASE TYPE OR PRINT CLEARLY:

Date: 7/8/2024

Name: Lisa Kay Vandenberg

Phone: 817.901.6210 **(Home)**

Address: 3606 Godfrey Ct

_____ **(Business)**

Midland Tx 79707

Email: lisakay@kwel.com

(City) (State) (Zip)

I am [✓] **I am not** [ ] **a U.S. Citizen**

Please tell us about yourself:

Are you a graduate of Midland 101? [ ] **yes** [✓] **no**

I have lived in Midland 7 **years.**

Occupation: co-host KWEL radio

Professional and/or Community Activities:

I previously lived in Granbury where I was VP for the Rainbow Room of Hodd and Somerville counties, in charge of will call for the OperaHouse, chior booster pres, theatre booster VP,pres of Newcomers volunteering committee. Currently I am a volunteer foster fot Fix West Texas

What is your personal vision for the City?

I would love for people passing through, for a month or a lifetime, to have personal pride for the city.

Please specify any time constraints you may have.

On air from 7-10am but still have some flexability with that.

Please list below the Board(s) or Commission(s) on which you are interested in serving:

(You can find a complete and current list on the City's website at www.midlandtexas.gov**)**

(1) Name of Board/Commission:

Animal Control Advisory Commission

Please tell us why you are interested in serving on this board or commission.

I have a love for all animals and I feel strongly about working with the city to make animal control a place for the city to be proud of.

What contribution would you most like to make?

I would like to be a media presence to help bring community awareness to our overpopulation of pets.

Additional pertinent information or references:

Amy S Burkes 432.528.2009

John Burkholder 432.230.0177

Craig Anderson 432.214.3433

(2) Name of Board/Commission:

What contribution would you most like to make?

Additional pertinent information or references:

Applications are maintained on file in the City Secretary's office for a period of one year. Should you need additional information, please call us at 432-685-7430.

Signature of Applicant

Applications may be submitted online via email or print in order to send by mail:

City of Midland

City Secretary's Office

PO Box 1152

Midland, TX 79702

Submit Via Email

Print Application

APPLICATION FOR CITY OF MIDLAND BOARDS/COMMISSIONS/COMMITTEES

As an applicant for a City board, commission, or committee, please be advised that all information on this application is subject to the Texas Open Records Act and will be available to the public.

PLEASE TYPE OR PRINT CLEARLY:

Date: 6/18/2024

Name: Devyn Daley

Phone: 940-210-5078 (Home)

Address: 3202 Boyd Avenue

(Business)

Midland TX 79705

Email: devyndaley94@outlook.com

(City) (State) (Zip)

I am [X] I am not [ ] a U.S. Citizen

Please tell us about yourself:

Are you a graduate of Midland 101? [X] yes [ ] no

I have lived in Midland 6 years.

Occupation: Landman

Professional and/or Community Activities:

President/Founder of Permian Paws In Need 2023- Present
Foster Coordinator of Sassys Dogs Rescue 2020- 2023
Foster for various Rescues 2019- present

What is your personal vision for the City?

Continue to cultivate a positive reputation for Midland being a family friendly city & through that encourage responsible pet ownership that shows how friendly & safe midland is.

Please specify any time constraints you may have.

N/A Flexible Schedule

Please list below the Board(s) or Commission(s) on which you are interested in serving:

(You can find a complete and current list on the City's website at www.midlandtexas.gov)

(1) Name of Board/Commission:

Animal Advisory Commission

Please tell us why you are interested in serving on this board or commission.

to be able to further help the animal welfare community & educate the public on responsible pet ownership

What contribution would you most like to make?

help brainstorm ways to increase adoptions, promote responsible pet ownership in the community, & improve animal welfare in the community.

Additional pertinent information or references:

Autumn Bohannan: 432-661-9000

(2) Name of Board/Commission:

What contribution would you most like to make?

Additional pertinent information or references:

Applications are maintained on file in the City Secretary's office for a period of one year. Should you need additional information, please call us at 432-685-7430.

Signature of Applicant

Dwyn Daley

Applications may be submitted online via email or print in order to send by mail:

City of Midland

City Secretary's Office

PO Box 1152

Midland, TX 79702

Submit Via Email

Print Application

APPLICATION FOR CITY OF MIDLAND BOARDS/COMMISSIONS/COMMITTEES

As an applicant for a City board, commission, or committee, please be advised that all information on this application is subject to the Texas Open Records Act and will be available to the public.

PLEASE TYPE OR PRINT CLEARLY:

Date: 5/31/2024

Name: Shelly Haney

Phone: 432-741-1424 (Home)

Address: 5308 Railea Court

432-685-6767 (Business)

Midland TX 79703

Email: shaney@midland.edu

(City) (State) (Zip)

I am ☑ I am not ☐ a U.S. Citizen

Please tell us about yourself:

Are you a graduate of Midland 101? ☐ yes ☑ no

I have lived in Midland 25 years.

Occupation: Midland College - Executive Director of Retention, R

Professional and/or Community Activities:

Public school educator with Midland ISD for 25 years (teacher, coach, administrator)

Graduate of Leadership Midland, 2023

Graduate of Nonprofit Executive Leadership Certification, Nonprofit Management Center, member @ Crestview Baptist Church

What is your personal vision for the City?

My vision is that Midland continue to evolve and grow with the times to meet the needs of our diverse community.

Please specify any time constraints you may have.

My workday is very flexible and I can be available most evenings and afternoons as needed.

Please list below the Board(s) or Commission(s) on which you are interested in serving:

(You can find a complete and current list on the City's website at www.midlandtexas.gov)

(1) Name of Board/Commission:

ANIMAL CONTROL ADVISORY COMMISSION BOARD

Please tell us why you are interested in serving on this board or commission.

I am an animal lover and have only owned rescued pets. I would love to work to help control the pet poplulation in Midland.

I do realize that we can't save them all, though.

I have been recently impressed with the partnerships I have seen the animal shelter have with local rescues to save animals.

What contribution would you most like to make?

I would like to continue to partner with local rescues to get adoptable animals out of the shelter and into homes!

i would like to serve Midland beyond the work I have done in the education field for 25 years.

Additional pertinent information or references:

Susannah Prucka 512-635-2803

Andra Jones 940-206-6037

Brian Stubbs 432-413-3455

(2) Name of Board/Commission:

What contribution would you most like to make?

Additional pertinent information or references:

Applications are maintained on file in the City Secretary's office for a period of one year. Should you need additional information, please call us at 432-685-7430.

Signature of Applicant



Applications may be submitted online via email or print in order to send by mail:

City of Midland

City Secretary's Office

PO Box 1152

Midland, TX 79702

Submit Via Email

Print Application

APPLICATION FOR CITY OF MIDLAND BOARDS/COMMISSIONS/COMMITTEES

As an applicant for a City board, commission, or committee, please be advised that all information on this application is subject to the Texas Open Records Act and will be available to the public.

PLEASE TYPE OR PRINT CLEARLY:

Date: 8/7/24

Name: Tim Jakel Jr.

Phone: 432-853-1001 **(Home)**

Address: 2309 Country Club Drive

_____ **(Business)**

Midland TX 79701

(City) (State) (Zip)

Email: [redacted]

tjakel@casadeAmigos midland.org

I am [X] **I am not** [ ] **a U.S. Citizen**

Please tell us about yourself:

Are you a graduate of Midland 101? [ ] **yes** [X] **no**

I have lived in Midland 31 **years.**

Occupation: Director of Development & Donor Engagement

Professional and/or Community Activities:

Nonprofit professional/Director, VP of Alumni - Midland College, NEZC Volunteer, United Way Odessa Committee member.

What is your personal vision for the City?

To grow opportunities & infrastructure with the demanding growth of the population.

Please specify any time constraints you may have.

N/A - dependant on work schedule (I am flexable)

Please list below the Board(s) or Commission(s) on which you are interested in serving:

(You can find a complete and current list on the City's website at www.midlandtexas.gov)

(1) Name of Board/Commission:

Barbara & George H. W. Bush Convention Center Advisory Board

Please tell us why you are interested in serving on this board or commission.

RoSco brought up in multiple conversations and I am heavily involved in utilizing Bush Convention Center. Also wanting to be more involved.

What contribution would you most like to make?

Time, effort and guidance

Additional pertinent information or references:

References include David Chancellor (Chevron), Valerie Acosta, Karmen Bryant, Anthony Carrillo (McDonalds owner), Shelly Williams (Oxy), Genene DeLeon (MCCU),

(2) Name of Board/Commission:

If not first choice - Citizens Development & Hotel/Motel Advisory Board

What contribution would you most like to make?

Time, effort and guidance

Additional pertinent information or references:

N/A

Applications are maintained on file in the City Secretary's office for a period of one year. Should you need additional information, please call us at 432-685-7430.

Signature of Applicant

Applications may be submitted online via email or print in order to send by mail:

City of Midland

City Secretary's Office

PO Box 1152

Midland, TX 79702

Submit Via Email

Print Application

MIDLAND
Feel the Energy!

APPLICATION FOR CITY OF MIDLAND BOARDS/COMMISSIONS/COMMITTEES

As an applicant for a City board, commission, or committee, please be advised that all information on this application is subject to the Texas Open Records Act and will be available to the public.

PLEASE TYPE OR PRINT CLEARLY:

Date: 7/23/2024

Name: Brandon P Ofield

Phone: 432-413-9196 **(Home)**

Address: 5 Reo Ct

432-458-3675 **(Business)**

Midland TX 79705

(City) (State) (Zip)

Email: ofieldb@gmail.com

I am [✔] **I am not** [ ] **a U.S. Citizen**

Please tell us about yourself:

Are you a graduate of Midland 101? [✔] **yes** [ ] **no**

I have lived in Midland 38 **years.**

Occupation: Accounting

Professional and/or Community Activities:

Previously served two terms on the Hotel/Motel Tax/Citizens Advisory Committee for the city of Midland, 2 years as Chairman.

What is your personal vision for the City?

I envision a Midland with various quality of life options for everyone. Midland is my hometown and I want everyone to see the potential it has. Most of my good friends are not native Midlanders or even Texans, but they have great things to say about our city and its citizens. Midland must adapt to attract quality businesses and residents but do so in a fiscally responsible way.

Please specify any time constraints you may have.

None

Please list below the Board(s) or Commission(s) on which you are interested in serving:

(You can find a complete and current list on the City's website at *www.midlandtexas.gov*)

(1) Name of Board/Commission:

Airport Planning and Development Board

Please tell us why you are interested in serving on this board or commission.

I would love the opportunity to advise Council on the best use of Airport resources and land. The airports have seen a rise in usage and increase in traffic which in turn calls for common sense solutions to parking and crowd mangement. Attracting new service

routes from airlines and the hiring and retention of support staff should be at the forefront.

What contribution would you most like to make?

I honestly just love to serve the city i was born in and call home.

Additional pertinent information or references:

(2) Name of Board/Commission:

Barbara & George HW Bush Convention Center Advisory Board

What contribution would you most like to make?

Provide sound advice to the City Council on all matters related to the convention center. Assist in seeing the convention center promote and grow the events held there.

Additional pertinent information or references:

Applications are maintained on file in the City Secretary's office for a period of one year. Should you need additional information, please call us at 432-685-7430.

Signature of Applicant

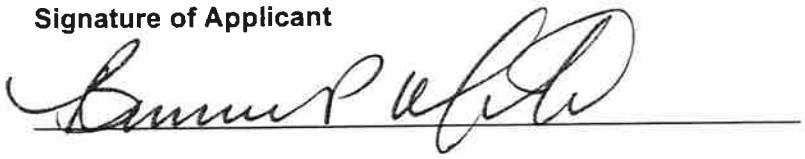

Applications may be submitted online via email or print in order to send by mail:

City of Midland

City Secretary's Office

PO Box 1152

Midland, TX 79702

Submit Via Email

Print Application

APPLICATION FOR CITY OF MIDLAND BOARDS/COMMISSIONS/COMMITTEES

As an applicant for a City board, commission, or committee, please be advised that all information on this application is subject to the Texas Open Records Act and will be available to the public.

PLEASE TYPE OR PRINT CLEARLY:

Date: 7/31/2024

Name: Sherri Allen

Phone: 432-413-4360 **(Home)**

Address: 6339 Prairie Ridge Drive

432-221-0474 **(Business)**

Midland TX 79707

Email: sherri.l.allen@conocophillips.com

(City) (State) (Zip)

I am [✓] **I am not** [ ] **a U.S. Citizen**

Please tell us about yourself:

Are you a graduate of Midland 101? [✓] **yes** [ ] **no**

I have lived in Midland 13.5 **years.**

Occupation: Accountant/Financial Analyst-ConocoPhillips

Professional and/or Community Activities:

PASPB/COPAS - Petroleum Accountants Society of the Permian Basin - Accredited Petroleum Accountant,Past President,Director

Bachelor's Degree- Double Major in Accounting & Business Administration

Volunteer/Fan/Attendee of various local school, city, church events. Love to travel, Enjoy family and activities.

What is your personal vision for the City?

Midland is a diamond in the rough with vast array of resources, technologies, central location and people that has shown to be vital to the state and US economy and expect increasing positive growth of visitors, attractions, businesses and energies.

Please specify any time constraints you may have.

My employer ConocoPhillips supports and encourages energies towards contributing to community boards/commissions.

Third Wednesdays are perfect for my schedule. I have the extra time to dedicate fully to this board.

Please list below the Board(s) or Commission(s) on which you are interested in serving:

(You can find a complete and current list on the City's website at *www.midlandtexas.gov*)

(1) Name of Board/Commission:

Airport Planning and Development Board

Please tell us why you are interested in serving on this board or commission.

I was very impressed with Justine Ruff and the presentation during Midland 101 this year. I feel called to serve on this board.

I have been an avid air traveler for many years. I find great interest in the travel industry, Airport and Space Port and would like

to contribute to promoting positive growth and development through my financial and managerial knowledge and travel experiences.

What contribution would you most like to make?

I would like to contribute my financial, planning, budget and management knowledge along with travel and airport experiences to support the airport and associated assets. Midland Int'l Air & Space Port continues to experience exciting growth & expect the trend to continue upward as an airport of choice and pride of the Midland/Odessa areas along with the rising Space tech needs of US

Additional pertinent information or references:

I have the time on Wednesdays to meet and third Wednesdays are perfect.

I appreciate the Midland 101 class and information (hats off to Martha Cortazar and her team) to educate and showcase the boards and commissions. I am proud to live in Midland and excited about future positive growth with the airport playing a vital role.

(2) Name of Board/Commission:

Barbara & George H.W. Bush Convention Center Advisory Board

What contribution would you most like to make?

Financial, planning and management advisement and support.

I have 15+ years of accounting management experience with a Bachelor's degree double major in Accounting & Business Administration.

Additional pertinent information or references:

I am proud to live in Midland and excited about the events that are held for the community and surrounding areas. The Convention Center is needed to enhance Business, Organizations, and Community offerings to attract positive energy into the City and downtowr

Applications are maintained on file in the City Secretary's office for a period of one year. Should you need additional information, please call us at 432-685-7430.

Signature of Applicant



Applications may be submitted online via email or print in order to send by mail:

City of Midland

City Secretary's Office

PO Box 1152

Midland, TX 79702

Submit Via Email

Print Application

APPLICATION FOR CITY OF MIDLAND BOARDS/COMMISSIONS/COMMITTEES

As an applicant for a City board, commission, or committee, please be advised that all information on this application is subject to the Texas Open Records Act and will be available to the public.

PLEASE TYPE OR PRINT CLEARLY:

Date: 8/28/2024

Name: Josh Ferguson

Phone: (940) 389-8858 **(Home)**

Address: 1210 Lumina Court

(432) 685-7290 **(Business)**

Midland Texas 79705

Email: jferguson@midlandtexas.gov

(City) (State) (Zip)

I am [✓] **I am not** [ ] **a U.S. Citizen**

Please tell us about yourself:

Are you a graduate of Midland 101? [ ] **yes** [✓] **no**

I have lived in Midland 16.5 **years.**

Occupation: Civil Engineer

Professional and/or Community Activities:

I am the current Assistant City Engineer for the City of Midland, and I have worked for the City as a civil engineer for 12.5 years. I am in my 3rd year as a member of my local church's Vestry (Christ Church Anglican), and I serve as the Vestry's Jr. Warden.

What is your personal vision for the City?

I think Midland has a lot of untapped potential if it can get out ahead of its development and growth so it can become more proactive rather than reactive. If it ever achieves that, not only would the lives of the average citizen improve, but I also believe that Midland would start attracting more things like the proposed zoo, and also get interest from industries that are not always tied to oil.

Please specify any time constraints you may have.

Monday - Friday from 8 am - 5 PM are my normal work hours. Sundays are for church, and my Vestry group meets on the 3rd Tuesday of every month at 6 PM. My schedule is otherwise pretty flexible, although my preference would be to meet in the evening during the week rather than on a Saturday.

Please list below the Board(s) or Commission(s) on which you are interested in serving:

(You can find a complete and current list on the City's website at *www.midlandtexas.gov*)

(1) Name of Board/Commission:

Capital Improvement Advisory Committee

Please tell us why you are interested in serving on this board or commission.

Public infrastructure is the foundation that much of society depends on to function. The better that foundation works, the better off everything is that uses it. And the better planned things are before they're needed, the better and smoother things will go down the

line.

What contribution would you most like to make?

Help to anticipate the needs of the City as it develops and navigate the best way to successfully implement the capital improvements plan and other applicable elements in a way to address such needs responsibly and efficiently. If there are ways to do this while also improving how existing parts of Midland operate, then even better.

Additional pertinent information or references:

My references include Jose Ortiz, the City of Midland's Assistant City Manager, and Carl Craigo, the City of Midland's Utilities Director. As an engineer working for the City of Midland for over a decade, I have a considerable amount of knowledge about the City's public infrastructure and how it is designed, constructed, etc. and its impact on the City both on large and small scales.

(2) Name of Board/Commission:

What contribution would you most like to make?

Additional pertinent information or references:

Applications are maintained on file in the City Secretary's office for a period of one year. Should you need additional information, please call us at 432-685-7430.

Signature of Applicant

Josh Ferguson

Applications may be submitted online via email or print in order to send by mail or fax:

City of Midland
City Secretary's Office
PO Box 1152
Midland, TX 79702
FAX: (432) 685-7433

Submit Via Email

Print Application

MIDLAND
Feel the Energy!

APPLICATION FOR CITY OF MIDLAND BOARDS/COMMISSIONS/COMMITTEES

As an applicant for a City board, commission, or committee, please be advised that all information on this application is subject to the Texas Open Records Act and will be available to the public.

PLEASE TYPE OR PRINT CLEARLY:

Date: 6/5/2024

Name: Michael Dietrich

Phone: 281-513-4149 **(Home)**

Address: 2500 Seaboard Ave

_____ **(Business)**

Midland TX 79705

Email: Mike.wd1986@gmail.com

(City) (State) (Zip)

I am [✓] **I am not** [ ] **a U.S. Citizen**

Please tell us about yourself:

Are you a graduate of Midland 101? [ ] **yes** [✓] **no**

I have lived in Midland 4.5 **years.**

Occupation: Landman

Professional and/or Community Activities:

I've served on the Midland Country Club Membership and House Committees. I'm currently a member of ADAM-Permian, serve on the committee for MCRC's "Take the Money & Run" event, and am a very active parent for my kids schools (Hillander and the YMCA CLC). I love this community and want to get move involved.

What is your personal vision for the City?

Our city is the energy capital of the country and arguably the world. We should have TOP NOTCH amenities for every aspect of our lives. I want this city to grow and prosper and become a national spotlight city. So much important things go on here and we need to develop ourselves as a nationally prominent city.

Please specify any time constraints you may have.

I have a very flexible work schedule and a supportive wife. So I have seemingly no constraints.

Please list below the Board(s) or Commission(s) on which you are interested in serving:

(You can find a complete and current list on the City's website at www.midlandtexas.gov)

(1) Name of Board/Commission:

Airport planning and development board, Citizens Development and Hotel/Motel Advisory Board, Oil & Gas Advisory Commission

Please tell us why you are interested in serving on this board or commission.

I want to serve the city I plan on raising my family in for many years to come. This board is really exciting for the expansion of opportunities for Midland and driving the growth we so badly need. Energy is the best industry in the world, but being able to

diversify and add aerospace would be fantastic. It is an exciting opportunity and I would love to be a part of it.

What contribution would you most like to make?

I would love to be part of this new and lasting legacy for our city. I want to contribute in any way that I can. I have a background in financial analysis and sales. I bring a background well suited for the outlook of this opportunity.

Additional pertinent information or references:

Spencer Robnett - 432-553-8545, Aron Marquez - 432-770-8624, Chris Blonkvist - 432-559-5784, Kevin Sparks - 432-556-0518

(2) Name of Board/Commission:

What contribution would you most like to make?

Additional pertinent information or references:

Applications are maintained on file in the City Secretary's office for a period of one year. Should you need additional information, please call us at 432-685-7430.

Signature of Applicant



Applications may be submitted online via email or print in order to send by mail:

City of Midland

City Secretary's Office

PO Box 1152

Midland, TX 79702

Submit Via Email

Print Application

Late Submission: 09/09/2024

APPLICATION FOR CITY OF MIDLAND BOARDS/COMMISSIONS/COMMITTEES

As an applicant for a City board, commission, or committee, please be advised that all information on this application is subject to the Texas Open Records Act and will be available to the public.

PLEASE TYPE OR PRINT CLEARLY:

Date: 7/18/2024

Name: ROY GEER

Phone: 432-553-4288 **(Home)**

Address: 2606 W SHANDON AVE

432-848-4260 **(Business)**

MIDLAND TX 79705

Email: ROYGEERCPA@GMAIL.COM

(City) (State) (Zip)

I am [✔] **I am not** [ ] **a U.S. Citizen**

Please tell us about yourself:

Are you a graduate of Midland 101? [ ] **yes** [✔] **no**

I have lived in Midland 35 **years.**

Occupation: CONTROLLER/ACCOUNTANT

Professional and/or Community Activities:

MIDLAND CHAMBER OF COMMERCE BOARD AND VOLUNTEER - 10 YEARS

NONPROFIT MANAGMENT CENTER BOARD

VARIOUS ADVISORY & VOLUNTEER ROLES IN MY CHURCH, CITY YOUTH SPORTS LEAGUES, MISD SCHOOLS

What is your personal vision for the City?

I GREW UP IN THIS COMMUNITY AND HAVE ONLY LIVED HERE AND IN LUBBOCK DURING COLLEGE.

MY WIFE AND I ARE BOTH FROM HERE AND WE A HOPEFUL FOR A COMMUNITY WE CAN BE PROUD OF AND

THAT OUR CHILDREN WOULD BE GLAD TO COME BACK TO ONE DAY.

Please specify any time constraints you may have.

MY PREFERENCE IS FOR MEETINGS DURING THE BUSINESS DAY (8-5P) WHEN POSSIBLE AS I SERVE MY FAMILY

IN THE EVENINGS WITH VARIOUS COACHING AND CHURCH RESPONSIBLITIES. HOWEVER, I AM AVAILABLE FOR

EVENING MEETINGS THAT ARE PLANNED AHEAD OF TIME GIVING ME OPPORTUNITY TO ADJUST MY SCHEDULE.

Please list below the Board(s) or Commission(s) on which you are interested in serving:

(You can find a complete and current list on the City's website at www.midlandtexas.gov**)**

(1) Name of Board/Commission:

Citizens Development and Hotel/Motel Advisory Board: (Advisory)

Please tell us why you are interested in serving on this board or commission.

I HAVE BEEN INVOLVED IN MIDLAND FOR MORE THAN A DECADE SINCE RETURNING FROM COLLEGE AND I WANT TO

HAVE A POSITIVE INFLUENCE ON THE GROWTH BUT ALSO THE IMAGE AND STORY WE SHOW OUTSIDE OF MIDLAND.

What contribution would you most like to make?

MIDLAND HAS A HERITAGE OF BEAUTIFUL PEOPLE AND RELATIONSHIPS THAT CAN BE COUNTED ON BY OUR NEIGHBORS. I AM EXCITED FOR US TO CONTINUE THAT LEGACY AND SHOW THE REST OF THE WORLD HOW SPECIAL OF A PLACE THIS IS TO LIVE, WORK AND PLAY. I WANT TO HELP TELL THAT STORY.

Additional pertinent information or references:

I KNOW MANY OF THE CURRENT COUNCIL MEMBERS THROUGH VARIOUS COMMUNITY INVOLVEMENT EVENTS AND VENUES. I ALSO SERVE ON THE QUALITY OF PLACE CONSERVANCY WHICH STRIVES TO ENHANCE OUR QUALITY OF LIFE IN THE COMMUNITY PHYSICALLY AND TANGIBLY IN MIDLAND.

(2) Name of Board/Commission:

What contribution would you most like to make?

Additional pertinent information or references:

Applications are maintained on file in the City Secretary's office for a period of one year. Should you need additional information, please call us at 432-685-7430.

Signature of Applicant



Applications may be submitted online via email or print in order to send by mail:

City of Midland

City Secretary's Office

PO Box 1152

Midland, TX 79702

Submit Via Email

Print Application

MIDLAND
Feel the Energy!

APPLICATION FOR CITY OF MIDLAND BOARDS/COMMISSIONS/COMMITTEES

As an applicant for a City board, commission, or committee, please be advised that all information on this application is subject to the Texas Open Records Act and will be available to the public.

PLEASE TYPE OR PRINT CLEARLY:

Date: March 1, 2024

Name: Joy Maraio

Phone: 432-3527777 (Home)

Address: 1400 Princeton Ave

(Business)

Midland TX 79701

Email: joymaraio@yahoo.com

(City) (State) (Zip)

I am [✓] I am not [ ] a U.S. Citizen

Please tell us about yourself:

Are you a graduate of Midland 101? [✓] yes [ ] no

I have lived in Midland 23 years.

Occupation: Director of Marketing for the MCHS.

Professional and/or Community Activities:

I have served on the City of Midland Beautification Committee and also was the chair of the community advisory committee for the Midland Center.

What is your personal vision for the City?

To increase downtown beautification and development to create a more robust urbanization of Midland.

Please specify any time constraints you may have.

I work full time but can schedule professional meetings such as attending Advisory Board meetings.

Please list below the Board(s) or Commission(s) on which you are interested in serving:

(You can find a complete and current list on the City's website at www.midlandtexas.gov)

(1) Name of Board/Commission:

Citizens Development Hotel/Motel Advisory Board.

Please tell us why you are interested in serving on this board or commission.

During the last two decades, I have been actively involved in promoting development in Midland and wish continue to do so by serving on the Hotel/Motel Advisory Board.

What contribution would you most like to make?

Extensive experience in community engagement and public relations. As well, I worked for the City of Calgary in Canada as an Information Officer.

Additional pertinent information or references:

I have been working at Midland Community Healthcare Services and had the pleasure of meeting with several staff members of the City of Midland.

(2) Name of Board/Commission: Citizens Development Hotel / Hotel Advisory Board

What contribution would you most like to make?

I am confident to be a pro-active member of the Board to hopefully fulfill my obligations to the City for the benefit of the community.

Additional pertinent information or references:

- Tommy Gonzalez
- Stuart Doreen

} Both gentlemen have met and/or seen my work in development and marketing.

Applications are maintained on file in the City Secretary's office for a period of one year. Should you need additional information, please call us at 432-685-7430.

Signature of Applicant

Applications may be submitted online via email or print in order to send by mail:

City of Midland

City Secretary's Office

PO Box 1152

Midland, TX 79702

Submit Via Email

Print Application

APPLICATION FOR CITY OF MIDLAND BOARDS/COMMISSIONS/COMMITTEES

As an applicant for a City board, commission, or committee, please be advised that all information on this application is subject to the Texas Open Records Act and will be available to the public.

PLEASE TYPE OR PRINT CLEARLY:

Date: 7/10/2024

Name: Lindsey Adams

Phone: 915-525-5875 **(Home)**

Address: 300 N. Loraine

_____ **(Business)**

Midland Texas 79705

Email: ladams@midlandtexas.gov

(City) (State) (Zip)

I am [✓] **I am not** [ ] **a U.S. Citizen**

Please tell us about yourself:

Are you a graduate of Midland 101? [ ] **yes** [✓] **no**

I have lived in Midland 0 **years.**

Occupation: Intergovernmental Relations Officer

Professional and/or Community Activities:

Work for the City of Midland as the Intergovernmental Relations Officer

Board Member for Keep Midland Beautiful

What is your personal vision for the City?

I want to see that the residents of Midland have a safe, accessible and friendly environment to live, work and play

Please specify any time constraints you may have.

Work 8-5 but can be flexible for board meetings during the day

Please list below the Board(s) or Commission(s) on which you are interested in serving:

(You can find a complete and current list on the City's website at www.midlandtexas.gov**)**

(1) Name of Board/Commission:

Midland-Odessa Urban Transit District Board

Please tell us why you are interested in serving on this board or commission.

This board makes decisions about the transit system in Midland, as we are making decisions about transportation projects, it is impor

What contribution would you most like to make?

Ensure that the City of Midland and its residents have a voice when it comes to make decisions about our mass transit operations.

Additional pertinent information or references:

(2) Name of Board/Commission:

What contribution would you most like to make?

Additional pertinent information or references:

Applications are maintained on file in the City Secretary's office for a period of one year. Should you need additional information, please call us at 432-685-7430.

Signature of Applicant

Lindsey Adams Digitally signed by Lindsey Adams
Date: 2024.07.10 10:48:33 -05'00'

Applications may be submitted online via email or print in order to send by mail or fax:

City of Midland
City Secretary's Office
PO Box 1152
Midland, TX 79702
FAX: (432) 685-7433

Submit Via Email

Print Application

APPLICATION FOR CITY OF MIDLAND BOARDS/COMMISSIONS/COMMITTEES

As an applicant for a City board, commission, or committee, please be advised that all information on this application is subject to the Texas Open Records Act and will be available to the public.

PLEASE TYPE OR PRINT CLEARLY:

Date: 6/13/2024

Name: Vincent Doczy

Phone: 574.612.4494 **(Home)**

Address: 5518 Rio Grande Ave

_____ **(Business)**

Midland TX 79707

Email: vince.doczy@conocophillips.com

(City) (State) (Zip)

I am [✓] **I am not** [ ] **a U.S. Citizen**

Please tell us about yourself:

Are you a graduate of Midland 101? [ ] **yes** [✓] **no**

I have lived in Midland 7 **years.**

Occupation: Petroleum Engineer

Professional and/or Community Activities:

Soceity of Petroleum Engineers - Board Member

Patriot Network (Conocophillips) - Chair

Project214 - Board Member

What is your personal vision for the City?

I have adopted Midland as my home and want to see it be the best it can be.

Please specify any time constraints you may have.

I am employed during regular business hours. I am available most day with notice.

Please list below the Board(s) or Commission(s) on which you are interested in serving:

(You can find a complete and current list on the City's website at www.midlandtexas.gov)

(1) Name of Board/Commission:

Oil and Gas Comission

Please tell us why you are interested in serving on this board or commission.

This is where the base of my expertise lies. I've been told we were short volunteers and I would like to step up for my community.

What contribution would you most like to make?

I would be happy assisting in anyway that I am able.

Additional pertinent information or references:

I have worked in teh Oil and Gas industry for 10 years and am currently employeed at Conocophillips.

I have a masters degree in petroleum engineering.

(2) Name of Board/Commission:

Parks and Recreation comission

What contribution would you most like to make?

I would like to carry on the great tradition of the american parks system.

Additional pertinent information or references:

I regularly volunteer in park clean up events through Keep Midland Beautiful.

Applications are maintained on file in the City Secretary's office for a period of one year. Should you need additional information, please call us at 432-685-7430.

Signature of Applicant

Vincent M Doczy

Applications may be submitted online via email or print in order to send by mail:

City of Midland

City Secretary's Office

PO Box 1152

Midland, TX 79702

Submit Via Email

Print Application

Late Submission: 09/11/2024

APPLICATION FOR CITY OF MIDLAND BOARDS/COMMISSIONS/COMMITTEES

As an applicant for a City board, commission, or committee, please be advised that all information on this application is subject to the Texas Open Records Act and will be available to the public.

PLEASE TYPE OR PRINT CLEARLY:

Date: 9/11/2024

Name: Nick Stowers

Phone: 405-479-4767 **(Home)**

Address: 1501 Seaboard Avenue 432-682-3715 **(Business)**

Midland Texas 79705

(City) (State) (Zip)

Email: nickstowers53@gmail.com

I am [✔] **I am not** [ ] **a U.S. Citizen**

Please tell us about yourself:

Are you a graduate of Midland 101? [ ] **yes** [✔] **no**

I have lived in Midland 4 **years.**

Occupation: Petroleum Engineer

Professional and/or Community Activities:

Active member of the Society of Petroleum Engineers

Member at Redeemer Church Midland

Volunteer at The Field's Edge.

What is your personal vision for the City?

I want Midland to become a destination for people to live and raise their families. Midland is often viewed as just a stop on the road, but we have the potential for much more. I think we have to ability to change the trajectory of the city with the proper use of the resources we have at our disposal.

Please specify any time constraints you may have.

I'm fairly flexible on time with enough notice

Please list below the Board(s) or Commission(s) on which you are interested in serving:

(You can find a complete and current list on the City's website at *www.midlandtexas.gov***)**

(1) Name of Board/Commission:

Oil and Gas Advisory Committee

Please tell us why you are interested in serving on this board or commission.

I want to give back to the community in which I reside, and this is a way to use my vocational skills to do that.

What contribution would you most like to make?

Utilizing my technical oil and gas skills to help the city best manage oil and gas activity within city limits.

Additional pertinent information or references:

Layton Hargesheimer

Eric Davidson

(2) Name of Board/Commission:

N/A

What contribution would you most like to make?

N/A

Additional pertinent information or references:

N/A

Applications are maintained on file in the City Secretary's office for a period of one year. Should you need additional information, please call us at 432-685-7430.

Signature of Applicant

Applications may be submitted online via email or print in order to send by mail:

City of Midland

City Secretary's Office

PO Box 1152

Midland, TX 79702

Submit Via Email

Print Application

MIDLAND
Feel the Energy!

APPLICATION FOR CITY OF MIDLAND BOARDS/COMMISSIONS/COMMITTEES

As an applicant for a City board, commission, or committee, please be advised that all information on this application is subject to the Texas Open Records Act and will be available to the public.

PLEASE TYPE OR PRINT CLEARLY:

Name: Weston (Wes) Turner

Address: 4901 Thames Ct

Midland (City) Tx (State) 79705 (Zip)

Date: 8/8/2024

Phone: 817-201-6812 **(Home)**

(Business)

Email: westonturner@sbcglobal.net

I am [✔] **I am not** [ ] **a U.S. Citizen**

Please tell us about yourself:

I have lived in Midland 10 **years.**

Are you a graduate of Midland 101? [ ] **yes** [✔] **no**

Occupation: Engineer

Professional and/or Community Activities:

Engineering Manager at XTO Energy

Board member of two local non-profits

What is your personal vision for the City?

My wife and I have lived in Midland for 10 years, raising a family of three kids. Our youngest son was born in Midland and will always call it his home. We have grown roots in this community and we seek to see it flourish. Midland is full of great people, I want to help provide them the best environment possible to raise their families.

Please specify any time constraints you may have.

I hold a full-time office job with some flexibility during weekday working hours. I can generally be available during and around lunch, and could periodically meet other times during the day. Evenings are generally available.

Please list below the Board(s) or Commission(s) on which you are interested in serving:

(You can find a complete and current list on the City's website at *www.midlandtexas.gov***)**

(1) Name of Board/Commission:

Parks and Recreation Commission

Please tell us why you are interested in serving on this board or commission.

I think Midland is a great place to raise a family, I want to ensure that continues and is enhanced as much as possible. My kids have played sports and enjoyed the parks Midland has to offer. The parks have been improved over time, I would like to see that continue.

What contribution would you most like to make?

I bring the perspective of a father of 3 kids (ages 4 through 12) and a level-headed personality. I would like to apply this perspective and the solid judgement of an engineer to help solve issues faced by the Parks. I would promote development and improvement of the parks system, making Midland an attractive destination for families and a model for other cities.

Additional pertinent information or references:

(2) Name of Board/Commission:

What contribution would you most like to make?

Additional pertinent information or references:

Applications are maintained on file in the City Secretary's office for a period of one year. Should you need additional information, please call us at 432-685-7430.

Signature of Applicant

Applications may be submitted online via email or print in order to send by mail:

City of Midland

City Secretary's Office

PO Box 1152

Midland, TX 79702

Submit Via Email

Print Application

APPLICATION FOR CITY OF MIDLAND BOARDS/COMMISSIONS/COMMITTEES

As an applicant for a City board, commission, or committee, please be advised that all information on this application is subject to the Texas Open Records Act and will be available to the public.

PLEASE TYPE OR PRINT CLEARLY:

Date: 8/9/2024

Name: Matthew Wilson

Phone: 832.472.6978 **(Home)**

Address: 2108 N I St

_____ **(Business)**

Midland TX 79705

Email: mattd.wilson1@gmail.com

(City) (State) (Zip)

I am [✓] **I am not** [ ] **a U.S. Citizen**

Please tell us about yourself:

Are you a graduate of Midland 101? [ ] **yes** [✓] **no**

I have lived in Midland 8 **years.**

Occupation: Operations Manager at ConocoPhillips

Professional and/or Community Activities:

I am an Operations Manager at ConocoPhillips. I also coach my daughter's soccer team in the MSA league.

Myself and my family are active members at Redeemer Church.

What is your personal vision for the City?

My vision for the city is to enhance the quality of life for all residents by creating more vibrant, and accessible environment. Work to expand nature and walking trails to provide residents with safe and scenic routes to enjoy. Enhance outdoor facilities, rec areas, spor facilities. Expand the park system, and improve playgrounds with sun covers so they can be used more in the summer.

Please specify any time constraints you may have.

Busy second Tuesdays of the month with company safety meetings.

Please list below the Board(s) or Commission(s) on which you are interested in serving:

(You can find a complete and current list on the City's website at www.midlandtexas.gov)

(1) Name of Board/Commission:

Parks and Recreation Commission

Please tell us why you are interested in serving on this board or commission.

I have a passion for the outdoors and want to create more access for families locally. My family enjoys spending time outside and at at the parks/pools the city has. I want to help give back to the community and help it grow/ improve quality of life.

What contribution would you most like to make?

Allocate time and effort to help expand the park system to continue to improve the quality of life locally. Help build on the work already done and achieve visible, sustainable results no matter how big or small. Expand the pool system, more outdoor water related activities.

Additional pertinent information or references:

(2) Name of Board/Commission:

Airport Planning and Development Board

What contribution would you most like to make?

Midland is rapidly growing. I'd like to help the airport grow with the city and continue to do an outstanding job supporting the community, economy and quality of life for the city. Parking lots expansion, and more direct flights to cities further away than Dallas, Houston, and Las Vegas.

Additional pertinent information or references:

I'd like to help give back to the community.

Applications are maintained on file in the City Secretary's office for a period of one year. Should you need additional information, please call us at 432-685-7430.

Signature of Applicant



Applications may be submitted online via email or print in order to send by mail:

City of Midland

City Secretary's Office

PO Box 1152

Midland, TX 79702

Submit Via Email

Print Application

APPLICATION FOR CITY OF MIDLAND BOARDS/COMMISSIONS/COMMITTEES

As an applicant for a City board, commission, or committee, please be advised that all information on this application is subject to the Texas Open Records Act and will be available to the public.

PLEASE TYPE OR PRINT CLEARLY:

Date: 2/26/2024

Name: Brentley LaFoy

Phone: (432) 934-1529 **(Home)**

Address: 1506 North D Street

(Business)

Midland TX 79701

Email: brentley@risegrouprealestate.com

(City) (State) (Zip)

I am [✔] **I am not** [ ] **a U.S. Citizen**

Please tell us about yourself:

Are you a graduate of Midland 101? [ ] **yes** [✔] **no**

I have lived in Midland 24 **years.**

Occupation: Self-Employed

Professional and/or Community Activities:

Young Professionals of Midland

Young Professionals Network - Realtors

TREPAC Committee

What is your personal vision for the City?

I want Midland to thrive with innovation and sustainability. It's not just about oil and gas anymore; Education should be a priority, making sure our schools get the resources they need and giving everyone in our community chances to learn throughout their lives. We need to make sure our city grows in a smart way that meets the needs of everyone who lives here.

Please specify any time constraints you may have.

I work part time for David H. Arrington Oil and Gas, I am a Real Estate agent with Fathom Realty, and I run a small local snow cone stand. These are time constraints that I may have.

Please list below the Board(s) or Commission(s) on which you are interested in serving:

(You can find a complete and current list on the City's website at www.midlandtexas.gov**)**

(1) Name of Board/Commission:

Planning and Zoning

Airport Zoning Board of Adjustment & Zoning Board of Adjustment

Please tell us why you are interested in serving on this board or commission.

I care about planning and zoning because it affects how our neighborhoods and cities grow, I want to contribute by helping make sure its done responsibly for our community. It also means making sure everyone's voices are heard and that we all have a fair

say in how things develop around us.

What contribution would you most like to make?

As a young and driven individual, I aim to learn and contribute to my community. With my background in real estate, I seek to sharpen my skills through this committee and bring added value to my community. My goal is to make contributions by assisting in shaping the future of Midland.

Additional pertinent information or references:

Derek Whiting

Bobby Burns

David H. Arrington

(2) Name of Board/Commission:

What contribution would you most like to make?

Additional pertinent information or references:

Applications are maintained on file in the City Secretary's office for a period of one year. Should you need additional information, please call us at 432-685-7430.

Signature of Applicant

B LaFoy

Applications may be submitted online via email or print in order to send by mail or fax:

City of Midland
City Secretary's Office
PO Box 1152
Midland, TX 79702
FAX: (432) 685-7433

Submit Via Email

Print Application

APPLICATION FOR CITY OF MIDLAND BOARDS/COMMISSIONS/COMMITTEES

As an applicant for a City board, commission, or committee, please be advised that all information on this application is subject to the Texas Open Records Act and will be available to the public.

PLEASE TYPE OR PRINT CLEARLY:

Date: 7/2/2024

Name: Dustin Johnson

Phone: 432-889-3855 **(Home)**

Address: 700 McDonald St

_____ **(Business)**

Midland Tx 79703

Email: dustyjoe2006@gmail.com

(City) (State) (Zip)

I am [✓] **I am not** [ ] **a U.S. Citizen**

Please tell us about yourself:

Are you a graduate of Midland 101? [ ] **yes** [✓] **no**

I have lived in Midland 32 **years.**

Occupation: Architctural Draftsman

Professional and/or Community Activities:

Founder and President of The Midland Skatepark Association

What is your personal vision for the City?

To improove the parks and recreations for our community and get it on the scale of some of the other bigger cities tha have top tier Green Spaces. But most importantly focus on the group that goes ignored and that is the action sports community. We could have future olympic athletes out there and we all know Midland is proud of thier Olympic Athletes.

Please specify any time constraints you may have.

As long as i have a heads up my emploter will be ok i can let them know and adjust my schedule to attend meetings.

Please list below the Board(s) or Commission(s) on which you are interested in serving:

(You can find a complete and current list on the City's website at *www.midlandtexas.gov*)

(1) Name of Board/Commission:

Parks and Recs Commision

Please tell us why you are interested in serving on this board or commission.

The action sports community needs a voice in city leadership and planning and i have been that voice since 2018 and feel this would be a great fit for me

What contribution would you most like to make?

Fresh set of eyes to parks and green space concepts i have spent a tremindous amount of time traveling to big cities and love to enjoy their parks and green spaces and i feel i could bring that here.

Additional pertinent information or references:

Ive been wanting to be on this board for quite some time and feel like it needs a positive shake up to make things flow better

(2) Name of Board/Commission:

What contribution would you most like to make?

Additional pertinent information or references:

Applications are maintained on file in the City Secretary's office for a period of one year. Should you need additional information, please call us at 432-685-7430.

Signature of Applicant

Dustin Johnson

Applications may be submitted online via email or print in order to send by mail:

City of Midland

City Secretary's Office

PO Box 1152

Midland, TX 79702

Submit Via Email

Print Application

MIDLAND
Feel the Energy!

APPLICATION FOR CITY OF MIDLAND BOARDS/COMMISSIONS/COMMITTEES

As an applicant for a City board, commission, or committee, please be advised that all information on this application is subject to the Texas Open Records Act and will be available to the public.

PLEASE TYPE OR PRINT CLEARLY:

Name: Marion Bryant

Address: 5206 Lavaca Avenue

Midland, TX 79707

(City) (State) (Zip)

Date: 6/12/2024

Phone: 432-693-6652 **(Home)**

432-253-8972 **(Business)**

Email: marionbryant51@yahoo.com

I am ☑ **I am not** ☐ **a U.S. Citizen**

Please tell us about yourself:

I have lived in Midland 16 **years.**

Are you a graduate of Midland 101? ☑ **yes** ☐ **no**

Occupation: Senior Vice President & Trust Officer - SouthWest B

Professional and/or Community Activities:

Permian Basin CPA Society; Boards of Hospice of Midland and Hospice of Midland Endowment; Chaplain and Financial Secretary for the Negro Business & Professional Women Club of Midland; Republican Women of Midland member; Midland Business and Estat Council (MOBEC); Midland Rotary Club;

What is your personal vision for the City?

Midland is a thriving community that has shown itself to be resourceful and forward-thinking. My vision is for the City to be able to overcome the negative stereotypes of an O&G town. It does need to do more to attract young people and families who want to stay here to rear their families and contribute to Midland's health and well-being. I want to be a part of that growth and longevity.

Please specify any time constraints you may have.

Other than a couple of monthly (HOM) and quarterly (HOME) meetings at noon, I can arrange my time for the committees on which I could be appointed to serve for the duration of the terms.

Please list below the Board(s) or Commission(s) on which you are interested in serving:

(You can find a complete and current list on the City's website at *www.midlandtexas.gov*)

(1) Name of Board/Commission:

Animal Control Advisory Commission;

Parks and Recreation Commission

Permian Basin Community Center for MH/MR

Please tell us why you are interested in serving on this board or commission.

I want to learn more about the services of each organization listed above and how the community can better understand the services offered and the help available for not only the MH/MR community but also for those who can't speak for themselves

(the animals).

What contribution would you most like to make?

We've lived many places in our married life but have not been able to contribute much towards the betterment of our communities. Now, I have the time and the ability to be committed to whatever work is necessary to make Midland the best possible place to attract and keep businesses and families.

Additional pertinent information or references:

I've combined my interest in serving on the three Boards/Commissions in #1 and all the information on my contribution is applicable to each organization.

(2) Name of Board/Commission:

What contribution would you most like to make?

Additional pertinent information or references:

Applications are maintained on file in the City Secretary's office for a period of one year. Should you need additional information, please call us at 432-685-7430.

Signature of Applicant

Marion Bryant

Applications may be submitted online via email or print in order to send by mail:

City of Midland
City Secretary's Office
PO Box 1152
Midland, TX 79702

Submit Via Email

Print Application

APPLICATION FOR CITY OF MIDLAND BOARDS/COMMISSIONS/COMMITTEES

As an applicant for a City board, commission, or committee, please be advised that all information on this application is subject to the Texas Open Records Act and will be available to the public.

PLEASE TYPE OR PRINT CLEARLY:

Date: 3/28/2024

Name: Joy L. Paulson

Phone: 432-638-4473 **(Home)**

Address: 1001 N Garfield

432-688-7745 **(Business)**

Midland TX 79701

Email: jpaulson@keepmidlandbeautiful.org

(City) (State) (Zip)

I am ☑ **I am not** ☐ **a U.S. Citizen**

Please tell us about yourself:

Are you a graduate of Midland 101? ☐ **yes** ☑ **no**

I have lived in Midland 37 **years.**

Occupation: Executive Director Keep Midland Beautiful

Professional and/or Community Activities:

Worked at Midland Memorial in Information Technology from 1998-2023 - Presently Executive Director of Keep Midland Beautiful

Served on the United Way Allocation Panel for 7 years.

What is your personal vision for the City?

As a long time volunteer, board member and now Executive Director of Keep Midland Beautiful - I see the transformations the community has grown into and continues to grow. My personal vision would to see our community also grow into more mindfullness of litter prevention, water conservation and expanding on our minimal recycling programs and options. I would like to bring that educa

Please specify any time constraints you may have.

Once a month - every second Tuesday of the month I have Executive Committee and Board of Directors meetings

Please list below the Board(s) or Commission(s) on which you are interested in serving:

(You can find a complete and current list on the City's website at *www.midlandtexas.gov*)

(1) Name of Board/Commission:

Planning and Zoning Commission

Please tell us why you are interested in serving on this board or commission.

It will give me an opprotunity to contribute to the future vision and direction of our community and to serve as a partnered leader for the betterment of our community. It's opportunity to also see diverse points of views and step out of the comfort zone

What contribution would you most like to make?

An opprotunity to make our community better with right things in the right places that will have a positive impact on our city. I would be honored and humbled to be apart of that impact

Additional pertinent information or references:

I am signed up to attend the next Midland 101

(2) Name of Board/Commission:

Parks and Recreation

What contribution would you most like to make?

To be an advocate to all that enjoy our parks recreation facilities by helping to maintain the safety, improvement and a voice to future developments.

Additional pertinent information or references:

Applications are maintained on file in the City Secretary's office for a period of one year. Should you need additional information, please call us at 432-685-7430.

Signature of Applicant

Jay L. Pawlow

Applications may be submitted online via email or print in order to send by mail:

City of Midland

City Secretary's Office

PO Box 1152

Midland, TX 79702

Print Application

APPLICATION FOR CITY OF MIDLAND BOARDS/COMMISSIONS/COMMITTEES

As an applicant for a City board, commission, or committee, please be advised that all information on this application is subject to the Texas Open Records Act and will be available to the public.

PLEASE TYPE OR PRINT CLEARLY:

Date: 6/6/2024

Name: Brittany Halbert

Phone: 432-528-4317 **(Home)**

Address: 910 Almont Place

432-688-1370 **(Business)**

Midland TX 79705

Email: bhalbert@lcalawfirm.com

(City) (State) (Zip)

I am ☑ **I am not** ☐ **a U.S. Citizen**

Please tell us about yourself:

Are you a graduate of Midland 101? ☐ **yes** ☑ **no**

I have lived in Midland 10 **years.**

Occupation: HR Director, Lynch, Chappell & Alsup

Professional and/or Community Activities:

I am HR Director & Adminstrator at Lynch, Chappell & Alsup and just completed Year 1 of Leadership Midland. I am involved in Midland Panhellenic, Midland Christian School, and the Midland Chapter of Chi Omega Alumni. I currently volunteer with Boys and Girls Club, American Cancer Society and the United Way.

What is your personal vision for the City?

I love Midland and am proud of our city. I believe Midland is important to the world and to the global economy but must be invested in and cared for by our citizens on a local level. I am encouraged to see the progress that has been made as Midland invests in Midland, and I want to do my part to facilitate growth, conversation and pride in our community.

Please specify any time constraints you may have.

None.

Please list below the Board(s) or Commission(s) on which you are interested in serving:

(You can find a complete and current list on the City's website at www.midlandtexas.gov)

(1) Name of Board/Commission:

Parks & Recreation Commission

Please tell us why you are interested in serving on this board or commission.

As a parent of two young boys, I invest a lot of time at many of our local parks and understand the community investment. I want to continue to be the eyes, hands and mouth for the city to continue efforts and progress.

What contribution would you most like to make?

I want to apply my business acument to review projects and plans that impact our city and citizens. As a business leader and as parent, I feel I have practical knowledge, realistic application and enthusiasm to contribute to the future of our community.

Additional pertinent information or references:

At Leadership Midland, we learned of the volume and geographic spread of the city's investment and some of the "how to's". Understanding the online process allowed me to submit a request for Butler park as TBall season began. The request was completec within days. It was easy to explain to other parents that we can easily enact change if we are working on behalf of our community.

(2) Name of Board/Commission:

What contribution would you most like to make?

Additional pertinent information or references:

Applications are maintained on file in the City Secretary's office for a period of one year. Should you need additional information, please call us at 432-685-7430.

Signature of Applicant



Applications may be submitted online via email or print in order to send by mail:

City of Midland

City Secretary's Office

PO Box 1152

Midland, TX 79702

Submit Via Email

Print Application

MIDLAND
Feel the Energy!

APPLICATION FOR CITY OF MIDLAND BOARDS/COMMISSIONS/COMMITTEES

As an applicant for a City board, commission, or committee, please be advised that all information on this application is subject to the Texas Open Records Act and will be available to the public.

PLEASE TYPE OR PRINT CLEARLY:

Date: 7-30-2024

Name: Daniel S. NORWOOD

Phone: 682-5544 (Home)

618-5012 (Business)

Address: 1705 MABERRY

Email: danny@dannynorwood.com

MIDLAND TX. 79705

(City) (State) (Zip)

I am [✓] I am not [ ] a U.S. Citizen

Please tell us about yourself:

I have lived in Midland 66 years.

Are you a graduate of Midland 101? [✓] yes [ ] no

* I was in the class when COVID happened so it never finished.

Occupation: Realtor

Professional and/or Community Activities:

Past Board Member of Big Brothers, Heart Assoc, Cancer, Center for Battered Women. Current Member of MCVTD which I was asked to join after Midland 101 was disbanded b/c of COVID. Also served on Allocation committee for CVB a few years ago.

What is your personal vision for the City?

TO continue to watch it grow & attract new businesses for everyone to enjoy.

Please specify any time constraints you may have.

NONE - FYI I came back to Midland in Aug of 81 after graduating from UT-Austin & was on the Boards mentioned above until Fall of 1992 when my wife & I started our family.

Please list below the Board(s) or Commission(s) on which you are interested in serving:

(You can find a complete and current list on the City's website at www.midlandtexas.gov)

(1) Name of Board/Commission:

Animal Control

Please tell us why you are interested in serving on this board or commission.

I own 4 dogs, take great care of them & would like to see our pet population get under control.

What contribution would you most like to make?

FOR STAFFERS, VOLUNTEER TO WALK DOGS THAT CITY HAS IMPLEMENTED.

Additional pertinent information or references:

-

(2) Name of Board/Commission:

PARKS & RECREATION

What contribution would you most like to make?

MY KIDS GREW UP @ FASKEN PARK & IT HAS BEEN UPDATED MANY TIMES OVER THE YEARS. WOULD LIKE TO SEE OTHER PARKS GET UPDATED IN TIME.

Additional pertinent information or references:

-

Applications are maintained on file in the City Secretary's office for a period of one year. Should you need additional information, please call us at 432-685-7430.

Signature of Applicant

Daniel S. Norwood

Applications may be submitted online via email or print in order to send by mail:

City of Midland

City Secretary's Office

PO Box 1152

Midland, TX 79702

Submit Via Email

Print Application

APPLICATION FOR CITY OF MIDLAND BOARDS/COMMISSIONS/COMMITTEES

As an applicant for a City board, commission, or committee, please be advised that all information on this application is subject to the Texas Open Records Act and will be available to the public.

PLEASE TYPE OR PRINT CLEARLY:

Date: 8/9/2024

Name: Max Kilgore

Phone: 432-556-1947 **(Home)**

Address: 210 Club Drive **(Business)**

Midland TX 79701

Email: maxkilgore@icloud.com

(City) (State) (Zip)

I am ☑ **I am not** ☐ **a U.S. Citizen**

Please tell us about yourself:

Are you a graduate of Midland 101? ☐ **yes** ☑ **no**

I have lived in Midland 6 **years.**

Occupation: Lease Operator

Professional and/or Community Activities:

Stonegate Small Group, Regular open mic participant at The Destination

What is your personal vision for the City?

To continue to evolve Midland into a thriving, sustainable and diversified city that honors our oil and gas legacy while embracing innovaion, community wellness, and enviromental stewardship.

Please specify any time constraints you may have.

N/A

Please list below the Board(s) or Commission(s) on which you are interested in serving:

(You can find a complete and current list on the City's website at www.midlandtexas.gov)

(1) Name of Board/Commission:

Parks and Recreation Advisory Board

Please tell us why you are interested in serving on this board or commission.

What contribution would you most like to make?

I would like to maximize and upgrade existing infrastructure in a fiscally responsible way.

Additional pertinent information or references:

(2) Name of Board/Commission:

What contribution would you most like to make?

Additional pertinent information or references:

Applications are maintained on file in the City Secretary's office for a period of one year. Should you need additional information, please call us at 432-685-7430.

Signature of Applicant

Applications may be submitted online via email or print in order to send by mail:

City of Midland

City Secretary's Office

PO Box 1152

Midland, TX 79702

Submit Via Email

Print Application

MIDLAND
Feel the Energy!

APPLICATION FOR CITY OF MIDLAND BOARDS/COMMISSIONS/COMMITTEES

As an applicant for a City board, commission, or committee, please be advised that all information on this application is subject to the Texas Open Records Act and will be available to the public.

PLEASE TYPE OR PRINT CLEARLY:

Date: 8/9/2024

Name: MyRon McGee

Phone: 432-312-2699 (Home)

Address: 709 Dellwood St.

_____ (Business)

Midland TX 79707

(City) (State) (Zip)

Email: ~~Myronmcgee~~ ~~myron mcgee~~ myronmcgee@gmail.com

I am [X] I am not [ ] a U.S. Citizen

Are you a graduate of Midland 101? [ ] yes [X] no

Please tell us about yourself:

I have lived in Midland 8 years.

Occupation: Graduate Student

Professional and/or Community Activities:

Alpha Phi Alpha Fraternity Incorporated
Midland Masonic Lodge

What is your personal vision for the City?

My vision for the city is to continue infrastructure improvements and make Midland an environment for young people + young families to thrive.

Please specify any time constraints you may have.

Please list below the Board(s) or Commission(s) on which you are interested in serving:

(You can find a complete and current list on the City's website at www.midlandtexas.gov)

(1) Name of Board/Commission:

Animal Control Advisory Commission

Please tell us why you are interested in serving on this board or commission.

I'm an animal lover + want to be in a position to aid this commission in making great decisions that benefit Midland + the Midland Animal Shelter.

What contribution would you most like to make?

I would like to be a positive voice & represent the younger city constituency.

Additional pertinent information or references:

Morris Williams - Deputy City Manager

(2) Name of Board/Commission:

Parks & Recreation; Midland Spaceport and Development Corporation

What contribution would you most like to make?

I frequent Midland parks and would use my personal experiences to suggest improvements, talk with neighbors, and continue to ensure they are safe and clean.

Additional pertinent information or references:

Applications are maintained on file in the City Secretary's office for a period of one year. Should you need additional information, please call us at 432-685-7430.

Signature of Applicant

Applications may be submitted online via email or print in order to send by mail or fax:

City of Midland
City Secretary's Office
PO Box 1152
Midland, TX 79702
FAX: (432) 685-7433

Submit Via Email

Print Application

APPLICATION FOR CITY OF MIDLAND BOARDS/COMMISSIONS/COMMITTEES

As an applicant for a City board, commission, or committee, please be advised that all information on this application is subject to the Texas Open Records Act and will be available to the public.

PLEASE TYPE OR PRINT CLEARLY:

Date: 7/26/2024

Name: K. Bryan Reeves

Phone: 432 413-4052 **(Home)**

Address: 2008 Harvard Ave. 432 413-4052 **(Business)**

Midland, TX 79701

(City) (State) (Zip)

Email: kbr549oil@gmail.com

I am [✓] **I am not** [ ] **a U.S. Citizen**

Please tell us about yourself:

Are you a graduate of Midland 101? [ ] **yes** [✓] **no**

I have lived in Midland 65 **years.**

Occupation: Retired

Professional and/or Community Activities:

Independent Landman for over 30 years. Member of the PBLA.

What is your personal vision for the City?

To see it grow responsibly

Please specify any time constraints you may have.

None

Please list below the Board(s) or Commission(s) on which you are interested in serving:

(You can find a complete and current list on the City's website at www.midlandtexas.gov)

(1) Name of Board/Commission:

Airport Planning and Development Board

Please tell us why you are interested in serving on this board or commission.

As current aircraft owner and former pilot I am interested in development of airport operations. As a lifelong Midland resident I want to insure facilities maintained for future generations.

What contribution would you most like to make?

Would like to see the airports developed properly.

Additional pertinent information or references:

My son, K Weston Reeves, was a former board member of the Airport Planning and Development Board.

(2) Name of Board/Commission:

What contribution would you most like to make?

Additional pertinent information or references:

Applications are maintained on file in the City Secretary's office for a period of one year. Should you need additional information, please call us at 432-685-7430.

Signature of Applicant

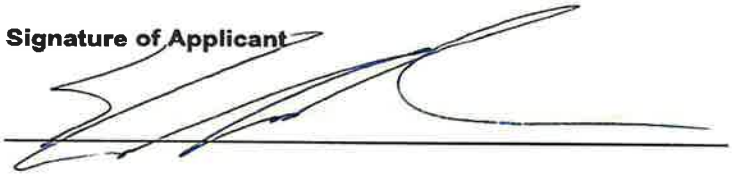

Applications may be submitted online via email or print in order to send by mail:

City of Midland

City Secretary's Office

PO Box 1152

Midland, TX 79702

Submit Via Email

Print Application

MIDLAND
Feel the Energy!

APPLICATION FOR CITY OF MIDLAND BOARDS/COMMISSIONS/COMMITTEES

As an applicant for a City board, commission, or committee, please be advised that all information on this application is subject to the Texas Open Records Act and will be available to the public.

PLEASE TYPE OR PRINT CLEARLY:

Name: Wesley Arrambide

Address: 2303 Seaboard Ave

Midland TX 79705

(City) (State) (Zip)

Date: 6/25/2024

Phone: 281-919-8600 **(Home)**

(Business)

Email: warrambide@hotmail.com

I am [✓] **I am not** [ ] **a U.S. Citizen**

Are you a graduate of Midland 101? [ ] **yes** [✓] **no**

Please tell us about yourself:

I have lived in Midland 4 **years.**

Occupation: Oil & Gas Professional

Professional and/or Community Activities:

As a transplant to the city of Midland I am now in a position to have an impact in the future development of the city for residents. I transferred to Midland in 2019 with Oxy from the Houston area and for the past 2 years have worked with ConocoPhillips and have seen the contribution from COP to our community and would like to contribute.

What is your personal vision for the City?

For the City of Midland to continue to grow and prosper.

Please specify any time constraints you may have.

No time constraints during the work week.

Please list below the Board(s) or Commission(s) on which you are interested in serving:

(You can find a complete and current list on the City's website at *www.midlandtexas.gov***)**

(1) Name of Board/Commission:

Airport Planning and Development Board

Please tell us why you are interested in serving on this board or commission.

As a transplant from Houston my family and i frequently fly through MAF and believe i could contribute to the future planning and development.

What contribution would you most like to make?

To give the best advice from a frequent user of MAF and contribute to it's growth as the city continues to grow.

Additional pertinent information or references:

Chuck Blumenauer - Former Midland Fire Chief

Russell Meyers - Former CEO Midland Memorial

(2) Name of Board/Commission:

What contribution would you most like to make?

Additional pertinent information or references:

Applications are maintained on file in the City Secretary's office for a period of one year. Should you need additional information, please call us at 432-685-7430.

Signature of Applicant



Applications may be submitted online via email or print in order to send by mail:

City of Midland

City Secretary's Office

PO Box 1152

Midland, TX 79702

Submit Via Email

Print Application

APPLICATION FOR CITY OF MIDLAND BOARDS/COMMISSIONS/COMMITTEES

As an applicant for a City board, commission, or committee, please be advised that all information on this application is subject to the Texas Open Records Act and will be available to the public.

PLEASE TYPE OR PRINT CLEARLY:

Date: 7/29/2024

Name: RobRoy McDonald

Phone: 210.323.8685 **(Home)**

Address: PO Box 2452 **(Business)**

Midland TX 79702

Email: goneflyfishing@hotmail.com

(City) (State) (Zip)

I am [✓] **I am not** [ ] **a U.S. Citizen**

Please tell us about yourself:

Are you a graduate of Midland 101? [✓] **yes** [ ] **no**

I have lived in Midland 17 **years.**

Occupation: Landman

Professional and/or Community Activities:

VP of Land, Deep Blue; Active member of PBLA since 2007; AAPL; Served on various advisory boards at Midland Country Club

What is your personal vision for the City?

Continued growth efforts in industry, housing, professional and leisure

Please specify any time constraints you may have.

none

Please list below the Board(s) or Commission(s) on which you are interested in serving:

(You can find a complete and current list on the City's website at www.midlandtexas.gov)

(1) Name of Board/Commission:

Airport Planning and Development Board: (Advisory)

Please tell us why you are interested in serving on this board or commission.

Our airports are the most important bairt for luring talent into Midland. More talent in the Permian Basin tuirns into more opportunities for industry growth, which then trickles down into more leisure activity for our citizens.

What contribution would you most like to make?

Insert a new voice to the conversation and disseminate that information to our citizens.

Additional pertinent information or references:

(2) Name of Board/Commission:

What contribution would you most like to make?

Additional pertinent information or references:

Applications are maintained on file in the City Secretary's office for a period of one year. Should you need additional information, please call us at 432-685-7430.

Signature of Applicant



Applications may be submitted online via email or print in order to send by mail:

City of Midland

City Secretary's Office

PO Box 1152

Midland, TX 79702

Submit Via Email

Print Application

APPLICATION FOR CITY OF MIDLAND BOARDS/COMMISSIONS/COMMITTEES

As an applicant for a City board, commission, or committee, please be advised that all information on this application is subject to the Texas Open Records Act and will be available to the public.

PLEASE TYPE OR PRINT CLEARLY:

Date: 6/10/2024

Name: David Tryson

Phone: 4326344257 **(Home)**

4326825355 **(Business)**

Address: 2812 Fannin Avenue

Midland TX 79705

(City) (State) (Zip)

Email: davidpaultryson@outlook.com

I am [✓] **I am not** [ ] **a U.S. Citizen**

Please tell us about yourself:

Are you a graduate of Midland 101? [ ] **yes** [✓] **no**

I have lived in Midland 40 **years.**

Occupation: Assistant Operations Manager-TCO Field Serv. Inc.

Professional and/or Community Activities:

I am Secretary/Treasurer for the Midland Air and Spaceport Development Corp. I have business ties to the City. I have experience in the airline industry. I was a volunteer for the Show of Support for more than 15 years

What is your personal vision for the City?

Midland is growing like never before. I have seen businesses start here from other cities and made Midland their home. Midland is the Capital of the oil/energy industry. I can only see Midland growing even more within the next 10 to 20 years. I'd love to be a part of that growth with my experience, and also learning more about city operations.

Please specify any time constraints you may have.

I have no constraints

Please list below the Board(s) or Commission(s) on which you are interested in serving:

(You can find a complete and current list on the City's website at *www.midlandtexas.gov*)

(1) Name of Board/Commission:

Midland Airport Board

Please tell us why you are interested in serving on this board or commission.

My father worked for American Airlines for 40 years, I am an aviation enthusist. I am in process of obtaining my private pilot's license. I worked for AA for 5 years at MAF, I was there when the current aiport terminal opended on 1999-2000

What contribution would you most like to make?

My loyalty to the board, my limited background, but mostly my leadership and management background.

Additional pertinent information or references:

Frank Kisner-808-494-8101

Mike Williams 432-634-8813

David Criner (Sheriff) 432-230-8767

(2) Name of Board/Commission:

What contribution would you most like to make?

Additional pertinent information or references:

Applications are maintained on file in the City Secretary's office for a period of one year. Should you need additional information, please call us at 432-685-7430.

Signature of Applicant

Applications may be submitted online via email or print in order to send by mail:

City of Midland

City Secretary's Office

PO Box 1152

Midland, TX 79702

Submit Via Email

Print Application

APPLICATION FOR CITY OF MIDLAND BOARDS/COMMISSIONS/COMMITTEES

As an applicant for a City board, commission, or committee, please be advised that all information on this application is subject to the Texas Open Records Act and will be available to the public.

PLEASE TYPE OR PRINT CLEARLY:

Date: 7/29/2024

Name: Gary Gray

Phone: 432-352-7552 **(Home)**

Address: 4309 Greenville Dr

432-221-5103 **(Business)**

Midland TX 79707

Email: garygray@me.com

(City) (State) (Zip)

I am ☑ **I am not** ☐ **a U.S. Citizen**

Please tell us about yourself:

Are you a graduate of Midland 101? ☑ **yes** ☐ **no**

I have lived in Midland 27 **years.**

Occupation: Physical Therapist / business owner

Professional and/or Community Activities:

previous - Midland Zoning/Airport Board of Adjustment / Teen Flow Board of Directors (President) / Midland Children's Rehab Center Medical Advisory Board / Green Tree Country Club Board (President) / Texas Board of Physical Therapy Examiners (Chair) /

current - Green Tree Country Club Board of Governors / His Appointed Time Ministries Board of Directors

What is your personal vision for the City?

To move forward with improved facilites across the City as we cater to our citizens. This include parks, restaurants, shopping and travel, part of which is the ability to conveniently and easily get to and from Midland by air.

Please specify any time constraints you may have.

None

Please list below the Board(s) or Commission(s) on which you are interested in serving:

(You can find a complete and current list on the City's website at *www.midlandtexas.gov*)

(1) Name of Board/Commission:

Airport Planning and Development Board

Please tell us why you are interested in serving on this board or commission.

As someone who flies in and out of MAF almost weekly and pays great attention to small details, I feel that I can offer constructive input from a frequent user perspective as we strive to make our airport one of the best of its size.

What contribution would you most like to make?

Contribute to the betterment of travel in and out of Midland. While West Texas isn't beautiful, it has great opportunities and is a great place to live. One enticement however is the ease of traveling in and out by air travel whether private or commercial, and that experience needs to be the best it can possibly be.

Additional pertinent information or references:

References - Stephen Bowerman, President and CEO of Midland Memorial Hospital / Patrick Payton, former Mayor of Midland / Tom Craddick, Texas House of Representatives

(2) Name of Board/Commission:

What contribution would you most like to make?

Additional pertinent information or references:

Applications are maintained on file in the City Secretary's office for a period of one year. Should you need additional information, please call us at 432-685-7430.

Signature of Applicant

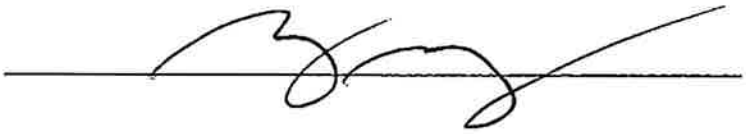

Applications may be submitted online via email or print in order to send by mail:

City of Midland

City Secretary's Office

PO Box 1152

Midland, TX 79702

Submit Via Email

Print Application

MIDLAND
Feel the Energy!

APPLICATION FOR CITY OF MIDLAND BOARDS/COMMISSIONS/COMMITTEES

As an applicant for a City board, commission, or committee, please be advised that all information on this application is subject to the Texas Open Records Act and will be available to the public.

PLEASE TYPE OR PRINT CLEARLY:

Date: 8/7/2024

Name: Steven C. Price

Phone: 432-570-6903 **(Home)**

Address: 3905 S. County Road 1184

432-664-2832 **(Business)**

Midland. Texas 79706

Email: steveprice@suddenlink.net

(City) (State) (Zip)

I am [✔] **I am not** [ ] **a U.S. Citizen**

Please tell us about yourself:

Are you a graduate of Midland 101? [ ] **yes** [✔] **no**

I have lived in Midland 42 **years.**

Occupation: Retired

Professional and/or Community Activities:

After working over 40 years in the oil & gas industry, I was forced into retirement during the Covid epidemic. I've spent the last few years working on retirement projects that I had been planning to do, but now I would like to get more involved in our community.

What is your personal vision for the City?

When I first came to Midland, over 50 years ago, the first thing I saw was Midland Airport. It wasn't even 'International' then. Now it's a Space Port! I wonder how many people can say that MAF left them with their first impression of Midland. We have a lot to be proud of, from the Pliska airplane to being a Space Port. I want to play a role in the continuing progress of our airport!

Please specify any time constraints you may have.

I spend about one week per month in Phoenix, caring for my elderly cousin. I set my own travel schedule, so this should not be a problem.

Please list below the Board(s) or Commission(s) on which you are interested in serving:

(You can find a complete and current list on the City's website at *www.midlandtexas.gov***)**

(1) Name of Board/Commission:

Airport Planning and Development Board

Please tell us why you are interested in serving on this board or commission.

I've been a pilot for 50 years, I've owned several airplanes. I used to fly charter flights and did flight instruction at MAF. I based one of my airplanes there. I don't currently fly, but plan to get back into it when I finish restoration of my airplane. I've always been

interested in all facets of aviation.

What contribution would you most like to make?

Being retired, I will find time to meet many people at both airports. I think everyone from Security, to Fire Dept. to airlines, to FBOs, car rental agencies, maintenance shops, MC A&P school, parking lot, building & grounds maintenance, CAF, air traffic control, etc. all probably have some ideas on how to make our airports even better.

Additional pertinent information or references:

Membership in Aircraft Owners & Pilots Association, Experimental Aircraft Association, American Navion Society.

Patricia Darby (Manager - MAF Air Traffic Control Tower, Retired, and former Board Member), 432-413-1548

Don Haeffner (Quality Avionics), 432-553-4462

(2) Name of Board/Commission:

What contribution would you most like to make?

Additional pertinent information or references:

Applications are maintained on file in the City Secretary's office for a period of one year. Should you need additional information, please call us at 432-685-7430.

Signature of Applicant

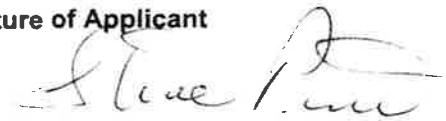

Applications may be submitted online via email or print in order to send by mail:

City of Midland

City Secretary's Office

PO Box 1152

Midland, TX 79702

Submit Via Email

Print Application

APPLICATION FOR CITY OF MIDLAND BOARDS/COMMISSIONS/COMMITTEES

As an applicant for a City board, commission, or committee, please be advised that all information on this application is subject to the Texas Open Records Act and will be available to the public.

PLEASE TYPE OR PRINT CLEARLY:

Date: 8/9/2024

Name: Tom Segulja

Phone: 432-238-2516 **(Home)**

Address: 3304 Northfield Dr

432-682-4349, x 4102 **(Business)**

Midland TX 79707

Email: tom.segulja@gmail.com

(City) (State) (Zip)

I am [✔] **I am not** [ ] **a U.S. Citizen**

Please tell us about yourself:

Are you a graduate of Midland 101? [ ] **yes** [✔] **no**

I have lived in Midland 43 **years.**

Occupation: Landman

Professional and/or Community Activities:

Member, Past President - Rotary Club of Midland

Christmas in Action volunteer; West Texas Food Bank volunteer

What is your personal vision for the City?

To see Midland continue to grow as the leader of the Permian Basin in Energy. Let Texas and others see the great asset it is to Texas and the U.S.

To grow the Spaceport by educating people on it's existence and value.

Please specify any time constraints you may have.

Possible occasional job conflicts, but I seldom am out of Midland.

Please list below the Board(s) or Commission(s) on which you are interested in serving:

(You can find a complete and current list on the City's website at www.midlandtexas.gov)

(1) Name of Board/Commission:

Airport Planning and Development Board

Please tell us why you are interested in serving on this board or commission.

I am an Air Force Academy graduate with an Air Force background, 25 years as a small business owner (Snowhite Linen Service) in Midland. 17 years as a Landman. Our airports are a Gateway for businesses to see Midland, and the Permian Basin to help grow

our City and area as efficiently as possible,

What contribution would you most like to make?

Bring the Spaceport more into the public's eye to help it grow.

Additional pertinent information or references:

Robin Donnelly

Adrian Carrasco

Scott Betton

(2) Name of Board/Commission:

What contribution would you most like to make?

Additional pertinent information or references:

Applications are maintained on file in the City Secretary's office for a period of one year. Should you need additional information, please call us at 432-685-7430.

Signature of Applicant

Thomas Legg

Applications may be submitted online via email or print in order to send by mail:

City of Midland

City Secretary's Office

PO Box 1152

Midland, TX 79702

Submit Via Email

Print Application

MIDLAND
Feel the Energy!

APPLICATION FOR CITY OF MIDLAND BOARDS/COMMISSIONS/COMMITTEES

As an applicant for a City board, commission, or committee, please be advised that all information on this application is subject to the Texas Open Records Act and will be available to the public.

PLEASE TYPE OR PRINT CLEARLY:

Date: 6/21/2024

Name: Amanda Herd

Phone: 432-818-4090 **(Home)**

Address: 6510 Hall of Fame Blvd. **(Business)**

Midland TX 79706

(City) (State) (Zip)

Email: amanda.herd@plains.com

I am [✔] **I am not** [ ] **a U.S. Citizen**

Please tell us about yourself:

Are you a graduate of Midland 101? [ ] **yes** [✔] **no**

I have lived in Midland 1 **years.**

Occupation: Emergency Response & Security Management Spe

Professional and/or Community Activities:

I volunteer at Midland Baptist Crisis Center, Mission Agape and Fields Edge

I attend Idle Hand's Ministry and Redeemer Church

What is your personal vision for the City?

As a lover of animals, my passion is to assist with the overpopulation of dogs and cats in Midland. I would like to be apart of this boa

My personal goal is to assist and volunteer with Fix West Texas.

Please specify any time constraints you may have.

I work a full-time position at Plains All American Pipeline. 7am- 4pm Monday thru Friday.

Please list below the Board(s) or Commission(s) on which you are interested in serving:

(You can find a complete and current list on the City's website at *www.midlandtexas.gov)*

(1) Name of Board/Commission:

I am currently serving on the Political Action Commitee for my company, Plains. I have the opportunity to meet with local U.S. repres

representative, August Lenzer, this year. I will be able to share my dreams and goals for Midland.

Please tell us why you are interested in serving on this board or commission.

I want to bring my vision to life. I know Midland has the resources to assist our local community.

What contribution would you most like to make?

With a regulatory and compliance background. I am familiar on Texas state regulations and ordinances.

Additional pertinent information or references:

Karen Ward, Governmental Affairs with Plains

(2) Name of Board/Commission:

N/A

What contribution would you most like to make?

N/A

Additional pertinent information or references:

N/A

Applications are maintained on file in the City Secretary's office for a period of one year. Should you need additional information, please call us at 432-685-7430.

Signature of Applicant

Amanda Rodriguez

Applications may be submitted online via email or print in order to send by mail:

City of Midland

City Secretary's Office

PO Box 1152

Midland, TX 79702

Print Application

APPLICATION FOR CITY OF MIDLAND BOARDS/COMMISSIONS/COMMITTEES

As an applicant for a City board, commission, or committee, please be advised that all information on this application is subject to the Texas Open Records Act and will be available to the public.

PLEASE TYPE OR PRINT CLEARLY:

Date: 6/21/2024

Name: Camille Bryant

Phone: 432.250.5056 **(Home)**

Address: 5509 Highland Ct. 575.441.1099 **(Business)**

Midland (City) Texas (State) 79707 (Zip)

Email: camillebryant121@gamil.com

I am [✔] **I am not** [ ] **a U.S. Citizen**

Please tell us about yourself:

Are you a graduate of Midland 101? [ ] **yes** [✔] **no**

I have lived in Midland 15 **years.**

Occupation: Remediation Supervisor

Professional and/or Community Activities:

Professionally I strive to ensure Midland is an enviromentally safe place to reside. I've volunteered and contributed financially to several local animal shelters, as well as rescued several animals. My interest in applying for the animal control advisory board stems from my passion for the work these shelters do, and I want to provide them with better strategies and resources to be more effective.

What is your personal vision for the City?

To focus on meeting the needs of animals and pet owners, focus on fostering and rehoming of animals in order to reduce the number of euthanized animals. Provide assistance and support for animals in need and elevating their status in the community. Partner with local shelters and animal organization to create a system where unwanted animals are placed in loving homes..

Please specify any time constraints you may have.

I have a flexible work schedule, but typically work from 7:30 til 16:00 five days a week.

Please list below the Board(s) or Commission(s) on which you are interested in serving:

(You can find a complete and current list on the City's website at www.midlandtexas.gov)

(1) Name of Board/Commission:

Animal Control Advisory Board

Please tell us why you are interested in serving on this board or commission.

I am a citizen of Midland and an animal lover. By serving on the board I believe we can work together to reduce the number of stray animals roaming the city, reduce the number of animals being euthanized and provide all animals a chance for a healthy ,loving hom

What contribution would you most like to make?

To help Midland become a city that values all lives.

Additional pertinent information or references:

I believe all life is precious, and if given a chance, animals can enhance our lives by providing unconditional love and companionship

(2) Name of Board/Commission:

What contribution would you most like to make?

Additional pertinent information or references:

Applications are maintained on file in the City Secretary's office for a period of one year. Should you need additional information, please call us at 432-685-7430.

Signature of Applicant



Applications may be submitted online via email or print in order to send by mail:

City of Midland

City Secretary's Office

PO Box 1152

Midland, TX 79702

Submit Via Email

Print Application

MIDLAND
Feel the Energy!

APPLICATION FOR CITY OF MIDLAND BOARDS/COMMISSIONS/COMMITTEES

As an applicant for a City board, commission, or committee, please be advised that all information on this application is subject to the Texas Open Records Act and will be available to the public.

PLEASE TYPE OR PRINT CLEARLY:

Name: Betsy Brininstool

Address: 2503 Learmont Dr.

Midland TX 79705

(City) (State) (Zip)

Date: 6/21/2024

Phone: 432-889-4265 **(Home)**

(Business)

Email: santafekylie@hotmail.com

I am ☑ **I am not** ☐ **a U.S. Citizen**

Please tell us about yourself:

I have lived in Midland 41 **years.**

Are you a graduate of Midland 101? ☐ **yes** ☑ **no**

Occupation: Clinical Social Worker

Professional and/or Community Activities:

I have worked for Home Hospice for 24 year and I recently began a private counseling practice. My family and I are members of St. Ann's Church, where I serve on the Parish Pastoral Council.

What is your personal vision for the City?

My vision is to make Midland somewhere that people want to live and where animals are safe and cared for.

Please specify any time constraints you may have.

I set my schedule for both of my jobs, so I should not have any time constraints.

Please list below the Board(s) or Commission(s) on which you are interested in serving:

(You can find a complete and current list on the City's website at *www.midlandtexas.gov*)

(1) Name of Board/Commission:

Animal Control Advisory Board

Please tell us why you are interested in serving on this board or commission.

My family has fostered dogs and cats with various local rescues for over 20 years. With fostering, I have seen firsthand the ways in which pets are not always a priority in our community.

What contribution would you most like to make?

I feel like I have a unique viewpoint due to our years of fostering here in our city.

Additional pertinent information or references:

Lori VanHoozer, Fix West Texas, 469-855-3649

Laura Hollifield, founder of Animal Outreach Organization, 432-528-6880

(2) Name of Board/Commission:

What contribution would you most like to make?

Additional pertinent information or references:

Applications are maintained on file in the City Secretary's office for a period of one year. Should you need additional information, please call us at 432-685-7430.

Signature of Applicant

Betsy Birmingham

Applications may be submitted online via email or print in order to send by mail:

City of Midland

City Secretary's Office

PO Box 1152

Midland, TX 79702

Submit Via Email

Print Application

MIDLAND
Feel the Energy!

APPLICATION FOR CITY OF MIDLAND BOARDS/COMMISSIONS/COMMITTEES

As an applicant for a City board, commission, or committee, please be advised that all information on this application is subject to the Texas Open Records Act and will be available to the public.

PLEASE TYPE OR PRINT CLEARLY:

Date: 6/3/2024

Name: Sam F. Harrill

Phone: 432-559-5336 **(Home)**

Address: 712 W. Kansas Ave

_____ **(Business)**

Midland TX 79701

(City) (State) (Zip)

Email: sharrill@johnmclarkinc.com

I am ☑ **I am not** ☐ **a U.S. Citizen**

Please tell us about yourself:

Are you a graduate of Midland 101? ☐ **yes** ☑ **no**

I have lived in Midland 30 **years.**

Occupation: Geophysicist

Professional and/or Community Activities:

Owner High Plains Exploration Company (Inc) 30 years in Business

Volunteered 5 years at Helping Hands of Midland

Board Member Midland Community Ensembles

What is your personal vision for the City?

Zero Kill

Please specify any time constraints you may have.

Monday Evenings

Occasional Saturdays

Please list below the Board(s) or Commission(s) on which you are interested in serving:

(You can find a complete and current list on the City's website at *www.midlandtexas.gov*)

(1) Name of Board/Commission:

Animal Services Advisory Commission

Please tell us why you are interested in serving on this board or commission.

Promote a Zero Kill future and Responsible Pet Ownership

What contribution would you most like to make?

See Above

Additional pertinent information or references:

Jessica Todia, DVM (432) 425-3533

Mary Hardin, Helping Hands of Midland (432) 528-6265

Carol Savage, Cat Wrangle (432) 967-0653

(2) Name of Board/Commission:

What contribution would you most like to make?

Additional pertinent information or references:

Applications are maintained on file in the City Secretary's office for a period of one year. Should you need additional information, please call us at 432-685-7430.

Signature of Applicant



6/10/24

Applications may be submitted online via email or print in order to send by mail:

City of Midland

City Secretary's Office

PO Box 1152

Midland, TX 79702

Print Application

APPLICATION FOR CITY OF MIDLAND BOARDS/COMMISSIONS/COMMITTEES

As an applicant for a City board, commission, or committee, please be advised that all information on this application is subject to the Texas Open Records Act and will be available to the public.

PLEASE TYPE OR PRINT CLEARLY:

Date: 06/05/24

Name: Alexis Hope Gibson

Phone: 4322416526 **(Home)**

Address: 2413 Ranch Ave Midland, TX 79705 **(Business)**

Email: lexihopegibson@gmail.com

(City) (State) (Zip)

I am [✓] **I am not** [ ] **a U.S. Citizen**

Please tell us about yourself:

Are you a graduate of Midland 101? [ ] **yes** [✓] **no**

I have lived in Midland 20 **years.**

Occupation: English Teacher

Professional and/or Community Activities:

I currently teach at Abell Junior High as an English teacher. In the past I have worked with Fair Havens and the Food Pantry.

I attended elementary, middle, high school, and college in Midland. Currently, I work for the school district for the 5th year.

What is your personal vision for the City?

A better place to live for everyone- humans and animals. I would like to see our city grow and thrive as a more family centered community with more parks and places to spend time with each other and less of a business park that only appeals to work.

Please specify any time constraints you may have.

I am a school teacher for MISD so I follow the work calendar for the district.

Please list below the Board(s) or Commission(s) on which you are interested in serving:

(You can find a complete and current list on the City's website at *www.midlandtexas.gov*)

(1) Name of Board/Commission:

Animal Control Advisory Commission

Please tell us why you are interested in serving on this board or commission.

I am an animal lover through and through. I have adopted all of my animals and I long to make sure that laws, while followed, are in the best interest of everyone involved and there are no groups falling through the cracks.

What contribution would you most like to make?

I would like to contribute to the welfare of the animals first and foremost. Having adopted several animals throughout my life here in Midland, I know what it takes to love these animals. I want to ensure the safety of the animals and the fairness of the shelter to the community members and help avoid tragic mistakes.

Additional pertinent information or references:

N/A

(2) Name of Board/Commission:

What contribution would you most like to make?

Additional pertinent information or references:

Applications are maintained on file in the City Secretary's office for a period of one year. Should you need additional information, please call us at 432-685-7430.

Signature of Applicant

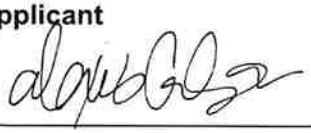

Applications may be submitted online via email or print in order to send by mail:

City of Midland

City Secretary's Office

PO Box 1152

Midland, TX 79702

Submit Via Email

Print Application

APPLICATION FOR CITY OF MIDLAND BOARDS/COMMISSIONS/COMMITTEES

As an applicant for a City board, commission, or committee, please be advised that all information on this application is subject to the Texas Open Records Act and will be available to the public.

PLEASE TYPE OR PRINT CLEARLY:

Date: 5/30/2024

Name: Erin Drake

Phone: 432.978.1470 **(Home)**

Address: 3505 Coquina LN

_____ **(Business)**

Midland TX 79707

Email: edrake8521@gmail.com

(City) (State) (Zip)

I am ☑ **I am not** ☐ **a U.S. Citizen**

Please tell us about yourself:

Are you a graduate of Midland 101? ☐ **yes** ☑ **no**

I have lived in Midland 26 **years.**

Occupation: Accountant

Professional and/or Community Activities:

I am a board member of Petroleum Accountants Society of the Permian Basin. I am a member of the Uptown Midland Business and Professional Women and Women's Energy Network groups. I am the volunteer coordinator and a foster for Fix West Texas. I also volunteer with COM Aquatics as a swim parent.

What is your personal vision for the City?

I would love to see Midland become a safe haven for lost and stray animals. I would also love Midland to continue working toward having a stray-less animal population through the spay and neuter voucher program and other avenues.

Please specify any time constraints you may have.

I do not have any time contraints.

Please list below the Board(s) or Commission(s) on which you are interested in serving:

(You can find a complete and current list on the City's website at *www.midlandtexas.gov***)**

(1) Name of Board/Commission:

Animal Control Advisory Commission

Please tell us why you are interested in serving on this board or commission.

I am interested in serving on the Animal Control Advisory Commission because I'm passionate about animals and would be honored to be part of the positive change in our city for animals and citizens with pets.

What contribution would you most like to make?

I would like to contribute ideas on ways to help the city address the stray population and the dumping epidemic we experience. I would also like to contribute to the building and maintaining of relationships with and between Midland Animal Control and local the local rescues in our area.

Additional pertinent information or references:

N/A

(2) Name of Board/Commission:

N/A

What contribution would you most like to make?

Additional pertinent information or references:

Applications are maintained on file in the City Secretary's office for a period of one year. Should you need additional information, please call us at 432-685-7430.

Signature of Applicant

Glenn Blake

Applications may be submitted online via email or print in order to send by mail:

City of Midland

City Secretary's Office

PO Box 1152

Midland, TX 79702

Submit Via Email

Print Application

APPLICATION FOR CITY OF MIDLAND BOARDS/COMMISSIONS/COMMITTEES

MIDLAND
Feel the Energy!

As an applicant for a City board, commission, or committee, please be advised that all information on this application is subject to the Texas Open Records Act and will be available to the public.

PLEASE TYPE OR PRINT CLEARLY:

Name: Brandy A. Walkup

Address: 2100 Windora Way

Midland (City) TX (State) 79707 (Zip)

Date: 7-30-2024

Phone: 432-528-3150 (Home)

_____ (Business)

Email: brandyawalkup@gmail.com

I am ☑ I am not ☐ a U.S. Citizen

Please tell us about yourself:

I have lived in Midland 24 years.

Are you a graduate of Midland 101? ☐ yes ☑ no

Occupation: retired R.N, CSN, CSPN

Professional and/or Community Activities:

MCT Board - 9yrs

MFB Board - 7yrs

worked with Midland Animal Coalition doing immunizations in the parks

What is your personal vision for the City?

Growth, modernization, safety, prosperity

Please specify any time constraints you may have.

Retired 2023

Please list below the Board(s) or Commission(s) on which you are interested in serving:

(You can find a complete and current list on the City's website at www.midlandtexas.gov)

(1) Name of Board/Commission:

Animal Control Advisory Board

Please tell us why you are interested in serving on this board or commission.

Participated in Coalition to provided low cost immunizations for citizens of Midland and support pet adoption and also participate in PET adoption.

https://mail.google.com/mail/u/0/?ik=ff74ae861e&view=pt&search=all&permthid=thread-f:1805677255702093495&s... 2/2

What contribution would you most like to make?

Improve safe housing condition for animals in Midland

Additional pertinent information or references:

Retired from MISD

(2) Name of Board/Commission:

Animal Control Advisory Board

What contribution would you most like to make?

Educate public on spade, neutering, and community needs and provide community with resources.

Additional pertinent information or references:

Applications are maintained on file in the City Secretary's office for a period of one year. Should you need additional information, please call us at 432-685-7430.

Signature of Applicant

Brandy A. Walkup

Applications may be submitted online via email or print in order to send by mail:

City of Midland
City Secretary's Office
PO Box 1152
Midland, TX 79702

Submit Via Email

Print Application

APPLICATION FOR CITY OF MIDLAND BOARDS/COMMISSIONS/COMMITTEES

As an applicant for a City board, commission, or committee, please be advised that all information on this application is subject to the Texas Open Records Act and will be available to the public.

PLEASE TYPE OR PRINT CLEARLY:

Date: 2/28/2024

Name: Kelly G. Stout

Phone: 432.770.5006 **(Home)**

Address: 2300 Boyd Ave. Midland, Tx 79705

(Business)

Email: kstout2214@aol.com

(City) (State) (Zip)

I am [✔] **I am not** [ ] **a U.S. Citizen**

Please tell us about yourself:

Are you a graduate of Midland 101? [ ] **yes** [✔] **no**

I have lived in Midland 50 **years.**

Occupation: retired

Professional and/or Community Activities:

Worked at MMH as a Respiratory Therapist, Served 5 years in the USMC. Active in my church and grandchild's school. Chaired a few booths at St. Ann's family fair for many years.

I am on the Board of Directors for Midland Community Health Care Services and Midland County fair.

What is your personal vision for the City?

I would love to see Midland be able to recruit and retain professionals. I would like to see Midland have more family orientated things to do.

Please specify any time constraints you may have.

none at this time.

2024 FEB 29 12:15 CITY SECRETARY

Please list below the Board(s) or Commission(s) on which you are interested in serving:

(You can find a complete and current list on the City's website at www.midlandtexas.gov**)**

(1) Name of Board/Commission:

Citizens Development Hotel/Motel Advisory Board

Animal Advisory Commission

Please tell us why you are interested in serving on this board or commission.

I started getting interested in the activities of Midland by attending city council meeting's about 2 years ago. I am currently enrolled in Midland 101. My thirst for more knowledge increases the more I learn.

What contribution would you most like to make?
To help Midland grow and thrive.

Additional pertinent information or references:

(2) Name of Board/Commission:

What contribution would you most like to make?

Additional pertinent information or references:

Applications are maintained on file in the City Secretary's office for a period of one year. Should you need additional information, please call us at 432-685-7430.

Signature of Applicant

Kelly Gotart

Applications may be submitted online via email or print in order to send by mail:

City of Midland

City Secretary's Office

PO Box 1152

Midland, TX 79702

Submit Via Email

Print Application

Late Submission: 09/09/2024

APPLICATION FOR CITY OF MIDLAND BOARDS/COMMISSIONS/COMMITTEES

As an applicant for a City board, commission, or committee, please be advised that all information on this application is subject to the Texas Open Records Act and will be available to the public.

PLEASE TYPE OR PRINT CLEARLY:

Date: 7/18/2024

Name: ROY GEER

Phone: 432-553-4288 **(Home)**

Address: 2606 W SHANDON AVE

432-848-4260 **(Business)**

MIDLAND TX 79705

Email: ROYGEERCPA@GMAIL.COM

(City) (State) (Zip)

I am [✓] **I am not** [ ] **a U.S. Citizen**

Please tell us about yourself:

Are you a graduate of Midland 101? [ ] **yes** [✓] **no**

I have lived in Midland 35 **years.**

Occupation: CONTROLLER/ACCOUNTANT

Professional and/or Community Activities:

MIDLAND CHAMBER OF COMMERCE BOARD AND VOLUNTEER - 10 YEARS

NONPROFIT MANAGMENT CENTER BOARD

VARIOUS ADVISORY & VOLUNTEER ROLES IN MY CHURCH, CITY YOUTH SPORTS LEAGUES, MISD SCHOOLS

What is your personal vision for the City?

I GREW UP IN THIS COMMUNITY AND HAVE ONLY LIVED HERE AND IN LUBBOCK DURING COLLEGE.

MY WIFE AND I ARE BOTH FROM HERE AND WE A HOPEFUL FOR A COMMUNITY WE CAN BE PROUD OF AND

THAT OUR CHILDREN WOULD BE GLAD TO COME BACK TO ONE DAY.

Please specify any time constraints you may have.

MY PREFERENCE IS FOR MEETINGS DURING THE BUSINESS DAY (8-5P) WHEN POSSIBLE AS I SERVE MY FAMILY

IN THE EVENINGS WITH VARIOUS COACHING AND CHURCH RESPONSIBLITIES. HOWEVER, I AM AVAILABLE FOR

EVENING MEETINGS THAT ARE PLANNED AHEAD OF TIME GIVING ME OPPORTUNITY TO ADJUST MY SCHEDULE.

Please list below the Board(s) or Commission(s) on which you are interested in serving:

(You can find a complete and current list on the City's website at www.midlandtexas.gov)

(1) Name of Board/Commission:

Citizens Development and Hotel/Motel Advisory Board: (Advisory)

Please tell us why you are interested in serving on this board or commission.

I HAVE BEEN INVOLVED IN MIDLAND FOR MORE THAN A DECADE SINCE RETURNING FROM COLLEGE AND I WANT TO

HAVE A POSITIVE INFLUENCE ON THE GROWTH BUT ALSO THE IMAGE AND STORY WE SHOW OUTSIDE OF MIDLAND.

What contribution would you most like to make?

MIDLAND HAS A HERITAGE OF BEAUTIFUL PEOPLE AND RELATIONSHIPS THAT CAN BE COUNTED ON BY OUR NEIGHBORS. I AM EXCITED FOR US TO CONTINUE THAT LEGACY AND SHOW THE REST OF THE WORLD HOW SPECIAL OF A PLACE THIS IS TO LIVE, WORK AND PLAY. I WANT TO HELP TELL THAT STORY.

Additional pertinent information or references:

I KNOW MANY OF THE CURRENT COUNCIL MEMBERS THROUGH VARIOUS COMMUNITY INVOLVEMENT EVENTS AND VENUES. I ALSO SERVE ON THE QUALITY OF PLACE CONSERVANCY WHICH STRIVES TO ENHANCE OUR QUALITY OF LIFE IN THE COMMUNITY PHYSICALLY AND TANGIBLY IN MIDLAND.

(2) Name of Board/Commission:

What contribution would you most like to make?

Additional pertinent information or references:

Applications are maintained on file in the City Secretary's office for a period of one year. Should you need additional information, please call us at 432-685-7430.

Signature of Applicant



Applications may be submitted online via email or print in order to send by mail:

City of Midland

City Secretary's Office

PO Box 1152

Midland, TX 79702

Submit Via Email

Print Application

APPLICATION FOR CITY OF MIDLAND BOARDS/COMMISSIONS/COMMITTEES

As an applicant for a City board, commission, or committee, please be advised that all information on this application is subject to the Texas Open Records Act and will be available to the public.

PLEASE TYPE OR PRINT CLEARLY:

Date: 8/28/2024

Name: Alan White

Phone: 432-638-4080 **(Home)**

Address: 4207 Kingwood Ct. 432-697-2282 **(Business)**

Midland TX 79707

Email: alan@midlandtexofmidland.com

(City) (State) (Zip)

I am ☐ **I am not** ☑ **a U.S. Citizen**

Please tell us about yourself:

Are you a graduate of Midland 101? ☐ **yes** ☑ **no**

I have lived in Midland 52 **years.**

Occupation: Owner/President of MidTex of Midland

Professional and/or Community Activities:

Served as President, Vice President & Area Representative for the Associated General Contractors West Texas Chapter

Served as a Board Member and President of Grassland Estates Homeowners Association

What is your personal vision for the City?

Well planned and organized growth for the City of Midland

Understand needs for our diverse population and help provide constructive ideas and plans to facilitate growth

Please specify any time constraints you may have.

I do not have any time constraints

Please list below the Board(s) or Commission(s) on which you are interested in serving:

(You can find a complete and current list on the City's website at *www.midlandtexas.gov***)**

(1) Name of Board/Commission:

Airport Planning and Development Board

Please tell us why you are interested in serving on this board or commission.

Make Midland the premier air travel hub of West Texas through well planned, organized & sustainable growth

What contribution would you most like to make?

Due to my background as a General Contractor, I feel that I have expertise to help with long term planning and continued growth to maintain and expand the airport facilities. Also, I am a general aviation pilot and currently utilize the facilities at Midland Air Park.

Additional pertinent information or references:

Kelly Cooke - Appraisal Review Board Member (634-8630), Walter Pate - Architect (559-0087),
Mitch Malouf - Claydesta Corporation (638-4810), Tom Knittle - The Bosworth Company (967-2135)
Regina Stephenson - COM Purchasing (685-7233)

(2) Name of Board/Commission:

What contribution would you most like to make?

Additional pertinent information or references:

Applications are maintained on file in the City Secretary's office for a period of one year. Should you need additional information, please call us at 432-685-7430.

Signature of Applicant



Applications may be submitted online via email or print in order to send by mail:

City of Midland
City Secretary's Office
PO Box 1152
Midland, TX 79702

Submit Via Email

Print Application

APPLICATION FOR CITY OF MIDLAND BOARDS/COMMISSIONS/COMMITTEES

As an applicant for a City board, commission, or committee, please be advised that all information on this application is subject to the Texas Open Records Act and will be available to the public.

PLEASE TYPE OR PRINT CLEARLY:

Date: 6/6/2024

Name: Timothy Kyle Clifton

Phone: 4323526888 **(Home)**

Address: 4501 Hackberry Ct

_____ **(Business)**

Midland TX 79707

Email: cliftonwins@yahoo.com

(City) (State) (Zip)

I am ☑ **I am not** ☐ **a U.S. Citizen**

Please tell us about yourself:

Are you a graduate of Midland 101? ☐ **yes** ☑ **no**

I have lived in Midland 26 **years.**

Occupation: VP of Sales for a Tech Company

Professional and/or Community Activities:

Most of my current local activities revolve around my son who is a student at MCS, a swimmer at COM, and active in Karate.

Me and my wife are active at Stonegate Church and also volunteer with the PBOBI fishing tournament benefitting Make a Wish.

I am a graduate of Lee High School and Texas Tech University.

What is your personal vision for the City?

To continue to grow Midland in a fiscally conservative and responsible way. To create the best city possible for generations to come.

Please specify any time constraints you may have.

I work from home and set my own schedule so I would be available as needed no matter what time of day

Please list below the Board(s) or Commission(s) on which you are interested in serving:

(You can find a complete and current list on the City's website at www.midlandtexas.gov)

(1) Name of Board/Commission:

Citizens Development and Hotel/Motel Advisory Board

Please tell us why you are interested in serving on this board or commission.

I am a 42 year old husband, father, and businessman who is very invested in this city's promotion and growth.

I was discussing wanting to get more involved with Brad Bullock and he suggested starting with a board or commission.

I am a third generation Midlander and have deep roots in this community.

What contribution would you most like to make?

To provide a fiscally conservative voice while promoting the city of Midland and it's growth.

Additional pertinent information or references:

Steve Coulon (let me know if you need contact information)

Koby West (let me know if you need contact information)

Brad Bullock (let me know if you need contact information)

(2) Name of Board/Commission:

What contribution would you most like to make?

Additional pertinent information or references:

Applications are maintained on file in the City Secretary's office for a period of one year. Should you need additional information, please call us at 432-685-7430.

Signature of Applicant

Applications may be submitted online via email or print in order to send by mail:

City of Midland

City Secretary's Office

PO Box 1152

Midland, TX 79702

Submit Via Email

Print Application

MIDLAND
Feel the Energy!

APPLICATION FOR CITY OF MIDLAND BOARDS/COMMISSIONS/COMMITTEES

As an applicant for a City board, commission, or committee, please be advised that all information on this application is subject to the Texas Open Records Act and will be available to the public.

PLEASE TYPE OR PRINT CLEARLY:

Date: 6/7/2024

Name: Shelden Kinnison

Phone: 469-732-6787 **(Home)**

Address: 2508 Country Club Drive

_____ **(Business)**

Midland Texas 79701

Email: skinnison@chemtechserv.com

(City) (State) (Zip)

I am [✔] **I am not** [ ] **a U.S. Citizen**

Please tell us about yourself:

Are you a graduate of Midland 101? [ ] **yes** [✔] **no**

I have lived in Midland 10 **years.**

Occupation: Regional Operations Manager

Professional and/or Community Activities:

Outside of working full time for ChemTech Services, Inc. for the past decade, my time is utilized by pastoring a small church in our community, First Family Fellowship. I also spend extensive time coaching T-ball (MJBA), soccer (MSA), Volleyball (Boys and Girls Club), and basketball (Upwards at FBCM). My wife and I also spent 5 years serving at SHARE for children with disabilities in Midland

What is your personal vision for the City?

My personal vision for the city is for our city to be one that serves, improves, and grows in healthy ways. We must be a community that looks like Christ in our services and progressions. I desire to be a supportive catalyst for improvements in our community. "We are in Midland, with Midland, and for Midland."

Please specify any time constraints you may have.

Due to my pastoral obligations, the weekends are typically not a good time for me to meet. Evenings after 7pm would be complex as well due to my responsibilities as a husband and father.

Please list below the Board(s) or Commission(s) on which you are interested in serving:

(You can find a complete and current list on the City's website at *www.midlandtexas.gov*)

(1) Name of Board/Commission:

Midland Development Corporation

Please tell us why you are interested in serving on this board or commission.

"Development equates to improvement." Therefore, I desire to be a part of the team that assists in continually improving our city by focusing on development and all that entails.

What contribution would you most like to make?

The contribution I would most like to make is use my collaboration and verbalization skills when it comes to developmental needs for our wonderful city. I have a mind for leadership, vision, and implementation. I am able to be a big picture partner if needed, and I am also skilled in little details if my focus is needed there.

Additional pertinent information or references:

As a 32-year-old who is married with 4 children, we are rooted in Midland, Texas. This is our home and I have the desire to be a part of the great teams that make our community wonderful, and I want to be a part of the great teams that cast vision and implementation in regards to continued improvements.

(2) Name of Board/Commission:

Midland Housing Authority Commission

What contribution would you most like to make?

I would like to be a part of the team that assists our community members that cannot assist themselves. People matter and I want to show them that Midland sees them as members that matter to us as a community at large.

Additional pertinent information or references:

Scott Dufford: 432-559-8471

Jonathan Cotton: 432-741-5390

Darn Wood: 432-248-9648

Applications are maintained on file in the City Secretary's office for a period of one year. Should you need additional information, please call us at 432-685-7430.

Signature of Applicant



Applications may be submitted online via email or print in order to send by mail:

City of Midland

City Secretary's Office

PO Box 1152

Midland, TX 79702

Submit Via Email

Print Application

APPLICATION FOR CITY OF MIDLAND BOARDS/COMMISSIONS/COMMITTEES

As an applicant for a City board, commission, or committee, please be advised that all information on this application is subject to the Texas Open Records Act and will be available to the public.

PLEASE TYPE OR PRINT CLEARLY:

Date: Aug. 9, 2024

Name: Gina Adams Martin

Phone: 432-238-0597 **(Home)**

Address: 2604 Bluebird Lane

432-271-4624 **(Business)**

Midland TX 79705

Email: gamttgab5@gmail.com

(City) (State) (Zip)

I am [✓] **I am not** [ ] **a U.S. Citizen**

Please tell us about yourself:

Are you a graduate of Midland 101? [ ] **yes** [✓] **no**

I have lived in Midland 45 **years.**

Occupation: Licensed Professional Counselor

Professional and/or Community Activities:

I'm an entrepreneur - I have my own private practice (Licensed Professional Counselor. My husband & I as well as all 3 of our children have grown up in Midland, graduated from LHS & MHS. I am an active member in musical groups in/around Midland - Midland College's non-profit community concert band as well as a local cover band which plays at many local venues.

What is your personal vision for the City?

For Midland to be a healthy community for people of all walks of life to live & preferably thrive; for citizens to have access to affordable housing as well as mental health services

Please specify any time constraints you may have.

No constraints. I have the ability to schedule my days as I need to.

Please list below the Board(s) or Commission(s) on which you are interested in serving:

(You can find a complete and current list on the City's website at www.midlandtexas.gov)

(1) Name of Board/Commission:

Permian Basin Community Center for MH/MR

Please tell us why you are interested in serving on this board or commission.

I am a mental health counselor (Licensed Professional Counselor) in private practice. I have spent many years providing services to low-income citizens while I counseled at area non-profits ....

(Midland Rape Crisis/Children's Advocacy Center & Safe Place - domestic violence shelter)

What contribution would you most like to make?

Honestly, I don't know. I just feel like this is an area I have expertise & interest in, & if my expertise as an LPC is needed here, I'd like to make myself available.

I'd like to help facilitate the accessibility of mental health services to all citizens of Midland.

Additional pertinent information or references:

(2) Name of Board/Commission:

Midland Housing Authority Commission

What contribution would you most like to make?

I have seen the struggle that many low-income individuals have had with acquiring housing in Midland & my heart goes out to them. I'd like to better understand the system & hopeful be a liaison between these individuals & & their access to the housing options in Midland

Additional pertinent information or references:

This online form will not allow me to insert a signature (below). The "submit via email" button does not function properly either.

Applications are maintained on file in the City Secretary's office for a period of one year. Should you need additional information, please call us at 432-685-7430.

Signature of Applicant

Applications may be submitted online via email or print in order to send by mail:

City of Midland
City Secretary's Office
PO Box 1152
Midland, TX 79702

Submit Via Email

Print Application

APPLICATION FOR CITY OF MIDLAND BOARDS/COMMISSIONS/COMMITTEES

As an applicant for a City board, commission, or committee, please be advised that all information on this application is subject to the Texas Open Records Act and will be available to the public.

PLEASE TYPE OR PRINT CLEARLY:

Date: 7/29/2024

Name: Dalia Salinas-Tejeda

Phone: 4326612156 **(Home)**

Address: 4504 Monty Drive

_____ **(Business)**

Midland TX 79703

Email: dalsal521@yahoo.com

(City) (State) (Zip)

I am [✔] **I am not** [ ] **a U.S. Citizen**

Please tell us about yourself:

Are you a graduate of Midland 101? [ ] **yes** [✔] **no**

I have lived in Midland 14 **years.**

Occupation: Asst. to the City Manager of Odessa

Professional and/or Community Activities:

I work in local governemt and I often volunteer for many local community events in both Midland and Odessa.

What is your personal vision for the City?

Making the city grow, and highlights it's best points for other communities to see.

Please specify any time constraints you may have.

I work Monday-Friday from 8 to 5 in odessa, but with adequate notice I can arrange to attend meetings

Please list below the Board(s) or Commission(s) on which you are interested in serving:

(You can find a complete and current list on the City's website at www.midlandtexas.gov)

(1) Name of Board/Commission:

Midland-Odessa Urban Transit District Board

Please tell us why you are interested in serving on this board or commission.

As a resident in Midland with a career in Odessa the transit system is important to me. Transit services could be the key to Bridging bridging the gap between Midland-Odessa.

What contribution would you most like to make?

I would bring the interest of both cities. Living in Midland and working in Odessa allows me to see both prospectives.

Additional pertinent information or references:

I believe my employment in local government would be an asset to the board position.

(2) Name of Board/Commission:

What contribution would you most like to make?

Additional pertinent information or references:

Applications are maintained on file in the City Secretary's office for a period of one year. Should you need additional information, please call us at 432-685-7430.

Signature of Applicant

Dalia Solinas-Tejeda

Applications may be submitted online via email or print in order to send by mail:

City of Midland

City Secretary's Office

PO Box 1152

Midland, TX 79702

Submit Via Email

Print Application

APPLICATION FOR CITY OF MIDLAND BOARDS/COMMISSIONS/COMMITTEES

As an applicant for a City board, commission, or committee, please be advised that all information on this application is subject to the Texas Open Records Act and will be available to the public.

PLEASE TYPE OR PRINT CLEARLY:

Date: 8/6/2024

Name: Bryan A. Ball

Phone: (432) 210-2819 **(Home)**

Address: 2310 Culpeper Dr.

(432) 813-5573 **(Business)**

Midland, TX 79705

Email: bryanball@mail.com

(City) (State) (Zip)

I am [✓] **I am not** [ ] **a U.S. Citizen**

Please tell us about yourself:

Are you a graduate of Midland 101? [ ] **yes** [✓] **no**

I have lived in Midland 16 **years.**

Occupation: Petroleum Senior Operations Engineer

Professional and/or Community Activities:

Midland West Rotary - Sergeant at Arms, Indian Princesses - Tally Keeper, Midland A&M Club, Minuet Club, Society of Petroleum Engineers, Long time Live on Stage season ticket holder, and Petroleum Museum member

What is your personal vision for the City?

I see Midland as a place people want to come and make a home. I feel many of the projects going on currently are helping to foster that goal. This includes the new schools, new roads/highways, sports facilities, mental health center, first responder training facility, downtown improvements, zoo, etc. I want to do my part to add to the livability of the city for the entire cross-section of citizens here.

Please specify any time constraints you may have.

I work 7-5 M-Thurs, and 7-11 Friday. I generally have lunch availability from 11:30-1:30 though. My wife does bowling leagues Tues night, and the kids do piano lessons Thurs night.

Please list below the Board(s) or Commission(s) on which you are interested in serving:

(You can find a complete and current list on the City's website at www.midlandtexas.gov)

(1) Name of Board/Commission:

Midland-Odessa Urban Transit District Board

Please tell us why you are interested in serving on this board or commission.

I am interested in this particular board because I have seen it as a growing resource in the area. I see it as invaluable to many people in my own neighborhood. I also see the effect it can have on reducing traffic and congestion on our roads if it could expand

even further. I would like to do what I can to help it be run efficiently to provide the best services it can to the most people.

What contribution would you most like to make?

I am not completely familiar with what all of the oversight responsibilities of the board are for this agency. Regardless, I feel I have a background that can be utilized to provide valuable insight to steer the direction of the transit system. I'm interested in furthering the idea of expanded services, as well as maintaining efficiency and affordability.

Additional pertinent information or references:

I was raised in DFW, but moved here right after graduating college. I got attached after that, and haven't looked back. I have a family with a wife two small kids born in Midland, TX. At this point in my career I am a little more free to give back to the community, and have a desire to contribute where I think I could be helpful. I see this as an opportunity to just give back and help the community.

(2) Name of Board/Commission:

What contribution would you most like to make?

Additional pertinent information or references:

Applications are maintained on file in the City Secretary's office for a period of one year. Should you need additional information, please call us at 432-685-7430.

Signature of Applicant

Bryan A Ball Digitally signed by Bryan A Ball
Date: 2024.08.07 10:38:30 -05'00'

Applications may be submitted online via email or print in order to send by mail:

City of Midland

City Secretary's Office

PO Box 1152

Midland, TX 79702

Submit Via Email

Print Application

APPLICATION FOR CITY OF MIDLAND BOARDS/COMMISSIONS/COMMITTEES

As an applicant for a City board, commission, or committee, please be advised that all information on this application is subject to the Texas Open Records Act and will be available to the public.

PLEASE TYPE OR PRINT CLEARLY:

Date: 8/7/2024

Name: Daniel Garcia

Phone: 432.230.4966 **(Home)**

Address: 4403 W Dengar Avenue

None **(Business)**

Midland Texas 79707

Email: danumpurs@gmail.com

(City) (State) (Zip)

I am [✓] **I am not** [ ] **a U.S. Citizen**

Please tell us about yourself:

Are you a graduate of Midland 101? [✓] **yes** [ ] **no**

I have lived in Midland 39 **years.**

Occupation: Retired

Professional and/or Community Activities:

Texas Association of School Business Officials

What is your personal vision for the City?

To make Midland Texas the best city in Texas. To use our biggest asset to our advantage and make understand that Midland is leader not only in our region, but the entire state. We want those conventions coming to our city.

Please specify any time constraints you may have.

Currently I do not any time restraints. Certainly this could change if employment status changes.

Please list below the Board(s) or Commission(s) on which you are interested in serving:

(You can find a complete and current list on the City's website at www.midlandtexas.gov)

(1) Name of Board/Commission:

Citizens Development and Hotel/Motel Advisory Board

Please tell us why you are interested in serving on this board or commission.

To have a say in the future of this city. I have applied a few times before to various boards but have not had the opportunity to serve

What contribution would you most like to make?

To apply what I have learned from my past experiences and make a positive contribution towards the future of Midland.

Additional pertinent information or references:

(2) Name of Board/Commission:

Midland-Odessa Urban Transit District Board

What contribution would you most like to make?

To apply what I have learned from my past experiences and make a positive contribution towards the future of Midland.

Additional pertinent information or references:

Lupe Villlanueva - 432.934.1465, lupev@me.com, 4802 Lemonwood Court Midland Tx 79707

Rebecca Mull - 432.661.0298, mullrebecca7@gmail.com, 700 N Catherine Street Terrell Tx 75160

Haydee Pena- 915.244.4555, haydeepena_1@hotmail.com, 4900 Woodrow Bean Drive El Paso Tx 79924

Applications are maintained on file in the City Secretary's office for a period of one year. Should you need additional information, please call us at 432-685-7430.

Signature of Applicant

Daniel Garcia Digitally signed by Daniel Garcia
Date: 2024.08.08 09:12:57 -05'00'

Applications may be submitted online via email or print in order to send by mail:

City of Midland

City Secretary's Office

PO Box 1152

Midland, TX 79702

Submit Via Email

Print Application

APPLICATION FOR CITY OF MIDLAND BOARDS/COMMISSIONS/COMMITTEES

As an applicant for a City board, commission, or committee, please be advised that all information on this application is subject to the Texas Open Records Act and will be available to the public.

PLEASE TYPE OR PRINT CLEARLY:

Date: 7/26/2024

Name: Justin Dolan

Phone: 214-682-6542 **(Home)**

Address: 810 Harvard Ave.

432-688-1374 **(Business)**

Midland TX 79701

Email: jdolan@lcalawfirm.com

(City) (State) (Zip)

I am [✓] **I am not** [ ] **a U.S. Citizen**

Please tell us about yourself:

Are you a graduate of Midland 101? [ ] **yes** [✓] **no**

I have lived in Midland 9 **years.**

Occupation: Attorney

Professional and/or Community Activities:

Community Children's Clinic Board Member; PBLA; Midland County Bar Association

What is your personal vision for the City?

I want it to grow and be a great place to raise my family. The infrastructure needs upgrading and we need to do better in order to attract employees and companies to stay in Midland.

Please specify any time constraints you may have.

I am flexible but also have two young children so during the work week is best time for me to meet.

Please list below the Board(s) or Commission(s) on which you are interested in serving:

(You can find a complete and current list on the City's website at www.midlandtexas.gov)

(1) Name of Board/Commission:

Planning & Zoning

Please tell us why you are interested in serving on this board or commission.

The P&Z commission appeals to me as having a direct impact on what is built or allowed to be built in the city.

What contribution would you most like to make?

I would like to be invovled on the decision making process in Midland and to better the community as a whole. I believe becoming actively involved with a board or commission is the best place to do just that.

Additional pertinent information or references:

(2) Name of Board/Commission:

Oil and Gas Advisory Commission

What contribution would you most like to make?

The Oil and Gas Advisory commission interests me because my main job focus is in the oil and gas field. I feel like my work as an oil and gas attorney makes me qualified to help guide the direction of the city's oil and gas operations.

Additional pertinent information or references:

Applications are maintained on file in the City Secretary's office for a period of one year. Should you need additional information, please call us at 432-685-7430.

Signature of Applicant



Applications may be submitted online via email or print in order to send by mail:

City of Midland

City Secretary's Office

PO Box 1152

Midland, TX 79702

Submit Via Email

Print Application

APPLICATION FOR CITY OF MIDLAND BOARDS/COMMISSIONS/COMMITTEES

As an applicant for a City board, commission, or committee, please be advised that all information on this application is subject to the Texas Open Records Act and will be available to the public.

PLEASE TYPE OR PRINT CLEARLY:

Date: 7/26/2024

Name: Damon Button

Phone: _____ **(Home)**

Address: 2204 Bradford Ct

432-634-4623 **(Business)**

Midland TX 79705

Email: dcbclb1950@gmail.com

(City) (State) (Zip)

I am [✓] **I am not** [ ] **a U.S. Citizen**

Please tell us about yourself:

Are you a graduate of Midland 101? [ ] **yes** [✓] **no**

I have lived in Midland 35 **years.**

Occupation: Retired

Professional and/or Community Activities:

Retired CFO of Endeavor Energy Resources, LP

Former CFO of Clayton Williams gas processing and pipeline companies

Former Manger of KPMG, an international CPA firm

What is your personal vision for the City?

Continued growth and improved quality of life should be emphasized. Growth should be balanced through consideration of private residential and commerical real estate interests concerns always seeking a net win for the community.

Please specify any time constraints you may have.

My only residence is Midland. I travel occasionally for pleasure but, in general, will be available as required.

Please list below the Board(s) or Commission(s) on which you are interested in serving:

(You can find a complete and current list on the City's website at *www.midlandtexas.gov***)**

(1) Name of Board/Commission:

Oil & Gas Advisory commission

Please tell us why you are interested in serving on this board or commission.

I think I can add value through serving on Boards dealing with areas which I have substantial experience and expertise.

My goal in life after my retirement is to add value in every way.

What contribution would you most like to make?

My contribution would be hearing about issues from all points of view in a thoughtful, patient manner. I can contribute skills learned in a business career to mediate and develop an approach to problem solving. Through prior finance and oil and gas marketing jobs, I believe that I can provide an unique macro economic perspective.

Additional pertinent information or references:

Autry C. Stephens, Sole Member of Endeavor Peroleum Inc., general partner of Endeavor Energy Resources, LP

Don Evans, former Secretary of Commerce

(2) Name of Board/Commission:

What contribution would you most like to make?

Additional pertinent information or references:

Applications are maintained on file in the City Secretary's office for a period of one year. Should you need additional information, please call us at 432-685-7430.

Signature of Applicant



Applications may be submitted online via email or print in order to send by mail:

City of Midland

City Secretary's Office

PO Box 1152

Midland, TX 79702

Print Application

APPLICATION FOR CITY OF MIDLAND BOARDS/COMMISSIONS/COMMITTEES

As an applicant for a City board, commission, or committee, please be advised that all information on this application is subject to the Texas Open Records Act and will be available to the public.

PLEASE TYPE OR PRINT CLEARLY:

Date: 1/29/2024

Name: Kelli Davis

Phone: 806-928-5833 **(Home)**

Address: 4102 Stratton Dr.

432-253-0500 **(Business)**

Midland Texas 79707

Email: kelli@secondstory.co

(City) (State) (Zip)

I am [✓] **I am not** [ ] **a U.S. Citizen**

Please tell us about yourself:

Are you a graduate of Midland 101? [✓] **yes** [ ] **no**

I have lived in Midland 28 **years.**

Occupation: Managing Partner at Second Story Coworking

Professional and/or Community Activities:

Founding member of Founder's Blend entrepreneurial group; member of Midland Chamber of Commerce; active member of Stonegate Fellowship; serve with youth group at Stonegate Fellowship.

What is your personal vision for the City?

I would love to see Midland continue to grow into a city I am proud to raise my family in. This means finding GOOD solutions to schooling challenges, and seeing improvements in infrastructure and amenities. We're well on our way with current leadership, but strategic development & growth in key areas, like downtown, are crucial.

Please specify any time constraints you may have.

I own three businesses with my husband and have three kids so my time is as limited as anyone else's might be, but I have flexible hours and can make most anything work with advanced notice.

Please list below the Board(s) or Commission(s) on which you are interested in serving:

(You can find a complete and current list on the City's website at *www.midlandtexas.gov*)

(1) Name of Board/Commission:

Midland Downtown Park Conservancy Board

Please tell us why you are interested in serving on this board or commission.

We have owned a business in downtown Midland for almost 5 years now, and the growth has been amazing. I want to be in the loop on everything downtown-related, and also be a steward for the area. Proper protection & stewardship for our resources is essential.

What contribution would you most like to make?

The perspective of a downtown business owner is invaluable. Additionally,we have over 100 local businesses in and out of our space on a regular basis between our offices, coworking, meeting rooms and mailboxes, so I have my finger on the pulse of our business community. I would like to add this perspective and wisdom to the Downtown Park Conservancy Board.

Additional pertinent information or references:

References: Wes Perry, downtown business and building owner, wes@pbex.com

Laura Roman, downtown business partner and personal reference, laura.roman@weaver.com

(2) Name of Board/Commission:

What contribution would you most like to make?

Additional pertinent information or references:

Applications are maintained on file in the City Secretary's office for a period of one year. Should you need additional information, please call us at 432-685-7430.

Signature of Applicant

Kelli Davis

Digitally signed by Kelli Davis
DN: cn=Kelli Davis, c=US, o=Second Story Coworking, email=kelli@secondstory.co
Reason: I attest to the accuracy and integrity of this document
Date: 2024.01.29 12:26:18 -06'00'

Applications may be submitted online via email or print in order to send by mail:

City of Midland

City Secretary's Office

PO Box 1152

Midland, TX 79702

Submit Via Email

Print Application

DocuSign Envelope ID: BF6B0B4F-D1F3-4518-8AC7-12F1F955A24D

APPLICATION FOR CITY OF MIDLAND BOARDS/COMMISSIONS/COMMITTEES

As an applicant for a City board, commission, or committee, please be advised that all information on this application is subject to the Texas Open Records Act and will be available to the public.

PLEASE TYPE OR PRINT CLEARLY:

Date: 2/28/2024

Name: Shonna Garcia

Phone: 432-559-6110 **(Home)**

Address: 1 LaFayette PL

(Business)

Midland TX 79705

Email: shonna@scgrealestate.net

(City) (State) (Zip)

I am [✓] **I am not** [ ] **a U.S. Citizen**

Please tell us about yourself:

Are you a graduate of Midland 101? [ ] **yes** [✓] **no**

I have lived in Midland 47 **years.**

Occupation: Real Estate

Professional and/or Community Activities:

I have been in the real estate industry since 1997. Currently one of three partners for Maven Real Estate Group I serve on the MHRA and the Archway Outreach Board. I created The Fabulous Women of Midland in 2016; that has now expanded to 5 other Texas counties.It started mostly as an avenure for women to meet other women but with the growth a non profit is selected each mo. to supl

What is your personal vision for the City?

I have loved watching our city grow and expand, Growing up here it is and always will be "Home" i would like the energy to stay strong on growth and creating a place that current Midlanders want to stay in and also creatimg a place new Midlander are excited to call home.In my business I often see the dreaded faces as people arrive, but then enjoy helping them buy their next property becat

Please specify any time constraints you may have.

As long as I know dates a head of time I can usually be present for meetings etc.

Please list below the Board(s) or Commission(s) on which you are interested in serving:

(You can find a complete and current list on the City's website at www.midlandtexas.gov)

(1) Name of Board/Commission:

Hotel/Motel Board

Please tell us why you are interested in serving on this board or commission.

I think this board aligns well with my profession and passion for helping non profits.

What contribution would you most like to make?

Knoweldge of Midland, non-propfits, my connections with Midland as whole and women networks

Additional pertinent information or references:

(2) Name of Board/Commission:

What contribution would you most like to make?

Additional pertinent information or references:

Applications are maintained on file in the City Secretary's office for a period of one year. Should you need additional information, please call us at 432-685-7430.

Signature of Applicant

DocuSigned by:

D67F629CA62243F...

Applications may be submitted online via email or print in order to send by mail:

City of Midland

City Secretary's Office

PO Box 1152

Midland, TX 79702

Submit Via Email

Print Application

APPLICATION FOR CITY OF MIDLAND BOARDS/COMMISSIONS/COMMITTEES

As an applicant for a City board, commission, or committee, please be advised that all information on this application is subject to the Texas Open Records Act and will be available to the public.

PLEASE TYPE OR PRINT CLEARLY:

Date: 1/29/2024

Name: Jonny Heins

Phone: 713-829-3581 **(Home)**

713-829-3581 **(Business)**

Address: 3400 Choate Pl

Midland TX 79707

(City) (State) (Zip)

Email: jonnyheins@gmail.com

I am [✓] **I am not** [ ] **a U.S. Citizen**

Please tell us about yourself:

Are you a graduate of Midland 101? [ ] **yes** [✓] **no**

I have lived in Midland 6 **years.**

Occupation: Senior Director of Corporate Affairs/Attorney

Professional and/or Community Activities:

I currently serve as the Senior Director of Corporate Affairs at Permian Resources where I oversee government affairs, community affairs, real estate, and charitable giving. Since moving to Midland in 2017, I have been active in the community, serving as the Board President of Spectrum of Solutions, a local nonprofit. I also assisted with the initial development of Centennial Park.

What is your personal vision for the City?

Midland has made great leaps forward since I moved here in 2017. It has been exciting to play a small part in the growth of the City, including working on Concho's real estate development projects and assisting with the Spectrum's headquarters construction. My vision for the City is for the younger generation of Midlanders to continue take an active role in the future development of the City.

Please specify any time constraints you may have.

None. I served as an initial board member for the Midland Downtown Park Conservancy at formation in 2018. I am currently the Secretary of the Conservancy and have attended nearly every board meeting of the Conservancy since inception.

Please list below the Board(s) or Commission(s) on which you are interested in serving:

(You can find a complete and current list on the City's website at *www.midlandtexas.gov*)

(1) Name of Board/Commission:

Midland Downtown Park Conservancy Board.

Please tell us why you are interested in serving on this board or commission.

Having worked on the formation of the Conservancy, the construction of Centennial Park, and numerous issues that have faced the Conservancy over the past five years, I have a unique understanding of the history and aspirations of the Conservancy. I am

an attorney and can also provide legal guidance to the Board, which I have also done in the past.

What contribution would you most like to make?

I would like to assist Centennial Park in its continued role as a catalyst for downtown development. With future projects in the vicinity, including the Santa Rita Hotel, I think there are great opportunities for partnership, which I have the background to assist with. There will also be legal challenges associated with such projects that I can help solve creatively.

Additional pertinent information or references:

I currently serve on (1) the Board of Trustees of Trinity School of Midland, (2) the Board of the Permian Basin Petroleum Association, (3) the Board of the Downtown Midland Management District, (4) the Management Committee of the Permian Strategic Partnership, and (5) the Management Committee of AXPC. References: Chris Boehler (713-320-8313). Scott Kidwell (432-553-0668).

(2) Name of Board/Commission:

What contribution would you most like to make?

Additional pertinent information or references:

Applications are maintained on file in the City Secretary's office for a period of one year. Should you need additional information, please call us at 432-685-7430.

Signature of Applicant

Jonny Heins Digitally signed by Jonny Heins
Date: 2024.01.29 17:10:20 -06'00'

Applications may be submitted online via email or print in order to send by mail:

City of Midland
City Secretary's Office
PO Box 1152
Midland, TX 79702

Submit Via Email

Print Application

APPLICATION FOR CITY OF MIDLAND BOARDS/COMMISSIONS/COMMITTEES

As an applicant for a City board, commission, or committee, please be advised that all information on this application is subject to the Texas Open Records Act and will be available to the public.

PLEASE TYPE OR PRINT CLEARLY:

Date: 7/22/24

Name: Chip Hight

Phone: (832) 496-2640 (Home)

Address: 206 Club Drive

(Business)

Midland TX 79701

Email: chip@opalstable.com

(City) (State) (Zip)

I am [✔] I am not [ ] a U.S. Citizen

Please tell us about yourself:

I have lived in Midland 10 years.

Are you a graduate of Midland 101? [ ] yes [✔] no

Occupation: Business Owner/Entrepreneur

Professional and/or Community Activities:
I own Opal's Table in downtown Midland and The Hemingway.

What is your personal vision for the City?
I would like to see Midland continue to grow.

Please specify any time constraints you may have.
n/a

Please list below the Board(s) or Commission(s) on which you are interested in serving:

(You can find a complete and current list on the City's website at www.midlandtexas.gov)

(1) Name of Board/Commission:
Midland Downtown Park Conservancy

Please tell us why you are interested in serving on this board or commission.

What contribution would you most like to make?
As a downtown/park adjacent business owner, I bring first hand knowledge of the downtown landscape

Additional pertinent information or references:

(2) Name of Board/Commission:

What contribution would you most like to make?

Additional pertinent information or references:

Applications are maintained on file in the City Secretary's office for a period of one year. Should you need additional information, please call us at 432-685-7430.

Signature of Applicant

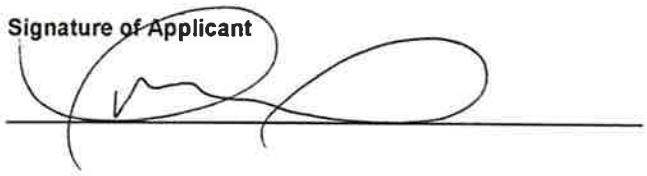

Applications may be submitted online via email or print in order to send by mail:

City of Midland

City Secretary's Office

PO Box 1152

Midland, TX 79702

Submit Via Email

Print Application

APPLICATION FOR CITY OF MIDLAND BOARDS/COMMISSIONS/COMMITTEES

As an applicant for a City board, commission, or committee, please be advised that all information on this application is subject to the Texas Open Records Act and will be available to the public.

PLEASE TYPE OR PRINT CLEARLY:

Date: 2/15/2024

Name: JOHN L KENNEDY

Phone: 432-288-4118 (Home)

Address: 1202 DOUGLAS AVE

_____ (Business)

Email: JLKMIDLAND@GMAIL.COM

MIDLAND TEXAS 79701

(City) (State) (Zip)

I am [X] I am not [ ] a U.S. Citizen

Please tell us about yourself:

Are you a graduate of Midland 101? [ ] yes [X] no

I have lived in Midland 38 years.

Occupation: FINANCIAL PROFESSIONAL

Professional and/or Community Activities:

TRUSTEE FOR PETROLEUM MUSEUM
FIRST PRESBYTERIAN OF MIDLAND
GRADUATE OF LEADERSHIP MIDLAND

What is your personal vision for the City?

TO BECOME A CITY THAT PEOPLE WANT TO RELOCATE TO
INCREASE OUR QUALITY OF PLACE

Please specify any time constraints you may have.

NONE

Please list below the Board(s) or Commission(s) on which you are interested in serving:

(You can find a complete and current list on the City's website at www.midlandtexas.gov)

(1) Name of Board/Commission:

DOWNTOWN CONSERVANCY

Please tell us why you are interested in serving on this board or commission.

HELP MAKE DOWNTOWN A PLACE TO GO TO

What contribution would you most like to make?

My Time & Effort

Additional pertinent information or references:

(2) Name of Board/Commission:

What contribution would you most like to make?

Additional pertinent information or references:

Applications are maintained on file in the City Secretary's office for a period of one year. Should you need additional information, please call us at 432-685-7430.

Signature of Applicant

Applications may be submitted online via email or print in order to send by mail or fax:

City of Midland
City Secretary's Office
PO Box 1152
Midland, TX 79702
FAX: (432) 685-7433

Submit Via Email

Print Application

APPLICATION FOR CITY OF MIDLAND BOARDS/COMMISSIONS/COMMITTEES

As an applicant for a City board, commission, or committee, please be advised that all information on this application is subject to the Texas Open Records Act and will be available to the public.

PLEASE TYPE OR PRINT CLEARLY:

Date: 2-1-24

Name: Roger Primera

Phone: 432-813-9191 (Home)

Address: 723 W. Dengar

(Business)

Midland TX 79705

Email: usmctx25@gmail.com

(City) (State) (Zip)

I am ☑ I am not ☐ a U.S. Citizen

Please tell us about yourself:

Are you a graduate of Midland 101? ☐ yes ☑ no

I have lived in Midland 29 years.

Occupation: Human Resources Manager

Professional and/or Community Activities:

Volunteer w/ Horses, Hearts & Hands (H3)
Big Brother/Big Sister
YMCA, KMB

What is your personal vision for the City?

This is such an amazing city and a superb place to live. I've raised my 3 children here and I want to see the city flourish further into greatness. I want to get the community more involved.

Please specify any time constraints you may have.

none

Please list below the Board(s) or Commission(s) on which you are interested in serving:

(You can find a complete and current list on the City's website at www.midlandtexas.gov)

(1) Name of Board/Commission:

Midland Downtown Park Conservancy

Please tell us why you are interested in serving on this board or commission.

I truly love the downtown area now, especially the park. I want to contribute to all of its glory! Attract more people

What contribution would you most like to make?

I already talk about the park (CP) to everyone I see. I would like to speak even more from the heart about its progress, events and improvements.

Additional pertinent information or references:

I know many people in our community and am aware of the "wants" that they seek from the park.

(2) Name of Board/Commission:

Barbara & George H.W. Bush Convention Center Advisory Board

What contribution would you most like to make?

The Midland Center was always a special place for me. The memories will live on. I want to give the Bush Center my attention to not only put it out in the community more, but to also contribute to its future.

Additional pertinent information or references:

Rosco Thomas - longtime friend

Applications are maintained on file in the City Secretary's office for a period of one year. Should you need additional information, please call us at 432-685-7430.

Signature of Applicant

R. Rie

Applications may be submitted online via email or print in order to send by mail:

City of Midland
City Secretary's Office
PO Box 1152
Midland, TX 79702

Submit Via Email

Print Application

APPLICATION FOR CITY OF MIDLAND BOARDS/COMMISSIONS/COMMITTEES

As an applicant for a City board, commission, or committee, please be advised that all information on this application is subject to the Texas Open Records Act and will be available to the public.

PLEASE TYPE OR PRINT CLEARLY:

Date: Jan 30, 2024

Name: Traci Proctor

Phone: 432-349-1783 **(Home)**

Address: 1607 W. Louisiana Ave

432-682-3753 **(Business)**

Midland, TX 79707

Email: tproctor@btaoil.com

(City) (State) (Zip)

I am [✓] **I am not** [ ] **a U.S. Citizen**

Please tell us about yourself:

Are you a graduate of Midland 101? [ ] **yes** [✓] **no**

I have lived in Midland 16 **years.**

Occupation: Director of Human Resources BTA Oil Producers. Formerly CEO Non-Profit ORGS for 20+ years

Professional and/or Community Activities:

My husband and I are not from Midland, but consider it our home. We have recently moved back after being in FL for past 10 years. While in Florida I was the CEO of a large non-profit and served both state of Florida and Georgia and worked in collaboration with DOJ, state and local groups. Chaired and started large fundraising events, etc. While in TX, I was ASSOC. EX Director with Brad Swendig, and together we built the COM Physical Therapy and Wellness divisions and the Florence Marie Hall Natatorium. Please see resume for complete list. Thank you.

What is your personal vision for the City?

To proactively recognize need for change, make intentional improvements, & respectfully grow with evolving demands - while preserving the integrity & legacy of our community and history.

Please specify any time constraints you may have.

Please list below the Board(s) or Commission(s) on which you are interested in serving:

(You can find a complete and current list on the City's website at *www.midlandtexas.gov*)

(1) Name of Board/Commission:
Midland Downtown Park Conservancy

Please tell us why you are interested in serving on this board or commission.

I wish to pull from my experience of developing & growing missions to enhance the quality of life for Midlanders, while increasing both social and economic impact. I would like to be part of your continued success to evolve and enrich residents, visitors, and overall downtown park activities that essentially promote better lifestyles, community respect, and urban vitality for OUR CITY, OUR HOME.

What contribution would you most like to make?

Together with (and at the discretion of) the Board and Executive Director, I would like to evaluate the program services, revenue generation, fund development strategies, and future planning in order to ensure a long term viable and ever evolving organization.

Additional pertinent information or references:

BJ Beal, BTA Oil Producers

Happy to provide as many relevant Midland references as requested.

Happy to provide as many relevant Florida references as requested.

(2) Name of Board/Commission:

What contribution would you most like to make?

Additional pertinent information or references:

Applications are maintained on file in the City Secretary's office for a period of one year. Should you need additional information, please call us at 432-685-7430.

Signature of Applicant



Applications may be submitted online via email or print in order to send by mail:

City of Midland

City Secretary's Office

PO Box 1152

Midland, TX 79702

Submit Via Email

Print Application

TRACI S. PROCTOR

PRESIDENT & CEO

Midland, Texas
432-349-1783
comproctor@yahoo.com

EXECUTIVE LEADERSHIP

- *Non-Profit Startup, Turnaround, Expansions*
- *Board Governance and Strategic Direction*
- *Multi-Million Dollar Budgets and Endowment Management*
- *Profitability, Cost Benefit Analysis & Cost Control*
- *Financial Data/Metrics & Outcome measures*
- *Advancing Organizational Missions & Visions*
- *Leadership (400+ staff) & Inclusive Excellence*
- *Integrated Cross-functional Planning & Implementation*
- *Statistical & Analytical Forecasting*
- *Fundraising, Donor Relations and Large Events*
- *Advocacy, PR and Marketing, Public Speaking*
- *Team Building & Performance Motivation*

PROFESSIONAL EXPERIENCE

CEO / PRESIDENT

Ronald McDonald House Charities, Inc. - Tallahassee, FL ***October 2017 to Present***

- **Strategic Planning:** *Analyzed organizational structures & overall efficiency measures to revamp objectives, accountability, administrative excellence, financial performance, fundraising, board engagement, and employee outcomes*
- **Operational Effectiveness:** *Implemented and administered framework of policies, objectives and accountability systems. Administered needs assessments, created data systems to quantify outcome reports in order to analyze services & programs, satisfaction rates, future needs and organizational performance levels.*
- **Economic Growth:** *Defined short & long-term financial goals, investment plans, return on investments, cost to raise a dollar, financial analysis & metrics. Cut expenses by 38%, increased NET revenue by 350%, restructured fundraising & programming strategies & identified new financial growth, resulting in increased profits & sustainability.*
- **Leadership:** *Empowered employees to take ownership; identify their contribution to overall organizational successes. Strengthened staff and board energy & commitment to professionally invest in project outcomes. Assessed state of the Board of Directors: then strengthened the structure, commitment, and purpose for serving. Improved partnership to increase level of satisfaction and organizational identity via effective communication, transparency & clear expectations.*

EXECUTIVE CONSULTANT

Non-Profit and For Profit Companies - Local, State & National ***May 2016 to Present***

- **Overall Scope:** *Advise Executives & BODs how to implement more effective systems; improve financial planning and management; operational processes; board relations; bylaws; state & federal regulations & filings, development, etc.*

EXECUTIVE DIRECTOR / CEO *- Hired by National Headquarters to recover operations.*

Sunrise Group, Inc.- 501c(3)- Georgia Division - (Florida Headquarters) ***March 2015 to May 2016***

- **Strategic Planning:** *Conducted extensive industry research to formulate internal & external reorganization & regulatory changes. Set priorities, roles, & systematically align resources. Created important partnerships with Georgia Dept. of Behavioral Health and Developmental Disabilities - state and regional levels, Department of Justice, and CMS.*
- **Operational Effectiveness:** *Revamped division resulting in financial recovery& streamlined processes. Analyzed inefficiencies, formed new strategies and implemented systems, control mechanisms & aligned financial resources with growth objectives.*
- **Economic Growth:** *Within first four months, identified and recovered $4 million lost revenue while securing financial structures for additional $3.2 million for a non-profit company.*
- **Leadership:** *Led 150 healthcare employees. Motivated, trained & empowered managers to become confident leaders & decision makers. Established local, state, & national level industry partnerships.*

ASSOCIATE EXECUTIVE DIRECTOR

COM AQUATICS, INC., 501c(3) - Midland, Texas *June 2005 to March 2015*

- **Strategic Planning:** *Converted 501C3 into a self-sufficient, nonprofit corporation capable of generating enough program revenue to cover all operational expenses. Built & operated a wellness & post-surgical physical rehabilitation facility (land & water divisions) - complete with fund relations, building contract negotiations, staffing, operational processes & systems. Secured all medicare, insurance, & workers compensation contracts, fiscal intermediary and regulatory practices. Generated enough income in 3 years to expand with another 40,000 s.f. facility addition: THE EMH NATATORIUM for all ages, sports, wellness and RECREATION.*
- **Operational Effectiveness:** *Conducted financial management analysis. Developed, planned and recovered 97% aging accounts. Modernized invoicing & receivables & restructured operations resulting in program growth, increased revenue, profits, cash flow, expansion, and employee collaboration. Created HR division, overall communication, incentives, trainings, pay structures & retention while maintaining inclusive environment.*
- **Leadership:** *Lead a team of 300 staff, 30 programs, 3200 members, 500 wellness participants, 1200 children, 6500 patients visits. Developed partnerships with foundations, sponsors, corporate leaders, Local, State, & National Government, Children's Rehabilitation Center, hospitals, Special Olympics, University of Texas-PB,, US Navy, medical facilities, physicians, & surgeons*
- **Fundraising:** *Lead multiple capital campaigns (more than $20 million total raised): fundraised, managed, and operated four multi-million dollar facility expansions, including a wellness and therapy division, 40,000 sq. ft. natatorium and courtyard and recognition pavilion. Cultivated relationships with foundations, corporations, community leaders. Grant writing, capital campaigns, presentations, fund source research and outreach, annual giving programs.*
- **Economic Growth & Development:** *Doubled participation & operating budget: Expanded program options & revenue sources. Motivated & lead employees to reenergize objectives, understand membership perceptions, & identify roles resulting in higher employee retention rates, workplace cohesion, increased profits.*
- **Marketing and Public Relations:** *Identified & strengthened organization's target market, product & services. Created a market brand, materials & consistency. Increased awareness & mission profile. Assessed & implemented new pricing and payment structures/procedures. Tracked organizational statistics for measurable results, accountability, and assessment. Developed relationships with key leaders, customer test groups, employee teams, community groups to identify perceptions, monitor results, and achieve desired goals.*

EDUCATION & PROFESSIONAL TRAINING

THE UNIVERSITY OF ARIZONA ***Tucson, AZ***

Bachelor of Arts, Graduated with Distinction

PROFESSIONAL TRAINING

- *Investment Management & Policy - Carroll & Co, CPAs*
- *Executive Management - Excellence Program, Atlanta*
- *Organizational Effectiveness/Leadership - SCI Workshops*
- *Human Resource Compliance - U.S. Department of Labor*
- *Fundraising Insights - Benevon, SCI Workshops*
- *Non-Profit Tax Law - Carr Riggs Ingram*
- *Conflict Resolution - Univ. of Texas & TIMET*
- *CMS rules/modifications/fiscal compliance - BMS*
- *Insurance - Business MNGT Solutions*
- *Risk Management - SCI Workshops*

COMMITTEE INVOLVEMENT

- *Neighborhood Champions Board, BANK OF AMERICA*
- *Board of Directors - Ronald McDonald House, SCI*
- *Compliance Comm.- Ronald McDonald House, COM & SCI*
- *Audit and Finance - Ronald McDonald House, COM, SCI*
- *Future Development Committee - Georgia and SCI*
- *Planning Committee - UA, RMHC, COM*
- *Executive Committee - State of Georgia*
- *Fundraising Committee - RMHC, COM INC. & SCI*
- *Building Committee - COM, INC.*
- *Scholarship Committee - COM, INC., Odessa College*
- *Marketing Committee - RMHC, UA, COM*
- *Events and Fundraising - COM, SCI, RMHC*

APPLICATION FOR CITY OF MIDLAND BOARDS/COMMISSIONS/COMMITTEES

As an applicant for a City board, commission, or committee, please be advised that all information on this application is subject to the Texas Open Records Act and will be available to the public.

PLEASE TYPE OR PRINT CLEARLY:

Date: 1/22/2024

Name: Audrey Stevens

Phone: 432-279-0868 **(Home)**

Address: 100 N Main St Apt 410 **(Business)**

Midland TX 79701

Email: draudreystevens@gmail.com

(City) (State) (Zip)

I am ☑ **I am not** ☐ **a U.S. Citizen**

Please tell us about yourself:

Are you a graduate of Midland 101? ☐ **yes** ☑ **no**

I have lived in Midland 19 **years.**

Occupation: Clinical Psychologist; Assistant Professor-TTUHSC

Professional and/or Community Activities:

Currently minimal community activities as I recently moved back to Midland after 14 years living all over the country. Professionally, a part of my job is expanding access to mental healthcare locally and rurally in the greater West Texas region.

What is your personal vision for the City?

I want to see Midland reach its full potential and offer every service and activity that larger metropolitan areas have.

Please specify any time constraints you may have.

With advanced notice, I could likely make any date and time work.

Please list below the Board(s) or Commission(s) on which you are interested in serving:

(You can find a complete and current list on the City's website at *www.midlandtexas.gov*)

(1) Name of Board/Commission:

Midland Downtown Park Conservancy Board

Please tell us why you are interested in serving on this board or commission.

I am eager to join the board because I am passionate about public parks, as well as downtown Midland. I love living downtown and am thrilled to see how far the Midland downtown area has come in recent years.

What contribution would you most like to make?

I am excited about the proposition of the Hotel Santa Rita and am committed to making downtown Midland the center of business, entertainment, and visitors to the Permian Basin area. I would love to see Centennial Park continue to expand public events offered. Also, as a clinical psychologist, I know the importance of public outdoor spaces for fostering community and positive mental health.

Additional pertinent information or references:

My parents, Randy and Julie Stevens, have been active community volunteers since they moved to Midland in 1981.

(2) Name of Board/Commission:

Parks and Recreation Commission

What contribution would you most like to make?

Similarly, I would like to expand usage of public parks in Midland. There are so many great parks that offer community gatherings that may be underutilized.

Additional pertinent information or references:

A core part of my childhood revolves around my enjoyable experiences at Fasken Park, and I would love the positive experiences and memories to continue for many generations.

Applications are maintained on file in the City Secretary's office for a period of one year. Should you need additional information, please call us at 432-685-7430.

Signature of Applicant

Audrey Stevens Digitally signed by Audrey Stevens Date: 2024.01.23 10:54:54 -06'00'

Applications may be submitted online via email or print in order to send by mail:

City of Midland
City Secretary's Office
PO Box 1152
Midland, TX 79702

Submit Via Email

Print Application

AIRPORT PLANNING & DEVELOPMENT BOARD
(Advisory; Membership - 10: Terms - 3 Years Expiring 3-3-4)
Ex-Officio Members are the City Manager and the City Attorney. The Secretary is the Director of Aviation.
September 2023 - August 2024

MEMBER	TERM EXPIRES	ATTENDANCE	MEETINGS ATTENDED	TOTAL MTGS	ELIGIBLE	NOTES
Dave Joyner	Sept 30 2024	75%	6	8		Still interested in serving
Justin Kuethe	Sept 30 2025	63%	5	8		
Nick McClure	Sept 30 2025	75%	6	8		
James Linderman	Sept 30 2025	63%	5	8		
Frank Kisner	Sept 30 2025	100%	8	8		
Brandon Patterson	Sept 30 2025	63%	5	8		
Gena Linebarger	Sept 30 2026	75%	6	8		
Benjamin Fietz	Sept 30 2026	75%	6	8		
John Echols	Sept 30 2026	75%	6	8		
Samuel Jolliffe V	Sept 30 2026	75%	6	8		
Applicants Name	Additional Boards Applying to	COUNCIL NOTES				
K. Bryan Reeves						
Brandon Ofield						
Wesley Arrambide						
Rob Roy McDonald						
David Tryson						
Michael Dietrich	CDHMAB & O&G					
Gary Gray						

Steve Price
Tom Segulja
Sherri Allen BCC
Matthew Wilson P&R

ANIMAL SERVICES ADVISORY COMMISSION

(Decision Making; Membership - 6: Terms - 4 Years Expiring 4 odd and 2 even)

September 2021- August 2022

MEMBER	TERM EXPIRES	ATTENDANCE	MEETINGS ATTENDED	TOTAL MTGS	ELIGIBLE	NOTES
Melissa Hobson (Daily Operations)	Sept 30 2025	100%	4	4		
VACANT (Jensen) (Vet)	Sept 30 2024	75%	3	4		
VACANT (Sport)	Sept 30 2024	75%	3	4		
VACANT (Hotchkiss)	Sept 30 2024	75%	3	4		
Dianne Anderson (County)	Sept 30 2027	100%	4	4		
Alyson Dial	Sept 30 2026	100%	4	4		
Beth Meeks	Sept 30 2026	50%	2	4		

APPLICANTS NAME	Additional Boards Applying to	NOTES
Devyn Daley		
Amanda Herd		
Camille Bryant		
Betsey Brininstool		
Marion Bryant	P&R & PBCC	
Sam Harrill		
Alexis Hope Gibson		
Shelly Haney		
Erin Drake		
Kelly Stout		
Brandy Walkup		
Daniel Norwood	P&R & PBCC	
MyRon McGee	P&R & MSDC	

ANIMAL SERVICES ADVISORY COMMISSION

(Decision Making; Membership - 6: Terms - 4 Years Expiring 4 odd and 2 even)

September 2023- August 2024

MEMBER	TERM EXPIRES	ATTENDANCE	MEETINGS ATTENDED	TOTAL MTGS	ELIGIBLE	NOTES
Melissa Hobson (Daily Operations)	Sept 30 2025	100%	4	4		
VACANT (Jensen) (Vet)	Sept 30 2024	75%	3	4		
VACANT (Sport)	Sept 30 2024	75%	3	4		
VACANT (Hotchkiss)	Sept 30 2024	75%	3	4		
Dianne Anderson (County)	Sept 30 2027	100%	4	4		
Alyson Dial	Sept 30 2026	100%	4	4		
Beth Meeks	Sept 30 2026	50%	2	4		

APPLICANTS NAME	Additional Boards Applying to	NOTES
Devyn Daley		
Amanda Herd		
Camille Bryant		
Betsey Brininstool		
Marion Bryant	P&R & PBCC	
Sam Harrill		
Alexis Hope Gibson		
Shelly Haney		
Erin Drake		
Kelly Stout		
Brandy Walkup		
Daniel Norwood	P&R & PBCC	
MyRon McGee	P&R & MSDC	

BUILDING CODES REVIEW COMMITTEE/CONSTRUCTION BOARD OF ADJUSTMENTS & APPEALS

(Membership - 9; Terms - 6 Years)

September 2023 - August 2024

MEMBER	TERM EXPIRES	ATTENDANCE	MEETINGS ATTENDED	TOTAL MEETINGS	ELIGIBLE FOR ANOTHER TERM	NOTES
Ryan Almand (Electrical Contractor)	Sept 30 2024		0	0	Yes	
Jay Bradford (Architect)	Sept 30 2024		0	0	Yes	
T. J McClure (Architect)	Sept 30 2024		0	0	Yes	
Laurence Oeth (Structural Engineer)	Sept 30 2024		0	0	Yes	
Gary Glasscock (General Contractor)	Sept 30 2024		0	0	Yes	
Robert Anderson (Homebuilder)	Sept 30 2024		0	0	Yes	
Dean Kelly (Plumbing & Mechanical Contractor)	Sept 30 2028		0	0		
Kenneth Whiting (Fire Protection)	Sept 30 2028		0	0		
Jeff Pinkstaff (Liaison)	Sept 30 2024		0	0	Yes	

APPLICANTS NAME	Additional Boards Applying to	NOTES

CAPITAL IMPROVEMENT ADVISORY COMMITTEE

(Advisory)

n of 40% must be representative of real estate, developemtn, or building industries who are not employees or officials of as political subdivision or governmer

September 2023 - August 2024

MEMBER	TERM EXPIRES	ATTENDANCE	MEETINGS ATTENDED	TOTAL MTGS	ELIGIBLE	NOTES
Carl Craigo		100%	2	2		
Walter Pate		100%	2	2		
Mark Payne		100%	2	2		
Brian Sales		100%	0	2		
VACANT (Koehler)		100%	2	2		
Bill Scott		0%	0	2		
Gabe McClelland		100%	2	2		

Applicants Name	Additional Boards Applying to	COUNCIL NOTES
Joshua Ferguson		

MIDLAND HOUSING AUTHORITY COMMISSION
(Advisory; Membership - 5: Terms - 2 Years Expiring 2-3)
September 2023 - August 2024

MEMBER	TERM EXPIRES	ATTENDANCE	MEETINGS ATTENDED	TOTAL MTGS	ELIGIBLE	NOTES
Wes Gotcher	Oct 30 2024	100%	5	5		Still Interested in Serving
Latoya Mayberry	Oct 30 2025	60%	3	5		
Cheryl Wadley	Oct 30 2025	100%	5	5		
Michelle Evans	Oct 30 2025	80%	4	5		
Neville Peyton	Oct 30 2025	100%	5	5		
Applicants Name	Additional Boards Applying to	COUNCIL NOTES				
Sheldon Kinnison	MDC					
Gina Martin	PBCC					

PARKS AND RECREATION COMMISSION
(Advisory; Membership - 9: Terms - 3 Years Expiring 3-3-3)
September 2023 - August 2024

MEMBER	TERM EXPIRES	ATTENDANCE	MEETINGS ATTENDED	TOTAL MTGS	ELIGIBLE	NOTES
VACANT (Howard)	Sept 30 2024	40%	2	5		
VACANT (Smith)	Sept 30 2025	60%	3	5		
Amber Voithorer	Sept 30 2025	100%	5	5		
Rachel Overman	Sept 30 2025	100%	5	5		
Sarah Judge	Sept 30 2025	60%	3	5		
Lynn Rodgers	Sept 30 2025	60%	3	5		
Susannah Prucka	Sept 30 2026	80%	4	5		
Dal Watson	Sept 30 2026	100%	5	5		
Andra Jones	Sept 30 2026	60%	3	5		

Applicants Name	Additional Boards Applying to	COUNCIL NOTES
Dustin Johnson		
Marion Bryant	PBCC	
Vincent Doczy	O&G	
Brittany Halbert		
Joy Paulson	P&Z	
Danile Norwood	ASAC	
Max Kilgore		
Weston Turner		
Matthew Wilson	APDB	
MyRon McGee	ACAC & MSDC	

BARBARA AND GEORGE H.W. BUSH CONVENTION CENTER ADVISOR BOARD
(Membership - 7: City Appoints 4 Seats; Terms - 3 Years - Staggered)
September 2023 - August 2024

MEMBER	TERM EXPIRES	ATTENDANCE	MEETINGS ATTENDED	TOTAL MTGS	ELIGIBLE	NOTES
VACANT (Nelson)	Sept 30 2024	75%	3	4		
Randall Milloy	Sept 30 2025	100%	4	4		
Tucker Schneemann	Sept 30 2025	75%	3	4		
Dillon Custer	Sept 30 2026	100%	4	4		

Applicants Name	Additional Boards Applying to	COUNCIL NOTES
Brandon Ofield	APDB	
Tim Jakel Jr.	CDHMAB	
Sherri Allen	APDB	

CITIZENS DEVELOPMENT AND HOTEL/MOTEL ADVISORY BOARD
(Membership - 7: Terms - 2 Years - Staggered)
September 2023 - August 2024

MEMBER	TERM EXPIRES	ATTENDANCE	MEETINGS ATTENDED	TOTAL MTGS	ELIGIBLE	NOTES
Brandon Ofield	Sept 30 2024	100%	3	3		
Ankur Bhakta	Sept 30 2024	100%	3	3		
VACANT (Harrison)	Sept 30 2024	100%	3	3		
Clint Williamson	Sept 30 2025	100%	3	3		
Heather Bredimus	Sept 30 2025	100%	3	3		
Shonna Garcia	Sept 30 2025	100%	3	3		
Charles Harrington	Sept 30 2025	100%	1	1		Appointed April 2024
Applicants Name	Additional Boards Applying to	COUNCIL NOTES				
Timothy Clifton						
Michael Dietrich	APDB & O&G					
Joy Maraio						
Kelly Stout	ACAC					
Tim Jakel Jr.	BCC					
Daniel Garcia	MOUTDB					

MIDLAND-ODESSA URBAN TRANSIT DISTRICT BOARD

(Advisory; Membership - 12 with 6 appointed by Midland: Terms - 2 Years Staggered; Can serve 3 terms)

September 2023 - August 2024

MEMBER	TERM EXPIRES	ATTENDANCE	MEETINGS ATTENDED	TOTAL MTGS	ELIGIBLE	NOTES
Joseph Sanchez	Sept 30 2027	80%	8	10		
Daniel Norwood	Sept 30 2029	80%	8	10		
Brian Stubbs	Sept 30 2024	90%	9	10	Yes	
Don "Woody" Woodward	Sept 30 2024	80%	8	10	Yes	
VACANT (Corrales)	Sept 30 2024	0%	0	9		
Robert Crites	Sept 30 2024	89%	8	9	Yes	

Applicants Name	Additional Boards Applying to	COUNCIL NOTES
Dalia Salinas-Tejeda		
Bryan Ball		
Daniel Garcia	CDHMAB	
Lindsey Adams		

MIDLAND SPACEPORT DEVELOPMENT CORPORATION
(Decision Making; Membership - 7; 4 Appointed by City & 3 by County; Terms - 2 Years)
September 2023 - August 2024

MEMBER	TERM EXPIRES	ATTENDANCE	MEETINGS ATTENDED	TOTAL MTGS	ELIGIBLE	NOTES
Frank Kisner (City)	Sept 30 2025	100%	4	4		
Stephen Lowery (County)	Sept 30 2025	100%	1	1		Appointed April 2024
Frank Tarzian (County)	Sept 30 2025	100%	1	1		Appointed April 2024
Ed Anderson (County)	Sept 30 2025	100%	4	4		
John Trischitti III (City)	Sept 30 2025	100%	2	2		Appointed January 2024
Claudius S Czyzewske (City)	Sept 30 2025	100%	2	2		Appointed January 2024
VACANT (Tryson) (City)	Sept 30 2025	50%	1	2		Appointed January 2024
Applicants Name	Additional Boards Applying to	COUNCIL NOTES				
MyRon McGee	ACAC & P&R					

OIL AND GAS ADVISORY BOEARD
(Membership - : Terms - 3 Years - Expiring 2-2-1)
September 2023 - August 2024

MEMBER	TERM EXPIRES	ATTENDANCE	MEETINGS ATTENDED	TOTAL MTGS	ELIGIBLE	NOTES
Rhett Bullock	Sept 30 2024	50%	3	6		Resigned
Cameron Willmann	Sept 30 2024	83%	5	6		Interesting in continuing to serve
Scott Bowden	Sept 30 2025	67%	4	6		
Ross Klabon	Sept 30 2025	100%	6	6		
Layton Hargesheimer	Sept 30 2026	50%	3	6		

Applicants Name	Additional Boards Applying to	COUNCIL NOTES
Justin Dolan	O&G	
Vincent Doczy	P&R	
Michael Dietrich	CDHMAB & MOUTDB	
Damon Button		

ZONING BOARD OF ADJUSTMENT AND AIRPORT ZONING BOARD OF ADJUSTMENT
(Advisory; Membership - 5: Terms - 2 Years Expiring 3 Odd & 2 Even)
September 2023 - August 2024

MEMBER	TERM EXPIRES	ATTENDANCE	MEETINGS ATTENDED	TOTAL MTGS	ELIGIBLE	NOTES
VACANT (Claybrook)	Sept 30 2024		0	0		
VACANT (Gerety)	Sept 30 2024		0	0		
Rachel Walker	Sept 30 2025		0	0		
Elizabeth Moore	Sept 30 2025		0	0		
Robert Gray	Sept 30 2027		0	0		
ALTERNATES: (not applicable to Airport Zoning)						
VACANT (Schumann)	Sept 30 2025		0	0		
VACANCY						
VACANCY						
VACANCY						

Applicants Name	Additional Boards Applying to	NOTES
Brandon LaFoy	P&Z	