CITY OF MIDLAND, TEXAS
AGENDA FOR CITY COUNCIL MEETING
July 11, 2023 - 10:00 AM
300 North Loraine
Midland, Texas
Council Chamber - City Hall

A quorum of the City Council intends to be physically present at the aforementioned location.

The City Council may discuss, consider, and take action on any item listed on this agenda.

OPENING ITEMS

1. Invocation – Pastor Daniel Stephens, Mid-Cities Church

2. Pledge of Allegiance

PRESENTATIONS

3. Presentation of special events, organizations, individuals, or periods of time including, but not limited to:

    3a. Recognition of City Employees who recently graduated from the Certified Public Manager Program.

CONSENT AGENDA

4. MOTION APPROVING THE FOLLOWING MINUTES:

    4a. WORK SESSION OF JUNE 27, 2023

    4b. REGULAR SESSION OF JUNE 27, 2023

    4c. SPECIAL SESSION OF JUNE 27, 2023

5. 2023-086 – RESOLUTION AWARDING A CONTRACT FOR THE T23-03 TRAFFIC SIGNAL PROJECT TO THE SOLE BIDDER, WILLIS ELECTRIC CO., LP OF ABILENE, TEXAS, AT A TOTAL COST OF $1,961,083.80; APPROVING $196,108.38 FOR CONTINGENCIES; TRANSFERRING AND APPROPRIATING FUNDS; AND AUTHORIZING PAYMENT (DISTRICT: ALL) (GENERAL SERVICES)

6. 079-2023 – MOTION APPROVING PLANS AND SPECIFICATIONS FOR THE NORTH CITIZEN COLLECTION STATION PROJECT AND THE WEST CITIZEN COLLECTION

STATION PROJECT, SAID PLANS AND SPECIFICATIONS BEING ON FILE IN THE CITY SECRETARY'S OFFICE REFERENCED BY THE NUMBER AND DATE OF THIS MOTION, AND AUTHORIZING THE INTERIM CITY MANAGER OR THE INTERIM CITY MANAGER'S DESIGNEE TO ADVERTISE A REQUEST FOR COMPETITIVE SEALED PROPOSALS FOR SAID PROJECTS PURSUANT TO THE STATUTES OF THE STATE OF TEXAS FOR ACCOMPLISHING THE WORK SET FORTH IN SAID PLANS AND SPECIFICATIONS AND TO NEGOTIATE AN AGREEMENT FOR SAID WORK; PROVIDED, HOWEVER, THAT SAID AGREEMENT SHALL NOT BECOME EFFECTIVE UNTIL APPROVED BY THE CITY COUNCIL (DISTRICT: ALL) (GENERAL SERVICES)

7. 2023-087 – RESOLUTION APPROVING THE SELECTION OF BEYOND ENGINEERING AND TESTING, LLC, ENPROTEC/HIBBS & TODD, INC. DOING BUSINESS AS GEOTEC LABS, AND TERRACON CONSULTANTS, INC. TO ASSIST THE ENGINEERING SERVICES DEPARTMENT WITH CONSTRUCTION MATERIALS TESTING BY PROVIDING PROFESSIONAL ENGINEERING SERVICES AND OTHER SERVICES IN CONNECTION THEREWITH ON AN AS-NEEDED BASIS; AUTHORIZING THE NEGOTIATION AND EXECUTION OF A PROFESSIONAL SERVICES AGREEMENT WITH EACH FIRM; PROVIDING THAT EACH AGREEMENT SHALL BE FOR A TERM NOT TO EXCEED THREE YEARS; AUTHORIZING THE NEGOTIATION AND EXECUTION OF TASK ORDERS IN ACCORDANCE WITH SUCH AGREEMENTS; PROVIDING THAT THE PAYMENT FOR EACH TASK ORDER EXECUTED IN ACCORDANCE WITH SUCH AN AGREEMENT SHALL NOT EXCEED $150,000.00; PROVIDING THAT THE TOTAL COST TO THE CITY FOR ALL TASK ORDERS EXECUTED EACH YEAR IN ACCORDANCE WITH EACH AGREEMENT SHALL NOT EXCEED $300,000.00 PER AGREEMENT PER YEAR; AND AUTHORIZING PAYMENT (DISTRICT: ALL) (GENERAL SERVICES)

8. 2023-088 – RESOLUTION AMENDING THE CITY OF MIDLAND PERSONNEL POLICIES; CONVERTING THE CITY'S VACATION AND SICK LEAVE PROGRAMS INTO A PAID TIME OFF PROGRAM; AMENDING OTHER LEAVE POLICIES; AND PROVIDING AN EFFECTIVE DATE OF JULY 12, 2023 (DISTRICT: ALL) (ADMINISTRATIVE SERVICES)

9. 080-2023 – MOTION APPROVING THE PLANS AND SPECIFICATIONS FOR THE MAF NORTHWEST BASIN WILDLIFE IMPROVEMENTS PROJECT, SAID PLANS AND SPECIFICATIONS BEING ON FILE IN THE CITY SECRETARY'S OFFICE REFERENCED BY THE NUMBER AND DATE OF THIS MOTION, AND AUTHORIZING THE INTERIM CITY MANAGER OR THE INTERIM CITY MANAGER'S DESIGNEE TO ADVERTISE FOR COMPETITIVE BIDS FOR SAID PROJECT PURSUANT TO THE STATUTES OF THE STATE OF TEXAS FOR ACCOMPLISHING THE WORK SET FORTH IN SAID PLANS AND SPECIFICATIONS (DISTRICT 4) (AIRPORTS)

10. 081-2023 – MOTION APPROVING THE PLANS AND SPECIFICATIONS FOR THE MAF TAXIWAY "E" RECONSTRUCTION PROJECT, SAID PLANS AND SPECIFICATIONS BEING ON FILE IN THE CITY SECRETARY'S OFFICE REFERENCED BY THE NUMBER AND DATE OF THIS MOTION, AND AUTHORIZING THE INTERIM CITY MANAGER OR THE INTERIM CITY MANAGER'S DESIGNEE TO ADVERTISE FOR COMPETITIVE BIDS FOR SAID PROJECT PURSUANT TO THE STATUTES OF THE STATE OF TEXAS FOR

ACCOMPLISHING THE WORK SET FORTH IN SAID PLANS AND SPECIFICATIONS (DISTRICT 4) (AIRPORTS)

11. 082-2023 – MOTION APPROVING A REQUEST BY NEWTON ENGINEERING, TO DEFER PAVING IMPROVEMENTS FOR MIDKIFF INDUSTRIAL CENTER, SECTION 28, AND TO WAIVE THE CORRESPONDING FINANCIAL SECURITY GUARANTEE VALUED AT $84,496.00, AN AMOUNT EQUAL TO THE ESTIMATED COST TO CONSTRUCT THE PUBLIC INFRASTRUCTURE. THE SUBJECT PROPERTY IS GENERALLY LOCATED EAST OF SOUTH MIDKIFF ROAD AND SOUTH OF WEST INDUSTRIAL AVENUE. THE PROPERTY IS WITHIN THE CORPORATE LIMITS OF THE CITY OF MIDLAND (DISTRICT 2) (ENGINEERING SERVICES)

12. 083-2023 – MOTION AUTHORIZING THE EXECUTION OF A RIGHT-OF-WAY LICENSE (23-329-008) WITH ENTERPRISE NAVITAS MIDSTREAM MIDLAND BASIN, LLC REGARDING CITY-OWNED PROPERTY DESCRIBED AS SECTION 30, BLOCK 36, TOWNSHIP 3 SOUTH, T&P RR CO. SURVEY, MIDLAND COUNTY, TEXAS (DISTRICT: NONE) (UTILITIES)

13. 084-2023 – MOTION AUTHORIZING THE EXECUTION OF A RIGHT-OF-WAY LICENSE (23-329-031) BETWEEN THE CITY OF MIDLAND AND TARGA PIPELINE MID-CONTINENT WEST-TEX LLC REGARDING CITY-OWNED PROPERTY DESCRIBED AS SECTIONS 29, 31, 32 AND 41, BLOCK 38, TOWNSHIP 1 SOUTH, T&P RR CO. SURVEY, MIDLAND COUNTY, TEXAS (DISTRICT 2) (UTILITIES)

SECOND READINGS

14. 10417 – AN ORDINANCE VACATING AND ABANDONING A 0.069-ACRE PORTION OF ALLEY RIGHT-OF-WAY LOCATED ADJACENT TO LOTS 1 THROUGH 3 AND LOTS 6 THROUGH 8, BLOCK 75, WEST END ADDITION, CITY AND COUNTY OF MIDLAND, TEXAS (GENERALLY LOCATED ON THE EAST SIDE OF ANDREWS HIGHWAY, APPROXIMATELY 200 FEET SOUTH OF WEST TEXAS AVENUE); ADOPTING THE APPRAISAL BY THE CITY MANAGER OF $12,024.00; RETAINING A NONEXCLUSIVE UTILITY EASEMENT; AND ORDERING RECORDATION BY THE CITY SECRETARY (DISTRICT 3) (DEVELOPMENT SERVICES) (FIRST READING HELD JUNE 27, 2023)

15. 10418 – AN ORDINANCE AMENDING THE ZONING DISTRICT MAP OF THE CITY OF MIDLAND TO REZONE LOT 2E, BLOCK 33, NORTHGATE ADDITION, SECTION 21, CORRECTION PLAT, CITY AND COUNTY OF MIDLAND, TEXAS, FROM PD, PLANNED DEVELOPMENT DISTRICT FOR A SHOPPING CENTER TO AN AMENDED PD, PLANNED DEVELOPMENT DISTRICT FOR A SHOPPING CENTER (GENERALLY LOCATED AT THE NORTHEAST CORNER OF NORTHCREST DRIVE AND WEST LOOP 250 NORTH); CONTAINING A CUMULATIVE CLAUSE; CONTAINING A SAVINGS AND SEVERABILITY CLAUSE; PROVIDING FOR A MAXIMUM PENALTY OR FINE OF TWO THOUSAND DOLLARS ($2,000.00); AND ORDERING PUBLICATION (DISTRICT 1) (DEVELOPMENT SERVICES) (FIRST READING HELD JUNE 27, 2023)

16. 10419 – AN ORDINANCE VACATING AND ABANDONING A 0.03-ACRE PORTION OF

MADISON STREET RIGHT-OF-WAY AND A 0.03-ACRE PORTION OF CARVER STREET RIGHT-OF-WAY, BOTH LOCATED ADJACENT TO BLOCK 9, EAST MIDLAND ADDITION, CITY AND COUNTY OF MIDLAND, TEXAS (GENERALLY LOCATED AT THE SOUTHEAST CORNER OF THE INTERSECTION OF GARDEN LANE AND MADISON STREET AND AT THE SOUTHWEST CORNER OF THE INTERSECTION OF GARDEN LANE AND CARVER STREET); ADOPTING THE APPRAISAL BY THE CITY MANAGER OF $5,227.20; RETAINING A NONEXCLUSIVE UTILITY EASEMENT; AND ORDERING RECORDATION BY THE CITY SECRETARY (DISTRICT 2) (DEVELOPMENT SERVICES) (FIRST READING HELD JUNE 27, 2023)

PUBLIC HEARINGS

The City Council will hold public hearings on the following items:

17. 10420 – AN ORDINANCE OF THE CITY OF MIDLAND, TEXAS, DESIGNATING LOTS 22, 23 AND 24, BLOCK 65, ORIGINAL TOWN ADDITION, CITY AND COUNTY OF MIDLAND, TEXAS (GENERALLY LOCATED ON THE WEST SIDE OF SOUTH LORAINE STREET, APPROXIMATELY 130 FEET NORTH OF WEST MISSOURI AVENUE) AS TAX ABATEMENT REINVESTMENT ZONE NUMBER 2023-02 FOR COMMERCIAL AND INDUSTRIAL TAX ABATEMENT AS AUTHORIZED BY CHAPTER 312 OF THE TEXAS TAX CODE; ESTABLISHING THE BOUNDARIES THEREOF AND OTHER MATTERS RELATING THERETO; DECLARING FINDINGS OF FACT; AND PROVIDING A SAVINGS AND SEVERABILITY CLAUSE (DISTRICT 2) (CITY MANAGER)

18. 10421 – AN ORDINANCE EXTENDING THE BOUNDARIES OF THE CITY OF MIDLAND, TEXAS, BY ADDING THERETO A CERTAIN AREA ADJOINING THE PRESENT CITY LIMITS, BEING A 17.345-ACRE TRACT OF LAND OUT OF SECTION 35, BLOCK 40, T-1-S, T&P RR CO. SURVEY, MIDLAND COUNTY, TEXAS (GENERALLY LOCATED ON THE NORTH SIDE OF HIGHWAY 191, APPROXIMATELY 700 FEET WEST OF HIGHWAY 158); ORDERING PUBLICATION; AND ORDERING RECORDATION BY THE CITY SECRETARY (EXTRATERRITORIAL JURISDICTION) (DEVELOPMENT SERVICES)

19. 10422 – AN ORDINANCE ESTABLISHING THE INITIAL ZONING CLASSIFICATION OF THE AREA INDICATED AS BEING A 17.345-ACRE TRACT OF LAND OUT OF SECTION 35, BLOCK 40, T-1-S, T&P RR CO. SURVEY, MIDLAND COUNTY, TEXAS, AS AN RR, REGIONAL RETAIL DISTRICT; SAID TRACT BEING GENERALLY LOCATED ON THE NORTH SIDE OF STATE HIGHWAY 191, APPROXIMATELY 700 FEET WEST OF STATE HIGHWAY 158; CONTAINING A CUMULATIVE CLAUSE; CONTAINING A SAVINGS AND SEVERABILITY CLAUSE; PROVIDING FOR A MAXIMUM PENALTY OR FINE OF TWO THOUSAND DOLLARS ($2,000.00); AND ORDERING PUBLICATION (DISTRICT: NONE) (DEVELOPMENT SERVICES)

20. 10423 – AN ORDINANCE AMENDING THE ZONING DISTRICT MAP OF THE CITY OF MIDLAND TO GRANT A SPECIFIC USE DESIGNATION WITH TERM FOR A 3,400-SQUARE FOOT PORTION OF LOT 12, BLOCK 38, ORIGINAL TOWN, CITY AND COUNTY OF MIDLAND, TEXAS (GENERALLY LOCATED ON THE EAST SIDE OF NORTH MAIN STREET, APPROXIMATELY 25 FEET SOUTH OF EAST ILLINOIS AVENUE), WHICH IS PRESENTLY ZONED CB, CENTRAL BUSINESS DISTRICT,

ALLOWING SAID PROPERTY TO BE USED FOR THE SALE OF ALL ALCOHOLIC BEVERAGES IN A BAR FOR ON-PREMISES CONSUMPTION; MAKING SAID DESIGNATION SUBJECT TO CERTAIN CONDITIONS AND RESTRICTIONS CONTAINED HEREIN; CONTAINING A CUMULATIVE CLAUSE; CONTAINING A SAVINGS AND SEVERABILITY CLAUSE; PROVIDING FOR A MAXIMUM PENALTY OR FINE OF TWO THOUSAND DOLLARS ($2,000.00); AND ORDERING PUBLICATION (DISTRICT 2) (DEVELOPMENT SERVICES)

21. 10424 – AN ORDINANCE AMENDING THE ZONING DISTRICT MAP OF THE CITY OF MIDLAND TO GRANT A SPECIFIC USE DESIGNATION WITH TERM FOR A 1,595-SQUARE FOOT PORTION OF LOT 24, BLOCK 53, ORIGINAL TOWN, CITY AND COUNTY OF MIDLAND, TEXAS (GENERALLY LOCATED AT THE SOUTHEAST CORNER OF THE INTERSECTION OF NORTH MAIN STREET AND EAST TEXAS AVENUE), WHICH IS PRESENTLY ZONED CB, CENTRAL BUSINESS DISTRICT, ALLOWING SAID PROPERTY TO BE USED FOR THE SALE OF ALL ALCOHOLIC BEVERAGES IN A BAR FOR ON-PREMISES CONSUMPTION; MAKING SAID DESIGNATION SUBJECT TO CERTAIN CONDITIONS AND RESTRICTIONS CONTAINED HEREIN; CONTAINING A CUMULATIVE CLAUSE; CONTAINING A SAVINGS AND SEVERABILITY CLAUSE; PROVIDING FOR A MAXIMUM PENALTY OR FINE OF TWO THOUSAND DOLLARS ($2,000.00); AND ORDERING PUBLICATION (DISTRICT 2) (DEVELOPMENT SERVICES)

22. 10425 – AN ORDINANCE AMENDING THE ZONING DISTRICT MAP OF THE CITY OF MIDLAND TO GRANT A SPECIFIC USE DESIGNATION WITH TERM FOR LOTS 1 AND 2, BLOCK 182, SOUTHERN ADDITION, CITY AND COUNTY OF MIDLAND, TEXAS (GENERALLY LOCATED AT THE SOUTHWEST CORNER OF THE INTERSECTION OF SOUTH BIG SPRING STREET AND WEST FLORIDA AVENUE), WHICH IS PRESENTLY ZONED RR, REGIONAL RETAIL DISTRICT, ALLOWING SAID PROPERTY TO BE USED FOR THE SALE OF ALL ALCOHOLIC BEVERAGES IN A RESTAURANT FOR ON-PREMISES CONSUMPTION; MAKING SAID DESIGNATION SUBJECT TO CERTAIN CONDITIONS AND RESTRICTIONS CONTAINED HEREIN; CONTAINING A CUMULATIVE CLAUSE; CONTAINING A SAVINGS AND SEVERABILITY CLAUSE; PROVIDING FOR A MAXIMUM PENALTY OR FINE OF TWO THOUSAND DOLLARS ($2,000.00); AND ORDERING PUBLICATION (DISTRICT 2) (DEVELOPMENT SERVICES)

23. 10426 – AN ORDINANCE AMENDING THE ZONING DISTRICT MAP OF THE CITY OF MIDLAND TO GRANT A SPECIFIC USE DESIGNATION WITH TERM FOR A 6,529-SQUARE FOOT PORTION OF LOT 1, BLOCK 8, POLO PARK, SECTION 3, CITY AND COUNTY OF MIDLAND, TEXAS (GENERALLY LOCATED AT THE NORTHEAST CORNER OF THE INTERSECTION OF NORTH GARFIELD STREET AND WEST LOOP 250 NORTH), WHICH IS PRESENTLY ZONED PD, PLANNED DEVELOPMENT DISTRICT FOR A SHOPPING CENTER, ALLOWING SAID PROPERTY TO BE USED FOR THE SALE OF ALL ALCOHOLIC BEVERAGES IN A RESTAURANT FOR ON-PREMISES CONSUMPTION; MAKING SAID DESIGNATION SUBJECT TO CERTAIN CONDITIONS AND RESTRICTIONS CONTAINED HEREIN; CONTAINING A CUMULATIVE CLAUSE; CONTAINING A SAVINGS AND SEVERABILITY CLAUSE;

PROVIDING FOR A MAXIMUM PENALTY OR FINE OF TWO THOUSAND DOLLARS ($2,000.00); AND ORDERING PUBLICATION (DISTRICT 1) (DEVELOPMENT SERVICES)

MISCELLANEOUS

24. 085-2023 – MOTION APPROVING A REQUEST BY MAGRYM CONSULTING, INC., TO DEFER PAVING AND WATER IMPROVEMENTS FOR LINDSAY ACRES, SECTION 14, AND TO WAIVE THE CORRESPONDING FINANCIAL SECURITY GUARANTEE VALUED AT $269,089, AN AMOUNT EQUAL TO THE ESTIMATED COST TO CONSTRUCT THE PUBLIC INFRASTRUCTURE. THE SUBJECT PROPERTY IS GENERALLY LOCATED EAST OF MORAN STREET AND NORTH OF MARLIN AVENUE. THE PROPERTY IS WITHIN THE CORPORATE LIMITS OF THE CITY OF MIDLAND (DISTRICT 2) (ENGINEERING SERVICES)

25. 086-2023 – MOTION APPOINTING MR. TOMAS GONZALEZ AS THE NEW CITY MANAGER OF THE CITY OF MIDLAND EFFECTIVE JULY 31, 2023; AND AUTHORIZING THE MAYOR TO EXECUTE AN EMPLOYMENT AGREEMENT BETWEEN THE CITY OF MIDLAND AND THE CITY MANAGER

PUBLIC COMMENT

26. Receive public comments where individuals may address the City Council on City related issues and projects not on the present agenda. Any deliberation of or decision by the City Council regarding the item being discussed shall be limited to a motion to place the item on the agenda for a subsequent meeting. (Please limit comments to three minutes or less.)

EXECUTIVE SESSION

27. Pursuant to Texas Government Code § 551.101, the City Council will hold an Executive Session, which is closed to the public, to discuss the following matters as permitted under the following sections of the Texas Government Code:

    a. Section 551.074, Personnel Matters

    a.1. Deliberate the appointment, employment, evaluation, or duties of the City Manager.

    b. Section 551.072, Deliberation Regarding Real Property

    b.1. Discuss the purchase, exchange, lease or value of real property.

Respectfully Submitted,

Morris Williams Jr
Interim City Manager

MEETING ASSISTANCE INFORMATION: The Midland City Hall and Council Chamber are wheelchair accessible. If you need special assistance to participate in this meeting, please contact the City Secretary's Office at (432) 685-7430. Notification 48 hours prior to the meeting will enable the City to make reasonable arrangements to ensure accessibility to this meeting.

MIDLAND CITY COUNCIL
COUNCIL WORK SESSION
MINUTES
June 27, 2023

DRAFT

The City Council convened in a work session in the Basement Conference Room, City Hall, Midland, Texas, at 9:45 AM, June 27, 2023.

Council Members present:	Amy Stretcher Burkes, Dan Corrales, Robin Poole, Lori Blong, Scott Dufford, Jack Ladd, John Norman
Council Members absent:	None
Staff members present:	City Attorney John Ohnemiller, Interim City Manager Morris Williams Jr., Assistant City Manager Tina Jauz

The meeting was called to order at 9:45 a.m.

The following matter(s), and any matter listed on the agenda for this meeting, may be discussed by the City Council:

1. Receive an update from Executive Director Wes Faris regarding the I-20 Wildlife Preserve.

   Elane McGruder and Wes Faris provided a brief report of the I-20 Wildlife Preserve and ongoing projects such as the education program, wellness program, and land management/conservation program. Mr. Faris reviewed the up keep and maintenance of the preserve and how they are partnering with different corporations on projects. They are also working with the City of Midland Health Department to track and test mosquitos. Mr. Faris reported on several other initiatives they are involved in.

   Ms. Magruder, Board Director for the I-20 Wildlife Preserve, reported on the 3 phases of the master-plan, which is a $14 million project.

All the business at hand having been completed, the meeting adjourned at 10:01 a.m.

PASSED AND APPROVED July 11, 2023.

_____
Lori Blong, Mayor

ATTEST:

Marcia Bentley-German
City Governance Officer /City Secretary

DRAFT

MIDLAND CITY COUNCIL
MINUTES
June 27, 2023

The City Council convened in regular session in the Council Chamber, City Hall, Midland, Texas, at 10:00 a.m., June 27, 2023.

Council Members present:	Amy Stretcher Burkes, Dan Corrales, Robin Poole, Lori Blong, Scott Dufford, Jack Ladd, John Norman
Council Members absent:	None
Staff members present:	City Attorney John Ohnemiller, Interim City Manager Morris Williams Jr., Assistant City Manager Tina Jauz

The meeting was called to order at 10:05 a.m.

OPENING ITEMS

1. Invocation – Reverend Bob Hennagin, Episcopal Church of the Holy Trinity

2. Pledge of Allegiance

PRESENTATIONS

3. Presentation of special events, organizations, individuals, or periods of time including, but not limited to:

   3a. Presentation of Proclamation for “Bustin for Badges Day”

CONSENT AGENDA

4. MOTION APPROVING THE FOLLOWING MINUTES:

   4a. REGULAR SESSION OF JUNE 13, 2023

7. 2023-081 – RESOLUTION APPROVING A FIVE-YEAR CONTRACT WITH RINGCENTRAL, INC., THROUGH THE INTERLOCAL PURCHASING SYSTEM, FOR A CLOUD-BASED PHONE AND COMMUNICATIONS SYSTEM FOR A TOTAL COST OF $746,017.24 (DISTRICT: ALL) (GENERAL SERVICES)

DRAFT

8. 071-2023 – MOTION AUTHORIZING THE INTERIM CITY MANAGER OR THE INTERIM CITY MANAGER'S DESIGNEE TO ADVERTISE A REQUEST FOR PROPOSALS FOR SERVICES RELATED TO THE PREPARATION OF AN UPDATED COMPREHENSIVE PLAN, AND TO NEGOTIATE AN AGREEMENT FOR SAID SERVICES; PROVIDED, HOWEVER, THAT SAID AGREEMENT SHALL NOT BECOME EFFECTIVE UNTIL APPROVED BY THE CITY COUNCIL (DISTRICT: ALL) (GENERAL SERVICES)

9. 072-2023 – MOTION AUTHORIZING THE INTERIM CITY MANAGER OR THE INTERIM CITY MANAGER'S DESIGNEE TO ADVERTISE A REQUEST FOR QUALIFICATIONS FOR PROFESSIONAL ARCHITECTURE/ENGINEERING SERVICES FOR VARIOUS PROJECTS AT MIDLAND INTERNATIONAL AIR & SPACE PORT AND MIDLAND AIRPARK, AND TO NEGOTIATE PROFESSIONAL SERVICES AGREEMENTS FOR SAID SERVICES; PROVIDED, HOWEVER, THAT SAID AGREEMENT SHALL NOT BECOME EFFECTIVE UNTIL APPROVED BY THE CITY COUNCIL (DISTRICT 4) (GENERAL SERVICES)

10. 2023-082 – RESOLUTION AUTHORIZING THE PURCHASE OF A VXRAIL ADD-ON SERVER THROUGH THE TEXAS DEPARTMENT OF INFORMATION RESOURCES FROM CONVERGE TECHNOLOGY SOLUTIONS AT A TOTAL COST OF $139,893.63 (DISTRICT: NONE) (GENERAL SERVICES)

11. 073-2023 – MOTION AUTHORIZING THE INTERIM CITY MANAGER OR THE INTERIM CITY MANAGER'S DESIGNEE TO ADVERTISE A REQUEST FOR PROPOSALS FOR CERTAIN AIRPORT PASSENGER SERVICES AT MIDLAND INTERNATIONAL AIR & SPACE PORT AND MIDLAND AIRPARK, AND TO NEGOTIATE AN AGREEMENT FOR SAID SERVICES; PROVIDED, HOWEVER, THAT SAID AGREEMENT SHALL NOT BECOME EFFECTIVE UNTIL APPROVED BY THE CITY COUNCIL (DISTRICT 4) (GENERAL SERVICES)

12. 074-2023 – MOTION AUTHORIZING THE ACCEPTANCE OF GRANT FUNDS IN THE AMOUNT OF $150,358.00 FROM THE TEXAS DEPARTMENT OF STATE HEALTH SERVICES TO ASSIST THE CITY OF MIDLAND HEALTH SERVICES DIVISION WITH THE FUNDING AND DELIVERY OF IMMUNIZATION SERVICES; AUTHORIZING THE INTERIM CITY MANAGER OR THE INTERIM CITY MANAGER'S DESIGNEE TO EXECUTE ALL NECESSARY ACCEPTANCE DOCUMENTS; AND AUTHORIZING AND DIRECTING THE CITY TREASURER TO DEPOSIT SAID GRANT FUNDS INTO THE GENERAL FUND (DISTRICT: ALL) (COMMUNITY SERVICES)

13. 075-2023 – MOTION AUTHORIZING THE ACCEPTANCE OF GRANT FUNDS IN THE AMOUNT OF $175,014.00 FROM THE UNITED STATES COMMITTEE FOR REFUGEES AND IMMIGRANTS TO ASSIST THE CITY OF MIDLAND HEALTH SERVICES DIVISION WITH THE FUNDING AND DELIVERY OF REFUGEE IMMUNIZATION SERVICES; AUTHORIZING THE INTERIM CITY MANAGER OR THE INTERIM CITY MANAGER'S DESIGNEE TO EXECUTE ALL NECESSARY ACCEPTANCE DOCUMENTS; AND AUTHORIZING AND DIRECTING THE CITY TREASURER TO DEPOSIT SAID GRANT FUNDS INTO THE GENERAL FUND (DISTRICT: ALL) (COMMUNITY SERVICES)

DRAFT

14. 076-2023 – MOTION AUTHORIZING THE ACCEPTANCE OF GRANT FUNDS IN THE AMOUNT OF $111,630.00 FROM THE TEXAS DEPARTMENT OF STATE HEALTH SERVICES TO ASSIST THE CITY OF MIDLAND HEALTH SERVICES DIVISION WITH THE FUNDING AND DELIVERY OF LOCAL PUBLIC HEALTH SERVICES; AUTHORIZING THE INTERIM CITY MANAGER OR THE INTERIM CITY MANAGER'S DESIGNEE TO EXECUTE ALL NECESSARY ACCEPTANCE DOCUMENTS; AND AUTHORIZING AND DIRECTING THE CITY TREASURER TO DEPOSIT SAID GRANT FUNDS INTO THE GENERAL FUND (DISTRICT: ALL) (COMMUNITY SERVICES)

15. 2023-083 – RESOLUTION AUTHORIZING THE EXECUTION OF FOUR ADVANCE FUNDING AGREEMENTS WITH THE STATE OF TEXAS FOR THE REPLACEMENT OR REHABILITATION OF BRIDGES LOCATED AT OR ABOUT THE INTERSECTION OF NORTH MAIN STREET AND SCHARBAUER DRIVE, THE INTERSECTION OF NORTH LAMESA ROAD AND SCHARBAUER DRIVE, THE WESTBOUND LANES OF SCHARBAUER DRIVE AT MIDLAND DRAW, AND THE EASTBOUND LANES OF SCHARBAUER DRIVE AT MIDLAND DRAW; AUTHORIZING PAYMENT TO THE STATE OF TEXAS IN AN ESTIMATED AMOUNT OF $452,465.00; AND AUTHORIZING AND DIRECTING THE CITY SECRETARY TO CERTIFY A COPY OF THIS RESOLUTION TO THE STATE OF TEXAS (DISTRICT: NONE) (ENGINEERING SERVICES)

16. 2023-084 – RESOLUTION OF THE CITY COUNCIL OF THE CITY OF MIDLAND, TEXAS, APPROVING CERTAIN AMENDMENTS TO THE GENERAL ORDERS OF THE MIDLAND POLICE DEPARTMENT; AND PROVIDING THAT THE CITY COUNCIL IS THE POLICYMAKING AUTHORITY OF THE CITY OF MIDLAND (DISTRICT: NONE) (POLICE)

17. 077-2023 – MOTION AUTHORIZING THE EXECUTION OF A RIGHT-OF-WAY LICENSE (23-329-007) BETWEEN THE CITY OF MIDLAND AND GRAND PRIX PIPELINE LLC, REGARDING CITY-OWNED PROPERTY DESCRIBED AS SECTION 30, BLOCK 36, T-3-S, T&P RR CO. SURVEY, MIDLAND AND GLASSCOCK COUNTIES, TEXAS (DISTRICT: NONE) (UTILITIES)

Jack Ladd moved to approve consent agenda items 4 – 17, excluding items 5 & 6; seconded by John Norman.

The motion passed by the following vote:
AYE: Stretcher Burkes, Corrales, Poole, Blong, Dufford, Ladd, Norman
NAY: None
ABSTAIN: None
ABSENT: None

The following item(s) were pulled from consent agenda and considered individually.

5. 2023-079 – RESOLUTION APPROVING A CONTRACT WITH MUSCO CORPORATION DBA MUSCO SPORTS LIGHTING, LLC, THROUGH BUYBOARD, FOR THE PURCHASE AND INSTALLATION OF LED FIELD LIGHTING FOR THE WINDLANDS PARK SOCCER FIELDS FOR A TOTAL COST OF $1,065,906.00; APPROVING $106,594.00 FOR PROJECT RELATED COSTS; AND APPROPRIATING FUNDS FOR SAID CONTRACT

DRAFT

(DISTRICT 3) (GENERAL SERVICES)

Community Services Director Cristina Burns gave a brief overview of the item noting they are working on construction documents for the Reyes, Mashburn, Nelms master-plan. This plan will include taking out three soccer fields along Fairgrounds Road and replacing them with baseball fields. It will also include adding lighting to the Windlands soccer fields.

John Norman moved to approve Resolution No. 2023-079; seconded by Jack Ladd.

The motion passed by the following vote:
AYE: Stretcher Burkes, Corrales, Poole, Blong, Dufford, Ladd, Norman
NAY: None
ABSTAIN: None
ABSENT: None

6. 2023-080 – RESOLUTION APPROVING A THREE-YEAR CONTRACT WITH TEXAS HIGHWAY PRODUCTS, LTD., THROUGH BUYBOARD, FOR A CLOUD-BASED TRAFFIC MANAGEMENT SYSTEM FOR A TOTAL COST OF $117,000.00 (DISTRICT: ALL) (GENERAL SERVICES)

Senior Engineering Manager Gabriel McClelland gave a brief overview of the item noting how this will help signal lights function correctly. Chief Information Technology Director Jennifer Fresca reported on the security component. The current hardware is out of date and needs to be updated.

Jack Ladd moved to approve Resolution No. 2023-080; seconded by Robin Poole.

The motion passed by the following vote:
AYE: Stretcher Burkes, Corrales, Poole, Blong, Dufford, Ladd, Norman
NAY: None
ABSTAIN: None
ABSENT: None

SECOND READINGS

18. 10411 – AN ORDINANCE AMENDING THE ZONING DISTRICT MAP OF THE CITY OF MIDLAND TO REZONE LOT 7 AND THE WEST 41.5 FEET OF LOT 8, BLOCK 35, COWDEN ADDITION, CITY AND COUNTY OF MIDLAND, TEXAS, FROM MF-16, MULTIPLE-FAMILY DWELLING DISTRICT TO SF-3, SINGLE-FAMILY DWELLING DISTRICT (GENERALLY LOCATED AT THE NORTHEAST CORNER OF THE INTERSECTION OF NORTH PECOS STREET AND WATSON STREET); CONTAINING A CUMULATIVE CLAUSE; CONTAINING A SAVINGS AND SEVERABILITY CLAUSE; PROVIDING FOR A MAXIMUM PENALTY OR FINE OF TWO THOUSAND DOLLARS ($2,000.00); AND ORDERING PUBLICATION (DISTRICT 3) (DEVELOPMENT SERVICES) (FIRST READING HELD JUNE 13, 2023)

Deputy City Secretary Jan Hamilton read the caption of Ordinance No. 10411.

Jack Ladd moved to approve the second and final reading of Ordinance No. 10411;

DRAFT

seconded by John Norman.

The motion passed by the following vote:
AYE: Stretcher Burkes, Corrales, Poole, Blong, Dufford, Ladd, Norman
NAY: None
ABSTAIN: None
ABSENT: None

19. 10412 – AN ORDINANCE AMENDING THE ZONING DISTRICT MAP OF THE CITY OF MIDLAND TO REZONE LOT 1, BLOCK 1, RENEW LIFE CHURCH ADDITION, CITY AND COUNTY OF MIDLAND, TEXAS, FROM AE, AGRICULTURAL ESTATE DISTRICT TO MF-16, MULTIPLE-FAMILY DWELLING DISTRICT (GENERALLY LOCATED ON THE NORTH SIDE OF OCCIDENTAL PARKWAY, APPROXIMATELY 280 FEET EAST OF NORTH STATE HIGHWAY 349); CONTAINING A CUMULATIVE CLAUSE; CONTAINING A SAVINGS AND SEVERABILITY CLAUSE; PROVIDING FOR A MAXIMUM PENALTY OR FINE OF TWO THOUSAND DOLLARS ($2,000.00); AND ORDERING PUBLICATION (DISTRICT 1) (DEVELOPMENT SERVICES) (FIRST READING HELD JUNE 13, 2023)

Deputy City Secretary Jan Hamilton read the caption of Ordinance No. 10412.

John Norman moved to approve the second and final reading of Ordinance No. 10412; seconded by Robin Poole.

The motion passed by the following vote:
AYE: Stretcher Burkes, Corrales, Poole, Blong, Dufford, Ladd, Norman
NAY: None
ABSTAIN: None
ABSENT: None

20. 10413 – AN ORDINANCE EXTENDING THE BOUNDARIES OF THE CITY OF MIDLAND, TEXAS, BY ADDING THERETO A CERTAIN AREA ADJOINING THE PRESENT CITY LIMITS, BEING A 24.897-ACRE TRACT OF LAND OUT OF SECTIONS 38 AND 47, BLOCK 40, T-1-S, T&P RR CO. SURVEY, MIDLAND COUNTY, TEXAS (GENERALLY LOCATED AT THE SOUTHEAST CORNER OF THE INTERSECTION OF POTOMAC PARKWAY AND VICTORY PARKWAY); ORDERING PUBLICATION; AND ORDERING RECORDATION BY THE CITY SECRETARY (DISTRICT: NONE) (DEVELOPMENT SERVICES) (FIRST READING HELD JUNE 13, 2023)

Deputy City Secretary Jan Hamilton read the caption of Ordinance No. 10413.

Jack Ladd moved to approve the second and final reading of Ordinance No. 10413; seconded by John Norman.

The motion passed by the following vote:
AYE: Stretcher Burkes, Corrales, Poole, Blong, Dufford, Ladd, Norman
NAY: None
ABSTAIN: None
ABSENT: None

DRAFT

21. 10414 – AN ORDINANCE ESTABLISHING THE INITIAL ZONING CLASSIFICATION OF THE AREA INDICATED AS BEING A 24.897-ACRE TRACT OF LAND OUT OF SECTIONS 38 AND 47, BLOCK 40, T-1-S, T&P RR CO. SURVEY, MIDLAND COUNTY, TEXAS, AS AN SF-3, SINGLE-FAMILY DWELLING DISTRICT; SAID TRACT BEING GENERALLY LOCATED AT THE SOUTHEAST CORNER OF THE INTERSECTION OF POTOMAC PARKWAY AND VICTORY PARKWAY; CONTAINING A CUMULATIVE CLAUSE; CONTAINING A SAVINGS AND SEVERABILITY CLAUSE; PROVIDING FOR A MAXIMUM PENALTY OR FINE OF TWO THOUSAND DOLLARS ($2,000.00); AND ORDERING PUBLICATION (DISTRICT: NONE) (DEVELOPMENT SERVICES) (FIRST READING HELD JUNE 13, 2023)

Deputy City Secretary Jan Hamilton read the caption of Ordinance No. 10414.

Jack Ladd moved to approve the second and final reading of Ordinance No. 10414; seconded by Robin Poole.

The motion passed by the following vote:
AYE: Stretcher Burkes, Corrales, Poole, Blong, Dufford, Ladd, Norman
NAY: None
ABSTAIN: None
ABSENT: None

22. 10415 – AN ORDINANCE GRANTING A SPECIAL EXCEPTION FOR LOT 10, BLOCK 18, FAIRMONT PARK ADDITION, CITY AND COUNTY OF MIDLAND, TEXAS (GENERALLY LOCATED ON THE EAST SIDE OF CLAREMONT DRIVE, APPROXIMATELY 154 FEET NORTH OF TREMONT AVENUE), BY PERMITTING A REDUCED MINIMUM REAR YARD SETBACK AND A REDUCED MINIMUM SEPARATION OF THE ACCESSORY BUILDING FROM THE PRINCIPAL BUILDING; CONTAINING A CUMULATIVE CLAUSE; CONTAINING A SAVINGS AND SEVERABILITY CLAUSE; PROVIDING FOR A MAXIMUM PENALTY OR FINE OF TWO THOUSAND DOLLARS ($2,000.00); ORDERING RECORDATION BY THE CITY SECRETARY IN THE DEED RECORDS OF MIDLAND COUNTY, TEXAS; AND ORDERING PUBLICATION (DISTRICT 1) (DEVELOPMENT SERVICES) (FIRST READING HELD JUNE 13, 2023)

Deputy City Secretary Jan Hamilton read the caption of Ordinance No. 10415.

John Norman moved to approve the second and final reading of Ordinance No. 10415; seconded by Dan Corrales.

The motion passed by the following vote:
AYE: Stretcher Burkes, Corrales, Poole, Blong, Dufford, Ladd, Norman
NAY: None
ABSTAIN: None
ABSENT: None

23. 10416 – AN ORDINANCE GRANTING A SPECIAL EXCEPTION FOR THE EAST 86 FEET OF LOT 21, BLOCK 6, WESTERN MESA ADDITION, CITY AND COUNTY OF MIDLAND, TEXAS (GENERALLY LOCATED AT THE SOUTHWEST CORNER OF THE INTERSECTION OF WEST PINE AVENUE AND NORTH I STREET), BY PERMITTING A

DRAFT

REDUCED MINIMUM REAR YARD SETBACK AND A REDUCED MINIMUM SIDE YARD SETBACK ON THE EAST SIDE OF THE PROPERTY; CONTAINING A CUMULATIVE CLAUSE; CONTAINING A SAVINGS AND SEVERABILITY CLAUSE; PROVIDING FOR A MAXIMUM PENALTY OR FINE OF TWO THOUSAND DOLLARS ($2,000.00); ORDERING RECORDATION BY THE CITY SECRETARY IN THE DEED RECORDS OF MIDLAND COUNTY, TEXAS; AND ORDERING PUBLICATION (DISTRICT 3) (DEVELOPMENT SERVICES) (FIRST READING HELD JUNE 13, 2023)

Deputy City Secretary Jan Hamilton read the caption of Ordinance No. 10416.

Jack Ladd moved to approve the second and final reading of Ordinance No. 10416; seconded by Dan Corrales.

The motion passed by the following vote:
AYE: Stretcher Burkes, Corrales, Poole, Blong, Dufford, Ladd, Norman
NAY: None
ABSTAIN: None
ABSENT: None

PUBLIC HEARINGS

The City Council will hold public hearings on the following items:

24. 10417 – AN ORDINANCE VACATING AND ABANDONING A 0.069-ACRE PORTION OF ALLEY RIGHT-OF-WAY LOCATED ADJACENT TO LOTS 1 THROUGH 3 AND LOTS 6 THROUGH 8, BLOCK 75, WEST END ADDITION, CITY AND COUNTY OF MIDLAND, TEXAS (GENERALLY LOCATED ON THE EAST SIDE OF ANDREWS HIGHWAY, APPROXIMATELY 200 FEET SOUTH OF WEST TEXAS AVENUE); ADOPTING THE APPRAISAL BY THE CITY MANAGER OF $12,024.00; RETAINING A NONEXCLUSIVE UTILITY EASEMENT; AND ORDERING RECORDATION BY THE CITY SECRETARY (DISTRICT 3) (DEVELOPMENT SERVICES)

Deputy City Secretary Jan Hamilton read the caption of Ordinance No. 10417.

Development Services Director Chuck Harrington gave a brief overview of the item noting this is a vacation requested on behalf of the hospital that own properties nearby. The vacation would bring in around $12,000 in funds to the City.

Mayor Blong opened the public hearing at 10:23 a.m. There being no one present wishing to speak, the public hearing was immediately closed.

John Norman moved to approve the first of two readings of Ordinance No. 10417; seconded by Dan Corrales.

The motion passed by the following vote:
AYE: Stretcher Burkes, Corrales, Poole, Blong, Dufford, Ladd, Norman
NAY: None
ABSTAIN: None
ABSENT: None

DRAFT

25. 2023-085 – RESOLUTION AUTHORIZING THE TEMPORARY USE OF LAND FOR A BLOCK PARTY ON A 0.22-ACRE PORTION OF EAST TEXAS AVENUE RIGHT-OF-WAY LOCATED ADJACENT TO LOT 24, BLOCK 53, CITY AND COUNTY OF MIDLAND, TEXAS (GENERALLY LOCATED ON THE EAST SIDE OF THE INTERSECTION OF NORTH MAIN STREET AND EAST TEXAS AVENUE) SUBJECT TO CERTAIN SPECIAL CONDITIONS AND RESTRICTIONS (DISTRICT 2) (DEVELOPMENT SERVICES)

Development Services Director Chuck Harrington gave a brief overview of the item noting the request is for an open block party on Texas Ave. Staff has reviewed the item and has no issues with proceeding.

Mayor Blong opened the public hearing at 10:25 a.m. There being no one present wishing to speak, the public hearing was immediately closed.

John Norman moved to approve Resolution No. 2023-085; seconded by Jack Ladd.

The motion passed by the following vote:
AYE: Stretcher Burkes, Corrales, Poole, Blong, Dufford, Ladd, Norman
NAY: None
ABSTAIN: None
ABSENT: None

26. 10418 – AN ORDINANCE AMENDING THE ZONING DISTRICT MAP OF THE CITY OF MIDLAND TO REZONE LOT 2E, BLOCK 33, NORTHGATE ADDITION, SECTION 21, CORRECTION PLAT, CITY AND COUNTY OF MIDLAND, TEXAS, FROM PD, PLANNED DEVELOPMENT DISTRICT FOR A SHOPPING CENTER TO AN AMENDED PD, PLANNED DEVELOPMENT DISTRICT FOR A SHOPPING CENTER (GENERALLY LOCATED AT THE NORTHEAST CORNER OF NORTHCREST DRIVE AND WEST LOOP 250 NORTH); CONTAINING A CUMULATIVE CLAUSE; CONTAINING A SAVINGS AND SEVERABILITY CLAUSE; PROVIDING FOR A MAXIMUM PENALTY OR FINE OF TWO THOUSAND DOLLARS ($2,000.00); AND ORDERING PUBLICATION (DISTRICT 1) (DEVELOPMENT SERVICES)

Deputy City Secretary Jan Hamilton read the caption of Ordinance No. 10418.

Mayor Blong opened the public hearing at 10:26 a.m. There being no one present wishing to speak, the public hearing was immediately closed.

Amy Stretcher Burkes moved to approve the first of two readings of Ordinance No. 10418; seconded by Dan Corrales.

The motion passed by the following vote:
AYE: Stretcher Burkes, Corrales, Poole, Blong, Dufford, Ladd, Norman
NAY: None
ABSTAIN: None
ABSENT: None

27. 10419 – AN ORDINANCE VACATING AND ABANDONING A 0.03-ACRE PORTION OF MADISON STREET RIGHT-OF-WAY AND A 0.03-ACRE PORTION OF CARVER STREET

DRAFT

RIGHT-OF-WAY, BOTH LOCATED ADJACENT TO BLOCK 9, EAST MIDLAND ADDITION, CITY AND COUNTY OF MIDLAND, TEXAS (GENERALLY LOCATED AT THE SOUTHEAST CORNER OF THE INTERSECTION OF GARDEN LANE AND MADISON STREET AND AT THE SOUTHWEST CORNER OF THE INTERSECTION OF GARDEN LANE AND CARVER STREET); ADOPTING THE APPRAISAL BY THE CITY MANAGER OF $5,227.20; RETAINING A NONEXCLUSIVE UTILITY EASEMENT; AND ORDERING RECORDATION BY THE CITY SECRETARY (DISTRICT 2) (DEVELOPMENT SERVICES)

Deputy City Secretary Jan Hamilton read the caption of Ordinance No. 10419.

Mayor Blong opened the public hearing at 10:27 a.m. There being no one present wishing to speak, the public hearing was immediately closed.

John Norman moved to approve the first of two readings of Ordinance No. 10419; seconded by Robin Poole.

The motion passed by the following vote:
AYE: Stretcher Burkes, Corrales, Poole, Blong, Dufford, Ladd, Norman
NAY: None
ABSTAIN: None
ABSENT: None

MISCELLANEOUS

28. 078-2023 – DISCUSS POLICY MATTERS RELATED TO THE CITY OF MIDLAND ANIMAL SERVICES DIVISION'S OPERATION OF THE MIDLAND ANIMAL SHELTER. THE CITY COUNCIL MAY CONSIDER AND TAKE ACTION UPON A MOTION REGARDING SAID MATTERS

Janet Harris, 2201 Shell, had several questions for Council and the Interim City Manager that ranged from leash laws to dogs roaming the streets.

Community Services Director Cristina Burns reported on laws about dogs roaming the street and fines.

Evelyn Burgos, West Ohio, gave Council a scenario and reported that animals are beings with feelings that should be treated with respect. Ms. Burgos wanted to know if there was something that could be done about the voucher program.

Interim City Manager Morris Williams gave a brief report on the shared progress with the City of Odessa in finding a Veterinarian to service both Cities.

Shelly Almuina, 3112 Barkley, spoke on the increase of abuse and abandonment of animals and would like to know if there is a policy to help the situation.

Mayor Blong spoke on the love and support she and the Council have for animals.

Council Member Dufford reported on citizens being proactive and calling the police when

DRAFT

animals are being neglected and left in dangerous situations.

Ty Coleman, W. Michigan Ave., would like to know what policy has been put in place since the last death of an animal in a vehicle.

COUNCIL TOOK NO ACTION.

PUBLIC COMMENT

29. Receive public comments where individuals may address the City Council on City related issues and projects not on the present agenda. Any deliberation of or decision by the City Council regarding the item being discussed shall be limited to a motion to place the item on the agenda for a subsequent meeting. (Please limit comments to three minutes or less.)

Ty Coleman, W. Michigan Ave., spoke on wasteful spending and several other topics.

Janet Harris, 2201 Shell Ave., spoke on unequal treatment regarding the time limit of speaking during the Council Meeting.

Shelly Almuina, 3112 Barkley, would like to see change happen in the Animal Shelter and within the community.

EXECUTIVE SESSION

30. Pursuant to Texas Government Code § 551.101, the City Council will hold an Executive Session, which is closed to the public, to discuss the following matters as permitted under the following sections of the Texas Government Code:

Mayor Blong recessed the City Council meeting to go into Executive Session at 11:09 a.m.

a. Section 551.074, Personnel Matters

a.1. Deliberate the appointment, employment, evaluation, or duties of the City Manager.

b. Section 551.071, Consultation with Attorney

b.1. Discuss a matter in which the duty of the attorney to the governmental body under the Texas Disciplinary Rules of Professional Conduct of the State Bar of Texas clearly conflicts with Chapter 551 of the Texas Government Code.

All the business at hand having been completed, the meeting adjourned at 1:44 p.m.

PASSED AND APPROVED July 11, 2023.

_____

Lori Blong, Mayor

ATTEST:

DRAFT

Marcia Bentley-German
City Governance Officer/City Secretary

DRAFT

CITY OF MIDLAND, TEXAS
MIDLAND CITY COUNCIL
SPECIAL MINUTES
June 27, 2023

DRAFT

The City Council convened in **Special** Session in the Bush Convention Center, Midland, Texas, at 2:00 PM, Tuesday, June 27, 2023.

Council Members present:	Amy Stretcher Burkes, Dan Corrales, Robin Poole, Lori Blong, Scott Dufford, Jack Ladd, John Norman
Council Members absent:	None
Staff members present:	City Attorney John Ohnemiller, Interim City Manager Morris Williams Jr., Assistant City Manager Tina Jauz

The meeting was called to order at 2:00 p.m.

SPECIAL SESSION

1. Attend a press conference held by Mayor Lori Blong regarding the Midland Firemen's Relief and Retirement Fund.

   Mayor Blong, Midland Chamber of Commerce President & CEO Bobby Burns, Former Midland Firefighter & Board Trustee Chad Clark, and Midland Fire Chief Chuck Blumenauer spoke and answered questions regarding the sustainability issues with the Midland Firemen's Relief and Retirement Fund.

   Chief Blumenauer reported on growth and staffing levels from 2017 until today.

   Mayor Blong reported that she and the Council are committed to seeing this issue solved. Mayor Blong also reported that several consulting firms have been identified to assit.

   The group took questions from the audience.

All the business at hand having been completed, the meeting adjourned at 2:15 p.m.

PASSED AND APPROVED July 11, 2023.

Lori Blong, Mayor

ATTEST:

Marcia Bentley-German
City Governance Officer/City Secretary

DRAFT

City Council Meeting

Item Number: 5

Meeting Date: July 11, 2023

To: City Council / City Manager

From: Erika Martinez, Manager, Purchasing

Subject: **RESOLUTION AWARDING A CONTRACT FOR THE T23-03 TRAFFIC SIGNAL PROJECT TO THE SOLE BIDDER, WILLIS ELECTRIC CO., LP OF ABILENE, TEXAS, AT A TOTAL COST OF $1,961,083.80; APPROVING $196,108.38 FOR CONTINGENCIES; TRANSFERRING AND APPROPRIATING FUNDS; AND AUTHORIZING PAYMENT (DISTRICT: ALL) (GENERAL SERVICES)**

Purpose:

Resolution awarding a contract for the T23-03 Traffic Signal Projects for the Traffic Division to the sole bidder Willis Electric Co., LP, of Abilene, Texas for a cost of $1,961,083.80 plus $196,108.38 in contingencies.

Recommended City Council Action:

Approve

Fiscal Impact:

$431,394.62 is available in the Hwy 349 from 250 Loop to Martin Co. Project, and $1,725,257.56 is available in the General Fund unappropriated fund balance and will be transferred and appropriated to a project.

Discussion:

The City Manager approved plans and specifications and authorized advertisement for bids for the T23-03 Traffic Signal Project for the Traffic Division. The bid request was sent to twenty-two (22) companies. We received a sole bid. Staff recommends awarding a contract to the sole bidder Willis Electric Co., LP. Please see the attached memo from Taha Sakrani, Senior Associate Traffic Engineer, for more information.

Therefore, please consider a resolution awarding a contract for the T23-03 Traffic Signal Projects for the Traffic Division to the sole bidder Willis Electric Co., LP, of Abilene, Texas for a cost of $1,961,083.80 plus $196,108.38 in contingencies for a total project cost of $2,157,192.18.

Tina Daugherty

City Manager's Office

INTEROFFICE MEMORANDUM

TO: Erika Munoz Martinez; City of Midland, Purchasing Manager

FROM: Taha Sakrani, P.E.; City of Midland, Senior Associate Traffic Engineer

SUBJECT: Traffic Signal ♦ Project T23-03 ♦ Bid Tabulation

DATE: June 20, 2023

We have reviewed the bid tabulation for the Traffic Signal project. Willis Electric Co. of Abilene, Texas, is the sole bidder, and therefore is the apparent low bidder. Staff recommends awarding the Traffic Signal project to Willis Electric Co. for a total amount not to exceed $2,157,192.18 ($1,961,083.80 bid plus $196,108.38 contingency).

Willis Electric Co. has an established history in the City of Midland and has performed to the City's satisfaction throughout the course of previous traffic signal projects.

Thank you for your assistance throughout the bidding and contracting process.

Taha Sakrani

Taha Sakrani, P.E.
Senior Associate Traffic Engineer

RESOLUTION NO. _____

RESOLUTION AWARDING A CONTRACT FOR THE T23-03 TRAFFIC SIGNAL PROJECT TO THE SOLE BIDDER, WILLIS ELECTRIC CO., LP OF ABILENE, TEXAS, AT A TOTAL COST OF $1,961,083.80; APPROVING $196,108.38 FOR CONTINGENCIES; TRANSFERRING AND APPROPRIATING FUNDS; AND AUTHORIZING PAYMENT

WHEREAS, the Interim City Manager approved the plans and specifications and advertised for competitive bids for the T23-03 Traffic Signal Project (the "Project"); and

WHEREAS, Bid No. 23003406 was opened on June 14, 2023, with the sole bidder and lowest responsible bidder being Willis Electric Co., LP of Abilene, Texas ("Contractor"), having submitted a bid of $1,961,083.80 as shown on the bid tabulation attached hereto as Exhibit "A" and incorporated herein for all legal purposes; and

WHEREAS, the total cost of the work to be completed, according to the previously advertised plans and specifications and the unit prices in Exhibit "A", shall not exceed $1,961,083.80; and

WHEREAS, the City Council finds it to be in the public interest to execute a contract with Contractor for said Project;

NOW, THEREFORE, BE IT RESOLVED BY THE CITY COUNCIL OF THE CITY OF MIDLAND, TEXAS:

SECTION ONE. That the Interim City Manager and City Secretary are hereby authorized and directed to execute and attest, respectively, on behalf of the City of Midland, a contract with Contractor for said Project at a total cost of $1,961,083.80, said contract being on file in the office of the City Secretary, referenced by the date and number of this resolution.

SECTION TWO. That the Interim City Manager is hereby authorized and directed to execute, on behalf of the City of Midland, change orders to said contract if (1) each change order involves a decrease or an increase of $50,000.00 or less and (2) the change orders, in total, do not increase the original contract price by more than 10 percent ($196,108.38).

SECTION THREE. That the sum of $431,934.62 is available in the Hwy 349 from 250 Loop to Martin Co. Project, and the sum of $1,725,257.56 is available in the General Fund operating budget and shall be transferred and appropriated to a project account for said Project. The sum of $196,108.38 is approved for contract contingencies.

SECTION FOUR. That the City Comptroller is hereby authorized and directed to pay Contractor pursuant to the terms of said contract and change orders executed in accordance with this resolution in an amount not to exceed $2,157,192.18 from funds referenced in Section Three hereof upon receipt of proper invoices or statements approved by the Interim City Manager.

On motion of Council member _____, seconded by Council member _____, the above and foregoing resolution was adopted by the City Council of the City of Midland at a regular meeting on the _____ day of _____, A.D., 2023, by the following vote:

Council members voting "AYE":

Council members voting "NAY":

_____
Lori Merritt Blong, Mayor

ATTEST:

_____
Marcia Bentley-German, City Secretary

RECOMMENDED AND APPROVED:

_____
Morris Williams, Jr., Interim City Manager

APPROVED AS TO CONTENT
AND COMPLETENESS:

_____
Regina Stephenson, General Services Director

_____
Jose Ortiz, Engineering Services Director

APPROVED ONLY AS TO FORM:

_____
John Ohnemiller, City Attorney

Base Bid - Big Spring St and Lonestar Traffic Signal 23003406					
				Willis Electric	
ITEM NO.	**DESCRIPTION**	**UNIT**	**ESTIMATED QUANTITY**	**UNIT PRICE**	**TOTAL AMOUNT BID**
BB1	REMOVING CONC (CURB AND GUTTER)	LF	122	$17.25	$ 2,104.50
BB2	REMOV STAB BASE AND ASPH PAV (0"-12")	SY	271	$25.50	$ 6,910.50
BB3	FL BS (CMP IN PLACE)(TY A GR 1-2)(8")	SY	202	$51.00	$ 10,302.00
BB4	DRILL SHAFT (TRF SIG POLE) (36 IN)	LF	26	$650.00	$ 16,900.00
BB5	DRILL SHAFT (TRF SIG POLE) (48 IN)	LF	50	$950.00	$ 47,500.00
BB6	MOBILIZATION	LS	1	$225,000.00	$ 225,000.00
BB7	BARRICADES, SIGNS AND TRAFFIC HANDLING	MO	2	$1,300.00	$ 2,600.00
BB8	CONC CURB & GUTTER (TY A)	LF	115	$72.00	$ 8,280.00
BB9	INTRSCT, DRVWAYS, & TURNOUT (CONC)	SY	145	$255.00	$ 36,975.00
BB10	CONC SIDEWALKS (6")	SY	19	$375.00	$ 7,125.00
BB11	CURB RAMPS (TY 7)	EA	2	$5,750.00	$ 11,500.00
BB12	WIRE FENCE (TY A)	LF	140	$92.00	$ 12,880.00
BB13	GATE (TY 1)	EA	2	$2,600.00	$ 5,200.00
BB14	CONDT (PVC) (SCH 40) (2")	LF	135	$20.00	$ 2,700.00
BB15	CONDT (PVC) (SCH 40) (3")	LF	80	$30.00	$ 2,400.00
BB16	CONDT (PVC) (SCH 40) (4")	LF	20	$40.00	$ 800.00
BB17	CONDT (PVC) (SCH 40) (4") (BORE)	LF	400	$65.00	$ 26,000.00
BB18	CONDT (PVC) (SCH 80) (2")	LF	10	$30.00	$ 300.00
BB19	ELEC CONDR (NO.12) INSULATED	LF	170	$2.00	$ 340.00
BB20	ELEC CONDR (NO.8) INSULATED	LF	630	$2.50	$ 1,575.00
BB21	ELEC CONDR (NO.6) BARE	LF	605	$2.75	$ 1,663.75
BB22	ELEC CONDR (NO.6) INSULATED	LF	210	$3.00	$ 630.00
BB23	GROUND BOX TY C (162911)W/APRON	EA	5	$3,000.00	$ 15,000.00
BB24	ELC SRV TY D 120/240 070(NS)SS(E)SP(U)	EA	1	$12,500.00	$ 12,500.00
BB25	IN SM RD SN SUP&AM TYS80(1)SA(U)	EA	3	$2,000.00	$ 6,000.00
BB26	REMOVE SM RD SN SUP&AM	EA	1	$250.00	$ 250.00
BB27	REFL PAV MRK TY I (W)8"(SLD)(100MIL)	LF	170	$8.50	$ 1,445.00
BB28	REFL PAV MRK TY I (W)12"(SLD)(090MIL)	LF	258	$11.00	$ 2,838.00
BB29	REFL PAV MRK TY I (W)24"(SLD)(090MIL)	LF	122	$22.00	$ 2,684.00

BB30	PAVEMENT SEALER 8"	LF	170	$2.50	$ 425.00
BB31	PAVEMENT SEALER 12"	LF	258	$5.00	$ 1,290.00
BB32	PAVEMENT SEALER 24"	LF	122	$7.00	$ 854.00
BB33	PAVEMENT SEALER (ARROW)	EA	4	$165.00	$ 660.00
BB34	PAVEMENT SEALER (WORD)	EA	2	$220.00	$ 440.00
BB35	PREFAB PAV MRK TY C (W) (ARROW)	EA	4	$440.00	$ 1,760.00
BB36	PREFAB PAV MRK TY C (W) (WORD)	EA	2	$550.00	$ 1,100.00
BB37	ELIM EXT PAV MRK & MRKS (4")	LF	520	$5.50	$ 2,860.00
BB38	ELIM EXT PAV MRK & MRKS (24")	LF	12	$27.50	$ 330.00
BB39	PAV SURF PREP FOR MRK (8")	LF	170	$2.50	$ 425.00
BB40	PAV SURF PREP FOR MRK (12")	LF	258	$5.00	$ 1,290.00
BB41	PAV SURF PREP FOR MRK (24")	LF	122	$7.00	$ 854.00
BB42	PAV SURF PREP FOR MRK (ARROW)	EA	4	$165.00	$ 660.00
BB43	PAV SURF PREP FOR MRK (WORD)	EA	2	$220.00	$ 440.00
BB44	PAV SURF PREP FOR MRK (RPM)	EA	22	$27.50	$ 605.00
BB45	INS HY TRF SIG (DPT SUP CNT & CAB)(ISO)	EA	1	$30,000.00	$ 30,000.00
BB46	VEH SIG SEC (12")LED(GRN)	EA	12	$450.00	$ 5,400.00
BB47	VEH SIG SEC (12")LED(GRN ARW)	EA	2	$450.00	$ 900.00
BB48	VEH SIG SEC (12")LED(YEL)	EA	12	$450.00	$ 5,400.00
BB49	VEH SIG SEC (12")LED(YEL ARW)	EA	4	$450.00	$ 1,800.00
BB50	VEH SIG SEC (12")LED(RED)	EA	12	$450.00	$ 5,400.00
BB51	VEH SIG SEC (12")LED(RED ARW)	EA	4	$450.00	$ 1,800.00
BB52	PED SIG SEC (LED)(COUNTDOWN)	EA	4	$1,000.00	$ 4,000.00
BB53	BACKPLATE W/REFL BRDR(3 SEC)ALUM	EA	12	$250.00	$ 3,000.00
BB54	BACKPLATE W/REFL BRDR(5 SEC)ALUM	EA	2	$275.00	$ 550.00
BB55	TRF SIG CBL (TY A)(12 AWG)(2 CONDR)	LF	495	$3.00	$ 1,485.00
BB56	TRF SIG CBL (TY A)(14 AWG)(5 CONDR)	LF	530	$3.50	$ 1,855.00
BB57	TRF SIG CBL (TY A)(14 AWG)(7 CONDR)	LF	145	$5.00	$ 725.00
BB58	TRF SIG CBL (TY A)(14 AWG)(20 CONDR)	LF	520	$10.00	$ 5,200.00
BB59	INS TRF SIG PL AM(S)1 ARM(36')LUM&ILSN	EA	1	$2,000.00	$ 2,000.00
BB60	INS TRF SIG PL AM(S)1 ARM(44')LUM&ILSN	EA	1	$3,500.00	$ 3,500.00
BB61	INS TRF SIG PL AM(S)1 ARM(55')ILSN	EA	1	$4,500.00	$ 4,500.00
BB62	INS TRF SIG PL AM(S)1 ARM(55')LUM&ILSN	EA	1	$5,000.00	$ 5,000.00
BB63	PED POLE ASSEMBLY	EA	2	$3,000.00	$ 6,000.00

BB64	PED DETECT PUSH BUTTON (APS)	EA	4	$1,000.00	$ 4,000.00
BB65	PED DETECTOR CONTROLLER UNIT	EA	1	$6,000.00	$ 6,000.00
BB66	D-GR HMA TY-C PG70-22	TON	22	$710.00	$ 15,620.00
BB67	D-GR HMA TY-D PG70-22	TON	22	$710.00	$ 15,620.00
BB68	RVDS (PRESENCE DET ONLY) (INSTALL ONLY)	EA	2	$1,000.00	$ 2,000.00
BB70	OWNER'S ALLOWANCE (SEE PAY NOTES)	LS	1	$50,000.00	$ 50,000.00
BASE BID SUBTOTAL				$	666,150.75

Additive Alternative 1 - Andrews HWY and Woodcrest Traffic Signal

ITEM NO.	DESCRIPTION	UNIT	ESTIMATED QUANTITY	UNIT PRICE	TOTAL AMOUNT BID
AA1-1	REMOVE CONC (SIDEWALK OR RAMP)	SY	50	$95.00	$ 4,750.00
AA1-2	REMOVE SM RD SN SUP&AM	EA	2	$200.00	$ 400.00
AA1-3	RELOCATE SM RD SN SUP&AM	EA	1	$1,000.00	$ 1,000.00
AA1-4	DRILL SHAFT (TRF SIG POLE) (30 IN)	LF	12	$600.00	$ 7,200.00
AA1-5	DRILL SHAFT (TRF SIG POLE) (48 IN)	LF	66	$950.00	$ 62,700.00
AA1-6	CONDT (PVC) (SCH 40) (2")	LF	13	$20.00	$ 260.00
AA1-7	CONDT (PVC) (SCH 40) (3")	LF	112	$30.00	$ 3,360.00
AA1-8	CONDT (PVC) (SCH 40) (3") (BORE)	LF	387	$55.00	$ 21,285.00
AA1-9	CONDT (PVC) (SCH 40) (4")	LF	6	$40.00	$ 240.00
AA1-10	ELEC CONDR (NO. 6) BARE	LF	464	$2.75	$ 1,276.00
AA1-11	ELEC CONDR (NO. 6) INSULATED	LF	14	$3.00	$ 42.00
AA1-12	TRAY CABLE (4 CONDR) (12 AWG)	LF	697	$13.00	$ 9,061.00
AA1-13	GROUND BOX TY D (162922)W/APRON	EA	4	$3,500.00	$ 14,000.00
AA1-14	ELC SRV TY D 120/240 060(NS)SS(E)PS(U)	EA	1	$12,500.00	$ 12,500.00
AA1-15	INSTALL HWY TRF SIG (ISOLATED)	EA	1	$30,000.00	$ 30,000.00
AA1-16	VEH SIG SEC (12")LED(GRN)	EA	8	$450.00	$ 3,600.00
AA1-17	VEH SIG SEC (12")LED(GRN ARROW)	EA	5	$450.00	$ 2,250.00
AA1-18	VEH SIG SEC (12")LED(YEL)	EA	8	$450.00	$ 3,600.00
AA1-19	VEH SIG SEC (12")LED(YEL ARROW)	EA	8	$450.00	$ 3,600.00
AA1-20	VEH SIG SEC (12")LED(RED)	EA	8	$450.00	$ 3,600.00
AA1-21	VEH SIG SEC (12")LED(RED ARROW)	EA	6	$450.00	$ 2,700.00
AA1-22	PED SIG SEC (LED)(COUNTDOWN)	EA	6	$1,000.00	$ 6,000.00
AA1-23	BACK PLATE (12")(3 SEC)(VENTED) ALUM	EA	6	$250.00	$ 1,500.00

AA1-24	BACK PLATE (12")(4 SEC)(VENTED) ALUM	EA	5	$275.00	$ 1,375.00
AA1-25	TRF SIG CBL (TY A)(14 AWG)(2 CONDR)	LF	654	$3.00	$ 1,962.00
AA1-26	TRF SIG CBL (TY A)(14 AWG)(5 CONDR)	LF	380	$3.50	$ 1,330.00
AA1-27	TRF SIG CBL (TY A)(14 AWG)(7 CONDR)	LF	240	$5.00	$ 1,200.00
AA1-28	TRF SIG CBL (TY A)(14 AWG)(10 CONDR)	LF	199	$7.50	$ 1,492.50
AA1-29	TRF SIG CBL (TY A)(14 AWG)(20 CONDR)	LF	464	$10.00	$ 4,640.00
AA1-30	INS TRF SIG PL AM (S)1 ARM(20')ILSN	EA	1	$2,000.00	$ 2,000.00
AA1-31	INS TRF SIG PL AM (S)1 ARM(50')ILSN	EA	1	$4,000.00	$ 4,000.00
AA1-32	INS TRF SIG PL AM (S)1 ARM(50')LUM&ILSN	EA	1	$4,500.00	$ 4,500.00
AA1-33	INS TRF SIG PL AM (S)1 ARM(55')ILSN	EA	1	$5,000.00	$ 5,000.00
AA1-34	PED POLE ASSEMBLY	EA	1	$3,000.00	$ 3,000.00
AA1-35	PED DETECT PUSH BUTTON (APS)	EA	6	$1,000.00	$ 6,000.00
AA1-36	PED DETECTOR CONTROLLER UNIT	EA	1	$6,000.00	$ 6,000.00
AA1-37	RADAR PRESENCE DETECTOR	EA	4	$1,000.00	$ 4,000.00
AA1-38	RADAR PRESENCE DETECTOR COMM CABLE	LF	564	$2.00	$ 1,128.00
AA1-39	RADAR ADVANCED DETECTION DEVICE	EA	2	$1,000.00	$ 2,000.00
AA1-40	RADAR ADVANCED DETECTOR COMM CABLE	LF	113	$2.00	$ 226.00
AA1-41	REFL PAV MRK TY I (W)4"(BRK)(100MIL)	LF	200	$4.50	$ 900.00
AA1-42	REFL PAV MRK TY I (W)8"(SLD)(100MIL)	LF	270	$4.50	$ 1,215.00
AA1-43	REFL PAV MRK TY I (W)24"(SLD)(100MIL)	LF	416	$22.00	$ 9,152.00
AA1-44	REFL PAV MRK TY I (W)(ARROW)(100MIL)	EA	4	$440.00	$ 1,760.00
AA1-45	REFL PAV MRK TY I (W)(WORD)(100MIL)	EA	2	$550.00	$ 1,100.00
AA1-46	REFL PAV MRK TY I (Y)4"(SLD)(100MIL)	LF	600	$4.50	$ 2,700.00
AA1-47	ELIM EXT PAV MRK & MRKS (4")	LF	800	$4.50	$ 3,600.00
AA1-48	PAV SURF PREP FOR MRK (4")	LF	800	$1.65	$ 1,320.00
AA1-49	PAV SURF PREP FOR MRK (8")	LF	270	$3.30	$ 891.00
AA1-50	PAV SURF PREP FOR MRK (24")	LF	416	$3.30	$ 1,372.80
AA1-51	PAV SURF PREP FOR MRK (ARROW)	EA	4	$165.00	$ 660.00
AA1-52	PAV SURF PREP FOR MRK (WORD)	EA	2	$220.00	$ 440.00
AA1-53	CONC SIDEWALKS (4")	SY	45	$285.00	$ 12,825.00
AA1-54	CURB RAMPS (TY 1)	EA	4	$4,025.00	$ 16,100.00
AA1-55	CONC CURB & GUTTER (TY I)	LF	181	$85.00	$ 15,385.00
AA1-56	EXCAVATION (ROADWAY)	CY	1128	$45.00	$ 50,760.00
AA1-57	COMPACTED SUBGRADE (8")	SY	1628	$4.00	$ 6,512.00

AA1-58	FLEXIBLE BASE (8")	SY	1628	$22.00	$ 35,816.00
AA1-59	PRIME COAT (MC-30 OR AEP)	GAL	376	$10.25	$ 3,854.00
AA1-60	HMAC SURFACE (TY D)(PG70-22)(2")	TON	144	$350.00	$ 50,400.00
AA1-61	HMAC SURFACE (TY C)(PG70-22)(2")	TON	144	$350.00	$ 50,400.00
AA1-62	TACK COAT	GAL	125	$4.50	$ 562.50
AA1-63	DRILL SEEDING	SY	86	$30.00	$ 2,580.00
AA1-64	TOPSOIL (4")	SY	86	$30.00	$ 2,580.00
AA1-65	CONDT (PVC) (SCH 40) (2") (BORE)	LF	450	$35.00	$ 15,750.00
AA1-66	ELEC CONDR (NO. 6) BARE	LF	450	$2.75	$ 1,237.50
AA1-67	ELEC CONDR (NO. 6) INSULATED	LF	900	$3.00	$ 2,700.00
AA1-68	GROUND BOX TY B (122322)W/APRON	EA	4	$2,500.00	$ 10,000.00
AA1-69	ELC SRV TY T 120/240 000(NS)GS(N)SP(O)	EA	1	$8,000.00	$ 8,000.00
AA1-70	ALUMINUM SIGNS (TY A)	SF	9	$50.00	$ 450.00
AA1-71	VEH SIG SEC (12")LED(YEL)	EA	2	$400.00	$ 800.00
AA1-72	TRF SIG CBL (TY A)(14 AWG)(2 CONDR)	LF	20	$3.00	$ 60.00
AA1-73	INSTALL RDSD FLASH BEACON ASSEMBLY	EA	1	$10,000.00	$ 10,000.00
AA1-74	OWNER'S ALLOWANCE (SEE PAY NOTES)	LS	1	$50,000.00	$ 50,000.00
AA1-75	MOBILIZATION	LS	1	$230,000.00	$ 230,000.00
ADDITIVE ALTERNATIVE 1 SUBTOTAL				$	846,660.30

Additive Alternative 2 - Avalon Dr and Deauville Blvd Traffic Signal

ITEM NO.	DESCRIPTION	UNIT	ESTIMATED QUANTITY	UNIT PRICE	TOTAL AMOUNT BID
AA2-1	MOBILIZATION	LS	1	$125,000.00	$ 125,000.00
AA2-2	INSTALLATION OF TRAFFIC SIGNALS (SEE PAY NOTES)	LS	1	$271,272.75	$ 271,272.75
AA2-3	OWNER'S ALLOWANCE (SEE PAY NOTES)	LS	1	$50,000.00	$ 50,000.00
ADDITIVE ALTERNATIVE 2 SUBTOTAL				$	446,272.75

Bid Tabulation:

A.	BASE BID SUBTOTAL	$666,150.75
	ADDITIVE ALTERNATIVE 1 SUBTOTAL	$846,660.30
	ADDITIVE ALTERNATIVE 2 SUBTOTAL	$446,272.75
TOTAL BID AMOUNT		**$1,959,083.80**

THE CITY OF MIDLAND

CONTRACT

23003406

THIS CONTRACT, effective the 28th day of June 2023, by and between the City of Midland, hereinafter referred to as "CITY", and Willis Electric Co., LP, hereinafter referred to as "COMPANY", is made for the following considerations:

1. **Cost:** Total Proposal: $ 1,961,083.80 DOLLARS

2. **Scope of Work:** COMPANY shall perform all work described for traffic signal project. Said work being more particularly described in the following documents, which are attached hereto and incorporated herein for all purposes.

EXHIBIT A..... Specifications, Proposal or Cost Summary
EXHIBIT B.....Intentionally Omitted
EXHIBIT C..... Bonding instructions for Public Works Contract of $50,000 and more
EXHIBIT D..... Wage Scale

3. **City:** The words "CITY's Representative" or "representative" shall mean Jose Ortiz or the designee under whose supervision these contract documents, including the plans and specifications, were prepared, or who may inspect work performed under this Contract; or such other representative, supervisor, or inspector as may be authorized by CITY to act in any particular capacity under this Contract.

4. **City's Representative:** CITY's Representative may make periodic visits to the site to observe the progress and quality of the executed work and to determine, in general, if the work is proceeding in accordance with the contract documents. CITY's representative will not be required to make exhaustive or continuous on-site inspections to check the quality or quantity of the work, nor will such representative be responsible for the construction means, methods, techniques, sequences or procedures, or the safety precautions incident thereto. CITY's representative will not be responsible for COMPANY's failure to perform the work in accordance with the contract.

5. **Company:** Unless otherwise stipulated, COMPANY shall provide and pay for all materials, supplies, machinery, equipment, tools, superintendence, labor, insurance, and all water, light, power, fuel,

transportation and all other facilities necessary for the execution and completion of the work covered by the contract documents. Unless otherwise specified, all materials shall be new, and both workmanship and materials shall be of a good quality. COMPANY shall, if required, furnish satisfactory evidence as to the kind and quality of materials.

5.1. COMPANY shall, at its expense, obtain all permits and licenses necessary for the performance of this contract and pay all fees and taxes required by law, and comply with all laws, ordinances, rules and regulations governing COMPANY's performance of the contract, including all environmental laws and regulations, whether state or federal.

5.2. All work shall be done and all materials furnished in strict conformity with the contract and specifications.

6. **Minor Work Not Mentioned:** All minor detail of the work not specifically mentioned in the Specifications but obviously necessary for the proper completion of the work, such as the proper connection of new work to old, shall be considered as incidental to and a part of the work for which the prices are named in the contract. COMPANY will not be entitled to any additional compensation therefor unless specifically stated otherwise. Otherwise the term "extra work" as used in this contract shall mean and include all work that may be required by CITY to be done by COMPANY to accomplish any alteration or addition to the work as shown on the Specifications.

6.1. COMPANY shall perform all extra work under the direction of CITY's Representative when presented with a written work order signed by CITY's Representative, subject, however, to the right of the COMPANY to require written confirmation of such extra work order by CITY. Payment for extra work shall be as agreed in the work order.

7. **Safety:** COMPANY shall at all times exercise reasonable precaution for the safety of employees and others on or near the work and shall comply with all applicable provisions of federal, state and municipal laws. All machinery and equipment and other physical hazards shall be guarded in accordance with federal, state or municipal laws or regulations.

8. **INDEMNITY: COMPANY SHALL INDEMNIFY AND HOLD HARMLESS AND DEFEND CITY AND ALL OF CITY'S OFFICERS, AGENTS AND EMPLOYEES FROM ALL SUITS, ACTIONS, CLAIMS, DAMAGES, PERSONAL INJURIES, ACCIDENTAL DEATH, LOSSES, PROPERTY DAMAGE AND EXPENSES OF ANY CHARACTER WHATSOEVER, INCLUDING ATTORNEY'S FEES, BROUGHT FOR OR ON ACCOUNT OF ANY INJURIES OR DAMAGES RECEIVED OR SUSTAINED BY ANY PERSON OR PERSONS OR**

PROPERTY, ON ACCOUNT OF ANY NEGLIGENT ACT OF COMPANY, THEIR AGENTS OR EMPLOYEES, OR ANY SUBCONTRACTOR, IN THE EXECUTION, SUPERVISION AND OPERATIONS GROWING OUT OF OR IN ANY WAY CONNECTED WITH THE PERFORMANCE OF THIS CONTRACT, AND COMPANY WILL BE REQUIRED TO PAY ANY JUDGMENT WITH COSTS WHICH MAY BE OBTAINED AGAINST CITY OR ANY OF ITS OFFICERS, AGENTS OR EMPLOYEES, INCLUDING ATTORNEY'S FEES. THE OBLIGATIONS CONTAINED IN THIS SECTION 8 SHALL SURVIVE THE TERMINATION OF THIS CONTRACT.

8.1. **COMPANY SHALL INDEMNIFY AND HOLD HARMLESS AND DEFEND CITY AND ALL OF CITY'S OFFICERS, AGENTS AND EMPLOYEES FROM ALL SUITS, ACTIONS, CLAIMS, DAMAGES, PERSONAL INJURIES, ACCIDENTAL DEATH, PROPERTY DAMAGE, LOSSES, AND EXPENSES OF ANY CHARACTER WHATSOEVER INCLUDING ATTORNEY'S FEES, BROUGHT FOR OR ON ACCOUNT OF ANY INJURIES OR DAMAGES RECEIVED OR SUSTAINED BY ANY PERSON OR PERSONS OR PROPERTY, ON ACCOUNT OF ANY NEGLIGENT ACT OF CITY, CITY'S OFFICERS, AGENTS AND EMPLOYEES, WHETHER SUCH NEGLIGENT ACT WAS THE SOLE PROXIMATE CAUSE OF THE INJURY OR DAMAGE OR A PROXIMATE CAUSE JOINTLY ANDCONCURRENTLY WITH COMPANY OR COMPANY'S EMPLOYEES, AGENTS OR SUBCONTRACTORS NEGLIGENCE IN THE EXECUTION, SUPERVISION ANDOPERATIONS GROWING OUT OF OR IN ANY WAY CONNECTED WITH THE PERFORMANCE OF THIS CONTRACT, AND COMPANY WILL BE REQUIRED TO PAY ANY JUDGMENT WITH COSTS WHICH MAY BE OBTAINED AGAINST CITY OR ANY OF ITS OFFICERS, AGENTS OR EMPLOYEES, INCLUDING ATTORNEY'S FEES. THE OBLIGATIONS CONTAINED IN THIS SECTION 8.1 SHALL SURVIVE THE TERMINATION OF THIS CONTRACT.**

8.2. **COMPANY AGREES THAT IT WILL INDEMNIFY AND SAVE CITY HARMLESS FROM ALL CLAIMS GROWING OUT OF ANY DEMANDS OF SUBCONTRACTORS, LABORERS, WORKMEN, MECHANICS, MATERIALMEN, AND FURNISHERS OF MACHINERY AND PARTS THEREOF, EQUIPMENT, POWER TOOLS AND ALL SUPPLIES, INCURRED IN THE FURTHERANCE OF THE PERFORMANCE OF THIS CONTRACT. WHEN CITY SO DESIRES, COMPANY SHALL FURNISH SATISFACTORY EVIDENCE THAT ALL OBLIGATIONS OF THE NATURE HEREINABOVE DESIGNATED HAVE BEEN PAID, DISCHARGED OR WAIVED. COMPANY, ITS SURETIES AND INSURANCE CARRIERS SHALL DEFEND, INDEMNIFY AND SAVE HARMLESS CITY AND**

ALL OF ITS OFFICERS, AGENTS AND EMPLOYEES FROM ALL SUITS, ACTIONS, OR CLAIMS OF ANY CHARACTER WHATSOEVER, BROUGHT FOR OR ON ACCOUNT OF ANY INJURIES OR DAMAGES RECEIVED OR SUSTAINED BY ANY PERSON OR PERSONS OR PROPERTY, ARISING FROM ANY ACT OF COMPANY OR ANY SUBCONTRACTOR, THEIR AGENTS OR EMPLOYEES, IN THE EXECUTION AND SUPERVISION OF THIS CONTRACT, AND WILL BE REQUIRED TO PAY ANY JUDGMENT WITH COSTS WHICH MAY BE OBTAINED AGAINST CITY OR ANY OF ITS OFFICERS, AGENTS, OR EMPLOYEES INCLUDING ATTORNEY'S FEES. THE OBLIGATIONS CONTAINED IN THIS SECTION 8.2 SHALL SURVIVE THE TERMINATION OF THIS CONTRACT.

9. **Start of Work:** COMPANY shall commence work no later than ten (10) days after receipt of the execution of this document or other written release to proceed and shall complete such work no later than 150 calendar days after release to proceed.

10. **Clean Up:** COMPANY shall promptly remove from CITY's premises all materials condemned by CITY's Representative on account of failure to conform to the contract, whether actually incorporated in the work or not, and COMPANY shall at its own expense promptly replace such condemned materials with other materials conforming to the requirements of the contract. COMPANY shall also bear the expense of restoring all work of other contractors damaged by any such removal or replacement. If COMPANY does not remove and replace any such condemned materials within a reasonable time after a written notice by CITY, CITY may remove and replace such at COMPANY's expense.

11. **Warranty:** Neither the final payment nor any provision in this contract shall relieve COMPANY of responsibility for faulty materials or workmanship, and he shall remedy any defects due thereto and pay for any damage to other work resulting therefrom, which shall appear within a period of one (1) year from the date of substantial completion. CITY shall give notice of observed defects with reasonable promptness.

12. **Remedy:** CITY may, on account of subsequently discovered evidence, withhold whole or part of any payment to such extent as may be necessary to protect itself from loss on account of:

12.1. Defective work not remedied; or

12.2. Claims filed or reasonable evidence indicating possible filing of claims; or

12.3. Failure of COMPANY to make payments promptly to subcontractors or for material or labor which CITY may pay as an agent for the COMPANY; or

12.4. Damages to another contractor or subcontractor.

When the above grounds to withhold payment are removed, or COMPANY provides a surety bond satisfactory to CITY, which will protect CITY in the amount withheld, payment may be released.

13. **Funding Out:** In the event no funds or insufficient funds are appropriated and budgeted or are otherwise unavailable in any fiscal period for contract payments due under the contract, then this contract shall terminate on the last day of the fiscal period for which full appropriations were made, without penalty or expense to CITY of any kind whatsoever.

14. **Wage Scale:** COMPANY agrees to pay all workmen in his employ no less than the generally prevailing wage rate for employees of similar category in the Permian Basin Area, as is depicted in the wage rate scale attached hereto as EXHIBIT D, and incorporated herein by reference for all legal purposes.

14.1. If applicable, the Davis-Bacon Act, 29 CFR 5.5, and any related acts or regulations are hereby incorporated by reference and made a part of this Contract, and all terms and requirements under said laws, by such incorporation, are made terms and requirements of this Contract, to which the parties to this Contract have agreed to be bound.

15. **Prompt Pay Act:** CITY and COMPANY agree that Texas Government Code, Chapter 2251, Payment for Goods and Services (the "Prompt Pay Act") does not waive governmental immunity.

16. **Payment:** After all work is completed by COMPANY, including all Change Orders altering the original scope and amount of said contract are completed, and CITY has inspected and approved that the work is completed and in compliance with the contract and all subsequent Change Orders, CITY shall thereafter issue payment to COMPANY in the amount of the contract and all Change Orders. CITY shall be the final judge of when the work is completed by COMPANY. CITY, in its sole discretion, shall determine if the work under the contract and under any Change Orders has been done to CITY's requirements. CITY may make periodic payments to COMPANY, however such periodic payments may only be made pursuant to this paragraph, and only after all work and all Change Orders are completed by COMPANY and approved by CITY. For contracts exceeding $25,000 and construction time exceeds ninety days, requests for progress payments may be made to the extent of the materials and labor completed at the end of each month. Upon approval by the Owner's Representative the request and invoice shall be forwarded for payment less 5% retainage. The total of these payments shall not exceed 95% of the total contract amount.

17. **No Third-Party Beneficiary:** CITY's approval of this contract does not create a third-party beneficiary. There is no third-party beneficiary to this contract. No person or entity who is not a party to

this contract shall have any third-party beneficiary or other rights hereunder.

18. WAIVER OF ATTORNEY FEES: BY EXECUTING THIS CONTRACT, COMPANY AGREES TO WAIVE AND DOES HEREBY KNOWINGLY, CONCLUSIVELY, VOLUNTARILY AND INTENTIONALLY WAIVE ANY CLAIM IT HAS OR MAY HAVE IN THE FUTURE AGAINST CITY REGARDING THE AWARD OR ATTORNEY'S FEES, WHICH ARE IN ANY WAY RELATED TO THIS CONTRACT, OR THE CONSTRUCTION, INTERPRETATION OR BREACH OF THIS CONTRACT. COMPANY SPECIFICALLY AGREES THAT IF COMPANY BRINGS OR COMMENCES ANY LEGAL ACTION OR PROCEEDING RELATED TO THIS CONTRACT, THE CONSTRUCTION, INTERPRETATION, VALIDITY OR BREACH OF THIS CONTRACT, INCLUDING, BUT NOT LIMITED TO, ANY ACTION PURSUANT TO THE PROVISIONS OF THE TEXAS UNIFORM DECLARATORY JUDGMENTS ACT (TEXAS CIVIL PRACTICE AND REMEDIES CODE SECTION 37.001, ET SEQ., AS AMENDED), OR CHAPTER 271 OF THE TEXAS LOCAL GOVERNMENT CODE, COMPANY AGREES TO ABANDON, WAIVE AND RELINQUISH ANY AND ALL RIGHTS TO THE RECOVERY OF ATTORNEY'S FEES TO WHICH COMPANY MIGHT OTHERWISE BE ENTITLED.

COMPANY AGREES THAT THIS IS THE VOLUNTARY AND INTENTIONAL RELINQUISHMENT AND ABANDONMENT OF A PRESENTLY-EXISTING KNOWN RIGHT. COMPANY ACKNOWLEDGES THAT IT UNDERSTANDS ALL TERMS AND CONDITIONS OF THIS CONTRACT. COMPANY FURTHER ACKNOWLEDGES AND AGREES THAT THERE WAS AND IS NO DISPARITY OF BARGAINING POWER BETWEEN CITY AND COMPANY. THIS SECTION SHALL NOT BE CONSTRUED OR INTERPRETED AS A WAIVER OR GOVERNMENTAL IMMUNITY AND SHALL SURVIVE THE TERMINATION OF THIS CONTRACT.

COMPANY IS RELYING ON ITS OWN JUDGMENT. COMPANY HAD THE OPPORTUNITY TO DISCUSS THIS CONTRACT WITH COMPETENT LEGAL COUNSEL PRIOR TO ITS EXECUTION. THE OBLIGATIONS CONTAINED IN THIS SECTION 18 SHALL SURVIVE THE TERMINATION OF THIS CONTRACT.

19. **Governmental Immunity:** By executing this contract CITY is not waiving its right of governmental immunity. CITY is retaining its immunity from suit. CITY is not granting consent to be sued by legislative resolution or action.

THERE IS NO WAIVER OF GOVERNMENTAL IMMUNITY.

20. **Insurance:**

COMPANY shall at all times during the term of this Contract maintain and keep in full force and effect insurance in the following types and minimum amounts with companies authorized to do business in the State of Texas:

Commercial General Liability (including Contractual liability):	
-Personal Injury:	$1,000,000.00 per person
	$1,000,000.00 per occurrence
-Property Damage:	$500,000.00 per occurrence
Business Automobile Liability:	$250,000.00 combined single limit - Personal Injury and Property Damage
Workers' Compensation:	Statutory limits
Employers' Liability:	$500,000.00 per accident or occurrence

The Commercial General Liability shall be on a per project aggregate, including completed operations, and shall be on a claims-occurred basis. This insurance shall name CITY as an additional insured and waive subrogation in favor of CITY.

The Business Automobile Liability insurance provided by COMPANY shall cover any auto for bodily injury and property damage, including owned vehicles, hired and non-city vehicles, and employee non-ownership, and the amount of such policy shall be a minimum of $250,000.00 covering any vehicle used for the execution of the work that is the subject of this Contract. This insurance shall name CITY as an additional insured and waive subrogation in favor of CITY.

The Workers' Compensation coverage provided by COMPANY shall inure to the benefit of employees injured during the course and scope of their employment by COMPANY pursuant to this Contract. The Workers' Compensation shall waive all rights of subrogation in favor of CITY.

All insurance required pursuant to this Contract shall provide for a waiver of subrogation in favor of CITY. All insurance required pursuant to this Contract, except for Workers' Compensation Insurance, shall name CITY as an additional insured on a claims occurred basis. CITY shall be provided the notice by COMPANY's insurance provider not later than thirty (30) days prior to any reduction or termination of such coverage.

COMPANY shall contractually require all contractors, subcontractors, and sub-subcontractors that work on any portion of the work that is the subject of this Contract to obtain insurance coverage that meets or exceeds the policy requirements and minimum amounts specified herein. All contractors, subcontractors, and sub-subcontractors shall obtain insurance policies that provide blanket waivers of subrogation in favor of the City of Midland and policies that name the City of Midland as an additional insured on a claims occurred basis (except workers' compensation).

The parties agree that, prior to the execution of the Contract, COMPANY shall provide one or more certificates of insurance specifically stating that these requirements have been met and subject to the approval of CITY. CITY shall not be required to provide any insurance whatsoever pursuant to this Contract.

COMPANY certifies that the certificate of insurance provided as required herein complies with the requirements of Chapter 1811 of the Texas Insurance Code. COMPANY shall not use an unapproved certificate of insurance or insert inappropriate language on a certificate. Compliance with state law is the sole responsibility of COMPANY.

21. **Assignment**: COMPANY shall not, either directly or indirectly, assign all or any part of this Contract or any interest, right or privilege herein, without the prior written consent of CITY. The issue on whether or not to grant consent to an assignment is in the sole discretion of CITY.

22. **RELEASE: NOTWITHSTANDING ANY OTHER PROVISION CONTAINED HEREIN, COMPANY HEREBY RELEASES, ACQUITS, RELINQUISHES AND FOREVER DISCHARGES CITY AND CITY'S COUNCIL MEMBERS, EMPLOYEES, AND OFFICERS FROM ANY AND ALL DEMANDS, CLAIMS, DAMAGES OR CAUSES OF ACTION OF ANY KIND WHATSOEVER THAT COMPANY HAS OR MIGHT HAVE IN THE FUTURE, INCLUDING, BUT NOT LIMITED TO, BREACH OF CONTRACT, QUANTUM MERUIT, CLAIMS UNDER THE DUE PROCESS AND TAKINGS CLAUSES OF THE TEXAS AND UNITED STATES CONSTITUTIONS, TORT CLAIMS, OR CITY'S NEGLIGENCE. THE OBLIGATIONS CONTAINED IN THIS SECTION SHALL SURVIVE THE TERMINATION OF THIS CONTRACT**.

23. **Governing Law and Venue:** This contract shall be governed by the laws of the State of Texas. All performance and payment made pursuant to this contract shall be deemed to have occurred in Midland County, Texas. The obligations and undertakings of each of the parties to this Agreement shall be deemed to have occurred in Midland County, Texas. Exclusive venue for any claims, suits or any other action arising from or connected in any way to this contract or the performance of this contract shall be in Midland County, Texas.

24. **Independent Contractor:** COMPANY shall perform all work and services described herein as an independent contractor and not as an officer, agent, servant, or employee of CITY. COMPANY shall have exclusive control of, and the exclusive right to control the details of the services and work to be performed hereunder, and all persons performing the same. COMPANY shall be solely responsible for the acts and omissions of its officers, agents, employees, contractors and subcontractors and the doctrine

of respondeat superior shall not apply as between CITY and COMPANY, its officers, agents, employees, contractors and subcontractors. Nothing in this Contract shall be construed as creating a partnership or joint enterprise between CITY and COMPANY. No person performing any of the work and services described hereunder by COMPANY shall be considered an officer, agent, servant or employee of CITY. Further, it is specifically understood and agreed that nothing in this contract is intended or construed as creating a "Community of Pecuniary Interest" or an "Equal Right of Control" which would give rise to vicarious liability.

COMPANY shall be an independent contractor under this Contract and shall assume all of the rights, obligations and liabilities, applicable to it as such independent contractor hereunder. CITY does not have the power to direct the order in which the work is done. CITY shall not have the right to control the means, methods or details of COMPANY's work. COMPANY shall assume exclusive responsibility for the work. COMPANY is entirely free to do the work in its own way.

25. **Notice of Alleged Breach; Statutory Prerequisites:** As a condition precedent to filing suit for alleged damages incurred by an alleged breach of an express or implied provision of this Contract, COMPANY or its legal representative, shall give the City Manager, or any other reasonable official of CITY, notice in writing (consisting of one (1) original and seven (7) copies of notice attached to a copy of this Contract) of such damages, duly verified, within one hundred twenty (120) days after the same has been sustained. The discovery rule does not apply to the giving of this notice. The notice shall include when, where and how the damages occurred, the apparent extent thereof, the amount of damages sustained, the amount for which COMPANY shall settle, the physical and mailing addresses of COMPANY at the time and date the claim was presented and the physical and mailing addresses of COMPANY for the six (6) months immediately preceding the occurrence of such damages, and the names and addresses of the witnesses upon whom COMPANY relies to establish its claim; and a failure to provide such written notification within the time and manner provided herein shall exonerate, excuse and except CITY from any liability whatsoever. CITY is under no obligation to provide notice to COMPANY that COMPANY's notice is insufficient. CITY reserves the right to request additional information regarding the claim. Said additional information shall be supplied within thirty (30) days after receipt of notice.

The statutory prerequisites outlined herein constitute jurisdictional requirements pursuant to Section 271.154 of the Texas Local Government Code and Section 311.034 of the Texas Government Code. Notwithstanding any other provision to the contrary, COMPANY's failure to comply with the requirements of this Section shall perpetually bar COMPANY's claim for damages under Chapter 271 of the Texas Local Government Code, and Section 311.034 of the Texas Government Code, regardless if

CITY has actual or constructive notice or knowledge of said claim or alleged damages. COMPANY agrees that the requirements of this entire Contract are reasonable. The provisions and obligations of this Section shall survive the termination of this Contract.

26. **Consideration:** The terms of this Contract are supported by good and valuable consideration, the receipt and sufficiency of which is hereby acknowledged by the parties named herein.

27. **Termination At Will:** CITY may terminate this Contract at will for no or any reason upon giving at least one hundred eighty (180) days written notice to COMPANY. The parties to this Contract understand and agree that it is in CITY's sole discretion to cancel the Contract during the term of the Contract without penalty to CITY. COMPANY has no expectation and has received no guarantees that this Contract will not be terminated before the end of the Contract term. The parties have bargained for the flexibility of terminating this Contract upon tender of the requisite notice at any time during the term of the Contract. All work and services under the Contract shall be suspended upon termination of the Contract becoming effective.

28. **Compliance:** COMPANY agrees that it shall comply with Texas Government Code Section 2252.908, *et seq.*, as amended. COMPANY agrees that it shall comply with Texas Local Government Code Section 176.006, *et seq.*, as amended.

29. To the extent that Sections 2271.002 and 2274.002 of the Texas Government Code (collectively, the "Anti-Boycott Statutes") apply to this Contract, Company hereby verifies:

- that Company does not boycott Israel and will not boycott Israel during the term of this Contract;
- that Company does not boycott energy companies and will not boycott energy companies during the term of this Contract; and
- that Company does not have a practice, policy, guidance, or directive that discriminates against a firearm entity or firearm trade association and will not discriminate during the term of this Contract against a firearm entity or firearm trade association.

To the extent that the Anti-Boycott Statutes do not apply to this Contract, such verification is not required, and Company shall be deemed to have not made such verification.

30. **Records Retention and Production of Information.** To the extent that this Contract constitutes a contract described by Section 552.371 of the Texas Government Code, COMPANY shall: (i) preserve all contracting information related to this Contract as provided by the records retention requirements applicable to CITY for the duration of this Contract; (ii) promptly provide to CITY any contracting information related to the Contract that is in the custody or possession of COMPANY on request of CITY;

and (iii) on completion of the Contract, either: (a) provide at no cost to CITY all contracting information related to the Contract that is in the custody or possession of COMPANY; or (b) preserve the contracting information related to the Contract as provided by the records retention requirements applicable to CITY.

31. **Public Information.** To the extent that this Contract is a contract described by Section 552.371 of the Texas Government Code, COMPANY agrees as follows in accordance with Section 552.372(b) of the Texas Government Code: The requirements of Subchapter J, Chapter 552, Government Code, may apply to this Contract, and COMPANY agrees that the contract can be terminated if COMPANY knowingly or intentionally fails to comply with a requirement of that subchapter.

32. **Conflict of Terms.** If a conflict of terms or language exists between: (i) any of the provisions of this Contract and (ii) any of the provisions contained in any exhibit(s) attached to this Contract, precedence shall be given to the provisions of this Contract. For the avoidance of any doubt, the provisions contained in this Contract shall supersede any and all conflicting provisions contained in any exhibit(s) attached hereto. Furthermore, the parties acknowledge and agree that any provision contained in an exhibit(s) attached to this Contract that imposes an additional express or implied obligation on CITY is hereby made void and of no force or effect. CITY's sole and exclusive obligations under this Contract are contained in the provisions of this Contract that precede the signature page(s), which evidences the parties' execution.

33. Company agrees that all iron or steel products produced through a manufacturing process and used in the project that is the subject of this Contract shall be produced in the United States in accordance with Government Code § 2252.202, et seq., as amended.

EXECUTED IN DUPLICATE the day and year first above mentioned.

THE CITY OF MIDLAND, TEXAS

By: _____
Morris Williams Jr., Interim City Manager

ATTEST

_____
Marcia Bentley-German, City Governance Officer/City Secretary

APPROVED ONLY AS TO FORM

_____
John Ohnemiller, City Attorney

COMPANY:

By: _____

Name: _____

Title: _____

STATE OF _____ §
§
COUNTY OF_____ §

BEFORE ME, the undersigned authority, on this ____ day of _____, 2023 personally appeared, _____, an officer of Willis Electric Co., LP, known to me to be the person and official whose name is subscribed to the forgoing instrument, and acknowledged to me that he executed the same as the act and deed of said corporation, for the purposes and consideration therein expressed, and in the capacity therein stated.

GIVEN UNDER MY HAND AND SEAL OF OFFICE this the ____day of _____, 2023.

_____
Notary Public, State of _____

CITY OF MIDLAND

PURCHASING DIVISION DATE: 4/26/2023

BID REQUEST PAGE: 1

(THIS IS NOT AN ORDER) **BID NO: 23003406**

OPENING TIME: 2:00 PM **CLOSING DATE: 6/14/2023**

CITY OF MIDLAND
300 NORTH LORAINE
P. O. BOX 1152
MIDLAND, TX 79702

BIDS WILL BE RECEIVED IN THE OFFICE OF THE Office of the City Secretary, Suite 330, Midland, TX UNTIL 2:00 P.M. 6/14/2023 FOR GOODS AND SERVICES DESCRIBED BELOW WHICH WILL BE DELIVERED TO:

Various locations, Midland, TX

ITEM NO.	QTY	UNIT	DESCRIPTION	UNIT PRICE	AMOUNT
	1	LS	Labor, material, equipment, and supervision necessary for the T23-03 Traffic Signal Projects in accordance with the attached specifications and contract.	1,961,083.80	1,961,083.80
				TOTAL	

NOTICE TO BIDDERS:

1. FAILURE TO RESPOND WITH EITHER A BID OR "NO BID" WILL SUBJECT YOUR FIRM TO REMOVAL FROM THE BID LIST FOR THIS TYPE OF MATERIAL, EQUIPMENT OR SUPPLY ITEM.
2. BIDS SHALL BE DELIVERED TO THE CITY IN A SEALED PACKAGE (ENVELOPE, ETC) **UNLESS THE CITY STATES** THAT THE BID MAY BE FAXED OR E-MAILED, OTHERWISE, BIDS FAXED OR E-MAILED DIRECTLY TO THE CITY WILL BE REJECTED. A SEALED BID MAY BE FAXED TO A THIRD PARTY FOR SEALED DELIVERY TO THE CITY. PLEASE CALL FOR MORE INFORMATION.
3. IF THIS PURCHASE REQUIRES A CONTRACT, THE ATTACHED CONTRACT AND INSURANCE REQUIREMENTS ARE **NON-NEGOTIABLE**. MODIFICATIONS BY BIDDER/CONTRACTOR OF ANY MATERIAL TERM(S) TO THE CONTRACT DOCUMENTS WILL BE DEEMED A NON-RESPONSIVE BID. NON-RESPONSIVE BIDS WILL BE REJECTED. BIDDER/CONTRACTOR MUST BE WILLING TO SIGN THE CONTRACT AS IS AND WITHOUT MODIFICATIONS, PROVIDE PROPERLY EXECUTED BONDS (IF APPLICABLE) AND PROVIDE INSURANCE SPECIFICALLY AS REQUIRED WITHIN THE CONTRACT DOCUMENTS **WITHIN 21 DAYS** OF THE DATE OF THE TRANSMITTAL LETTER.
4. IF THE SELECTED BIDDER/CONTRACTOR CANNOT MEET THE REQUIREMENTS OF PARAGRAPH 3, THEN THE CITY RESERVES THE RIGHT TO AWARD THIS PURCHASE TO ANOTHER BIDDER.
5. **IMPORTANT NOTICE** – IF THE CONTRACT DOCUMENTS REQUIRE WORKER'S COMPENSATION INSURANCE, BIDDER/CONTRACTOR MUST CARRY WORKER'S COMPENSATION INSURANCE TO BE ELIGIBLE FOR THIS CONTRACT. IF YOU CANNOT PROVIDE WORKER'S COMPENSATION INSURANCE AS REQUIRED BY STATE OF TEXAS STATUTE WE RESPECTFULLY REQUEST THAT YOU "NO BID" THIS WORK.

FOR ADDITIONAL INFORMATION, CONTACT (432) 685-7234 OR 685-7233. FAX NO. (432) 685-0523

NOTE: EACH BIDDER IS TO INDICATE BRAND NAME PRODUCT NUMBER AND ATTACH DESCRIPTIVE LITERATURE CLEARLY MARKED TO SHOW EACH ITEM ON THIS BID.

THE UNDERSIGNED HEREBY OFFERS TO FURNISH AND DELIVER THE ARTICLES OR SERVICE AS SPECIFIED ABOVE AT THE PRICES AND TERMS HEREIN STATED AND IN STRICT ACCORDANCE WITH THE SPECIFICATIONS AND CONDITIONS OF BIDDING ALL WHICH ARE MADE A PART OF THIS OFFER. THIS OFFER IS NOT SUBJECT TO WITHDRAWAL WITHOUT PERMISSION.

COMPANY NAME: Willis Electric Co LP
ADDRESS Box 7109
CITY Abilene ST TX ZIP 79608
PHONE NO. 325-698-3444 FAX NO. 325-698-3446
EMAIL: Tommy@WillisLP.com

CASH DISCOUNT: _____ % _____ DAYS

DELIVERY CAN BE MADE _____

AUTHORIZED SIGNATURE _____

PLEASE READ CONDITIONS FOR BIDDING ON BACK BEFORE SUBMITTING

MIDLAND
Purchasing Division

On-line responses will not be allowed for this solicitation.

Delivery of Submittals: Bid packets must be received in the City Secretary's Office no later than designated bid date and time. Bidders are responsible for the means of timely delivering the bid packet. Delays due to any instrumentality used to transmit the bid packet (e.g., delay occasioned by a bidder, City's internal mailing system, etc.) are the sole responsibility of the bidder. **Late bid packets will not be accepted under any circumstances.**

Please print these documents and submit your bid in a sealed envelope to:

Mailing Address:

The City Secretary's Office
City of Midland
P. O. Box 1152
Midland, TX 79702

OR

Physical Address:

The City Secretary's Office
City of Midland
300 N. Loraine, Suite 330
Midland, TX 79701

ATTENTION: The deadline for submitting additional questions is 72 working hours before the bid opening date. Questions submitted before the Noon deadline will be included in the Addendum. Questions submitted after the Noon deadline will not receive any additional information and will instead only be directed to the information already provided.

SPECIAL PROVISIONS

1. SCOPE OF WORK:

The work to be accomplished under this Contract includes installations of new Traffic Signals within the corporate limits of the City of Midland.

Project consists of one base bid and two independent additive alternatives:

- **Base Bid - Big Spring St and Lonestar Traffic Signal.**

  The work generally includes the installation of a new traffic signal at the intersection. Incidental to the installation of new traffic signal equipment is the removal and replacement of a driveway and the installation of pedestrian ramps.

- **Additive Alternatives 1- Andrews HWY and Woodcrest Traffic Signal.**

  The work generally includes the installation of a new traffic signal at the intersection. Incidental to the installation of new traffic signal equipment is the removal of existing curb and sidewalk and the construction of new curb and pedestrian ramps.

- **Additive Alternatives 2 - Avalon Dr and Deauville Blvd Traffic Signal**
  The work generally includes the installation of a new traffic signal at the intersection. Incidental to the installation of new traffic signal equipment is the removal of existing curb and sidewalk and the construction of new curb and pedestrian ramps.

The city will furnish to the Contractor all poles and posts, including anchor bolts, as well as the cabinet, controller, battery backup system, MMU2-LEIp, Conflict Monitor, Flashing Yellow Arrow Signs, PTZ Camera, Radar Detectors, Opticom Systems, and ILSN signs, regardless of what is shown on the plans.

The Contractor will be responsible to coordinate pick up of all City-supplied items at the City of Midland Traffic Signal Shop at 1602 E. Orchard Ln, Midland, Texas, once notified of their availability. Notice to Proceed will be issued only once the City receives the signal poles and they are available for the Contractor to pick up.

The location and details for the construction and related work are shown upon the drawings included with this Request for Bids. These drawings and plans, together with the specifications, form a part of the Contract. Where figures are shown on the drawings, they shall take precedence over scaled distances and dimensions.

2. CONTRACT DEADLINE:

The deadline for substantial completion of the entire project is **365 calendar days** starting from the Notice to Proceed date.

Notice to Proceed for **Additive Alternatives 1 and 2** will be issued only once the City receives the signal poles and they are available for the Contractor to pick up.

Extensions of the project deadline may be requested by the Contractor for documented conditions such as weather days, delays due to conflicts with existing franchise utility lines, etc. which are reasonably beyond the

Contractor's control. Any deadline extensions must be submitted by the Contractor in writing to the Traffic Engineer for review, and the approval or denial of the request rests solely with the Traffic Engineer.

Unless specifically granted in writing by the Engineer, there will be no suspension of project time between phases of construction.

3. ORDER OF PRECEDENCE:

The Special Provisions take precedence over the General Conditions in this bid packet anywhere these two sections are not in agreement.

Any changes or revisions made as part of an Addendum for this project take precedence over the original bid packet and construction drawing set where the documents are in conflict.

In the construction drawing set any written or noted dimension takes precedence over dimensions measured based on the drawing scale unless otherwise directed by the Engineer.

The Contractor is to bid the quantities in the Proposal section of the bid packet even if there is a discrepancy between the Proposal quantities and those noted or measured in the construction drawing set.

4. EXAMINATION OF SITE:

Prospective bidders shall make a careful examination of the entire site of the project and shall make such explorations as may be necessary to determine the subsoil and/or water conditions to be encountered; improvements and obstructions which may be encountered; methods of providing ingress-egress to private as well as public property; methods of handling traffic during construction and maintenance of the entire project as well as any section thereof, protection of all existing structures both above and below ground; and how the plans fit the proposed project and especially if any discrepancies exist.

5. PAYMENT:

Payment and retainage (five percent, 5%) shall be per the General Conditions.

Payment will be made for material installed and complete in place, not for material delivery or materials on hand.

6. TRAFFIC CONTROL:

All proposed traffic control shall be approved by the City where applicable. All traffic control plans must be submitted to and approved by the Traffic Operations Division no less than two (2) business days prior to starting the construction work. Traffic control for each phase of work must be approved prior to starting that work.

Generic traffic control plans or typical details may be submitted for shoulder work on any class of roadway, or for work on local or collector streets that does not require the closure of any travel lanes (i.e., all lanes are open to traffic on striped roadways, or adequate width remains available for two-way traffic on unstriped roadways).

Once a generic traffic control plan or typical detail for a certain type of setup has been approved one time, the Contractor shall only be responsible for notifying the Traffic Operations Division of the location, type of setup, and dates on which they intend to utilize the pre-approved traffic control for the duration of the contract. No

additional plan submittals will be required in these cases, except that the City reserves the right to suspend this exception at its discretion.

For any work not fitting the above exception, or in the event that the exception is suspended by the City, a site-specific traffic control plan will be required for each work location and time period.

1. All temporary traffic control shall be in general conformance with the *Texas Manual on Uniform Traffic Control Devices* (TMUTCD) (latest edition as adopted by the Texas Department of Transportation), except as specifically directed by the City Engineer or City Traffic Engineer.
2. All temporary traffic control shall be designed, installed, and maintained by competent and qualified personnel with adequate experience in traffic control.
3. All temporary traffic control involving multiple lane closures or traffic shifts, full closures of collector or arterial streets, traffic control extending through a railroad crossing, or any setup reasonably determined by the City to be "complex", shall be implemented only by a contractor with specific experience and expertise in the field of traffic control (i.e., a qualified "barricade company").
4. A Traffic Control Plan (TCP) shall be submitted to the Engineering Services Department, Traffic Operations Division, in advance of any work in the right-of-way that impacts traffic. No work shall occur until an approved TCP has been returned to the Contractor.
5. A copy of the approved TCP shall be kept in the possession of the person responsible for supervising the traffic control at all times while working in the right-of-way. The approved TCP shall be presented to City staff or law enforcement upon demand at any time.
6. Depending on site conditions and the nature of the work, temporary traffic control may be approved by the City for either of the following:
    a. All Times – All traffic control, including closures, may remain in place 24 hours per day until expiration of the approved TCP.
    b. Off-Peak Only – Lane or road closures are NOT permitted from 6:00-9:00 AM and 4:00-7:00 PM on weekdays (Monday through Friday). Other traffic control not related to lane or road closures may remain in place 24 hours per day until expiration of the approved TCP.
7. The contractor setting the temporary traffic control shall be responsible for the maintenance and upkeep of all signs, barricades, and other devices, at all times.
    a. All temporary traffic control setups shall be maintained at least one time per day, including weekends and holidays.
    b. More frequent maintenance shall be performed as needed, with particular emphasis to following up after severe weather events or during times of high winds.
    c. Maintenance shall include:
        i. Verifying and correcting the location and orientation of all signs, barricades, and other devices;
        ii. Keeping signs and reflective areas of barricades and other devices clean and free of dirt buildup so as to maintain appropriate visibility and legibility; and
        iii. Ensuring the proper location, orientation, and operation of arrow boards or message boards, if present.
8. Arrow boards shall be required for lane closures under the following conditions:
    a. On roadways with a posted speed limit of 55 MPH or greater, for closures lasting more than one (1) hour;
    b. On roadways with a posted speed limit of 45 MPH or greater, for closures lasting more than four (4) hours;
    c. On any roadway if lanes will remain open to traffic travelling in the same direction on both sides of a closed lane during any overnight hours (from 7:00 PM to 6:00 AM); and
    d. At other times as shown on the approved TCP, or as otherwise directed by the City.

7. DETOURS:

The Contractor shall prosecute his work in such a manner as to create a minimum of interruption to traffic and pedestrian facilities and to the flow of vehicular and pedestrian traffic within the project area.

8. PROPERTY AND RIGHT-OF-WAY ACCESS:

Access to adjacent property shall be maintained at all times unless otherwise directed by the Traffic Engineer. If the contractor will not be working in an area for a period of one week or more, special care should be taken to address any unsafe conditions such as excavated areas or obstructions outside the worked area that could be tripping hazards, etc.

9. CONSTRUCTION MATERIALS:

The Contractor is to only provide new materials for permanent installation in all parts of this project, and all such materials must comply with the General Conditions, the Bid Packet Specifications, and all applicable City of Midland Standards and Specifications.

Concrete is only to be placed when the ambient temperature is between 40 degrees and 95 degrees Fahrenheit and the ambient temperature in the shade is higher than 40 degrees Fahrenheit or is 40 degrees Fahrenheit and rising.

No construction materials are to be placed or installed during rain events unless they are necessary to resolve an emergency situation or to facilitate the project site erosion control measures.

10. EROSION CONTROL:

Erosion control is the responsibility of the Contractor and erosion control measures are to be implemented so as to prevent sediment erosion from wind, rain, and other elements from the project site. Should the Engineer determine that supplementary erosion control measures are required in addition to those implemented by the Contractor then the Contractor will include additional erosion control measures within reason to the Owner's satisfaction and/or TCEQ requirements.

Reasonable erosion control measures include but are not limited to: construction entrance(s), concrete washout(s), perimeter silt fence or fiber wattle, rock rip-rap dams for concentrated runoff control, gutter and inlet protection measures such as sand bags, and stabilization of the construction area surfaces when construction work is not actively occurring by means of vegetative cover or seeded erosion control blankets.

Supplemental erosion control measures are ancillary to the project and not paid as a separate item, unless otherwise noted in the Proposal or Pay Notes.

Site cleanup work is to be done for this project as soon as possible as per the General Conditions and will be ancillary to the project and not paid as a separate item, unless otherwise noted in the Proposal or Pay Notes. Site cleanup is to take place throughout the project's construction as needed to maintain a clean and professional looking work area. No more than three calendar days are to elapse after completion of construction before the final roadway and right-of-way cleanup has been completed to the satisfaction of the Engineer.

11. WASTE MATERIAL:

Excess material from excavation and other construction or demolition activity will become the property of the Contractor. Excess excavation will be disposed of at locations secured by the Contractor and if necessary, approved by the Engineer. No material is to be placed on private property or City property without the approval of the Engineer and the property owner. Removal of excess material, excavation, and waste material are ancillary to the project and not paid as a separate item, unless otherwise noted in the Proposal or Pay Notes.

Excess concrete material must be washed out in a concrete washout within the project's job site area, or else any and all other concrete material washout must occur away from the job site area in the Contractor's or concrete Supplier's own operation yards or properties. Under no circumstances are concrete trucks allowed to washout in any job site excavations, channels, public right-of-way, or on private property.

12. TESTING

It is the Contractor's responsibility to perform all required testing for any and all materials and workmanship performed or installed as part of the project's work. The cost of all such testing shall be borne solely by the Contractor unless required by the Engineer for work or materials that had previously been tested and approved and had not experienced any change in condition since that time as a result of the Contractor's work or actions; or unless additional testing outside of the project scope is performed at the request of the Engineer.

Required testing includes:

Concrete Pavement – A Slump Test is required for every cylinder set (3 test cylinders), and no less than 1 cylinder set per day when concrete is placed. Test results are to be given to the engineer upon completion of each test, with 1 cylinder set for:

A. Every 50 cubic yards of concrete placed for concrete pavement between street intersections.

B. Every 50 cubic yards of concrete placed for concrete pavement at a street intersection.

C. Every 2 sets of fillets and valley gutters at street approaches. (1 set = 2 fillets and 1 valley gutter)

D. Every 4 alley approaches or driveway approaches.

E. There will be no testing for curb, ramps, and sidewalks.

Concrete Pavement for Trench Repair – A Slump Test is required only if directed by the Engineer for pavement patches that are equal to or greater than 50 cubic yards (roughly equal to an 8' wide by 340' long by 6" thick pavement section). The slump test is to be performed once for every cylinder set (3 cylinders), and no less than 1 cylinder set per day when concrete is placed. Test results are to be given to the engineer upon completion of each test. There will be no testing for curb, ramps, and sidewalks.

Asphalt Hot-Mix Pavement – A Nuclear Gauge Density Test is required for either each day that asphalt hot-mix is placed or for every 250 linear feet of asphalt hot-mix pass, whichever results in more frequent testing. The laboratory density limits will be a minimum limit of 96%, a maximum limit of 98%, and an optimum limit of 97%. The acceptable field density range for construction of this project is 93% - 98% with a target density of 95%. Test results are to be given to the Engineer upon completion of each test.

Asphalt Hot-Mix Pavement for Trench Repair – A Nuclear Gauge Density Test is required only if directed by the Engineer for pavement patches that are equal to or greater than 620 square yards (roughly equal to an 8' wide by 700' long pavement section). The laboratory density limits will be a minimum limit of 96%, a maximum limit of 98%, and an optimum limit of 97%. The acceptable field density limit will be a minimum limit of 93%, a maximum limit of 98%, and an optimum limit of 95%. Test results are to be given to the Engineer upon completion of each test.

13. COMPLIANCE:

It is the responsibility of the Contractor to comply with all applicable provisions of the laws and building and construction codes of the City of Midland and the State of Texas, and with any regulations for the protection of workers which may be promulgated by the Government, and shall protect such work with all necessary lights, barriers, safeguards, and warnings as provided for in said specifications and the Ordinance regulations.

It is the responsibility of the Contractor to comply at all times with Occupational Safety and Health Administration (OSHA) and all other applicable safety regulations and requirements throughout the course of the project's work.

14. PERSONNEL:

It is the Contractor's responsibility to have a supervising representative of the Contractor on the construction site any time that construction work is taking place. The Contractor's representative must be on the Contractor's direct payroll. Sub-contractors or paid consultants will not satisfy this requirement.

It is also the Contractor's responsibility to provide the City with a reliable contact for issue escalation coordination. Such contacts would include the Contractor's site foreman, the Contractor's construction project manager, etc.

15. WARRANTY PERIOD:

There is a one (1) year calendar warranty period on this project for all work performed or materials installed effective immediately upon acceptance of the improvements by the Owner. The warranty period will be based on the acceptance date of the project as a whole, and not any individual phases of the project.

Base Bid - Big Spring St and Lonestar Traffic Signal					
ITEM NO.	DESCRIPTION	UNIT	ESTIMATED QUANTITY	UNIT PRICE	TOTAL AMOUNT BID
BB1	REMOVING CONC (CURB AND GUTTER)	LF	122	$ 17.25	$ 2,104.50
BB2	REMOV STAB BASE AND ASPH PAV (0"-12")	SY	271	$ 25.50	$ 6,910.50
BB3	FL BS (CMP IN PLACE)(TY A GR 1-2)(8")	SY	202	$ 51.00	$ 10,302.00
BB4	DRILL SHAFT (TRF SIG POLE) (36 IN)	LF	26	$ 650.00	$ 16,900.00
BB5	DRILL SHAFT (TRF SIG POLE) (48 IN)	LF	50	$ 950.00	$ 47,500.00
BB6	MOBILIZATION	LS	1	$ 225,000.00	$ 225,000.00
BB7	BARRICADES, SIGNS AND TRAFFIC HANDLING	MO	2	$ 1,300.00	$ 2,600.00
BB8	CONC CURB & GUTTER (TY A)	LF	115	$ 72.00	$ 8,280.00
BB9	INTRSCT, DRVWAYS, & TURNOUT (CONC)	SY	145	$ 255.00	$ 36,975.00
BB10	CONC SIDEWALKS (6")	SY	19	$ 375.00	$ 7,125.00
BB11	CURB RAMPS (TY 7)	EA	2	$ 5,750.00	$ 11,500.00
BB12	WIRE FENCE (TY A)	LF	140	$ 92.00	$ 12,880.00
BB13	GATE (TY 1)	EA	2	$ 2,600.00	$ 5,200.00
BB14	CONDT (PVC) (SCH 40) (2")	LF	135	$ 20.00	$ 2,700.00
BB15	CONDT (PVC) (SCH 40) (3")	LF	80	$ 30.00	$ 2,400.00
BB16	CONDT (PVC) (SCH 40) (4")	LF	20	$ 40.00	$ 800.00
BB17	CONDT (PVC) (SCH 40) (4") (BORE)	LF	400	$ 65.00	$ 26,000.00
BB18	CONDT (PVC) (SCH 80) (2")	LF	10	$ 30.00	$ 300.00
BB19	ELEC CONDR (NO.12) INSULATED	LF	170	$ 2.00	$ 340.00
BB20	ELEC CONDR (NO.8) INSULATED	LF	630	$ 2.50	$ 1,575.00
BB21	ELEC CONDR (NO.6) BARE	LF	605	$ 2.75	$ 1,663.75
BB22	ELEC CONDR (NO.6) INSULATED	LF	210	$ 3.00	$ 630.00
BB23	GROUND BOX TY C (162911)W/APRON	EA	5	$ 3,000.00	$ 15,000.00
BB24	ELC SRV TY D 120/240 070(NS)SS(E)SP(U)	EA	1	$ 12,500.00	$ 12,500.00
BB25	IN SM RD SN SUP&AM TYS80(1)SA(U)	EA	3	$ 2,000.00	$ 6,000.00
BB26	REMOVE SM RD SN SUP&AM	EA	1	$ 250.00	$ 250.00
BB27	REFL PAV MRK TY I (W)8"(SLD)(100MIL)	LF	170	$ 8.50	$ 1,445.00
BB28	REFL PAV MRK TY I (W)12"(SLD)(090MIL)	LF	258	$ 11.00	$ 2,838.00
BB29	REFL PAV MRK TY I (W)24"(SLD)(090MIL)	LF	122	$ 22.00	$ 2,684.00
BB30	PAVEMENT SEALER 8"	LF	170	$ 2.50	$ 425.00
BB31	PAVEMENT SEALER 12"	LF	258	$ 5.00	$ 1,290.00
BB32	PAVEMENT SEALER 24"	LF	122	$ 7.00	$ 854.00
BB33	PAVEMENT SEALER (ARROW)	EA	4	$ 165.00	$ 660.00
BB34	PAVEMENT SEALER (WORD)	EA	2	$ 220.00	$ 440.00
BB35	PREFAB PAV MRK TY C (W) (ARROW)	EA	4	$ 440.00	$ 1,760.00
BB36	PREFAB PAV MRK TY C (W) (WORD)	EA	2	$ 550.00	$ 1,100.00
BB37	ELIM EXT PAV MRK & MRKS (4")	LF	520	$ 5.50	$ 2,860.00
BB38	ELIM EXT PAV MRK & MRKS (24")	LF	12	$ 27.50	$ 330.00
BB39	PAV SURF PREP FOR MRK (8")	LF	170	$ 2.50	$ 425.00
BB40	PAV SURF PREP FOR MRK (12")	LF	258	$ 5.00	$ 1,290.00
BB41	PAV SURF PREP FOR MRK (24")	LF	122	$ 7.00	$ 854.00
BB42	PAV SURF PREP FOR MRK (ARROW)	EA	4	$ 165.00	$ 660.00
BB43	PAV SURF PREP FOR MRK (WORD)	EA	2	$ 220.00	$ 440.00
BB44	PAV SURF PREP FOR MRK (RPM)	EA	22	$ 27.50	$ 605.00
BB45	INS HY TRF SIG (DPT SUP CNT & CAB)(ISO)	EA	1	$ 30,000.00	$ 30,000.00
BB46	VEH SIG SEC (12")LED(GRN)	EA	12	$ 450.00	$ 5,400.00
BB47	VEH SIG SEC (12")LED(GRN ARW)	EA	2	$ 450.00	$ 900.00
BB48	VEH SIG SEC (12")LED(YEL)	EA	12	$ 450.00	$ 5,400.00
BB49	VEH SIG SEC (12")LED(YEL ARW)	EA	4	$ 450.00	$ 1,800.00
BB50	VEH SIG SEC (12")LED(RED)	EA	12	$ 450.00	$ 5,400.00
BB51	VEH SIG SEC (12")LED(RED ARW)	EA	4	$ 450.00	$ 1,800.00
BB52	PED SIG SEC (LED)(COUNTDOWN)	EA	4	$ 1,000.00	$ 4,000.00
BB53	BACKPLATE W/REFL BRDR(3 SEC)ALUM	EA	12	$ 250.00	$ 3,000.00

BB54	BACKPLATE W/REFL BRDR(5 SEC)ALUM	EA	2	$ 275.00	$ 550.00
BB55	TRF SIG CBL (TY A)(12 AWG)(2 CONDR)	LF	495	$ 3.00	$ 1,485.00
BB56	TRF SIG CBL (TY A)(14 AWG)(5 CONDR)	LF	530	$ 3.50	$ 1,855.00
BB57	TRF SIG CBL (TY A)(14 AWG)(7 CONDR)	LF	145	$ 5.00	$ 725.00
BB58	TRF SIG CBL (TY A)(14 AWG)(20 CONDR)	LF	520	$ 10.00	$ 5,200.00
BB59	INS TRF SIG PL AM(S)1 ARM(36')LUM&ILSN	EA	1	$ 2,000.00	$ 2,000.00
BB60	INS TRF SIG PL AM(S)1 ARM(44')LUM&ILSN	EA	1	$ 3,500.00	$ 3,500.00
BB61	INS TRF SIG PL AM(S)1 ARM(55')ILSN	EA	1	$ 4,500.00	$ 4,500.00
BB62	INS TRF SIG PL AM(S)1 ARM(55')LUM&ILSN	EA	1	$ 5,000.00	$ 5,000.00
BB63	PED POLE ASSEMBLY	EA	2	$ 3,000.00	$ 6,000.00
BB64	PED DETECT PUSH BUTTON (APS)	EA	4	$ 1,000.00	$ 4,000.00
BB65	PED DETECTOR CONTROLLER UNIT	EA	1	$ 6,000.00	$ 6,000.00
BB66	D-GR HMA TY-C PG70-22	TON	22	$ 710.00	$ 15,620.00
BB67	D-GR HMA TY-D PG70-22	TON	22	$ 710.00	$ 15,620.00
BB68	RVDS (PRESENCE DET ONLY) (INSTALL ONLY)	EA	4	$ 1,000.00	$ 4,000.00
BB70	OWNER'S ALLOWANCE (SEE PAY NOTES)	LS	1	$ 50,000.00	$ 50,000.00
BASE BID SUBTOTAL					$ 668,150.75
Additive Alternative 1 - Andrews HWY and Woodcrest Traffic Signal					
ITEMNO.	**DESCRIPTION**	**UNIT**	**ESTIMATEDQUANTITY**	**UNIT PRICE**	**TOTALAMOUNT BID**
AA1-1	REMOVE CONC (SIDEWALK OR RAMP)	SY	50	$ 95.00	$ 4,750.00
AA1-2	REMOVE SM RD SN SUP&AM	EA	2	$ 200.00	$ 400.00
AA1-3	RELOCATE SM RD SN SUP&AM	EA	1	$ 1,000.00	$ 1,000.00
AA1-4	DRILL SHAFT (TRF SIG POLE) (30 IN)	LF	12	$ 600.00	$ 7,200.00
AA1-5	DRILL SHAFT (TRF SIG POLE) (48 IN)	LF	66	$ 950.00	$ 62,700.00
AA1-6	CONDT (PVC) (SCH 40) (2")	LF	13	$ 20.00	$ 260.00
AA1-7	CONDT (PVC) (SCH 40) (3")	LF	112	$ 30.00	$ 3,360.00
AA1-8	CONDT (PVC) (SCH 40) (3") (BORE)	LF	387	$ 55.00	$ 21,285.00
AA1-9	CONDT (PVC) (SCH 40) (4")	LF	6	$ 40.00	$ 240.00
AA1-10	ELEC CONDR (NO. 6) BARE	LF	464	$ 2.75	$ 1,276.00
AA1-11	ELEC CONDR (NO. 6) INSULATED	LF	14	$ 3.00	$ 42.00
AA1-12	TRAY CABLE (4 CONDR) (12 AWG)	LF	697	$ 13.00	$ 9,061.00
AA1-13	GROUND BOX TY D (162922)W/APRON	EA	4	$ 3,500.00	$ 14,000.00
AA1-14	ELC SRV TY D 120/240 060(NS)SS(E)PS(U)	EA	1	$ 12,500.00	$ 12,500.00
AA1-15	INSTALL HWY TRF SIG (ISOLATED)	EA	1	$ 30,000.00	$ 30,000.00
AA1-16	VEH SIG SEC (12")LED(GRN)	EA	8	$ 450.00	$ 3,600.00
AA1-17	VEH SIG SEC (12")LED(GRN ARROW)	EA	5	$ 450.00	$ 2,250.00
AA1-18	VEH SIG SEC (12")LED(YEL)	EA	8	$ 450.00	$ 3,600.00
AA1-19	VEH SIG SEC (12")LED(YEL ARROW)	EA	8	$ 450.00	$ 3,600.00
AA1-20	VEH SIG SEC (12")LED(RED)	EA	8	$ 450.00	$ 3,600.00
AA1-21	VEH SIG SEC (12")LED(RED ARROW)	EA	6	$ 450.00	$ 2,700.00
AA1-22	PED SIG SEC (LED)(COUNTDOWN)	EA	6	$ 1,000.00	$ 6,000.00
AA1-23	BACK PLATE (12")(3 SEC)(VENTED) ALUM	EA	6	$ 250.00	$ 1,500.00
AA1-24	BACK PLATE (12")(4 SEC)(VENTED) ALUM	EA	5	$ 275.00	$ 1,375.00
AA1-25	TRF SIG CBL (TY A)(14 AWG)(2 CONDR)	LF	654	$ 3.00	$ 1,962.00
AA1-26	TRF SIG CBL (TY A)(14 AWG)(5 CONDR)	LF	380	$ 3.50	$ 1,330.00
AA1-27	TRF SIG CBL (TY A)(14 AWG)(7 CONDR)	LF	240	$ 5.00	$ 1,200.00
AA1-28	TRF SIG CBL (TY A)(14 AWG)(10 CONDR)	LF	199	$ 7.50	$ 1,492.50
AA1-29	TRF SIG CBL (TY A)(14 AWG)(20 CONDR)	LF	464	$ 10.00	$ 4,640.00
AA1-30	INS TRF SIG PL AM (S)1 ARM(20')ILSN	EA	1	$ 2,000.00	$ 2,000.00
AA1-31	INS TRF SIG PL AM (S)1 ARM(50')ILSN	EA	1	$ 4,000.00	$ 4,000.00
AA1-32	INS TRF SIG PL AM (S)1 ARM(50')LUM&ILSN	EA	1	$ 4,500.00	$ 4,500.00
AA1-33	INS TRF SIG PL AM (S)1 ARM(55')ILSN	EA	1	$ 5,000.00	$ 5,000.00
AA1-34	PED POLE ASSEMBLY	EA	1	$ 3,000.00	$ 3,000.00
AA1-35	PED DETECT PUSH BUTTON (APS)	EA	6	$ 1,000.00	$ 6,000.00
AA1-36	PED DETECTOR CONTROLLER UNIT	EA	1	$ 6,000.00	$ 6,000.00

AA1-37	RADAR PRESENCE DETECTOR	EA	4	$ 1,000.00	$ 4,000.00
AA1-38	RADAR PRESENCE DETECTOR COMM CABLE	LF	564	$ 2.00	$ 1,128.00
AA1-39	RADAR ADVANCED DETECTION DEVICE	EA	2	$ 1,000.00	$ 2,000.00
AA1-40	RADAR ADVANCED DETECTOR COMM CABLE	LF	113	$ 2.00	$ 226.00
AA1-41	REFL PAV MRK TY I (W)4"(BRK)(100MIL)	LF	200	$ 4.50	$ 900.00
AA1-42	REFL PAV MRK TY I (W)8"(SLD)(100MIL)	LF	270	$ 4.50	$ 1,215.00
AA1-43	REFL PAV MRK TY I (W)24"(SLD)(100MIL)	LF	416	$ 22.00	$ 9,152.00
AA1-44	REFL PAV MRK TY I (W)(ARROW)(100MIL)	EA	4	$ 440.00	$ 1,760.00
AA1-45	REFL PAV MRK TY I (W)(WORD)(100MIL)	EA	2	$ 550.00	$ 1,100.00
AA1-46	REFL PAV MRK TY I (Y)4"(SLD)(100MIL)	LF	600	$ 4.50	$ 2,700.00
AA1-47	ELIM EXT PAV MRK & MRKS (4")	LF	800	$ 4.50	$ 3,600.00
AA1-48	PAV SURF PREP FOR MRK (4")	LF	800	$ 1.65	$ 1,320.00
AA1-49	PAV SURF PREP FOR MRK (8")	LF	270	$ 3.30	$ 891.00
AA1-50	PAV SURF PREP FOR MRK (24")	LF	416	$ 3.30	$ 1,372.80
AA1-51	PAV SURF PREP FOR MRK (ARROW)	EA	4	$ 165.00	$ 660.00
AA1-52	PAV SURF PREP FOR MRK (WORD)	EA	2	$ 220.00	$ 440.00
AA1-53	CONC SIDEWALKS (4")	SY	45	$ 285.00	$ 12,825.00
AA1-54	CURB RAMPS (TY 1)	EA	4	$ 4,025.00	$ 16,100.00
AA1-55	CONC CURB & GUTTER (TY I)	LF	181	$ 85.00	$ 15,385.00
AA1-56	EXCAVATION (ROADWAY)	CY	1128	$ 45.00	$ 50,760.00
AA1-57	COMPACTED SUBGRADE (8")	SY	1628	$ 4.00	$ 6,512.00
AA1-58	FLEXIBLE BASE (8")	SY	1628	$ 22.00	$ 35,816.00
AA1-59	PRIME COAT (MC-30 OR AEP)	GAL	376	$ 10.25	$ 3,854.00
AA1-60	HMAC SURFACE (TY D)(PG70-22)(2")	TON	144	$ 350.00	$ 50,400.00
AA1-61	HMAC SURFACE (TY C)(PG70-22)(2")	TON	144	$ 350.00	$ 50,400.00
AA1-62	TACK COAT	GAL	125	$ 4.50	$ 562.50
AA1-63	DRILL SEEDING	SY	86	$ 30.00	$ 2,580.00
AA1-64	TOPSOIL (4")	SY	86	$ 30.00	$ 2,580.00
AA1-65	CONDT (PVC) (SCH 40) (2") (BORE)	LF	450	$ 35.00	$ 15,750.00
AA1-66	ELEC CONDR (NO. 6) BARE	LF	450	$ 2.75	$ 1,237.50
AA1-67	ELEC CONDR (NO. 6) INSULATED	LF	900	$ 3.00	$ 2,700.00
AA1-68	GROUND BOX TY B (122322)W/APRON	EA	4	$ 2,500.00	$ 10,000.00
AA1-69	ELC SRV TY T 120/240 000(NS)GS(N)SP(O)	EA	1	$ 8,000.00	$ 8,000.00
AA1-70	ALUMINUM SIGNS (TY A)	SF	9	$ 50.00	$ 450.00
AA1-71	VEH SIG SEC (12")LED(YEL)	EA	2	$ 400.00	$ 800.00
AA1-72	TRF SIG CBL (TY A)(14 AWG)(2 CONDR)	LF	20	$ 3.00	$ 60.00
AA1-73	INSTALL RDSD FLASH BEACON ASSEMBLY	EA	1	$ 10,000.00	$ 10,000.00
AA1-74	OWNER'S ALLOWANCE (SEE PAY NOTES)	LS	1	$ 50,000.00	$ 50,000.00
AA1-75	MOBILIZATION	LS	1	$ 230,000.00	$ 230,000.00
ADDITIVE ALTERNATIVE 1 SUBTOTAL					$ 846,660.30

Additive Alternative 2 - Avalon Dr and Deauville Blvd Traffic Signal

ITEM NO.	DESCRIPTION	UNIT	ESTIMATED QUANTITY	UNIT PRICE	TOTAL AMOUNT BID
AA2-1	MOBILIZATION	LS	1	$ 125,000.00	$ 125,000.00
AA2-2	INSTALLATION OF TRAFFIC SIGNALS (SEE PAY NOTES)	LS	1	$ 271,272.75	$ 271,272.75
AA2-3	OWNER'S ALLOWANCE (SEE PAY NOTES)	LS	1	$ 50,000.00	$ 50,000.00
ADDITIVE ALTERNATIVE 2 SUBTOTAL					$ 446,272.75

Bid Tabulation:

A.	BASE BID SUBTOTAL	$668,150.75
B	ADDITIVE ALTERNATIVE 1 SUBTOTAL	$846,660.30
C	ADDITIVE ALTERNATIVE 2 SUBTOTAL	$446,272.75
TOTAL BID AMOUNT		**$1,961,083.80**

Bid Tabulation:		
A.	BASE BID SUBTOTAL	$ 668,150.75
B	ADDITIVE ALTERNATIVE 1 SUBTOTAL	$ 846,660.30
C	ADDITIVE ALTERNATIVE 2 SUBTOTAL	$ 446,272.75
TOTAL BID AMOUNT		$ 1,961,083.80

In addition to providing the individual prices for the items above, Contractor shall write the total bid amount in the sum of:

One Million Nine hundred sixty-one Thousand Eighty-Three dollars

and Eighty cents total.

The undersigned bidder hereby declares that he has visited the site of the work and has carefully examined the contract documents pertaining to the work covered by the above bid. The selected Bidder will receive written notice to proceed.

Bidder agrees to substantially complete all work within **150 calendar days after receipt of notice to proceed**. Enclosed herewith in this proposal is a cashier's check, cash or bid bond on a form approved by the City Attorney, for:

5% of Greatest Amount Bid dollars

and _____ cents total. ($ 5% Bid Bond)

which is agreed shall be collected and retained by the Owner as liquidated damages in the event this proposal is accepted by the Owner within thirty day (30) after the date advertised for the reception of bids and the undersigned fails to execute the contract and required bonds with the Owner, under the conditions thereof, within (15) days after the date said proposal is accepted; otherwise said check or bond shall be returned to the undersigned on demand.

Tommy Willis — Tommy Willis General Manager

Submitted By — Print Name and Title

Box 7109

Mailing Address

Abilene — TX — 79608

City — State — Zip Code

TXDOT PREQUALIFICATION CERTIFICATION

I hereby certify that the Texas Department of Transportation (check one):

✓ HAS DETERMINED that the undersigned bidder is currently a prequalified contractor qualified under confidential questionnaire.

_____ HAS NOT DETERMINED that the undersigned bidder is currently a prequalified contractor qualified under confidential questionnaire.

Willis Electric Co LP
Name of Contractor

Signature

Tommy Willis, President of
Roy Willis Electric Co., Inc.,
General Partner
Printed Name and Title

Abilene TX 79608
City State Zip

Texas Department of Transportation

125 EAST 11TH STREET | AUSTIN, TEXAS 78701-2483 | (512) 463-8588 | WWW.TXDOT.GOV

March 15, 2023

WILLIS ELECTRIC CO., LP
PO BOX 7109
ABILENE, TX. 79608

RE: TxDOT Vendor Number 10850

Dear Contractor:

Your Confidential Questionnaire is satisfactory and qualifies you to bid on Projects let by the Texas Department of Transportation (TxDOT) from the date of this letter through December 31, 2023.

Your bidding capacity has been set at $142,338,000.00. You may request and receive bidding proposals for projects on which the engineer's estimate does not exceed your bidding capacity less any uncompleted work currently under contract with TxDOT.

If we may be of further assistance, please contact our Pre-qualification Branch at 512/416-2584.

Sincerely,

Greg Williams

Greg Williams
Director, Letting Management Section
Construction Division

THE CITY OF MIDLAND, TEXAS

ANDREWS HIGHWAY AT WOODCREST DRIVE
TRAFFIC SIGNAL DESIGN

PROJECT T20-05

Midland, Texas

MIDLAND
Feel the Energy!

MARCH 2021

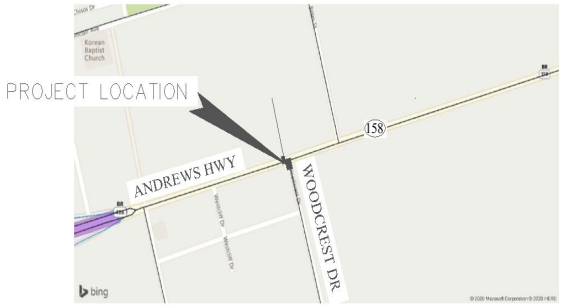

LOCATION MAP
N.T.S.

NORTH

3-15-21

Freese and Nichols, Inc.
Texas Registered Engineering Firm F-2144

FREESE AND NICHOLS

2711 North Haskell Ave, Suite 3300
Dallas, Texas 75204
Phone – (214) 217-2200
Web – www.freese.com

GENERAL

1. SHEET INDEX
2–4. GENERAL NOTES
5. QUANTITY SUMMARY

TRAFFIC SIGNAL

6. EXISTING CONDITIONS
7. TRAFFIC SIGNAL LAYOUT
8. CORNER DETAILS
9. TRAFFIC SIGNAL SUMMARY 1 OF 2
10. TRAFFIC SIGNAL SUMMARY 2 OF 2
11. PAVEMENT MARKINGS
12. ADVANCE WARNING LAYOUT

TRAFFIC SIGNAL AND PAVEMENT MARKING DETAILS

13. MA–C–12 MAST ARM CONNECTIONS
14. MA–C(ILSN)–12 MAST ARM CONNECTIONS(ILSN)
15. MA–D–12 MAST ARM POLE DETAILS
16. MA–DPD–12 MAST ARM DAMPING PLATE DETAILS
17. SMA–80(1)–12 TRAFFIC SIGNAL SUPPORT STRUCTURES SINGLE MAST ARM ASSEMBLY
18. SMA–80(2)–12 TRAFFIC SIGNAL SUPPORT STRUCTURES SINGLE MAST ARM ASSEMBLY
19. TS–CF–04 TRAFFIC SIGNAL CONTROLLER CABINET BASE AND PAD
20. TS–FD–12 TRAFFIC SIGNAL POLE FOUNDATION
21. LMA(1)–12 TRAFFIC SIGNAL SUPPORT STRUCTURES LONG MAST ARM ASSEMBLY
22. LMA(2)–12 TRAFFIC SIGNAL SUPPORT STRUCTURES LONG MAST ARM ASSEMBLY
23. LMA(3)–12 TRAFFIC SIGNAL SUPPORT STRUCTURES LONG MAST ARM ASSEMBLY
24. LMA(4)–12 TRAFFIC SIGNAL SUPPORT STRUCTURES LONG MAST ARM ASSEMBLY
25. LMA(5)–12 LONG MAST ARM ASSEMBLY PARTS LIST
26. WV AND IZ–14 WIND VELOCITY AND ICE ZONES
27. ED(1)–14 ELECTRICAL DETAILS CONDUITS & NOTES
28. ED(2)–14 ELECTRICAL DETAILS CONDUIT SUPPORTS
29. ED(3)–14 ELECTRICAL DETAILS CONDUCTORS
30. ED(4)–14 ELECTRICAL DETAILS GROUND BOXES
31. ED(5)–14 ELECTRICAL DETAILS SERVICE NOTES & DATA
32. ED(6)–14 ELECTRICAL DETAILS SERVICE ENCLOSURE & NOTES
33. ED(8)–14 ELECTRICAL DETAILS TYPICAL TRAFFIC SIGNAL SYSTEM DETAILS
34. ED(9)–14 ELECTRICAL DETAILS ELECTRICAL SERVICE SUPPORT PEDESTAL SERVICE TYPE PS
35. ED(11)–14 ELECTRICAL DETAILS DUCT CABLE/HDPE CONDUIT
36. ED(12)–14–ELECTRICAL DETAILS BATTERY BOX GROUND BOXES
37. PM(1)–12 TYPICAL STANDARD PAVEMENT MARKINGS
38. PM(2)–12 POSITION GUIDANCE USING RAISED MARKERS REFLECTORIZED PROFILE MARKINGS
39. PM(3)–12 PAVEMENT MARKINGS FOR TWO–WAY LEFT TURN LANES DIVIDED HIGHWAYS AND RURAL LEFT TURN BAYS
40. WZ(BTS–1)–13 TRAFFIC SIGNAL WORK TYPICAL DETAILS
41. WZ(BTS–2)–13 TRAFFIC SIGNAL WORK BARRICADES AND SIGNS
42. RFBA–13 ROADSIDE FLASHING BEACON ASSEMBLY
43. STANDARD SIDEWALK (CITY OF MIDLAND STANDARD)
    PERPENDICULAR CURB RAMP (CITY OF MIDLAND STANDARD)
44. DETECTABLE WARNING SURFACE (CITY OF MIDLAND STANDARD)
    STANDARD STREET CROWN CROSS SECTION (CITY OF MIDLAND STANDARD)
45. TYPE A STANDARD CURB AND GUTTER (CITY OF MIDLAND STANDARD)
    SQUARE PERFORATED SIGN POST, FOUNDATION, & SPLICE DETAILS (CITY OF MIDLAND STANDARD)

THE STANDARD SHEETS SPECIFICALLY IDENTIFIED ABOVE BY A ## HAVE BEEN ISSUED BY ME AND ARE APPLICABLE TO THIS PROJECT.

PACKET 5.41 July 11, 2023

P.E. DATE

Freese and Nichols, Inc.
Texas Registered Engineering Firm F-2144

3-15-21

FREESE NICHOLS
2711 North Haskell Ave, Suite 3300
Dallas, Texas 75204
Phone: 214.217.2200
Web – www.freese.com

CITY OF MIDLAND, TX
ANDREWS HWY AT WOODCREST DR
CIVIL
SHEET INDEX

NO.	ISSUE	BY	DATE

F&N JOB NO. M00201.73
DATE 08/2020
DESIGNED MRF
DRAWN MRF
REVISED -
CHECKED NAH
FILE NAME CV-SUMM-SHEET INDEX.dwg

VERIFY SCALE Bar is one inch on original drawing. If not one inch on this sheet, adjust scale.
0 1"

SHEET
SEQ. 1

ACAD Rel: 21.0s (LMS Tech)
Xrefnames: N:\IF\Drawings\8. Traffic\CV-SUMM-SHEET INDEX.dwg
Last Saved: 3/8/2021 7:02 PM Saved By: 02480

GENERAL NOTES:
TRAFFIC SIGNAL INSTALLATION

PLEASE CONTACT THE CITY OF MIDLAND TRAFFIC ENGINEER AT 432-685-7280 SO THAT A REPRESENTATIVE MAY ATTEND THE PRE-CONSTRUCTION MEETING.

UNDERGROUND UTILITIES MAY BE PRESENT WITHIN THE RIGHT-OF-WAY ON THIS PROJECT. FOR SIGNAL, ILLUMINATION, SURVEILLANCE, AND COMMUNICATION AND CONTROL, CONTACT BOTH THE CITY UTILITIES DEPARTMENT AND TRANSPORTATION DIVISION FOR LOCATES A MINIMUM OF 48 HOURS IN ADVANCE OF EXCAVATION.

THE LOCATIONS OF ALL SIGNAL RELATED ITEMS, PAVEMENT MARKINGS, SIGNING, ETC. ARE DIAGRAMMATIC ONLY AND MAY BE SHIFTED TO ACCOMMODATE FIELD CONDITIONS AND/OR AS DIRECTED BY ENGINEER.

UNLESS OTHERWISE INDICATED IN THE PLANS OR SPECIFICATIONS, ALL WORK SHALL CONFORM TO THE STANDARDS, DETAILS, AND SPECIFICATIONS OF THE TEXAS DEPARTMENT OF TRANSPORTATION.

ITEM 416: DRILLED SHAFT FOUNDATION

LOCATIONS OF FOUNDATIONS SHOWN ON THE PLANS ARE FOR DIAGRAMMATIC PURPOSES ONLY AND MAY BE VARIED TO MEET LOCAL CONDITIONS, SUBJECT TO APPROVAL. STAKE THESE LOCATIONS AND HAVE THEM APPROVED BY THE INSPECTOR BEFORE INSTALLATION OF FOUNDATIONS. THIS WILL ENSURE THAT ALL LUMINAIRES AND MAST ARMS ARE CLEAR OF ALL OVERHEAD LINES AND UNDERGROUND UTILITIES BEFORE DRILLING BEGINS.

THE INSPECTOR, TOGETHER WITH THE CONTRACTOR, WILL CALCULATE THE VERTICAL SIGNAL HEAD CLEARANCE BEFORE PLACING ANY TRAFFIC SIGNAL POLE FOUNDATION.

SET ANCHOR BOLTS FOR STRAIN POLES FOR SIGNALS. SET TWO IN TENSION AND TWO IN COMPRESSION. OBTAIN APPROVAL OF ANCHOR BOLT PLACEMENT AS DIRECTED BEFORE PLACING CONCRETE.

NOTIFY THE INSPECTOR 48 HOURS PRIOR TO FORMING AND PLACING CONCRETE IN ANY OF THE SIGNAL POLE AND CONTROLLER FOUNDATIONS. DO NOT PLACE CONCRETE WITHOUT AN INSPECTOR PRESENT. FAILURE TO INFORM THE INSPECTOR AND PROVIDE ADEQUATE TIME TO ARRIVE ON THE JOB SITE MAY RESULT IN REMOVING AND REPLACING THE FOUNDATION.

INSTALL A 5/8"X10' COPPER CLAD GROUND ROD IN EACH TRAFFIC SIGNAL POLE FOUNDATION. THE GROUND ROD FOR EACH FOUNDATION WILL PROTRUDE ABOVE THE FINISH GRADE OF THE FOUNDATION A MINIMUM OF 1" AND A MAXIMUM OF 2".

PROVIDE A SMOOTH FINISH FOR ALL PORTIONS OF DRILL SHAFTS EXTENDING ABOVE PROPOSED GROUND. INCLUDE COST FOR THIS WORK IN THE UNIT BID PRICE FOR THIS ITEM.

TRAFFIC SIGNAL POLE FOUNDATIONS WILL BE PAID FOR ONCE REGARDLESS OF EXTRA WORK CAUSED BY OBSTRUCTIONS.

CONCRETE REMOVAL REQUIRED FOR INSTALLATION OF DRILLED SHAFTS WILL BE SUBSIDIARY TO ITEM 416.

ITEM 421: HYDRAULIC CEMENT CONCRETE

FURNISH MIX DESIGNS TO THE ENGINEER AT LEAST 48 HOURS PRIOR TO PLACING CONCRETE. PROVIDE AN APPROVED PRIVATE LABORATORY CONTRACTOR TO PERFORM THE NEEDED CONCRETE TESTING.

ITEM 449: ANCHOR BOLTS

USE PIPE JOINT COMPOUND THAT IS AN ELECTRICALLY CONDUCTING PROTECTIVE THREAD LUBRICANT COMPOUND TO BE USED ON THE FOUNDATION ANCHOR BOLTS FOR TRAFFIC SIGNAL POLES (CROUSE-HINDS TL-2, OZ/GEDNEY STL, THOMAS & BETTS KOPR-SHIELD, OR EQUAL).

ITEM 502: BARRICADES, SIGNS, AND TRAFFIC HANDLING

USE TEMPORARY TRAFFIC CONTROL (TTC) FOR THIS PROJECT AS DETAILED ON THE LATEST TEXAS DEPARTMENT OF TRANSPORTATION BC STANDARD PLAN SHEETS, AND WZ (BTS-1 AND BTS-2)-13, AS PROVIDED FOR IN PART VI OF THE TEXAS MANUAL ON UNIFORM TRAFFIC CONTROL DEVICES, AND AS INDICATED ON THE TITLE SHEET.

IN ADDITION TO THE TTC AND THE LATEST WZ STANDARD PLAN SHEETS, INSTALL BARRICADES AND WARNING SIGNS, AS APPROPRIATE, TO ADEQUATELY WARN MOTORISTS. PERMANENT SIGNS MAY BE INSTALLED WHEN CONSTRUCTION IN AN AREA IS COMPLETE AND THEY WILL NOT BE IN CONFLICT WITH THE TRAFFIC CONTROL PLAN FOR THE REMAINDER OF THE JOB.

EXISTING SIGNS ARE TO REMAIN AS LONG AS THEY DO NOT INTERFERE WITH CONSTRUCTION AND THEY DO NOT CONFLICT WITH THE TRAFFIC CONTROL PLAN.

WHEN TRAFFIC IS OBSTRUCTED, ARRANGE WARNING DEVICES IN ACCORDANCE WITH ARRANGEMENTS INDICATED IN THE LATEST EDITION OF THE "TEXAS MANUAL ON UNIFORM TRAFFIC CONTROL DEVICES." WHEN ADVANCED WARNING FLASHING ARROW PANELS AND/OR CHANGEABLE MESSAGE SIGN IS SPECIFIED, HAVE ONE STANDBY UNIT IN GOOD CONDITION AT THE JOB SITE.

COVER OR REMOVE ANY WORK ZONE SIGNS WHEN WORK OR CONDITION REFERENCED IS NOT OCCURRING.

NO WORK WILL BE PERMITTED TO COMMENCE ON THE ROAD BEFORE SUNRISE AND SHALL BE ARRANGED SO THAT ALL MACHINERY AND/OR EQUIPMENT SHALL BE AWAY FROM THE ROADWAY NEAR THE R.O.W. LINE AFTER SUNSET. ANY OPERATIONS REQUIRING LANE CLOSURES SHALL NOT BEGIN BEFORE 9:00 A.M. OR CONTINUE PAST 4:00 P.M. UNLESS OTHERWISE APPROVED BY THE ENGINEER.

DO NOT PLACE BARRICADES, SIGNS, OR ANY OTHER TRAFFIC CONTROL DEVICES WHERE THEY INTERFERE WITH SIGHT DISTANCE AT DRIVEWAYS OR SIDE STREETS. PROVIDE ACCESS TO ALL DRIVEWAYS DURING ALL PHASES OF CONSTRUCTION. ATTENTION IS CALLED TO THE FACT THAT ALL LOCATIONS USED FOR STORING CONSTRUCTION EQUIPMENT AND MATERIALS OF ANY TYPE WITHIN THE RIGHT OF WAY SHALL BE APPROVED BY THE ENGINEER.

USE OF THE RIGHT OF WAY FOR THESE PURPOSES WILL BE RESTRICTED TO THOSE LOCATIONS WHERE DRIVER SIGHT DISTANCE TO BUSINESSES AND SIDE STREET INTERSECTIONS IS NOT OBSTRUCTED AND AT OTHER LOCATIONS WHERE AN UNSIGHTLY APPEARANCE, AS DETERMINED BY THE ENGINEER, WILL NOT EXIST.

REMOVE ANY OBSTRUCTIONS TO EXISTING DRAINAGE DUE TO THE CONTRACTOR'S OPERATIONS AS REQUIRED, AT THE CONTRACTORS EXPENSE.

ITEM 531: SIDEWALKS

THE CURB RAMP LOCATIONS SHOWN IN THE PLANS HAVE TAKEN INTO ACCOUNT THE GEOMETRIC FEATURES OF THE INTERSECTION, TRAFFIC SIGNALS, AND THE PAVEMENT MARKINGS. IF ANYTHING CHANGES DURING CONSTRUCTION, THE LOCATION OF CURB RAMPS MUST BE ADJUSTED TO ENSURE THEY MEET TAS/ADAAG REQUIREMENTS.

ITEM 618: CONDUIT

SECURE PERMISSION AND APPROVAL FROM THE PROPER AUTHORITY PRIOR TO CUTTING INTO OR REMOVING ANY SIDEWALKS OR CURBS FOR INSTALLATION OF THIS ITEM.

WHEN HOLES ARE DRILLED THROUGH CONCRETE STRUCTURES, USE A CORING DEVICE. DO NOT USE MASONRY OR CONCRETE DRILLS.

STRUCTURALLY MOUNT JUNCTION BOXES AS SHOWN ON THE PLANS. WHEN USED FOR TRAFFIC SIGNAL INSTALLATIONS, USE BOXES 12"X12"X8", OR AS APPROVED.

USE CONDUIT HANGERS FOR 3 INCH AND LARGER CONDUIT WHEN HANGING CONDUIT FROM STRUCTURES.

WHEN CONDUIT MUST BE PLACED BY TRENCHING IN PAVED AREAS, CUT AND RESTORE PAVEMENT IN ACCORDANCE WITH ITEM 400, ARTICLE 400.3.A.1.B, AND AS SHOWN IN THE PLANS. CUT PAVEMENT USING ONLY APPROVED SAWS. CUTTING AND RESTORING PAVEMENT WILL NOT BE PAID FOR DIRECTLY, BUT WILL BE SUBSIDIARY TO THIS ITEM.

DO NOT PLACE BORING PITS CLOSER THAN 2 FEET FROM THE EDGE OF THE PAVEMENT UNLESS OTHERWISE DIRECTED. DO NOT USE WATER JETTING. WHEN BORING IS USED FOR UNDER PAVEMENT CONDUIT INSTALLATIONS, THE MAXIMUM ALLOWABLE OVER-CUT IS 1" IN DIAMETER. WHEN CONDUITS ARE BORED, DO NOT EXCEED 18 INCHES IN THE VERTICAL AND HORIZONTAL TOLERANCES AS MEASURED FROM THE INTENDED TARGET POINT.

DO NOT USE A PNEUMATICALLY DRIVEN DEVICE FOR PUNCHING HOLES BENEATH THE PAVEMENT (COMMONLY KNOWN AS A "MISSILE").

FURNISH AND INSTALL A NON-METALLIC PULL ROPE IN CONDUIT RUNS IN EXCESS OF 50 FEET.

USE A COLORED CLEANER-PRIMER ON ALL PVC TO PVC JOINTS BEFORE APPLICATION OF PVC CEMENT.

SEAL ALL CONDUIT ENDS WITH A PERMANENTLY SOFT, NON-TOXIC DUCT SEAL. USE A DUCT SEAL THAT DOES NOT ADVERSELY AFFECT OTHER PLASTIC MATERIALS OR CORRODE METALS.

FURNISH AND INSTALL NON-METALLIC PULL ROPES IN CONDUIT INSTALLED FOR FUTURE USE AND CAP USING STANDARD WEATHER-TIGHT CONDUIT CAPS, AS APPROVED. THIS WORK WILL NOT BE PAID FOR DIRECTLY, BUT IS SUBSIDIARY TO THIS ITEM.

2" SCHEDULE 80 PVC WILL BE USED AT THE POWER POLE TO SUPPLY ELECTRICITY TO UNDERGROUND SERVICES.

IF PLACING RM CONDUIT ON BRIDGE STRUCTURES DO SO AS DIRECTED. WHERE PVC, DUCT CABLE, AND HDPE CONDUIT 1" AND LARGER IS ALLOWED AND INSTALLED AS PER TXDOT STANDARDS, PROVIDE A PVC ELBOW IN PLACE OF THE GALVANIZED RIGID METAL ELBOW REQUIRED BY THE ELECTRICAL DETAIL STANDARDS. ENSURE THE PVC ELBOW IS OF THE SAME SCHEDULE RATING AS THE CONDUIT TO WHICH IT IS CONNECTED. ENSURE ONLY A FLAT, HIGH TENSILE STRENGTH POLYESTER FIBER PULL TAPE IS USED FOR PULLING CONDUCTORS THROUGH THE PVC CONDUIT SYSTEM.

THE LOCATIONS OF CONDUIT AND GROUND BOXES ARE DIAGRAMMATIC ONLY AND MAY BE SHIFTED TO ACCOMMODATE FIELD CONDITIONS AS DIRECTED.

ITEM 620: ELECTRICAL CONDUCTORS

TERMINATE ALL ELECTRICAL CONDUCTORS FROM THE CONTROLLER AT THE TERMINATION BLOCK IN THE TRAFFIC SIGNAL POLE HAND HOLE WHETHER IN USE OR NOT.

ALL WIRING NOT COVERED BY THE PLANS AND SPECIFICATIONS SHALL BE IN ACCORDANCE WITH THE NATIONAL ELECTRIC CODE (NEC).

WHEN THE SPECIFICATIONS FOR ELECTRICAL ITEMS REQUIRE UL LISTED PRODUCTS, IT WILL BE CONSTRUED TO MEAN UL LISTED OR CSA LISTED.

BOND TOGETHER ANY GROUNDING CONDUCTORS THAT SHARE THE SAME CONDUIT, JUNCTION BOX, GROUND BOX, OR STRUCTURE, AT EVERY ACCESSIBLE POINT IN ACCORDANCE WITH THE NATIONAL ELECTRICAL CODE (NEC).

ITEM 621: TRAY CABLE

ALL PROPOSED TRAY CABLE AND NUMBER OF CONDUCTORS REQUIRED SHALL BE AS SHOWN ON THE PLANS. NO SPLICES SHALL BE ALLOWED.

ITEM 624: GROUND BOXES

LOCATIONS OF GROUND BOXES ARE APPROXIMATE. FINAL LOCATIONS WILL BE AS APPROVED. PROVIDE AN APRON FOR GROUND BOXES AS SHOWN ON STANDARD ED (3)-03.

SLACK CONDUCTORS REQUIRED BY STANDARD SHEET ED(2)-03 WILL BE SUBSIDIARY TO ITEM 624.

CONCRETE REMOVAL REQUIRED FOR INSTALLATION OF GROUND BOXES WILL BE SUBSIDIARY TO ITEM 624.

SEAL GROUND BOXES WITH POLYURETHANE FOAM THAT WILL NOT ADVERSELY AFFECT OTHER PLASTIC MATERIALS OR CORRODE METALS (FROTH-PAK 115 2.75 DENSITY 157833 OR APPROVED EQUAL).

Freese and Nichols, Inc.
Texas Registered Engineering Firm F-2144

3-15-21

FREESE NICHOLS
2711 North Haskell Ave, Suite 3300
Dallas, Texas 75204
Phone: 214-217-2200
Web: www.freese.com

CITY OF MIDLAND, TX

ANDREWS HWY AT WOODCREST DR

CIVIL

GENERAL NOTES

NO.	ISSUE	BY	DATE

F&N JOB NO. M00201173
DATE 08/2020
DESIGNED MRF
DRAWN MRF
REVISED -
CHECKED NAH
FILE NAME CV-SUMM- GENERAL NOTES.dwg

VERIFY SCALE Bar is one inch on original drawing. If not one inch on this sheet, adjust scale.
0 1"

SHEET

SEQ. 2

ACAD Rel: 21.0s (LMS Tech)
Xrefs: N:\IF\Drawings\8. Traffic\CV-SUMM- GENERAL NOTES.dwg
Last Saved: 3/7/2021 4:19 PM Saved By: 02480

Plot Date: 3/8/2021 6:50 PM Plot By: 02480 Filename: N:\IF\Drawings\8. Traffic\CV-SUMM- GENERAL NOTES.dwg

GENERAL NOTES:

TRAFFIC SIGNAL INSTALLATION

ITEM 628: ELECTRICAL SERVICES

CONTACT THE ELECTRIC UTILITY COMPANY TO MAKE ALL NECESSARY ARRANGEMENTS TO PROVIDE POWER FOR THE ELECTRICAL SERVICE SHOWN ON THE PLANS IN ACCORDANCE WITH ARTICLE 628.5 AND THE ELECTRICAL DETAILS, EXCEPT THAT THE CITY OF MIDLAND WILL MAKE APPLICATION TO THE ELECTRIC UTILITY COMPANY FOR SERVICE. BEFORE FABRICATING THE ELECTRICAL SERVICE, CONTACT THE CITY OF MIDLAND SIGNAL SHOP SUPERVISOR (PHONE 432-685-7928), TO MAKE APPLICATION (BILLING ARRANGEMENTS) FOR SERVICE WITH THE ELECTRIC UTILITY COMPANY.

TIME-CHARGE SUSPENSION DUE TO THE AVAILABILITY OF POWER SHALL NOT BE CONSIDERED UNLESS ALL ARRANGEMENTS FOR POWER HAVE BEEN SUBMITTED WITHIN FIFTEEN (15) DAYS AFTER THE PROJECT WORK HAS BEGUN.

LABEL THE SERVICE ENCLOSURES INDICATING SERVICE ADDRESS AS WELL AS ALL REQUIRED INFORMATION AS SHOWN ON THE ELECTRICAL DETAIL (ED) STANDARD SHEETS. LABELING SHALL BE SILK SCREENING OR OTHER ACCEPTABLE METHOD. THIS WORK WILL NOT BE PAID FOR DIRECTLY, BUT IS SUBSIDIARY TO THIS ITEM.

WHEN CONCRETE FOR SERVICE POLE FOUNDATIONS IS REQUIRED, USE CLASS A IN ACCORDANCE WITH ITEM 421, "HYDRAULIC CEMENT CONCRETE", EXCEPT CONSIDER THE CONCRETE SUBSIDIARY TO ITEM 628 FOR PAYMENT PURPOSES. WHEN REINFORCING STEEL FOR SERVICE POLE FOUNDATIONS IS REQUIRED, IT WILL BE IN ACCORDANCE WITH ITEM 440,"REINFORCING STEEL", EXCEPT CONSIDER THE STEEL SUBSIDIARY TO ITEM 628 FOR PAYMENT PURPOSES.

USE ONLY WHITE INSULATED WIRE FOR NEUTRAL WIRE.

ITEM 636: ALUMINUM SIGNS

ALL SIGNS INSTALLED AS PART OF THIS PROJECT SHALL CONFORM TO TXDOT STANDARD ITEM 636.

ITEM 644: SMALL ROADSIDE SIGN SUPPORTS AND ASSEMBLIES

ALL SIGN SUPPORTS AND ASSEMBLIES INSTALLED AS PART OF THIS PROJECT SHALL CONFORM TO TXDOT STANDARD ITEM 644.

ITEM 650: OVERHEAD SIGN SUPPORTS

ALL OVERHEAD SIGN SUPPORTS AND ASSEMBLIES INSTALLED AS PART OF THIS PROJECT SHALL CONFORM TO TXDOT STANDARD ITEM 650.

ITEM 656: FOUNDATIONS FOR TRAFFIC CONTROL DEVICES

FOUNDATIONS FOR TRAFFIC SIGNAL CONTROLLER IS SUBSIDIARY TO ITEMS 680.

LOCATIONS OF FOUNDATIONS SHOWN ON THE PLANS ARE FOR DIAGRAMMATIC PURPOSES ONLY AND MAY BE VARIED TO MEET LOCAL CONDITIONS, SUBJECT TO APPROVAL. STAKE THESE LOCATIONS AND HAVE THEM APPROVED BY THE INSPECTOR BEFORE INSTALLATION OF FOUNDATIONS. THIS WILL ENSURE THAT ALL LUMINAIRES AND MAST ARMS ARE CLEAR OF ALL OVERHEAD LINES AND UNDERGROUND UTILITIES BEFORE DRILLING BEGINS.

THE INSPECTOR, TOGETHER WITH THE CONTRACTOR, WILL CALCULATE THE VERTICAL SIGNAL HEAD CLEARANCE BEFORE PLACING ANY TRAFFIC SIGNAL POLE FOUNDATION.

ITEM 666: REFLECTORIZED PAVEMENT MARKINGS

ALL PAVEMENT MARKINGS SHALL CONFORM TO TXDOT STANDARD ITEM 666.

ITEM 672: RAISED PAVEMENT MARKERS

WHITE ADHESIVE WILL BE USED ON CONCRETE PAVEMENTS. ALL OTHER WORK SHALL CONFORM TO TXDOT STANDARD ITEM 672.

ITEM 677: ELIMINATING EXISTING PAVEMENT MARKINGS AND MARKERS

ALL WORK FOR THE ELIMINATION OF EXISTING PAVEMENT MARKINGS AND MARKERS SHALL CONFORM TO TXDOT STANDARD ITEM 677.

ITEM 678: PAVEMENT SURFACE PREPARATION FOR MARKINGS

ALL WORK FOR THE PREPARATION OF PAVEMENT SURFACES FOR MARKINGS SHALL CONFORM TO TXDOT STANDARD ITEM 678.

ITEM 680: INSTALLATION OF HIGHWAY TRAFFIC SIGNALS

NOTIFY THE CITY OF MIDLAND TRAFFIC ENGINEER AT 432-685-7280 ONE WEEK BEFORE BEGINNING ANY WORK INVOLVING TRAFFIC SIGNALS.

THIS PROJECT SHALL CONSIST OF THE INSTALLATION OF ALL OF THE MATERIALS NECESSARY FOR COMPLETE SIGNAL SYSTEMS AS FOLLOWS:

1. PROVIDE SUBMITTAL LITERATURE FOR ALL TRAFFIC SIGNAL EQUIPMENT BEFORE INSTALLATION. EQUIPMENT WILL NOT BE ACCEPTED FOR DELIVERY OR ANY PAYMENT MADE UNTIL THE EQUIPMENT, MATERIALS LISTS AND SHOP DRAWINGS HAVE BEEN APPROVED BY THE ENGINEER. APPROVAL BY THE ENGINEER DOES NOT RELIEVE THE CONTRACTOR OF HIS RESPONSIBILITIES TO MEET THE REQUIREMENTS OF THE SPECIFICATIONS AND PLANS. ALL SUBMITTAL LITERATURE SHALL BE APPROVED AND VERIFIED FOR ALL THE FURNISHED TRAFFIC SIGNAL EQUIPMENT PRIOR TO ITS INSTALLATION.
2. FURNISH AND INSTALL ALL REQUIRED MATERIALS AND EQUIPMENT NECESSARY FOR THE COMPLETE AND OPERATING TRAFFIC SIGNAL INSTALLATION.
3. ACCOMPLISH THE ERECTION OF POLES AND LUMINAIRES LOCATED NEAR ANY OVERHEAD ELECTRICAL LINES USING ESTABLISHED INDUSTRY AND UTILITY SAFETY PRACTICES. CONSULT WITH THE APPROPRIATE UTILITY COMPANY BEFORE BEGINNING SUCH WORK.
4. THE LOCATIONS SHOWN ON THE PLANS FOR CONTROLLER FOUNDATIONS, CONDUIT AND OTHER ITEMS MAY BE ADJUSTED TO BETTER FIT FIELD CONDITIONS AS APPROVED, DUE TO CONFLICTS WITH UTILITIES.
5. USE A VULCAN SWINGER SIGN MOUNTING BRACKET OR EQUIVALENT FOR ALL SIGNS MOUNTED ON SPAN WIRES.
6. PROVIDE VIBRATION DAMPERS FOR MAST ARMS 28 FEET LONG AND LONGER. USE DAMPERS 18"X48" FOR ARMS UP TO 48 FEET LONG, AND 16"X66" FOR LONGER MAST ARMS. INSTALL USING ASTRO-BRAC, SIGNFIX ALUMINUM CHANNEL, OR EQUAL, AT A MAXIMUM OF 3 FEET FROM THE END OF THE MAST ARM.
7. PROVIDE A QUALIFIED TECHNICIAN ON THE PROJECT SITE TO PLACE THE TRAFFIC SIGNALS IN FULL OPERATION.
8. INSTALL THE CITY OF MIDLAND SUPPLIED BATTERY BACK-UP SYSTEM, CONTROLLER AND CABINET ASSEMBLY.

CITY OF MIDLAND CONTROLLER		
1	PROVIDED BY CITY OF MIDLAND	SIGNAL CONTROLLER
1	PROVIDED BY CITY OF MIDLAND	NEMA TS2 TYPE 2 CABINET
1	PROVIDED BY CITY OF MIDLAND	CONFLICT MONITOR

CONTACT THE CITY OF MIDLAND SIGNAL SHOP SUPERVISOR AT (432) 685-7928 TO COORDINATE A PICK UP TIME.

9. THE CITY OF MIDLAND WILL NOT ASSUME RESPONSIBILITY FOR THE MAINTENANCE OF THE TRAFFIC SIGNALS UNTIL THE PROJECT IS COMPLETED AND ACCEPTED.

10. WIRE THE SIGNAL INSTALLATION TO OPERATE IN ACCORDANCE WITH PHASE DIAGRAMS IN THESE PLANS. TIMING AND PHASING WILL BE CHANGED AND MAINTAINED BY THE CITY OF MIDLAND TRAFFIC ENGINEERING GROUP. A COPY OF ALL REVISIONS TO THE ORIGINAL TIMING AND PHASING PLANS WILL BE DELIVERED TO THE CITY OF MIDLAND TRAFFIC ENGINEERING GROUP AND ONE COPY IS TO STAY IN THE CONTROLLER CABINET AT THE COMPLETION OF THE PROJECT.

11. PLACE THE TRAFFIC SIGNAL INTO OPERATION ONLY AFTER ALL REQUIRED STRIPING IS COMPLETE AND ALL CONFLICTING SIGNING IS REMOVED.

12. PROJECT INSPECTION: FOR ELECTRICAL PROJECT INSPECTION, CONTACT THE CITY OF MIDLAND SIGNAL SHOP IN ADVANCE OF NEEDED INSPECTIONS. AT THE TIME OF THE FINAL ELECTRICAL INSPECTION, THE CITY OF MIDLAND WILL CREATE A PUNCH LIST OF DISCREPANCIES TO BE CORRECTED BEFORE SIGNAL IS PUT INTO FLASH MODE.

13. SIGNAL TURN-ON: NOTIFY THE CITY OF MIDLAND SIGNAL SHOP SUPERVISOR APPROXIMATELY 48 HOURS IN ADVANCE OF THE SIGNAL TURN ON. SIGNAL TECHNICIANS FROM THE CITY OF MIDLAND MUST BE PRESENT WHEN THE SIGNALS ARE PLACED IN FULL OPERATION. UNLESS OTHERWISE DIRECTED, PLACE THE SIGNAL IN FULL OPERATION BETWEEN 9:00 A.M. -12:00 (NOON) ON MONDAYS, TUESDAYS, OR WEDNESDAYS ONLY.

14. TEST PERIOD FOR SIGNALS: THE SIGNALS SHALL OPERATE CONTINUOUSLY FOR A MINIMUM OF 30 CALENDAR DAYS IN A SATISFACTORY MANNER. EQUIPMENT FAILURES DURING THESE 30 DAYS WILL CAUSE THE TEST PERIOD TO START OVER.

15. DURING THE THIRTY-DAY TEST PERIOD, THE CITY OF MIDLAND SIGNAL SHOP WILL BE THE FIRST RESPONDERS TO ALL TROUBLE CALLS. THEY WILL, IN TURN CONTACT THE CONTRACTOR. PROVIDE QUALIFIED PERSONNEL TO RESPOND TO THESE AND ALL TROUBLE CALLS. REPAIR AND DIAGNOSE ANY MALFUNCTIONS TO SIGNAL EQUIPMENT SUPPLIED FOR THE PROJECT. PROVIDE A TELEPHONE NUMBER, NOT SUBJECT TO FREQUENT CHANGES AND AVAILABLE TO RECEIVE CALLS ON A 24-HOUR BASIS. RESPOND TO REPORTED CALLS WITHIN A REASONABLE TRAVEL TIME, (I.E. FROM A MIDLAND ADDRESS), BUT NOT MORE THAN 2 HOURS MAXIMUM. MAKE APPROPRIATE REPAIRS WITHIN 24 HOURS. PLACE A LOGBOOK IN THE CONTROLLER CABINET AND KEEP A RECORD OF EACH TROUBLE CALL REPORTED. NOTIFY THE ENGINEER OF EACH TROUBLE CALL. THE ERROR LOG IN THE CONFLICT MONITOR SHALL NOT BE CLEARED DURING THE THIRTY-DAY TEST PERIOD WITHOUT APPROVAL. IF IT IS NECESSARY TO REPLACE EQUIPMENT, SUCH AS A CONTROLLER, IN ORDER TO RETURN THE SIGNALS TO NORMAL OPERATION, THE CITY OF MIDLAND WILL REPLACE THE EQUIPMENT WITH LOANED EQUIPMENT UNTIL THE ORIGINAL EQUIPMENT IS REPAIRED AND THEN REPLACED.

ITEM 682: VEHICLE AND PEDESTRIAN SIGNAL HEADS PROVIDE ALL SIGNAL HEADS FROM THE SAME MANUFACTURER.

PROVIDE ALL LED TRAFFIC SIGNAL LAMP UNITS, AS WELL AS THE VARIOUS COMPONENTS OF THE SIGNAL HEADS TO BE INSTALLED WITHIN THIS PROJECT.

TRAFFIC SIGNAL HEADS SHALL BE YELLOW POLYCARBONATE WITH BLACK, VENTED, ALUMINUM BACKPLATES. SIGNAL HEADS MOUNTED ON POLES AND MAST ARMS SHALL BE LEVEL AND PLUMB AND AIMED AS DIRECTED. COVER ALL SIGNAL FACES UNTIL PLACED IN OPERATION.

FOR ALL PROPOSED MAST ARM POLE ASSEMBLIES, PROVIDE MOUNTING BRACKET ASSEMBLY AS DESCRIBED ON THE STATE STANDARD SHEETS "SINGLE MAST ARM ASSEMBLIES."

ITEM 684: TRAFFIC SIGNAL CABLES INCLUDE EXTRA CABLE LENGTH IN EACH RUN TO PROVIDE ADEQUATE SLACK, AT EACH GROUND BOX, FOUNDATION AND SIGNAL HEAD. IDENTIFY EACH CABLE AS SHOWN ON THE PLANS (CABLE 1, ETC.) WITH PRE-NUMBERED IDENTIFICATION TAGS OF PLASTIC, TAPE OR MARKING LABELS AT EACH SIGNAL HEAD, GROUND BOX, TERMINAL BLOCK, POLE BASE AND CONTROLLER.

ALL CABLES SHALL BE CONTINUOUS WITHOUT SPLICES FROM TERMINAL POINT TO TERMINAL POINT OR AS DIRECTED OR APPROVED. ALL PROPOSED SIGNAL CABLE AND NUMBER OF CONDUCTORS REQUIRED SHALL BE AS SHOWN ON THE PLANS. TERMINATE ALL ELECTRICAL CONDUCTORS FROM THE CONTROLLER AT THE TERMINATION BLOCK IN THE SIGNAL POLE HAND HOLE WHETHER IN USE OR NOT.

PROVIDE AN EXTRA 10' FOR EACH CABLE TERMINATING IN THE CONTROLLER CABINET. ALL CABLES SHALL BE CONTINUOUS WITHOUT SPLICES FROM TERMINAL POINT TO TERMINAL POINT. PROVIDE STRANDED 14 AWG TYPE A SIGNAL CABLES. PROVIDE 12 AWG TYPE C SIGNAL CABLES FOR ACCESSIBLE PEDESTRIAN SIGNAL UNITS. PROVIDE THE NUMBER OF CONDUCTORS AS SHOWN ON THE PLANS.

PROVIDE ALUMINUM PEDESTRIAN AND VEHICLE SIGNAL HEADS IN THE FOLLOWING COLOR: FEDERAL YELLOW #13538 OF FEDERAL STANDARD 595. PROVIDE NON-PAINTED ALUMINUM TUBING. PROVIDE BACK PLATES, LOUVERS, AND THE INSIDE OF VISORS WITH A FLAT BLACK FINISH. PROVIDE ALUMINUM VENTED BACK PLATES FOR ALL TRAFFIC SIGNAL HEADS.

ITEM 687: PEDESTAL POLE ASSEMBLIES

ITEM 687 SHALL BE IN ACCORDANCE WITH TXDOT STANDARD SPECIFICATION.

ITEM 688: PEDESTRIAN DETECTORS AND VEHICLE LOOP DETECTORS

AT INTERSECTIONS WHERE A MINIMUM OF 10 FT. SPACING BETWEEN ADJACENT ACCESSIBLE PEDESTRIAN SIGNAL UNITS IS NOT POSSIBLE, EACH ACCESSIBLE PEDESTRIAN PUSHBUTTON MUST BE PROVIDED WITH THE FOLLOWING FEATURES:

- A PUSHBUTTON LOCATOR TONE,
- A TACTILE ARROW,
- A SPEECH WALK MESSAGE FOR THE WALKING PERSON INDICATION AND
- A SPEECH PUSHBUTTON INFORMATION MESSAGE.

Freese and Nichols, Inc.
Texas Registered Engineering Firm F-2144
KEVIN R. ST. JACQUES 69700 3-15-21
FREESE AND NICHOLS
2711 North Haskell Ave, Suite 3300
Dallas, Texas 75204
Phone - (214) 217-2200
Web - www.freese.com

CITY OF MIDLAND, TX
ANDREWS HWY AT WOODCREST DR
CIVIL
GENERAL NOTES

F&N JOB NO. MDD20173
DATE 08/2020
DESIGNED MRF
DRAWN MRF
REVISED
CHECKED NAH
FILE NAME CV-SUMM- GENERAL NOTES.dwg
NO. ISSUE BY DATE
VERIFY SCALE 0 1 Bar is one inch on original drawing. If not one inch on this sheet, adjust scale.
SHEET
SEQ. 3
ACAD Rel: 21.0s (LMS Tech)
Filename: N:\IF\Drawings\8. Traffic\CV-SUMM- GENERAL NOTES.dwg
Last Saved: 3/7/2021 4:19 PM Saved By: 02480
Plot Date: 3/8/2021 6:50 PM Plot By: 02480 Filename: N:\IF\Drawings\8. Traffic\CV-SUMM- GENERAL NOTES.dwg

GENERAL NOTES:
TRAFFIC SIGNAL INSTALLATION

ITEM 686: TRAFFIC SIGNAL POLE ASSEMBLIES (STEEL)

PROVIDE ALL SIGNAL POLES FROM THE SAME MANUFACTURER.

USE MATERIALS FROM THE PREQUALIFIED MATERIAL PRODUCER LISTS AS SHOWN ON THE TEXAS DEPARTMENT OF TRANSPORTATION (TXDOT) – CONSTRUCTION DIVISION'S (CST) MATERIAL PRODUCER LIST. CATEGORY IS "ROADWAY ILLUMINATION AND ELECTRICAL SUPPLIES."

MARK POLE SHAFTS AND MAST ARMS WITH THE IDENTIFICATION NUMBERS FROM THE PLANS TO FACILITATE FIELD-ASSEMBLY. IDENTIFY POLE SHAFTS AND MAST ARMS BY INTERSECTION FOR PROJECTS WITH MULTIPLE INTERSECTIONS.

PROVIDE NUTS ON TOP AND BOTTOM (DOUBLE NUTS) OF THE BASE PLATE AS SHOWN ON THE PLANS.

SET ANCHOR BOLTS FOR MAST ARM SIGNAL POLES AND STRAIN POLES SO THAT TWO ARE IN TENSION AND TWO ARE IN COMPRESSION. OBTAIN APPROVAL OF ANCHOR BOLT PLACEMENT BEFORE PLACING CONCRETE.

USE THE TRAFFIC SIGNAL POLE HEIGHTS AND MAST ARM LENGTHS SHOWN ON THE PLANS AND IN THE MATERIAL SUMMARY FOR BIDDING PURPOSES ONLY. MAKE FIELD MEASUREMENTS TO DETERMINE THE ACTUAL POLE HEIGHT AND MAST ARM LENGTH REQUIRED. PROVIDE VERTICAL CLEARANCE OF 17 TO 19 FEET FROM THE ROADWAY TO THE LOWEST POINT OF THE SIGNAL HEAD OR MAST ARM. PLACE SIGNAL HEADS 40 FEET MINIMUM AND 180 FEET MAXIMUM FROM THE STOP LINE. IF THE NEAREST SIGNAL IS MORE THAN 180 FEET FROM THE STOP LINE, PLACE A SUPPLEMENTAL NEAR-SIDE SIGNAL HEAD. DETERMINE THE FIELD MEASUREMENTS AND ELEVATIONS FROM THE ACTUAL FIELD LOCATION OF THE POLES, CONSIDERING ALL ABOVE AND BELOW GROUND UTILITIES AND EXISTING ROADWAY ELEVATIONS.

PROVIDE VIBRATION DAMPERS FOR MAST ARMS 28 FEET LONG AND LONGER. USE DAMPERS 18"X48" FOR ARMS UP TO 48 FEET LONG, AND 16"X66" FOR LONGER MAST ARMS. INSTALL USING ASTRO-SIGN BRAC, SIGNFIX ALUMINUM CHANNEL, OR EQUAL, AT A MAXIMUM OF 3 FEET FROM THE END OF THE MAST ARM.

6025: RADAR PRESENCE DETECTION SYSTEM

THE CONTRACTOR SHALL FURNISH AND INSTALL THE WAVETRONIX™ RADAR DETECTION SYSTEM. THE CONTRACTOR SHALL INSTALL, AIM AND PROGRAM ALL DETECTORS (INCLUDING DETECTOR CABLE) AS SHOWN ON THE PLANS PER CITY DETAIL. THE CONTRACTOR SHALL REFER TO PLANS FOR RADAR DETECTION ZONES PLACEMENT. THE CONTRACTOR SHALL HAVE PREVIOUSLY COMPLETED INSTALLATION TRAINING PROVIDED BY THE RADAR DETECTION SYSTEM MANUFACTURER OR MAKE ARRANGEMENTS FOR THE MANUFACTURER TO INSTALL AND CALIBRATE THE SYSTEM.

A 4 CHANNEL BACK PLATE IS REQUIRED FOR PRESENCE DETECTION (RPDD).

6057: RADAR ADVANCED DETECTION SYSTEM

IF ADVANCED DETECTION (RADD) IS USED, A 6 CHANNEL BACK PLATE SHALL BE USED. ADVANCE DETECTION IS TO BE USED ON ROADWAYS WITH APPROACH SPEEDS OF 40 MPH OR GREATER.

ITEM 6058: BATTERY BACK-UP SYSTEM FOR SIGNAL CABINETS

THE BATTERY BACK-UP WILL BE INSTALLED WITH THE CONTROLLER ON THE CONCRETE PAD PAID FOR UNDER ITEM 680. IF A LARGER PAD IS NEEDED TO ACCOMMODATE THE BATTERY BACK-UP, THE ADDITIONAL LABOR AND MATERIAL WILL BE SUBSIDIARY TO THIS ITEM.

ITEM 6525: EMERGENCY VEHICLE TRAFFIC SIGNAL PRIORITY CONTROL SYSTEM

ITEM 6525 SHALL BE IN ACCORDANCE WITH TXDOT STANDARD SPECIFICATION.

8260: LED PEDESTRIAN SIGNAL MODULE

FURNISH AND INSTALL IN ALUMINUM HOUSING, LED "WALKING PERSON," AND "HAND" ICON PEDESTRIAN SIGNAL MODULES WITH COUNTDOWN FEATURE.

HOUSING FOR LED PEDESTRIAN SIGNAL MODULE SHALL BE PAID FOR UNDER ITEM 682 "VEHICLE AND PEDESTRIAN SIGNAL HEADS."

Freese and Nichols, Inc.
Texas Registered Engineering Firm F-2144
3-15-21
FREESE NICHOLS
2711 North Haskell Ave, Suite 3300
Dallas, Texas 75204
Phone: 972.235.7212
Web: www.freese.com

CITY OF MIDLAND, TX
ANDREWS HWY AT WOODCREST DR
CIVIL
GENERAL NOTES

NO.	ISSUE	BY	DATE

F&N JOB NO. M00201173
DATE 08/2020
DESIGNED MRF
DRAWN MRF
CHECKED NAH
FILE NAME CV-SUMM- GENERAL NOTES.dwg

VERIFY SCALE Bar is one inch on original drawing. If not one inch on this sheet, adjust scale.
0 1"

SHEET
SEQ. 4

ACAD Rel: 21.0s (LMS Tech)
Xrefnames: N:\IF\Drawings\8. Traffic\CV-SUMM- GENERAL NOTES.dwg
Last Saved: 3/7/2021 4:19 PM Saved By: 02480

Plot Date: 3/8/2021 6:51 PM Plot By: 02480 Filename: N:\IF\Drawings\8. Traffic\CV-SUMM- GENERAL NOTES.dwg

SUMMARY OF REMOVAL ITEMS

LOCATION	104	644	644
	REMOVING CONC (SIDEWALK OR RAMP)	REMOVE SM RD SN SUP&AM	RELOCATE SM RD SN SUP&AM
	SY	EA	EA
ANDREWS AT WOODCREST	50	2	1
PROJECT TOTALS	**50**	**2**	**1**

SUMMARY OF TRAFFIC SIGNAL ITEMS

LOCATION	416	416	618	618	618	618	620	620	621	624	628	680	682	682	682	682	682	682	682	682	682
	DRILL SHAFT (TRF SIG POLE) (30 IN)	DRILL SHAFT (TRF SIG POLE) (48 IN)	CONDT (PVC) (SCH 40) (2")	CONDT (PVC) (SCH 40) (3")	CONDT (PVC) (SCH 40) (3") (BORE)	CONDT (PVC) (SCH 40) (4")	ELEC CONDR (NO.6) BARE	ELEC CONDR (NO.6) INSULATED	TRAY CABLE (4 CONDR) (12 AWG)	GROUND BOX TY D (162922)W/APRON	ELC SRV TY D 120/240 060(NS)SS(E)PS(U)	INSTALL HWY TRF SIG (ISOLATED)	VEH SIG SEC (12")LED(GRN)	VEH SIG SEC (12")LED(GRN ARW)	VEH SIG SEC (12")LED(YEL)	VEH SIG SEC (12")LED(YEL ARW)	VEH SIG SEC (12")LED(RED)	VEH SIG SEC (12")LED(RED ARW)	PED SIG SEC (LED)(COUNTDOWN)	BACK PLATE (12")(3 SEC)(VENTED) ALUM	BACK PLATE (12")(4 SEC)(VENTED) ALUM
	LF	LF	LF	LF	LF	LF	LF	LF	LF	EA	EA	EA	EA	EA	EA	EA	EA	EA	EA	EA	EA
ANDREWS AT WOODCREST	12	66	13	112	387	6	464	14	697	4	1	1	8	5	8	8	8	6	6	6	5
PROJECT TOTALS	**12**	**66**	**13**	**112**	**387**	**6**	**464**	**14**	**697**	**4**	**1**	**1**	**8**	**5**	**8**	**8**	**8**	**6**	**6**	**6**	**5**

SUMMARY OF TRAFFIC SIGNAL ITEMS

LOCATION	684	684	684	684	684	686	686	686	686	687	688	688	6025	6025	6057	6057
	TRF SIG CBL (TY A)(14 AWG)(2 CONDR)	TRF SIG CBL (TY A)(14 AWG)(5 CONDR)	TRF SIG CBL (TY A)(14 AWG)(7 CONDR)	TRF SIG CBL (TY A)(14 AWG)(10 CONDR)	TRF SIG CBL (TY A)(14 AWG)(20 CONDR)	INS TRF SIG PL AM (S)1 ARM(20')ILSN	INS TRF SIG PL AM(S)1 ARM(50')ILSN	INS TRF SIG PL AM(S)1 ARM(50')LUM&I LSN	INS TRF SIG PL AM(S)1 ARM(55')LSN	PED POLE ASSEMBLY	PED DETECT PUSH BUTTON (APS)	PED DETECTOR CONTROLLER UNIT	RADAR PRESENCE DETECTOR	RADAR PRESENCE DETECTOR COMM CABLE	RADAR ADVANCED DETECTION DEVICE	RADAR ADVANCED DETECTOR COMM CABLE
	LF	LF	LF	LF	LF	EA	EA	EA	EA	EA	EA	EA	EA	LF	EA	LF
ANDREWS AT WOODCREST	654	380	240	199	464	1	1	1	1	1	6	1	4	564	2	113
PROJECT TOTALS	**654**	**380**	**240**	**199**	**464**	**1**	**1**	**1**	**1**	**1**	**6**	**1**	**4**	**564**	**2**	**113**

SUMMARY OF PAVEMENT MARKING ITEMS

LOCATION	666	666	666	666	666	666	677	678	678	678	678	678
	REFL PAV MRK TY I (W)4"(BRK)(100MIL)	REFL PAV MRK TY I (W)6"(SLD)(100MIL)	REFL PAV MRK TY I (W)24"(SLD)(100MIL)	REFL PAV MRK TY I (W)(ARROW)(100MIL)	REFL PAV MRK TY I (W)(WORD)(100MIL)	REFL PAV MRK TY I (Y)4"(SLD)(100MIL)	ELIM EXT PAV MRK & MRKS (4")	PAV SURF PREP FOR MRK (4")	PAV SURF PREP FOR MRK (8")	PAV SURF PREP FOR MRK (24")	PAV SURF PREP FOR MRK (ARROW)	PAV SURF PREP FOR MRK (WORD)
	LF	LF	LF	EA	EA	LF	LF	LF	LF	LF	EA	EA
ANDREWS AT WOODCREST	200	270	416	4	2	600	800	800	270	416	4	2
PROJECT TOTALS	**200**	**270**	**416**	**4**	**2**	**600**	**800**	**800**	**270**	**416**	**4**	**2**

SUMMARY OF ROADWAY ITEMS

LOCATION	531	531	529	110		247	310	340	340	3062	164	160
	CONC SIDEWALKS (4")	CURB RAMPS (TY 1)	CONC CURB & GUTTER (TY A)	EXCAVATION (ROADWAY)	COMPACTED SUBGRADE (8")	FLEXIBLE BASE (8")	PRIME COAT (MC-30 OR AEP)	HMAC Surface (Ty D)(PG70-22)(2")	HMAC Surface (Ty C)(PG70-22)(2")	TACK COAT	DRILL SEEDING	TOPSOIL (4")
	SY	EA	LF	CY	SY	SY	GAL	TON	TON	GAL	SY	SY
ANDREWS AT WOODCREST	45	4	181	1128	1628	1628	376	144	144	125	86	86
PROJECT TOTALS	45	4	181	1128	1628	1628	376	144	144	125	86	86

SUMMARY OF ADVANCE WARNING ITEMS

LOCATION	618	620	620	624	628	636	682	684	685
	CONDT (PVC) (SCH 40) (2") (BORE)	ELEC CONDR (NO.6) BARE	ELEC CONDR (NO.6) INSULATED	GROUND BOX TY B (122322)W/APRON	ELC SRV TY T 120/240 000(NS)GS(N)SP(O)	ALUMINUM SIGNS (TY A)	VEH SIG SEC (12")LED(YEL)	TRF SIG CBL (TY A)(14 AWG)(2 CONDR)	INSTALL RDSD FLASH BEACON ASSEMBLY
	LF	LF	LF	EA	EA	SF	EA	LF	EA
RFBA	450	450	900	4	1	9	2	20	1
PROJECT TOTALS	**450**	**450**	**900**	**4**	**1**	**9**	**2**	**20**	**1**

Freese and Nichols, Inc.
Texas Registered Engineering Firm F-2144
3-15-21
FREESE NICHOLS
2711 North Haskell Ave, Suite 3300
Dallas, Texas 75204
(214) 217-2200
Web — www.freese.com

CITY OF MIDLAND, TX
ANDREWS HWY AT WOODCREST DR
CIVIL
QUANTITIY SUMMARY

NO.	ISSUE	BY	DATE

F&N JOB NO. M0020173
DATE 08/2020
DESIGNED
DRAWN
REVISED
CHECKED
FILE NAME CV-SUMM-QTY.dwg

VERIFY SCALE Bar is one inch on original drawing. If not one inch on this sheet, adjust scale.
0 1"

SHEET
SEQ. 5

ACAD Rel: 21.0s (LMS Tech)
Attached: N:\IF\Drawings\8. Traffic\CV-SUMM-QTY.dwg
Last Saved: 3/8/2021 8:21 PM Saved By: 02480
Plot Date: 3/8/2021 8:31 PM Plot By: 02480 Filename: N:\IF\Drawings\8. Traffic\CV-SUMM-QTY.dwg

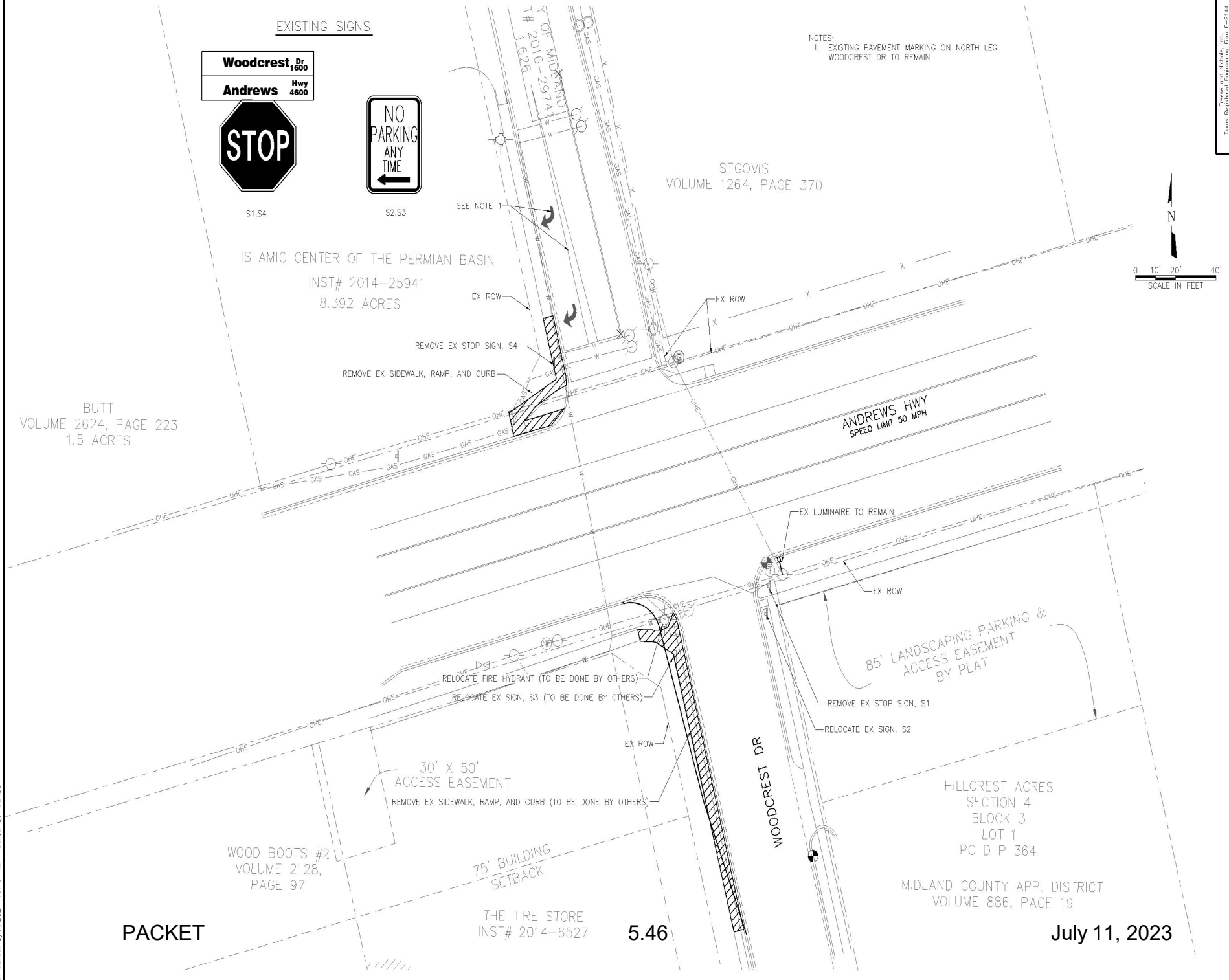

Freese and Nichols, Inc.
Texas Registered Engineering Firm F-2144
3-15-21

FREESE NICHOLS
2711 North Haskell Ave, Suite 3300
Dallas, Texas 75204
Phone: 214 217-2200
Web: www.freese.com

CITY OF MIDLAND, TX
ANDREWS HWY AT WOODCREST DR
CIVIL
EXISTING CONDITIONS

NO.	ISSUE	BY	DATE

F&N JOB NO. M00201173
DATE 08/2020
DESIGNED MRF
DRAWN MRF
REVISED
CHECKED NAH
FILE NAME cv-trt-pl-exlayout.dwg

VERIFY SCALE Bar is one inch on original drawing. If not one inch on this sheet, adjust scale.
0 1"

SHEET
SEQ. 6

ACAD Rel: 21.0s (LMS Tech)
Ethernet: \\Drawings\8. Traffic\cv-trt-pl-exlayout.dwg
Last Saved: 3/7/2021 10:19 PM Saved By: 02480

Plot Date: 3/8/2021 6:53 PM Plot By: 02480 Filename: N:\IF\Drawings\8. Traffic\cv-trt-pl-exlayout.dwg

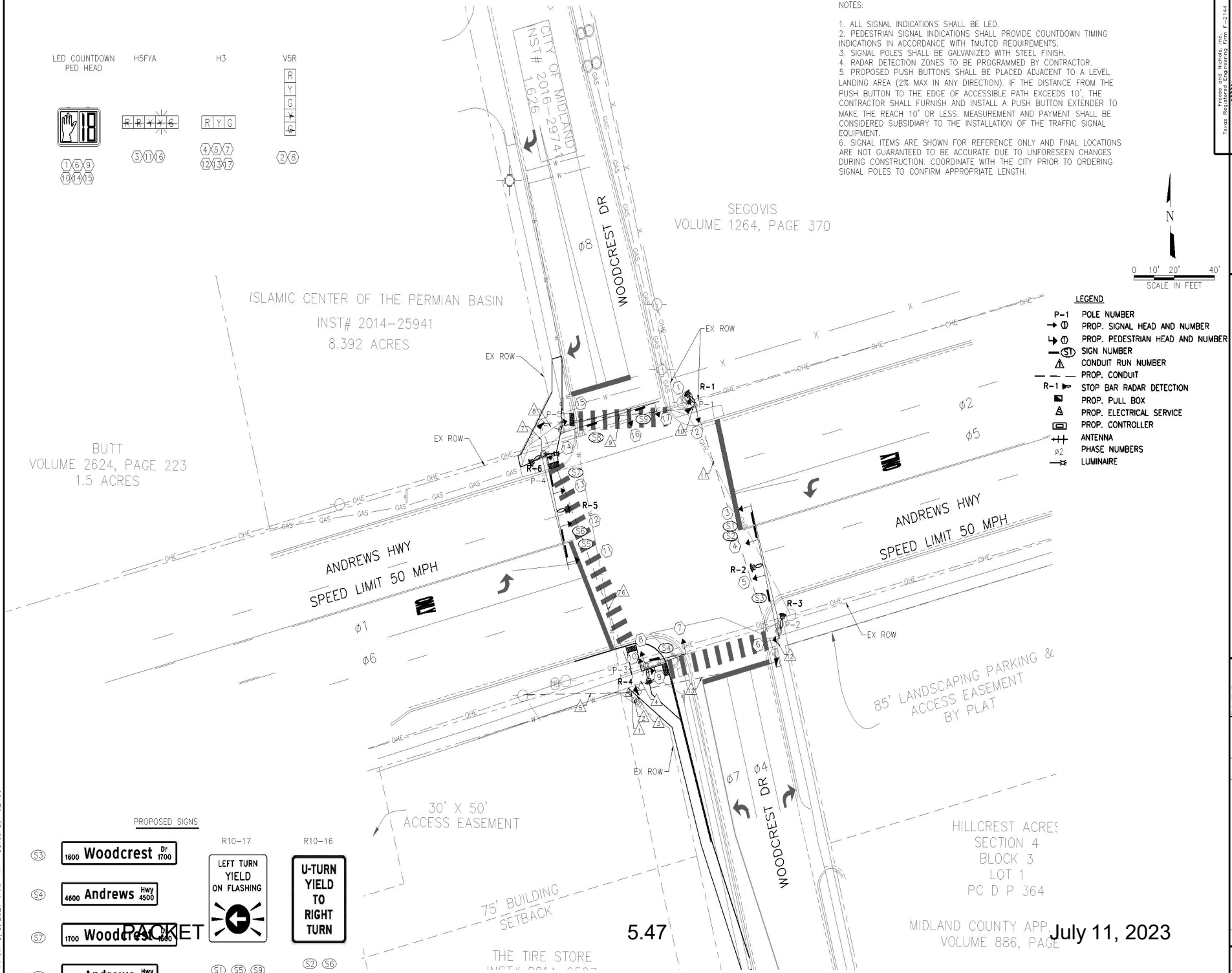

Freese and Nichols, Inc. Texas Registered Engineering Firm F-2144

3-15-21

FREESE NICHOLS

2711 North Haskell Ave, Suite 3300 Dallas, Texas 75204 Phone: 214-217-2200 Web: www.freese.com

CITY OF MIDLAND, TX

ANDREWS HWY AT WOODCREST DR

CIVIL

PROPOSED LAYOUT

NO.	ISSUE	BY	DATE

F&N JOB NO. M00201173
DATE 08/2020
DESIGNED MRF
DRAWN MRF
REVISED
CHECKED NAH
FILE NAME cv-trt-proplayout_pvmrk.dwg

VERIFY SCALE Bar is one inch on original drawing. If not one inch on this sheet, adjust scale.
0 1"

SHEET

SEQ. 7

ACAD Rel: 21.0s (LMS Tech)
File Name: N:\IF\Drawings\8. Traffic\cv-trt-proplayout_pvmrk.dwg
Last Saved: 3/8/2021 5:32 PM Saved By: 02480

Plot Date: 3/8/2021 6:54 PM Plot By: 02480 Filename: N:\IF\Drawings\8. Traffic\cv-trt-proplayout_pvmrk.dwg

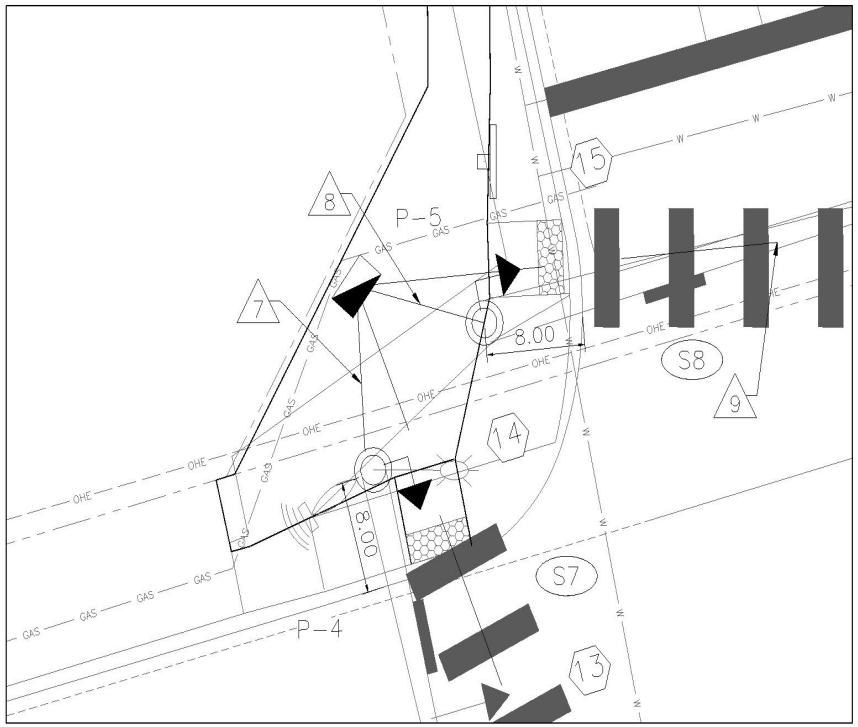

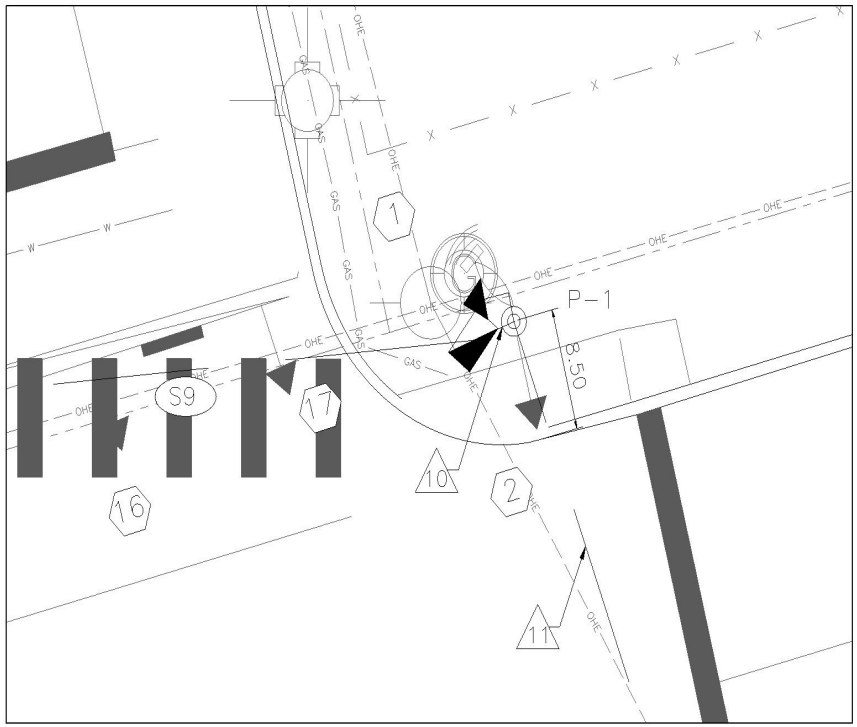

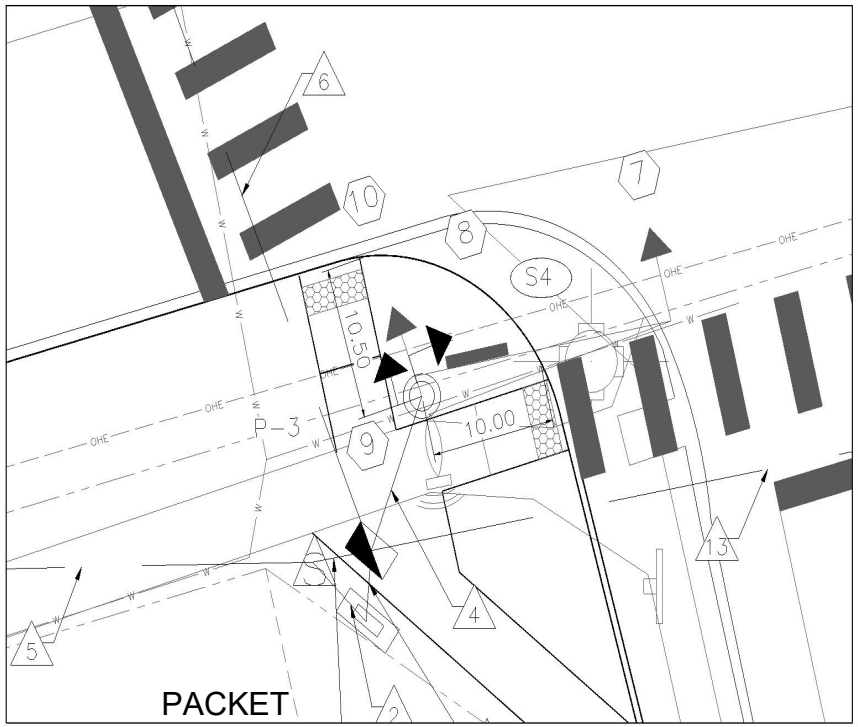

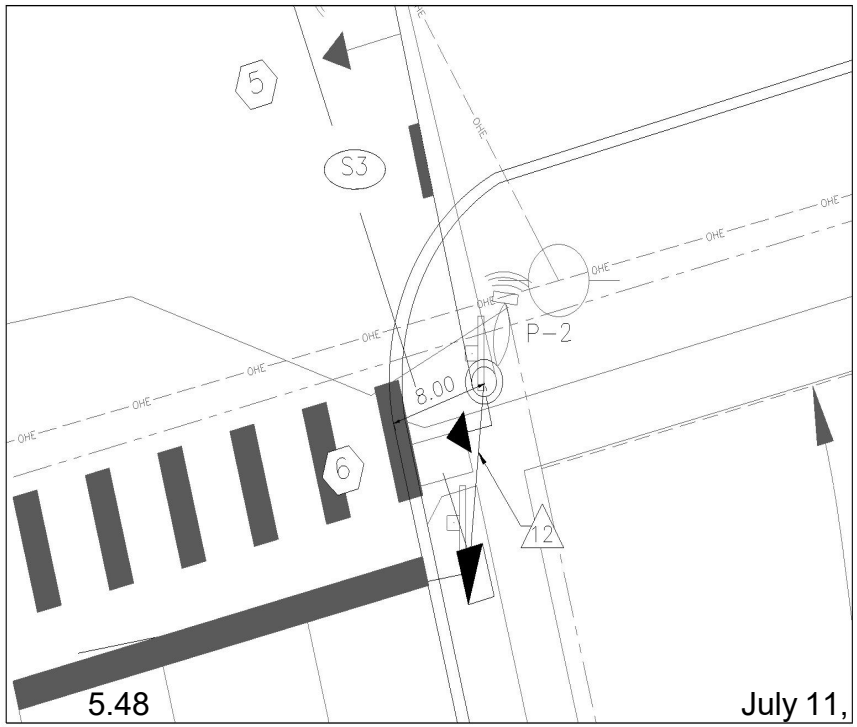

N

0 5' 10'
SCALE IN FEET

Freese and Nichols, Inc.
Texas Registered Engineering Firm F-2144

3-15-21

FREESE NICHOLS

2711 North Haskell Ave, Suite 3300
Dallas, Texas 75204
Phone: 214-217-2200
Web: www.freese.com

CITY OF MIDLAND, TX

ANDREWS HWY AT WOODCREST DR

CIVIL

CORNER DETAILS

NO.	ISSUE	BY	DATE

F&N JOB NO. M0020173
DATE 08/2020
DESIGNED MRF
DRAWN MRF
REVISED
CHECKED NAH
FILE NAME cv-trt-pl-proplayout-ramps.dwg

VERIFY SCALE Bar is one inch on original drawing. If not one inch on this sheet, adjust scale.
0 1"

SHEET

SEQ. 8

ACAD Rel: 21.0s (LMS Tech)
File name: N:\IF\Drawings\8. Traffic\cv-trt-pl-proplayout-ramps.dwg
Last Saved: 10/29/2020 3:38 PM Saved By: 02480

Plot Date: 3/8/2021 6:55 PM Plot By: 02480 Filename: N:\IF\Drawings\8. Traffic\cv-trt-pl-proplayout-ramps.dwg

SIGNAL POLE CHART																	
SPAN	P-1		P-2				P-3				P-4				P-5		
MAST ARM LENGTH	PED		55'				20'				50'				50'		
FOUNDATION TYPE	24-A		48-A				30-A				48-A				48-A		
LUMINAIRES	NO		NO				NO				YES				NO		
SIZE OF LENS			12"				12"				12"				12"		
SIGNAL HEAD NO.	1	2	3	4	5	6	7	8	9	10	11	12	13	14	15	16	17
SIGNAL TYPE	P	V5R	H5FYA	H3	H3	P	H3	V5R	P	P	H5FYA	H3	H3	P	P	H5FYA	H3
12" LED SIGNAL FACE INDICATIONS	DW	R	←R	R	R	DW	R	R	DW	DW	←R	R	R	DW	DW	←R	R
	W	Y	←R	Y	Y	W	Y	Y	W	W	←R	Y	Y	W	W	←R	Y
		G	←Y	G	G		G	G			←Y	G	G			←Y	G
		Y→	←FY					Y→			←FY					←FY	
		G→	←G					G→			←G					←G	

LED SIGNAL HEAD DETAILS			
SIG HEAD NO.	SIG HEAD TYPE	VEH SIG SECTION	PED SIG SECTION
		EA	EA
1	143C		1
2	V5R	5	
3	H5FYA	5	
4	H3	3	
5	H3	3	
6	143C		1
7	H3	3	
8	V5R	5	
9	143C		1
10	143C		1
11	H5FYA	5	
12	H3	3	
13	H3	3	
14	143C		1
15	143C		1
16	H5FYA	5	
17	H3	3	
TOTAL (EA)		43	6

ELECTRICAL SERVICE DETAILS										
ELECTRICAL SERVICE NO.	SHEET NO.	ELECTRICAL SERVICE DESCRIPTION (SEE ED(4) AND ED(5)-03	SERVICE CONDUIT SIZE (RMC)	SERVICE CONDUCTORS NO./SIZE	SAFETY SWITCH AMPS	MAINCIRCUIT BREAKER POLE/AMP	TWO-POLE CONTACTOR AMPS	PANELBD./ LOADCENTER AMP RATING	CIRCUIT NO.	BRANCH CIRCUIT BREAKER POLE/AMPS	KVA LOAD
1	-	ELEC SERV TY D(120/240)060(NS)AL(E)PS(U)	1-1/2"	3/#6	N/A	2P/60	N/A	70	A B	1P/50 2P/20	5.8

CONDUIT RUN SUMMARY													
RUN NO.	RUN LENGTH	2" PVC TRENCH (LF)	3" PVC TRENCH (LF)	3" PVC BORE (LF)	4" PVC TRENCH (LF)	ELECTRICAL CONDUCTORS NO.6 BARE (EA)	ELECTRICAL CONDUCTORS NO.6 XHHW (EA)	ILLUMINATION AND ILSN TRAY CABLE 4 CNDR NO. 12 (EA)	APS CABLE (TY-A, 14 AWG) 2 CNDR CABLE	SIGNAL CABLE (TY-A, 14 AWG) 10 CNDR CABLE (EA)	SIGNAL CABLE (TY-A, 14 AWG) 20 CNDR CABLE (EA)	STOPLINE DETECTION WAVETRONIX CABLE	ADVANCE DETECTION WAVETRONIX CABLE
1	6	1				1		5					
2	7	1				1	2						
3	6				1	1			6	1	4	4	2
4	13		1			1		1	2		1	1	
5	54		1										
6	123			1		1		3	3		2	2	1
7	13		1			1		2	1		1	1	1
8	12		1			1		1	1				
9	76			1		1			1		1	1	
10	5		1			1			1	1	1	1	
11	116			1		1				1			
12	15		1			1		1	1		1	1	1
13	72			1		1		1	1	1	1	1	1
TOTAL (LF)		13	112	387	6	464	14	537	624	199	464	464	235

NOTE: THIS CHART DOES NOT REFLECT THE QUANTITIES OF CABLE INSIDE THE POLES.

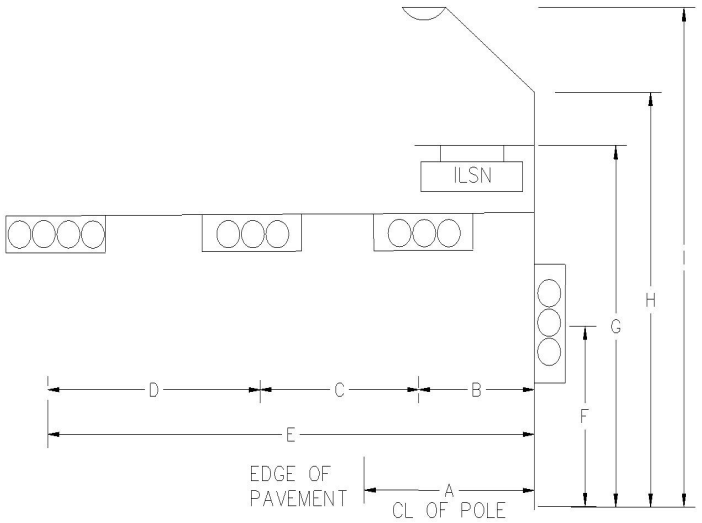

CABLE INSIDE POLE						
	ILLUMINATION AND ILSN	PUSH BUTTON CABLE	SIGNAL CABLE (TY-A, 14 AWG)		STOPLINE DETECTION	ADVANCE DETECTION
	TRAY CABLE 4 CNDR NO. 12	2 CNDR CABLE	5 CNDR CABLE	7 CNDR CABLE	WAVETRONIX CABLE	WAVETRONIX CABLE
P-1		5	10	15		
P-2	30	5	120	75	25	45
P-3	30	10	60	20	25	
P-4	70	5	110	70	25	45
P-5	30	5	80	60	25	
TOTAL	160	30	380	240	100	90

LED LAMP DETAILS							
POLE	RED	YELLOW	GREEN	RED ARROW	YELLOW ARROW	GREEN ARROW	LED PED SIG LAMP
P-1	1	1	1		1	1	1
P-2	2	2	2	2	2	1	1
P-3	2	2	2		1	1	2
P-4	2	2	2	2	2	1	1
P-5	1	1	1	2	2	1	1
TOTAL	8	8	8	6	8	5	6

TRAFFIC SIGNAL POLE ASSEMBLIES																
POLE NUMBER	SIGNAL HEAD AND POLE PLACEMENT									NO. OF HEADS (EA) *	LUM (Y/N)	ILSN (Y/N)	RADAR DET. (EA)	DR. SHAFT LENGTH (FT)			FDN. TYPE
	A (FT)	B (FT)	C (FT)	D (FT)	E (FT)	F (FT)	G (FT)	H (FT)	I (FT)					24" DIA	36" DIA	48" DIA	
P-1	13	15' PEDESTRIAN PUSH BUTTON POLE				13	-	15	-	-	-		1	6			24-A
P-2	12	24	16	15	55	-	23.5	24	-	3	N	Y	2			22	48-A
P-3	10	20	-	-	20	13	23.5	24	-	1	N	Y	1		14		36-A
P-4	8	16	**	**	50	-	23.5	30	35	3	Y	Y	2			22	48-A
P-5	8	16	**	**	50	-	23.5	24	-	2	N	Y	-			22	48-A

*DOES NOT INCLUDE VERTICAL SIDEMOUNT SIGNAL HEADS OR PEDESTRIAN SIGNAL HEADS
** MOUNT PEDESTRIAN HEADS AT A HEIGHT OF 8 FEET ABOVE SIDEWALK

GROUND BOX QUANTITIES	
TYPE D W/APRON	4

PACKET

Freese and Nichols, Inc.
Texas Registered Engineering Firm F-2144
3-15-21

FREESE NICHOLS
2711 North Haskell Ave, Suite 3300
Dallas, Texas 75204
(214) 217-2200
Web: www.freese.com

CITY OF MIDLAND, TX
ANDREWS HWY AT WOODCREST DR
CIVIL
TRAFFIC SIGNAL SUMMARY 1 OF 2

F&N JOB NO. M0020173
DATE 08/2020
DESIGNED MRF
DRAWN MRF
REVISED -
CHECKED NAH
FILE NAME CV-SUMM-TRAFSIGNAL.dwg

NO. ISSUE BY DATE

VERIFY SCALE Bar is one inch on original drawing. If not one inch on this sheet, adjust scale.
0 1"

SHEET
SEQ. 9

ACAD Rel: 21.0s (LMS Tech)
File Name: N:\IF\Drawings\8. Traffic\CV-SUMM-TRAFSIGNAL.dwg
Last Saved: 3/7/2021 9:03 PM Saved By: 02480

Plot Date: 3/8/2021 6:56 PM Plot By: 02480 Filename: N:\IF\Drawings\8. Traffic\CV-SUMM-TRAFSIGNAL.dwg

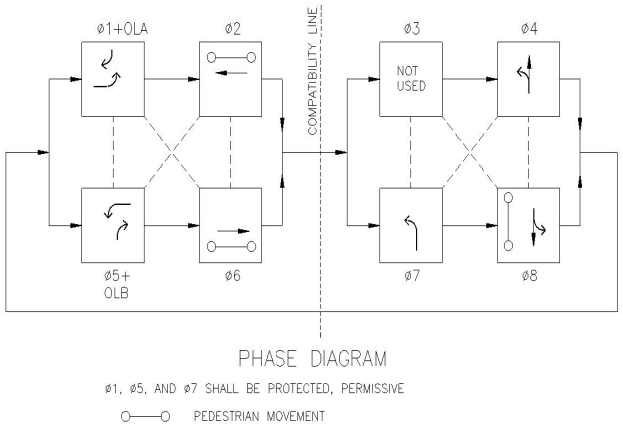

PHASE DIAGRAM

ø1, ø5, AND ø7 SHALL BE PROTECTED, PERMISSIVE

PEDESTRIAN MOVEMENT

SIGN LEGEND	SIGN TYPE	SIGN DIMENSIONS	TEXT	STATUS	MOUNT TYPE
S1	R10-17	30"X36"	LT YIELD ON FLA YEL ARW	INSTALL	P-2 MAST ARM
S2	R10-16	30"X36"	U TURN YIELD TO RIGHT TURN	INSTALL	P-2 MAST ARM
S3	ILSN	18"X96"	WOODCREST	INSTALL	P-2 MAST ARM
S4	ILSN	18"X96"	ANDREWS	INSTALL	P-3 MAST ARM
S5	R10-17	30"X36"	LT YIELD ON FLA YEL ARW	INSTALL	P-4 MAST ARM
S6	R10-16	30"X36"	U TURN YIELD TO RIGHT TURN	INSTALL	P-4 MAST ARM
S7	ILSN	18"X96"	WOODCREST	INSTALL	P-4 MAST ARM
S8	ILSN	18"X96"	ANDREWS	INSTALL	P-5 MAST ARM
S9	R10-17	30"X36"	LT YIELD ON FLA YEL ARW	INSTALL	P-5 MAST ARM

RADAR DETECTOR	MOUNTING LOCATION	MOUNTING HEIGHT	ZONE LOCATION	SETBACK DISTANCE	ZONE
R-1	P-1 POLE	19'	STOP BAR	N/A	ø4
R-2	P-2 MAST ARM	19'	ADVANCED	320'	ø5
					ø2
R-3	P-2 POLE	19'	STOP BAR	N/A	ø1
					ø6
R-4	P-3 POLE	19'	STOP BAR	N/A	ø3
					ø8
R-5	P-4 MAST ARM	19'	ADVANCED	320'	ø1
					ø6
R-6	P-4 POLE	19'	STOP BAR	N/A	ø5
					ø2

MINIMUM PEDESTRIAN TIMING			
PHASE	WALK	FLASHING DON'T WALK	TOTAL
ø2	7	26	33
ø4	7	23	30
ø8	7	23	30

NOTE:

1. ILSN SIGNS TO BE SUPPLIED BY THE CITY AND INSTALLED BY THE CONTRACTOR.

2. R10-17 SIGNS TO BE SUPPLIED BY THE CITY AND INSTALLED BY THE CONTRACTOR

S1,S5,S9

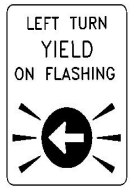

R10-17
30"X36"

S2,S6



R10-16
30"X36"

CABLE TERMINATION CHART						
CNDR NO.	CNDR. COLOR	CABLE 1 FROM CNTRL TO TO POLE P-1	CABLE 2 FROM CNTRL TO TO POLE P-2	CABLE 3 FROM CNTRL TO TO POLE P-3	CABLE 4 FROM CNTRL TO TO POLE P-4	CABLE 5 FROM CNTRL TO TO POLE P-5
1	BLACK	SPARE	SPARE	SPARE	SPARE	SPARE
2	WHITE	SH COM	SH COM	SH COM	SH COM	SH COM
3	RED	SH 2 ø4 R	SH 4,5 ø2 R	SH 7,8 ø4 R	SH 12,13 ø2 R	SPARE
4	GREEN	SH 2 ø4 G	SH 4,5 ø2 G	SH 7,8 ø4 G	SH 12,13 ø2 G	SPARE
5	ORANGE	SH 2 ø4 Y	SH 4,5 ø2 Y	SH 7,8 ø4 Y	SH 12,13 ø2 Y	SPARE
6	BLUE	SH 1-ø2 DW	SH 6-ø6 DW	SH 9-ø6 DW	SH 14-ø4 DW	SH 15-ø2 DW
7	WHITE/BLACK	SH 1-ø2 W	SH 6-ø6 W	SH 9-ø6 W	SH 14-ø4 W	SH 15-ø2 W
8	RED/BLACK	SPARE	SPARE	SH 10-ø4 DW	SPARE	SPARE
9	GREEN/BLACK	SPARE	SPARE	SH 10-ø4 W	SPARE	SPARE
10	ORANGE/BLACK	SPARE	SPARE	SPARE	SPARE	SPARE
11	BLUE/BLACK	SPARE	SPARE	SPARE	SPARE	
12	BLACK/WHITE	SPARE	SPARE	SPARE	SPARE	
13	RED/WHITE	SH 2 OLA R (RT ARW)	SH 3 OLC R (LT ARW)	SH 8 OLB R (RT ARW)	SH 11 OLD R (LT ARW)	
14	GREEN/WHITE	SH 2 OLA G (RT ARW)	SH 3 ø1 G (LT ARW)	SH 8 OLB G (RT ARW)	SH 11 OLD R (LT ARW)	
15	BLUE/WHITE	SPARE	SH 3 ø1 Y (LT ARW)	SPARE	SH 11 ø5 G (LT ARW)	
16	BLACK/RED	SPARE	SPARE	SPARE	SH 11 ø5 Y (LT ARW)	
17	WHITE/RED	SPARE	SPARE	SPARE	SPARE	
18	ORANGE/RED	SPARE	SH 3 OLC FY (LT ARW)	SPARE	SH 11 OLD FY (LT ARW)	
19	BLUE/RED	SPARE	SPARE	SPARE	SPARE	
20	RED/GREEN	SPARE	SPARE	SPARE	SPARE	

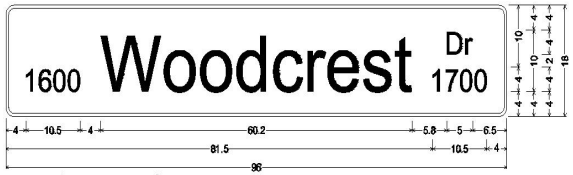

1.5" Radius, 0.5" Border, White on Green;
"1600" ClearviewHwy-3-W; "Woodcrest" ClearviewHwy-3-W; "Dr" ClearviewHwy-3-W; "1700" ClearviewHwy-3-W;

S3 (ILSN)
96"X18"

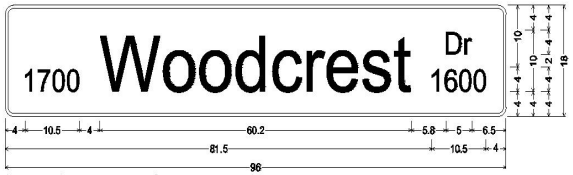

1.5" Radius, 0.5" Border, White on Green;
"1700" ClearviewHwy-3-W; "Woodcrest" ClearviewHwy-3-W; "Dr" ClearviewHwy-3-W; "1600" ClearviewHwy-3-W;

S4 (ILSN)
96"X18"

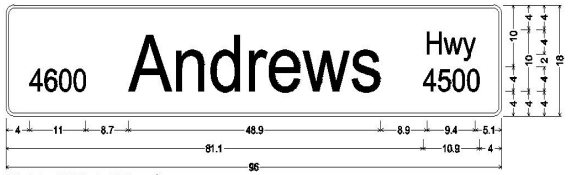

1.5" Radius, 0.5" Border, White on Green;
"4600" ClearviewHwy-3-W; "Andrews" ClearviewHwy-3-W; "Hwy" ClearviewHwy-3-W; "4500" ClearviewHwy-3-W;

S7 (ILSN)
96"X18"

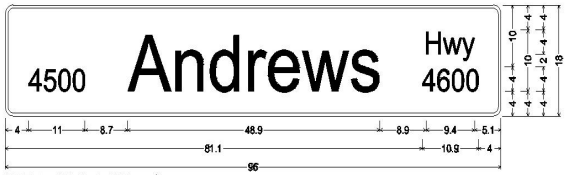

1.5" Radius, 0.5" Border, White on Green;
"4500" ClearviewHwy-3-W; "Andrews" ClearviewHwy-3-W; "Hwy" ClearviewHwy-3-W; "4600" ClearviewHwy-3-W;

S8 (ILSN)
96"X18"

PACKET 5.50 July 11, 2023

Freese and Nichols, Inc.
Texas Registered Engineering Firm F-2144

3-15-21

FREESE NICHOLS
2711 North Haskell Ave, Suite 3300
Dallas, Texas 75204
Phone: 214-217-2200
Web: www.freese.com

CITY OF MIDLAND, TX

ANDREWS HWY AT WOODCREST DR

CIVIL

TRAFFIC SIGNAL SUMMARY 2 OF 2

NO.	ISSUE	BY	DATE

F&N JOB NO. M00201173
DATE 08/2020
DESIGNED MRF
DRAWN MRF
REVISED -
CHECKED NAH
FILE NAME CV-SUMM-SIGNS AND PVMRK.dwg

VERIFY SCALE Bar is one inch on original drawing. If not one inch on this sheet, adjust scale.
0 1"

SHEET

SEQ. 10

ACAD Rel: 21.0S (LMS Tech)
Fonts: Lucida Console
Last Saved: 3/10/2021 10:33 AM Saved By: chm

Plot Date: 3/10/2021 10:34 AM Plot By: chm Filename: N:\IF\Drawings\8. Traffic\CV-SUMM-SIGNS AND PVMRK.dwg

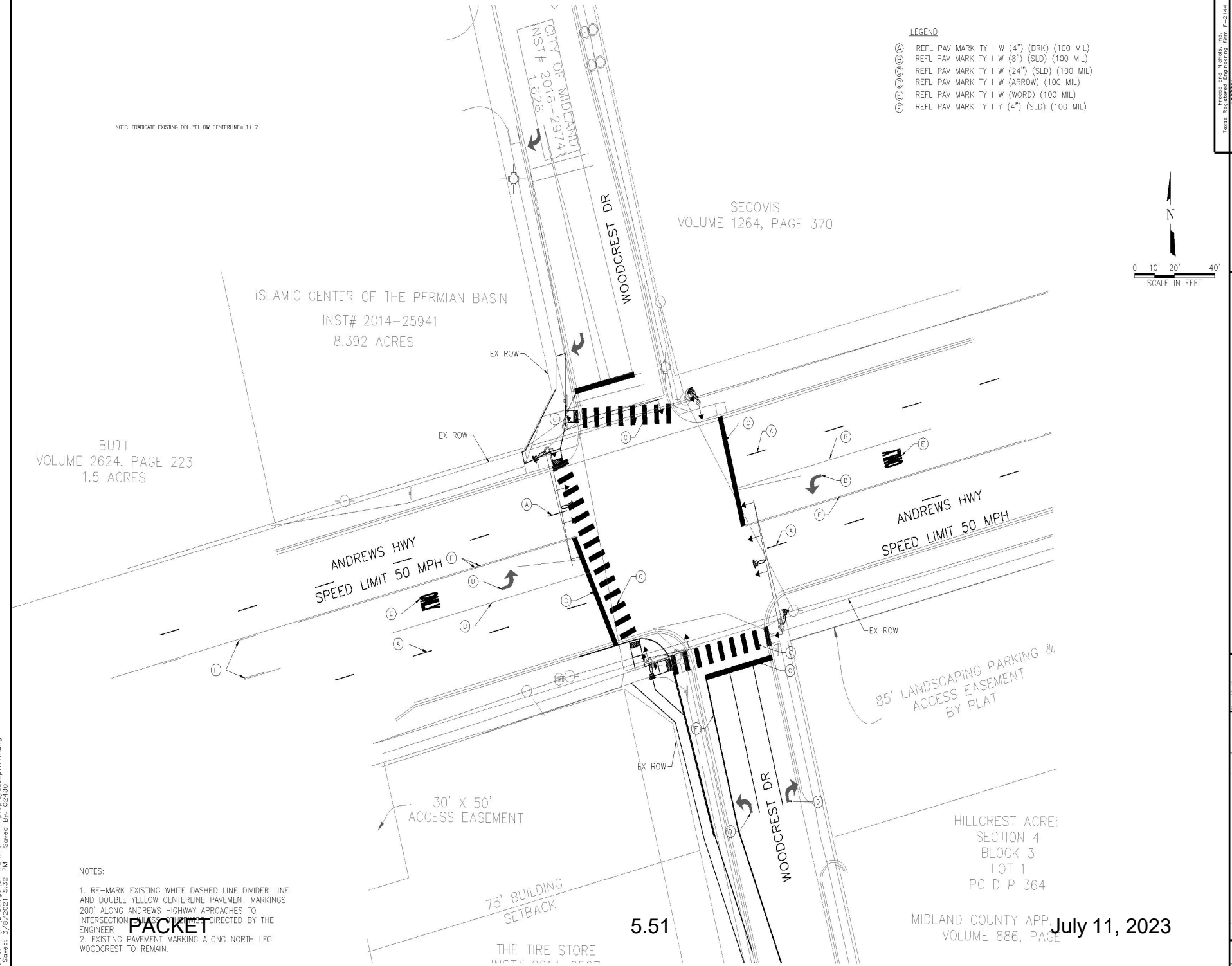

NOTES:

1. RE-MARK EXISTING WHITE DASHED LINE DIVIDER LINE AND DOUBLE YELLOW CENTERLINE PAVEMENT MARKINGS 200' ALONG ANDREWS HIGHWAY APROACHES TO INTERSECTION UNLESS OTHERWISE DIRECTED BY THE ENGINEER
2. EXISTING PAVEMENT MARKING ALONG NORTH LEG WOODCREST TO REMAIN.

Freese and Nichols, Inc.
Texas Registered Engineering Firm F-2144

3-15-21

FREESE NICHOLS

2711 North Haskell Ave, Suite 3300
Dallas, Texas 75204
Phone: 214.217.2200
Web: www.freese.com

CITY OF MIDLAND, TX

ANDREWS HWY AT WOODCREST DR

CIVIL

PAVEMENT MARKING

NO.	ISSUE	BY	DATE

F&N JOB NO. M20201.73
DATE 08/2020
DESIGNED MRF
DRAWN MRF
REVISED
CHECKED NAH
FILE NAME cv-trt-proplayout_pvmrk.dwg

VERIFY SCALE Bar is one inch on original drawing. If not one inch on this sheet, adjust scale.
0 1"

SHEET

SEQ. 11

ACAD Rel: 21.0s (LMS Tech)
File Name: N:\IF\Drawings\8. Traffic\cv-trt-proplayout_pvmrk.dwg
Last Saved: 3/8/2021 5:32 PM Saved By: 02480
Plot Date: 3/8/2021 6:58 PM Plot By: 02480 Filename: N:\IF\Drawings\8. Traffic\cv-trt-proplayout_pvmrk.dwg



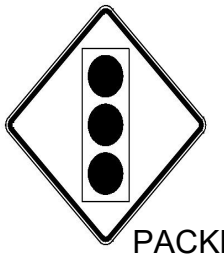

48"x48"
W3-3
S1

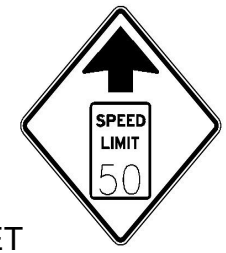

36"x36"
W3-5
S2 (EXISTING)



36"x36"
W4-1R
S3 (EXISTING)

RFBA QUANTITIES		
	UNIT	QTY
RFBA	EA	1
2" CONDUIT (BORE)	LF	450
ELEC. COND (NO. 6) BARE	LF	450
ELEC. COND (NO. 6) INSULATED	LF	900
GROUND BOX (TY B)	EA	4
ELEC. SERV TY D	EA	1
ALUMINUM SIGNS (TY A)	SF	9
VEH SIG SEC (12") LED (YEL)	EA	2
TRF SIG CBL (TY A) (14 AWG) 2 CNDR	LF	20

NOTES:
1. RUN 2" CONDUIT FROM RFBA TO ELECTRICAL SERVICE
2. SEE TXDOT DETAIL RFBA-13 FOR MORE INFORMATION

ELECTRICAL SERVICE DETAILS										
ELECTRICAL SERVICE NO.	SHEET NO.	ELECTRICAL SERVICE TYPE (SEE ED(4) AND ED(5)-03	SERVICE CONDUIT SIZE (RMC)	SERVICE CONDUCTORS NO./SIZE	SAFETY SWITCH AMPS	MAINCIRCUIT BREAKER POLE/AMP	TWO-POLE CONTACTOR AMPS	PANELBD./ LOADCENTER AMP RATING	CIRCUIT NO.	BRANCH CIRCUIT BREAKER POLE/AMPS	LOAD
1	-	ELEC SERV TY T(120/240)000(NS)GS(N)SP(O)	1-1/4"	3/#6	N/A	N/A	N/A	70	A	1P/20	0.5

PACKET 552 July 11, 2023

Freese and Nichols, Inc.
Texas Registered Engineering Firm F-2144
3-15-21

FREESE NICHOLS
2711 North Haskell Ave, Suite 3300
Dallas, Texas 75204
Phone: 214-217-2200
Web: www.freese.com

CITY OF MIDLAND, TX
ANDREWS HWY AT WOODCREST DR
CIVIL
ADVANCE WARNING

NO.	ISSUE	BY	DATE

F&N JOB NO. M00201173
DATE 08/2020
DESIGNED MRF
DRAWN MRF
REVISED -
CHECKED NAH
FILE NAME cv-trt-pl-advance_warning.dwg

VERIFY SCALE Bar is one inch on original drawing. If not one inch on this sheet, adjust scale.
0 1"

SHEET
SEQ. 12

ACAD Rel: 21.0s (LMS Tech)
File Name: N:\IF\Drawings\8. Traffic\cv-trt-pl-advance_warning.dwg
Last Saved: 10/28/2020 9:25 PM Saved By: 02480

Plot Date: 3/8/2021 6:59 PM Plot By: 02480 Filename: N:\IF\Drawings\8. Traffic\cv-trt-pl-advance_warning.dwg

DISCLAIMER:
The use of this standard is governed by the "Texas Engineering Practice Act". No warranty of any kind is made by TxDOT for any purpose whatsoever. TxDOT assumes no responsibility for the conversion of this standard to other formats or for incorrect results or damages resulting from its use.

DATE:
FILE:

ARM SIZE D_1	ARM SIZE ϕ	A	B	C	D	E	CONN BOLT DIA
in.	in.	in.	in.	in.	in.	in.	in.
6.5	.179	12	9	9	6	1 3/4	1
7.5	.179	13	9	10	6	1 3/4	1
8.0	.179	14	10	11	7	2	1 1/4
9.0	.179	16	11	13	8	2	1 1/4
9.5	.179	17	12	14	9	2	1 1/4
9.5	.239	18	12	15	9	2	1 1/4
10.0	.239	18	12	15	9	2	1 1/4
10.5	.239	18	13	15	10	3	1 1/2
11.0	.239	18	13	15	10	3	1 1/2

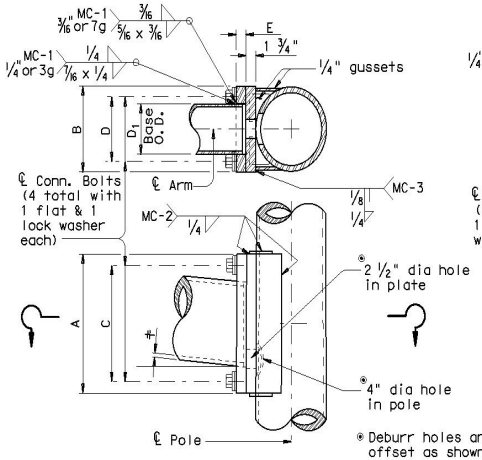

FIXED MOUNT DETAIL 1

ARM SIZE D_1	ARM SIZE ϕ	A	B	C	D	E	CONN BOLT DIA
in.	in.	in.	in.	in.	in.	in.	in.
7.0	.179	11	11	8	8	1 3/4	1 1/4
7.5	.179	11	11	8	8	1 3/4	1 1/4
8.0	.179	11	11	8	8	2	1 1/4
9.0	.179	13	13	10	10	2	1 1/4
10.0	.179	13	13	10	10	2	1 1/4
9.5	.239	13	13	10	10	2	1 1/4
10.0	.239	14	14	11	11	2	1 1/2
11.0	.239	14	14	11	11	3	1 1/2
11.5	.239	14	14	11	11	3	1 1/2

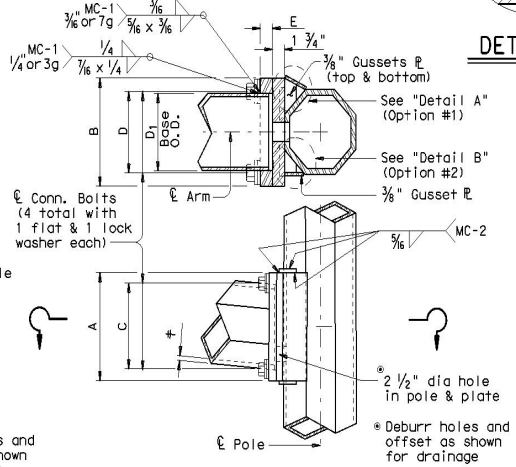

FIXED MOUNT DETAIL 2

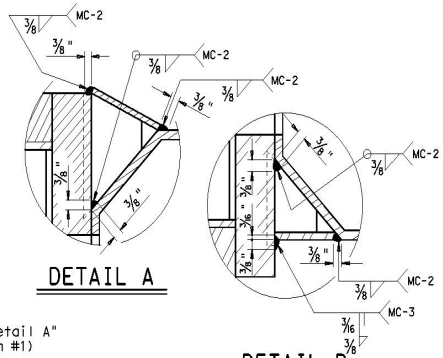

DETAIL A

DETAIL B

MATERIALS	
Round Shafts or Polygonal Shafts ①	ASTM A595 Gr.A, A588, A1008 HSLAS Gr.50 Class 2, A1011 HSLAS Gr.50 Class 2, A572 Gr.50 or A1011 SS Gr.50 ②
Plates ①	ASTM A36, A588, or A572 Gr.50
Connection Bolts	ASTM A325 or A449, except where noted
Pin Bolts	ASTM A325
Pipe ①	ASTM A53 Gr.B, A501, A1008 HSLAS-F Gr.50, A1011 HSLAS-F Gr.50
Misc. Hardware	Galvanized steel or stainless steel or as noted

① ASTM A572, A1008 HSLAS, A1011 HSLAS, A1008 HSLAS-F, A1011 HSLAS-F or A1011 SS may have higher yield strengths but shall not have less elongation than the grade indicated.

② ASTM A1011 SS Gr.50 material shall also have a minimum elongation of 18 percent in 8 inches or 23 percent in 2 inches. Material thickness in excess of those stipulated under A1011 SS will be acceptable providing the material meets all other A1011 SS requirements and the requirements of this item.

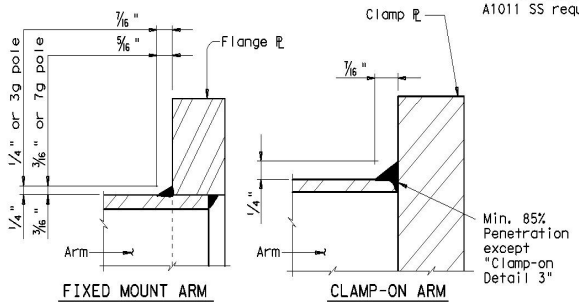

FIXED MOUNT ARM

CLAMP-ON ARM

ARM BASE WELD DETAILS

ARM SIZE D_1	ARM SIZE ϕ	A	F	CONN. BOLTS No.	CONN. BOLTS Dia	PIN BOLTS No.	PIN BOLTS Dia
in.	in.	in.	in.	ea.	in.	ea.	in.
6.5	.179	12	6	4	1	2	5/8
7.5	.179	14	8	4	1	2	5/8
8.0	.179	14	8	4	1	2	5/8
9.0	.179	16	10	4	1	2	5/8
9.5	.179	18	12	4	1 1/4	3	5/8
9.5	.239	18	12	4	1 1/4	3	5/8
10.0	.239	18	12	4	1 1/4	3	5/8

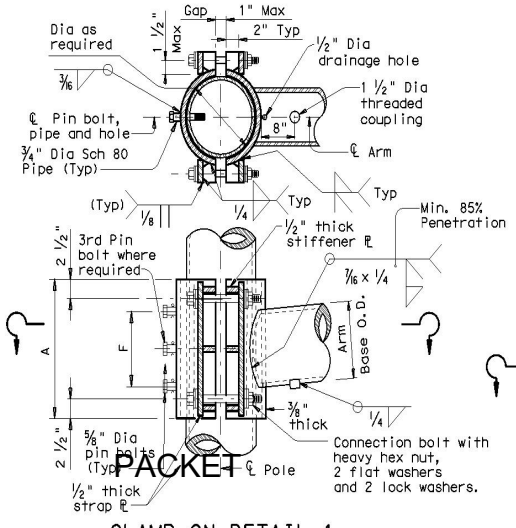

CLAMP-ON DETAIL 1

ARM SIZE D_1	ARM SIZE ϕ	A	F	T	CONN. BOLTS No.	CONN. BOLTS Dia	PIN BOLTS No.	PIN BOLTS Dia
in.	in.	in.	in.	in.	ea.	in.	ea.	in.
7.0	.179	12	6	3/4	4	3/4	2	5/8
7.5	.179	14	8	3/4	4	3/4	2	5/8
8.0	.179	14	8	3/4	4	3/4	2	5/8
9.0	.179	16	10	7/8	4	1	2	5/8
10.0	.179	18	10	7/8	4	1	2	5/8
9.5	.239	18	10	1	6	1	3	5/8
10.0	.239	18	10	1	6	1	3	5/8

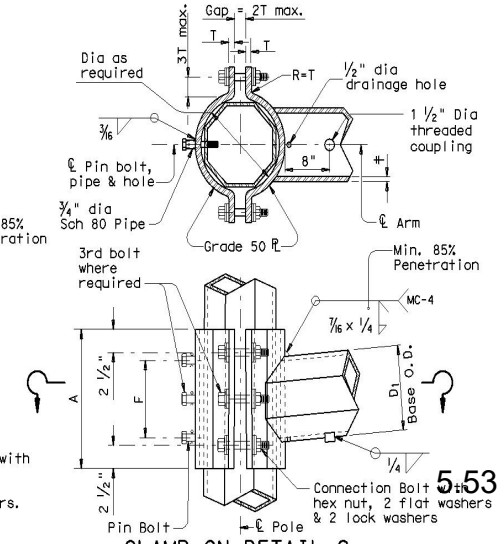

CLAMP-ON DETAIL 2

ARM SIZE D_1	ARM SIZE ϕ	A	F	CONN. BOLTS No.	CONN. BOLTS Dia	PIN BOLTS No.	PIN BOLTS Dia
in.	in.	in.	in.	ea.	in.	ea.	in.
6.5	.179	12	6	4	1	2	5/8
7.5	.179	14	8	4	1	2	5/8
8.0	.179	14	8	4	1	2	5/8
9.0	.179	16	10	4	1	2	5/8
9.5	.179	18	12	6	1	3	5/8
9.5	.239	18	12	6	1	3	5/8
10.0	.239	18	12	6	1	3	5/8

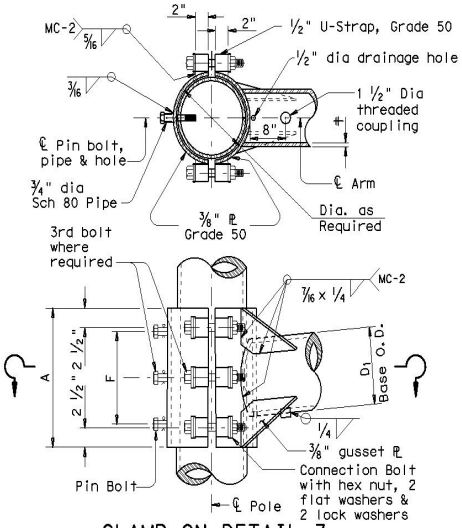

CLAMP-ON DETAIL 3

GENERAL NOTES:

Clamp-on details are used for the second arm on dual mast arm assemblies. A Maximum 1 1/2" wide vertical slotted hole shall be cut in the front clamp plate to facilitate drainage during galvanizing. The slot shall be centered behind the arm and shall be no longer than the arm diameter minus 1"

Fixed mount details are used for single mast arm assemblies and for the first arm on dual mast arm assemblies.

Where duplicate parts occur on a detail, welds shown for one part shall apply to all similar parts on the detail.

Pin bolts are required to prevent rotation of clamp-on arms under design wind forces.

NOTE:

Pin bolts shall be A325 with threads excluded from the shear plane. Pin bolt and 3/4" dia pipe shall have 5/16" dia holes for a 1/8" dia galvanized cotter pin. Back clamp plate shall be furnished with a 3/4" dia hole for each pin bolt. An 11/16" dia hole for each pin bolt shall be field drilled through the pole after arm orientations have been approved by the Engineer.

Texas Department of Transportation
Traffic Operations Division

STANDARD ASSEMBLY FOR TRAFFIC SIGNAL SUPPORT STRUCTURES

MAST ARM CONNECTIONS

MA-C-12

July 11, 2023

© TxDOT August 1995

DN: MS	CK: JSY	DW: MMF	CK: JSY
REVISIONS	CONT	SECT	JOB	HIGHWAY
5-96				
5-09				
1-12				
	DIST	COUNTY		SHEET NO.
				13

126A

PACKET 5.53

DISCLAIMER: The use of this standard is governed by the "Texas Engineering Practice Act". No warranty of any kind is made by TxDOT for any purpose whatsoever. TxDOT assumes no responsibility for the conversion of this standard to other formats or for incorrect results or damages resulting from its use.

DATE:
FILE:

TABLE OF DIMENSIONS for ILSN Support Arm Clamp-on Details 1, 2 and 3						
ILSN ARM SIZE	A	F	CONN. BOLTS		PIN BOLTS	
			No.	Dia	No.	Dia
	in.	in.	ea.	in.	ea.	in.
3 in. dia Schedule 40 Pipe	10	4	4	¾	2	⅝

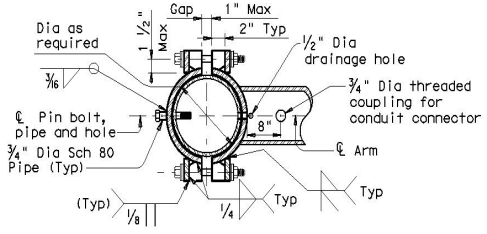

SECTION A-A

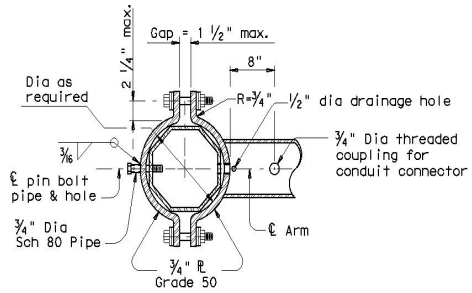

SECTION B-B

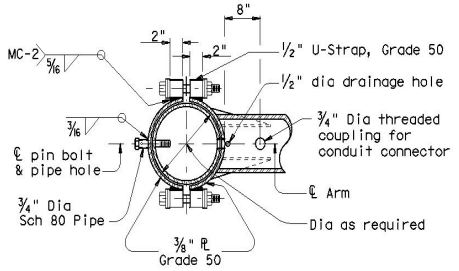

SECTION C-C

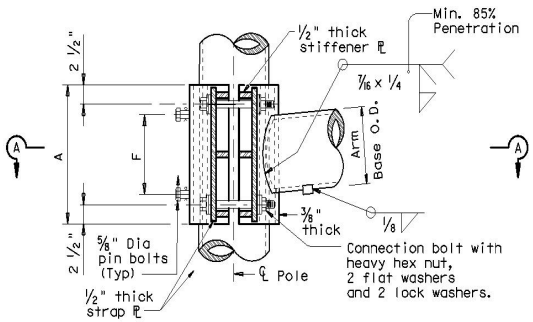

ILSN CLAMP-ON DETAIL 1

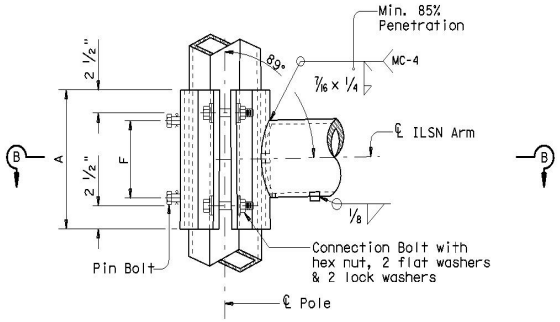

ILSN CLAMP-ON DETAIL 2

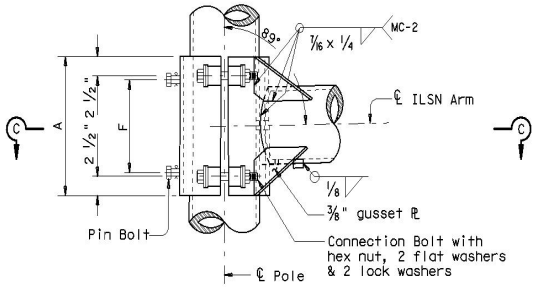

ILSN CLAMP-ON DETAIL 3

GENERAL NOTES:

Clamp-on details shall be used for ILSN support arm assemblies. A 1 ½" inch diameter hole shall be cut in the front clamp plate for wiring access. A matched hole shall be field drilled through the pole to provide wire access after arm is oriented. Deburr both holes.

Where duplicate parts occur on a detail, welds shown for one part shall apply to all similar parts on the details.

Pin bolts are required to prevent rotation of clamp-on arms under design wind forces.

NOTE:

Pin bolts shall be A325 with threads excluded from the shear plane. Pin bolt and ¾" dia pipe shall have 3/16" dia holes for a ⅛" dia galvanized cotter pin. Back clamp plate shall be furnished with a ¾" dia hole for each pin bolt. An 11/16" dia hole for each pin bolt shall be field drilled through the pole after arm orientations have been approved by the Engineer.

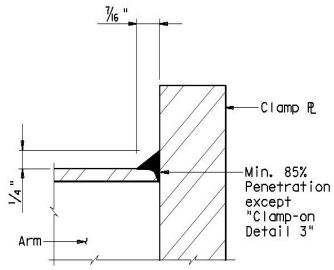

CLAMP-ON ARM

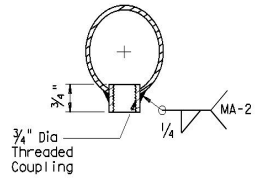

ILSN ARM COUPLING DETAIL

ARM BASE WELD DETAILS

Texas Department of Transportation
Traffic Operations Division

STANDARD ASSEMBLY FOR TRAFFIC SIGNAL SUPPORT STRUCTURES

MAST-ARM CONNECTIONS

MA-C(ILSN)-12

© TxDOT August 1995

DN: MS	CK: JSY	DW: VMF	CK: JSY
REVISIONS	CONT	SECT	JOB	HIGHWAY
5-96				
1-12				
	DIST	COUNTY		SHEET NO.
				14

126B

DISCLAIMER: The use of this standard is governed by the "Texas Engineering Practice Act". No warranty of any kind is made by TxDOT for any purpose whatsoever. TxDOT assumes no responsibility for the conversion of this standard to other formats or for incorrect results or damages resulting from its use.

DATE:
FILE:

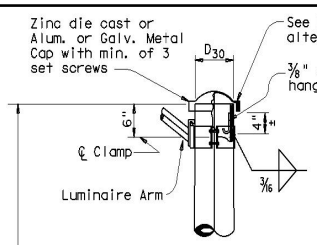

DETAIL A

(for pole with luminaire)

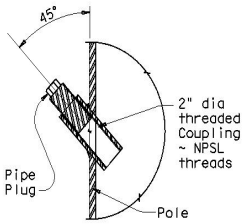

POLE COUPLING DETAIL

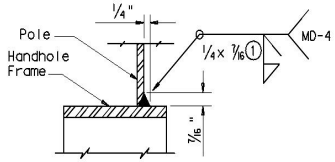

DETAIL G

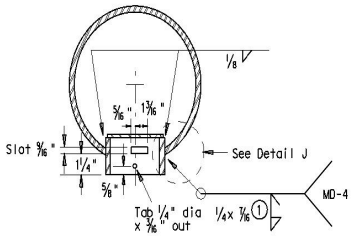

SECTION X-X

Opening for access compartment shall be no more than 1/16 inch wider than the access compartment itself.

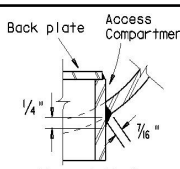

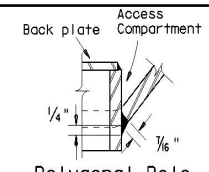

DETAIL J

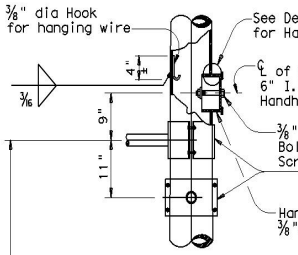

DETAIL B

(If ILSN applied)

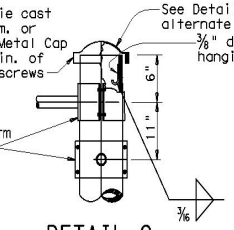

DETAIL C

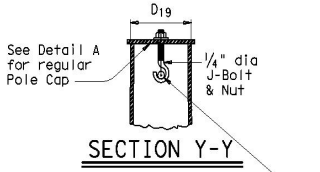

SECTION Y-Y

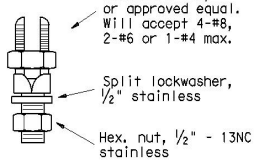

COPPER GROUND CONNECTOR

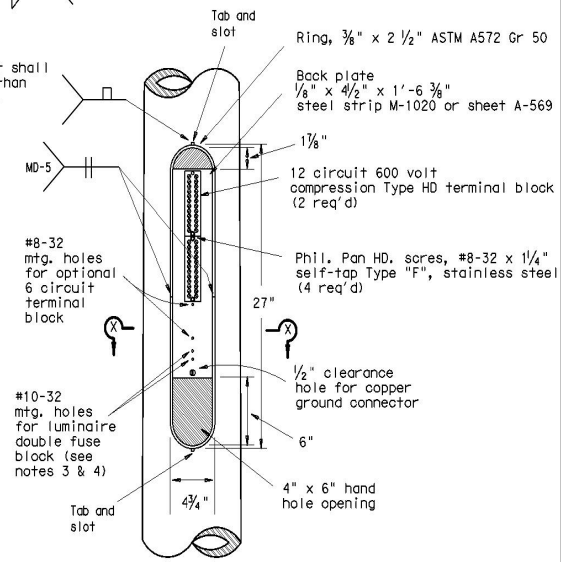

ACCESS COMPARTMENT

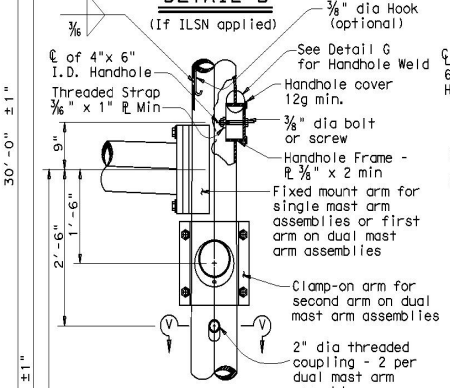

DETAIL D

(for 30' pole with luminaire and ILSN sign)

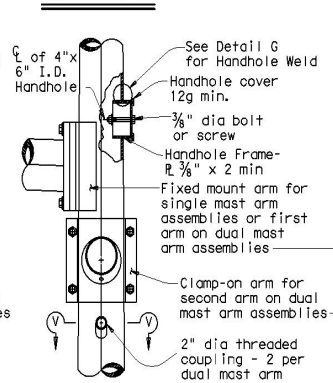

DETAIL E

(for 24' pole with ILSN sign and no luminaire)

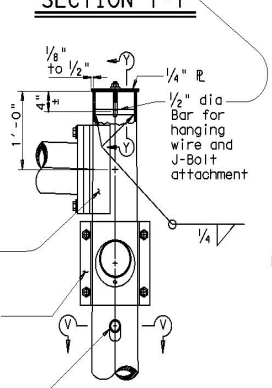

DETAIL F

(for 19' pole with no ILSN sign and no luminaire)

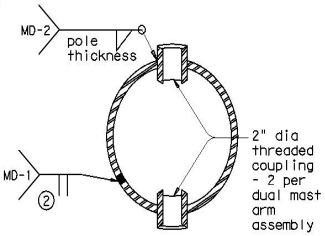

SECTION V-V

NOTES:

1. The cover shall be one piece formed from ABS plastic, shall be a pearl gray color, and shall be suitable for exposure to harsh sunlight and extreme weather. Cover shall latch with two screw latches and shall fit tightly to the enclosure ring to create a rainproof seal. Latch screws shall be 1/4-20 stainless flat socket head screws with tamper proof feature.
2. The pole manufacturer shall provide with each pole a separate kit consisting of: one cover with two latching assemblies, two terminal strips (Marathon #985GP12CU or approved equal), four #8-32 x 1 1/4" self tapping type "F" stainless steel pan head screws, and one ground connector (Blackburn TTC, Burndy KC22J12T13, or Ilsco SSS-5). The traffic signal contractor shall install the kit items in the field.
3. The screw hole spacing on the enclosure back plate shall be for two Marathon #985GP12 terminal strips, one Marathon #985GP06CU terminal strip, and one Bussmann #BM6032B fuse block.
4. Install one Bussmann #BM6032B, Littelfuse #L60030M-2C, or Ferraz-Shawmut #30352 fuse block for poles where luminaires are to be installed.

Anchor Bolt Diameter	Bolt Hole Diameter	Slot Length	Bolt Circle Diameter	Base PL Dim. L x T	Adjust. Range
1 1/2"	1 3/4"	3 1/2"	17"	18" x 1 1/2"	13.4°
1 3/4"	2"	4"	19"	20" x 1 3/4"	13.5°
2"	2 1/4"	4 1/2"	21"	22" x 2"	13.6°
2 1/4"	2 1/2"	5"	23"	24" x 2 1/4"	13.7°

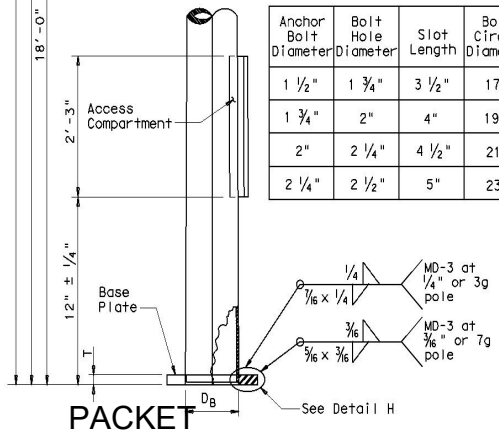

PACKET

POLE ELEVATION

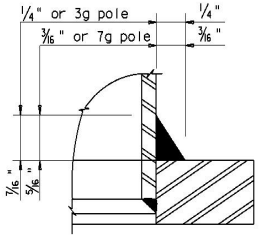

DETAIL H

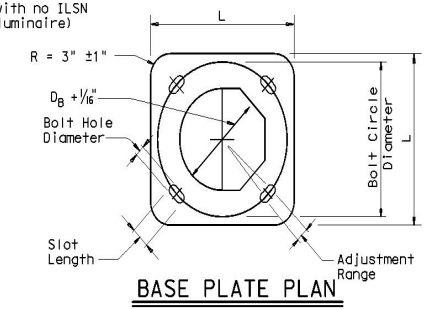

BASE PLATE PLAN

① 85% Min. penetration

② 60% Min. penetration 100% penetration within 6" of circumferential base welds.

Texas Department of Transportation
Traffic Operations Division

TRAFFIC SIGNAL SUPPORT STRUCTURES MAST ARM POLE DETAILS

MA-D-12

© TxDOT August 1995

DN: MS	CK: JSY	DW: FDN	CK: CAL
REVISIONS	CONT	SECT	JOB	HIGHWAY
8-99 1-12				
	DIST	COUNTY		SHEET NO.
				15

5.55

July 11, 2023

127

DISCLAIMER: The use of this standard is governed by the "Texas Engineering Practice Act". No warranty of any kind is made by TxDOT for any purpose whatsoever. TxDOT assumes no responsibility for the conversion of this standard to other formats or for incorrect results or damages resulting from its use.

DATE:
FILE:

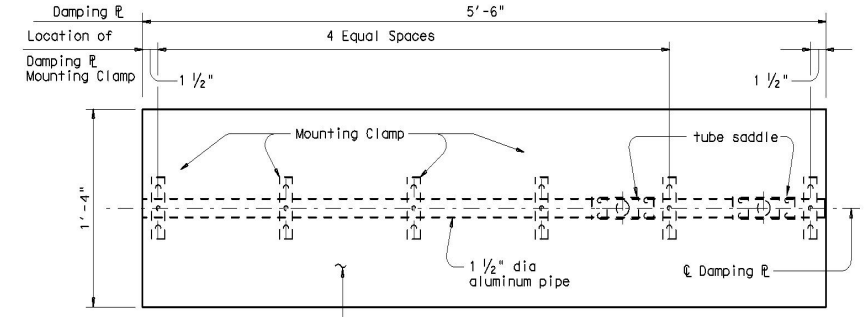

PLAN

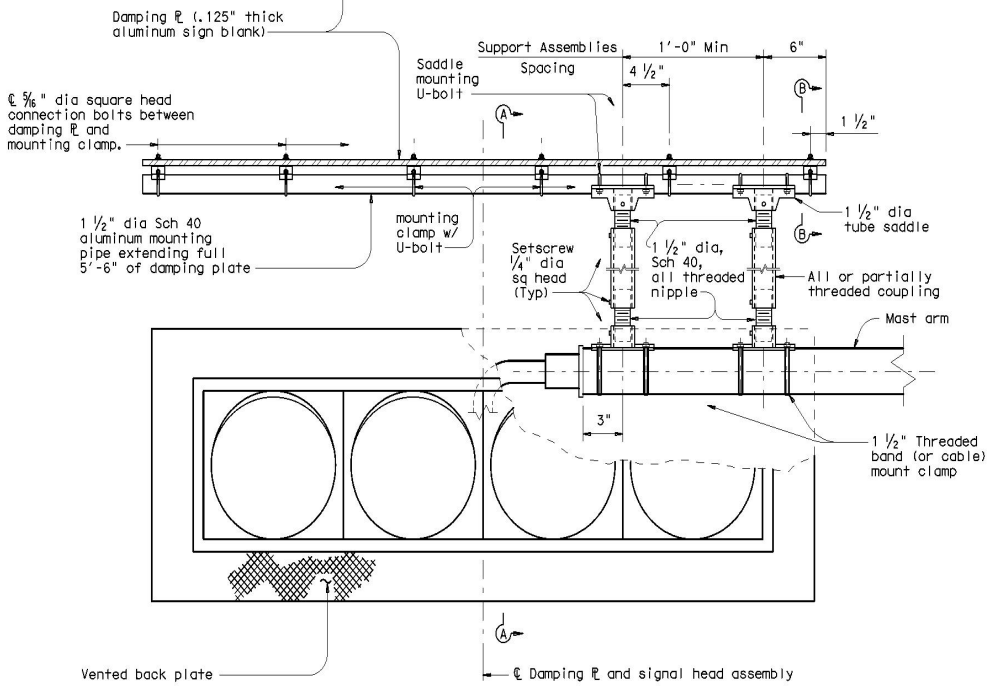

ELEVATION

DAMPING PLATE MOUNTING DETAILS

(Showing alternate placement of signal head)

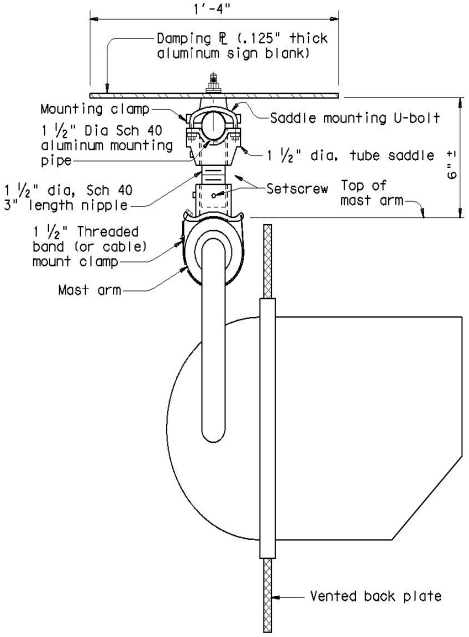

SECTION A-A

(Showing standard placement of signal head)
(Mounting clamp U-bolt is not shown for clarity)

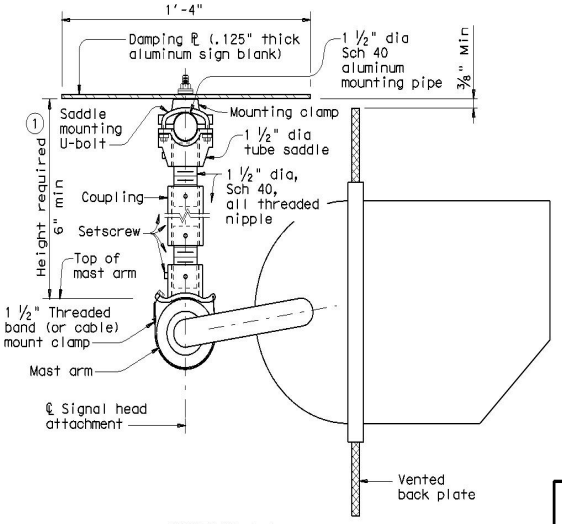

SECTION A-A

(Showing alternate placement of signal head)
(Mounting clamp U-bolt is not shown for clarity)

GENERAL NOTES:

In accordance with the findings of TxDOT sponsored research, the installation of a damping plate in accordance with the details shown here at the end of signal mast arms of SMA and DMA standard structures reduces excessive harmonic vertical vibration, and thus fatigue damage. Any deviation from these details may reduce the effectiveness of this damping device.

Aluminum sign blank for damping plate shall conform to Departmental Material Specifications DMS-7110. Materials for mast arm mounting clamp and tube saddle shall be aluminum castings or aluminum alloys as in accordance with manufacturers' stipulations. Mounting pipe, pipe nipple and coupling shall be aluminum alloy 6061-T6 or 6063-T6. Damping plate mounting clamp and u-bolt assemblies shall conform to Standard sheet SMD(GEN)-08. U-bolts for saddle mounting shall have a minimum yield strength of 36 ksi.

Damping plate shall be mounted horizontally. Position centerline of damping plate to align with centerline of signal head assembly. Vertical clearance between signal head (with or without backing plate) and bottom of damping plate shall be maintained as shown. The attachments shown here are examples only, other supporting details which meet both alignment and vertical clearance requirements are also acceptable.

Unless stipulated by the manufacturers, all steel parts shall be galvanized finish in accordance with Standard Specification Item 445, "Galvanizing".

Contractor shall verify applicable field dimensions before the installation.

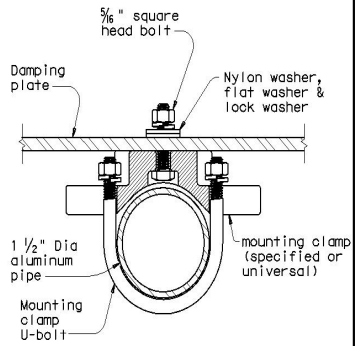

SECTION B-B

(Showing damping plate attachment)

① Recommended supporting assemblies to achieve required height			
Height required	One nipple each length	Two nipples each length plus	One coupling each length
6"-6 ¾"	3"	-	-
7"-8 ½"	4"	-	-
9"-10 ½"	6"	-	-
11"-15 ½"	-	4"	5"
16"-24"	-	6"	10"

Texas Department of Transportation
Traffic Operations Division

MAST ARM DAMPING PLATE DETAILS

MA-DPD-12

© TxDOT January 2012

DN: JSY	CK: ARC	DW: TGG	CK: JSY
REVISIONS	CONT	SECT	JOB	HIGHWAY
	DIST	COUNTY	SHEET NO.
			16

DISCLAIMER: The use of this standard is governed by the "Texas Engineering Practice Act". No warranty of any kind is made by TxDOT for any purpose whatsoever. TxDOT assumes no responsibility for the conversion of this standard to other formats or for incorrect results or damages resulting from its use.

Arm Length	ROUND POLES					POLYGONAL POLES					Foundation Type
	D_B	D_{19}	D_{24}	D_{30}	① thk	D_B	D_{19}	D_{24}	D_{30}	① thk	
ft.	in.	in.	in.	in.	in.	in.	in.	in.	in.	in.	
20	10.5	7.8	7.1	6.3	.179	11.5	8.5	7.7	6.8	.179	30-A
24	11.0	8.3	7.6	6.8	.179	12.0	9.0	8.2	7.3	.179	30-A
28	11.5	8.8	8.1	7.3	.179	12.5	9.5	8.7	7.8	.179	30-A
32	12.5	9.8	9.1	8.3	.179	12.0	9.0	8.2	7.3	.239	30-A
36	12.0	9.3	8.6	7.8	.239	12.5	9.5	8.7	7.8	.239	36-A
40	12.0	9.3	8.6	7.8	.239	13.5	10.5	9.7	8.8	.239	36-A
44	12.5	9.8	9.1	8.3	.239	14.0	11.0	10.2	9.3	.239	36-A
48	13.0	10.3	9.6	8.8	.239	15.0	12.0	11.2	10.3	.239	36-A

Arm Length	ROUND ARMS					POLYGONAL ARMS				
	L_1	D_1	D_2	① thk	Rise	L_1	D_1	② D_2	① thk	Rise
ft.	ft.	in.	in.	in.		ft.	in.	in.	in.	
20	19.1	6.5	3.8	.179	1'-9"	19.1	7.0	3.5	.179	1'-8"
24	23.1	7.5	4.3	.179	1'-10"	23.1	7.5	3.5	.179	1'-9"
28	27.1	8.0	4.2	.179	1'-11"	27.1	8.0	3.5	.179	1'-10"
32	31.0	9.0	4.7	.179	2'-1"	31.0	9.0	3.5	.179	2'-0"
36	35.0	9.5	4.6	.179	2'-4"	35.0	10.0	3.5	.179	2'-1"
40	39.0	9.5	4.1	.239	2'-8"	39.0	9.5	3.5	.239	2'-3"
44	43.0	10.0	4.1	.239	2'-11"	43.0	10.0	3.5	.239	2'-6"
48	47.0	10.5	4.1	.239	3'-4"	47.0	11.0	3.5	.239	2'-9"

D_B = Pole Base O.D.
D_{19} = Pole Top O.D. with no Luminaire and no ILSN
D_{24} = Pole Top O.D. with ILSN w/out Luminaire
D_{30} = Pole Top O.D. with Luminaire
D_1 = Arm Base O.D.
D_2 = Arm End O.D.
L_1 = Shaft Length
L = Nominal Arm Length

① Thickness shown are minimums, thicker materials may be used.

② D_2 may be increased by up to 1" for polygonal arms.

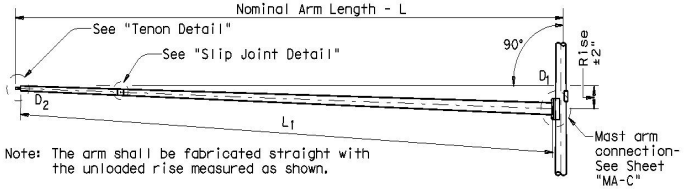

Note: The arm shall be fabricated straight with the unloaded rise measured as shown.

TRAFFIC SIGNAL ARM

(Fixed Mount)

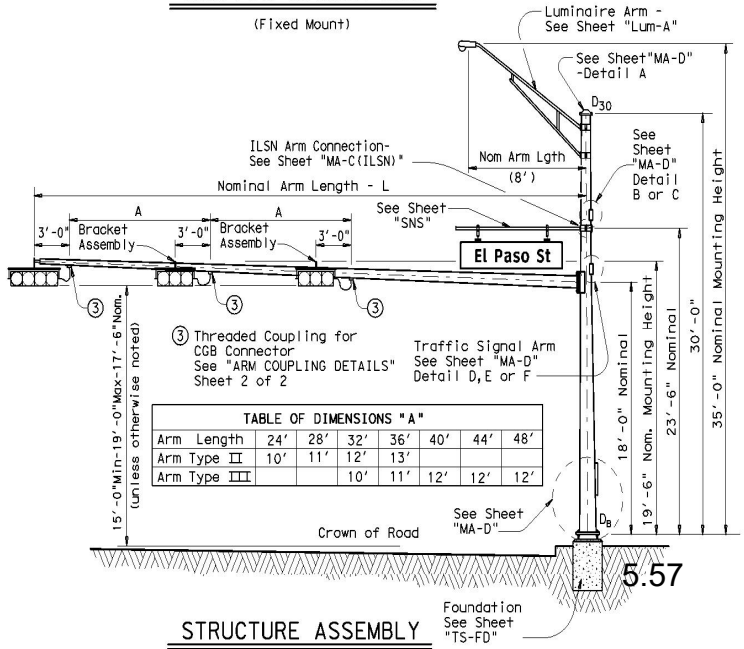

TABLE OF DIMENSIONS "A"							
Arm Length	24'	28'	32'	36'	40'	44'	48'
Arm Type II	10'	11'	12'	13'			
Arm Type III			10'	11'	12'	12'	12'

STRUCTURE ASSEMBLY

SHIPPING PARTS LIST

Ship each pole with the following attached: enlarged hand hole, pole cap, fixed-arm connection bolts and washers and any additional hardware listed in the table.

Nominal Arm Length	30' Poles With Luminaire		24' Poles With ILSN		19' Poles With No Luminaire and No ILSN	
	Above hardware plus: One (or two if ILSN attached) small hand hole, clamp-on simplex		Above hardware plus one small hand hole		See note above	
ft	Designation	Quantity	Designation	Quantity	Designation	Quantity
20	20L-80		20S-80	1	20-80	
24	24L-80		24S-80		24-80	
28	28L-80		28S-80		28-80	
32	32L-80		32S-80		32-80	
36	36L-80		36S-80		36-80	
40	40L-80		40S-80		40-80	
44	44L-80		44S-80		44-80	
48	48L-80		48S-80		48-80	

Traffic Signal Arms (1 per Pole) Ship each arm with the listed equipment attached

Nominal Arm Length	Type I Arm (1 Signal) 1 CGB connector		Type II Arm (2 Signals) 1 Bracket Assembly and 2 CGB Connectors		Type III Arm (3 Signals) 2 Bracket Assemblies and 3 CGB Connectors	
ft	Designation	Quantity	Designation	Quantity	Designation	Quantity
20	20I-80	1				
24	24I-80		24II-80			
28	28I-80		28II-80			
32			32II-80		32III-80	
36			36II-80		36III-80	
40					40III-80	
44					44III-80	
48					48III-80	

Luminaire Arms (1 per 30' pole)

Nominal Arm Length	Quantity
8' Arm	

ILSN Arm (Max. 2 per pole) Ship with clamps, bolts and washers

Nominal Arm Length	Quantity
7' Arm	
9' Arm	1

Anchor Bolt Assemblies (1 per pole)

Anchor Bolt Diameter	Anchor Bolt Length	Quantity
1 ½"	3'-4"	
1 ¾"	3'-10"	1

Each anchor bolt assembly consists of the following: Top and Bottom templates, 4 anchor bolts, 8 nuts, 8 flat washers, and 4 nut anchor devices (Type 2) per Standard Drawing "TS-FD".

Templates may be removed for shipment.

3-15-21

Texas Department of Transportation
Traffic Operations Division

TRAFFIC SIGNAL SUPPORT STRUCTURES

SINGLE MAST ARM ASSEMBLY

(80 MPH WIND ZONE)

SMA-80(1)-12

© TxDOT August 1995

DN: MS	CK: JSY	DW: VMF	CK: JSY
REVISIONS	CONT	SECT	JOB	HIGHWAY
5-96				
11-99				
1-12				
	DIST	COUNTY		SHEET NO.
				17

122A

DATE: July 11, 2023
FILE:

DISCLAIMER:
The use of this standard is governed by the "Texas Engineering Practice Act". No warranty of any kind is made by TxDOT for any purpose whatsoever. TxDOT assumes no responsibility for the conversion of this standard to other formats or for incorrect results or damages resulting from its use.

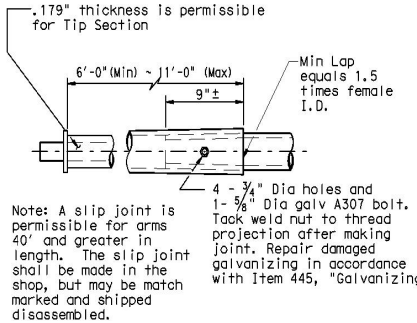

SLIP JOINT DETAIL

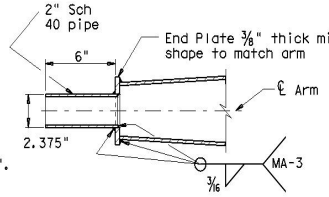

TENON DETAIL

VIBRATION WARNING

Mast Arms of SMA and DMA structures and clamp-on Arms of LMA structures of approximately 40 ft or longer are subject to harmonic vertical vibrations in light wind conditions due to the aeroelastic characteristics of a few of the myriads of possible combinations of the following: signal numbers, weights and positions; existence/solidity of backplates; presence of additional attachments to the arm, such as signs and cameras; arm-wind orientation; and arm-pole stiffness.

Such vibrations may cause fatigue damage to the structure and may lead to galloping in moderate wind conditions which may further damage the structure and alarm the public. Tests have indicated that when wind is blowing toward the back side of signal heads having un-vented backplates attached the probability of unacceptable harmonic vibration and/or galloping is rather high.

If backplates are not required for improved visibility they should not be applied to the signal heads or, if they must be applied, they should be vented as a first and inexpensive measure to mitigate vibrations.

The traffic signal mast arms shall be visually inspected in 5 to 20 mph wind conditions after installation of signal heads and any attachments, including any required backpates. If vertical movements with a total excursion (maximum upward excursion to maximum downward excursion) of more than approximately 8" are observed at the arm tip, a damping plate shall be fitted to the arm. See "Damping Plate Mounting Details" on standard sheet, MA-DPD-10.

This visual inspection shall be repeated after each modification of the structure that could affect its aeroelastic response. Excessive vibrations shall not be allowed to continue for more than two days.

Stainless steel bands (or Cables) and cast bracket as in "Astro-Brac", "Sky Bracket" or "Easy Bracket" with 1 ½" Dia Threaded Coupling.

BRACKET ASSEMBLY

GENERAL NOTES:

Design conforms to 1994 AASHTO Standard Specifications for Structural Supports for Highway Signs, Luminaires, and Traffic Signals and Interim Specifications thereto. Design Wind Speed equals 80 mph plus a 1.3 gust factor.

Poles are designed to support one 8'-0" luminaire arm, one 9'-0" internally lighted street name sign and one traffic signal arm with a length as tabulated. The specified luminaire load applied at the end of the luminaire arm equals 60 lbs vertical dead load plus the horizontal wind load on an effective projected area of 1.6 sq ft. The specified internally lighted street name sign load applied 4.5 ft from the centerline of the pole equals 85 lbs vertical dead load plus horizontal wind load on an effective projected area of 11.5 sq ft. The specified signal load applied at the end of the traffic signal arm equals 180 lbs vertical dead load plus the horizontal wind load on an effective projected area of 32.4 sq ft (actual area times drag coefficient).

See Standard Sheet "MA-D" for pole details, "MA-C" for traffic signal arm connection details, "MA-C (ILSN)" for internally lighted street name sign arm connection details, "LUM-A" for luminaire arm and connection details, "SNS" for internally lighted street name sign details, and "TS-FD" for anchor bolt and foundation details. See "MA-C" for material specifications.

Fabrication shall be in accordance with Item 686, "Traffic Signal Pole Assemblies (Steel)" and with the details, dimensions, and weld procedures shown herein. Weld references call for preapproved weld procedures which the Fabricator must obtain prior to fabrication. Materials, fabrication tolerances, and shipping practices shall meet the requirements of this sheet and Item 686, "Traffic Signal Pole Assemblies (Steel)".

Unless otherwise noted, all parts shall be galvanized in accordance with Item 445, "Galvanizing", after fabrication.

Deviation from the details and dimensions shown herein require submission of shop drawings in accordance with Item 441, "Steel Structures". Alternate designs are not acceptable.

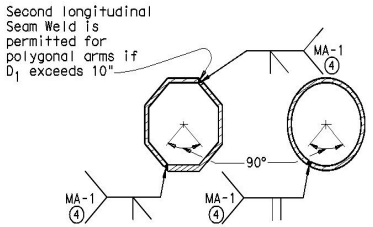

ARM WELD DETAIL

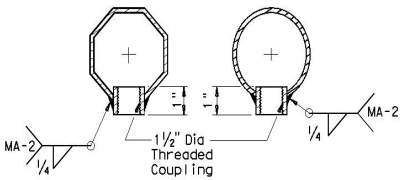

ARM COUPLING DETAILS

④ 60% Min. penetration 100% pemetration within 6" of circumferential base welds.

Texas Department of Transportation
Traffic Operations Division

TRAFFIC SIGNAL SUPPORT STRUCTURES

SINGLE MAST ARM ASSEMBLY

(80 MPH WIND ZONE)

SMA-80(2)-12

© TxDOT August 1995

DN: MS	CK: JSY	DW: VMF	CK: JSY
REVISIONS	CONT	SECT	JOB	HIGHWAY
5-96				
1-12				
	DIST	COUNTY		SHEET NO.
				18

122B

DATE:
FILE:

DISCLAIMER:
The use of this standard is governed by the "Texas Engineering Practice Act". No warranty of any kind is made by TxDOT for any purpose whatsoever. TxDOT assumes no responsibility for the conversion of this standard to other formats or for incorrect results or damages resulting from its use.

DATE:
FILE:

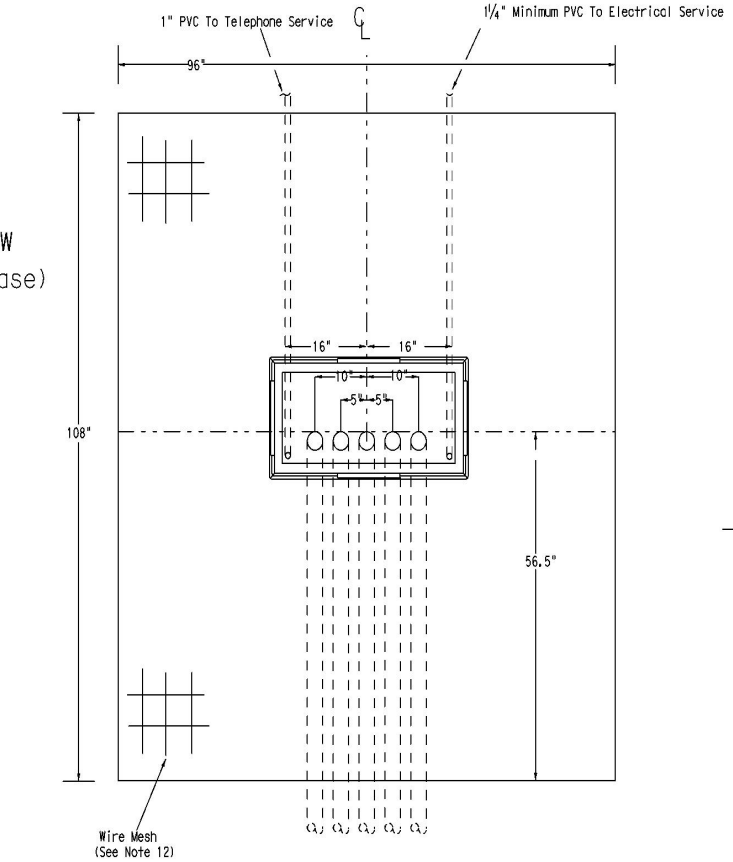

TOP VIEW
(Slab & Base)

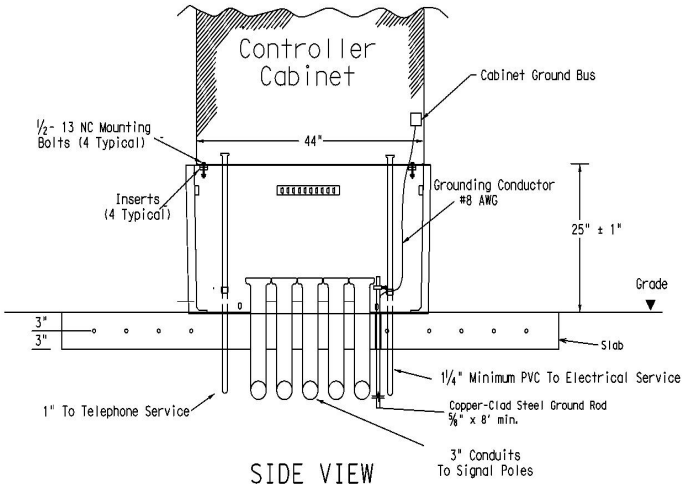

SIDE VIEW
(Slab & Base)

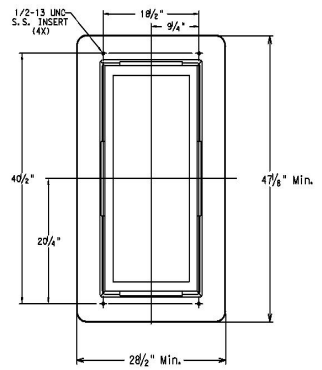

CABINET BASE

TRAFFIC SIGNAL CONTROLLER BASE:

1. Provide a traffic signal controller base (cabinet base) manufactured of polymer concrete material consisting of calcareous and siliceous stone; glass fibers and thermoset polyester resin. The polymer concrete cabinet base must be reinforced on the inside of the cabinet base with fiberglass matting. Provide one of the following bases: Armorcast Part # A6001848X24, Quazite Model # PG3048Z709, or other as approved by TxDOT Traffic Operation Division.
2. The polymer concrete material must have a minimum compressive strength of 10,300 pounds per square inch (psi), minimum flexural strength of 3600 psi, and minimum shear strength of 3600 psi.
3. The polymer concrete cabinet base must conform to the dimensions shown and must accommodate a standard TxDOT basemount cabinet.
4. Supply the cabinet base with four ½"-13 UNC stainless steel inserts for attachment of the cabinet to the base. Inserts must withstand a minimum torque of 50 ft-lb and a minimum straight pull out strength of 750 lbs.
5. Provide the cabinet base with 4 cable racks mounted one on each side of the base 2" to 7 " from the top edge of the base. Unless approved otherwise, cable racks must be 1-1/2 x ⅜ x ⅜ inch steel channel with eight T-slots spaced at 1-1/2 inches. The cable racks must easily accommodate the insertion of tie wraps to attach field wiring to the racks to serve as strain relief. Secure cable racks to the base using ½"-13 UNC stainless steel screws and inserts.
6. The cabinet base, when secured to the concrete slab with controller cabinet attached, must withstand a minimum wind load of 125 mph or a 850 lb force applied at 49" above the bottom of the base without causing the base or cabinet to come out of their anchored position or cause any permanent deformation. The manufacturer must supply certification by an independent testing laboratory or sealed by a Texas Licensed Professional Engineer. Provide the cabinet base with hardware for attachment to a concrete slab.
7. The traffic signal base must be permanently marked either by impress or by permanent ink with the manufacturer's model number and name or logo.
8. Seal the base to the concrete with a silicone caulk bead and fastened to the slab per manufacturer's instructions.

CONCRETE SLAB:

9. Traffic signal controller pad must be a portland cement concrete slab poured in place, must conform to the dimensions shown, and must be level.
10. Bond a #8 AWG copper ground wire and an 8 ft ground rod bonded to the reinforcing mesh by a suitable UL Listed clamp and terminated to the cabinet grounding bus for the purpose of providing a local ground for the electrical grounding conductor. The electrical grounding conductor specified in Item 680-3.A.4 is required and must be terminated to the cabinet ground bus.
11. Install a PVC sleeve to prevent the ground rod from direct embedment in the slab.
12. Provide welded wire mesh 6X6-W2.9 X W2.9 for reinforcement. Provide joints and splices in the mesh with a minimum 6-inch overlap. Center the mesh between top and bottom and provide a minimum 3 inch cover on the edges.
13. Provide Class B concrete minimum for the slab in accordance with Item 421. Construct the slab in accordance with Item 531.

CONDUITS:

14. Stub up and run 3-inch conduits through the slab to the various traffic signal poles and ground boxes as shown on the layouts. Install the number of conduits as shown on layouts plus two additional 3 inch conduits for future use. Terminate the conduits with a bushing between 2 and 4-inches above the slab.
15. Extend conduits for future use at least 18-inches from the edge of the slab, terminate underground with a coupling, and cap and seal so that the seal can be removed without damaging the coupling. This must also apply to unused telephone conduit.
16. Stub up two separate conduits through the slab from the electrical and telephone services. Run the conduit for the electrical feed directly to the electrical service enclosure. Run the conduit for the telephone line directly to the telephone service, usually located on the same pole as the electrical service. Telephone must not under any circumstance share a conduit with any other function.
17. Terminate electric and telephone conduits above the slab with a coupling. After the base is installed, extend the conduits above the top of the base and secure to the base using a steel one-hole strap or similar suitable substitute.

CONTROLLER CABINET:

18. Anchor the controller cabinet to the base using four stainless steel 1/2-13 NC bolts.
19. The silicone caulk bead specified in Item 680-3.B must be RTV 133.

PAYMENT:

20. Bid TS-CF as subsidiary to Item 680.

Texas Department of Transportation
Traffic Operations Division

TRAFFIC SIGNAL CONTROLLER CABINET BASE AND PAD

TS-CF-04

PACKET
5.59
July 11, 2023

© TXDOT OCTOBER 2000

DN: TXDOT	CK: TXDOT	DW: TXDOT	CK: TXDOT
REVISIONS	CONT	SECT	JOB	HIGHWAY
12-04				
	DIST	COUNTY		SHEET NO.
				19

DISCLAIMER: The use of this standard is governed by the "Texas Engineering Practice Act". No warranty of any kind is made by TxDOT for any purpose whatsoever. TxDOT assumes no responsibility for the conversion of this standard to other formats or for incorrect results or damages resulting from its use.

DATE:
FILE:

FOUNDATION DESIGN TABLE

FDN TYPE	DRILLED SHAFT DIA	REINFORCING STEEL		EMBEDDED DRILLED SHAFT LENGTH-ft ④, ⑤, ⑥			ANCHOR BOLT DESIGN ①				FOUNDATION DESIGN LOAD ②		TYPICAL APPLICATION
		VERT BARS	SPIRAL & PITCH	TEXAS CONE PENETROMETER N blows/ft 10	15	40	ANCHOR BOLT DIA	Fy (ksi)	BOLT CIR DIA	ANCHOR TYPE	MOMENT K-ft	SHEAR Kips	
24-A	24"	4- #5	#2 at 12"	5.7	5.3	4.5	¾"	36	12 ¾"	1	10	1	Pedestal pole, pedestal mounted controller.
30-A	30"	8- #9	#3 at 6"	11.3	10.3	8.0	1 ½"	55	17"	2	87	3	Mast arm assembly. (see Selection Table)
36-A	36"	10- #9	#3 at 6"	13.2	12.0	9.4	1 ¾"	55	19"	2	131	5	Mast arm assembly. (see Selection Table) 30' strain pole with or without luminaire.
36-B	36"	12- #9	#3 at 6"	15.2	13.6	10.4	2"	55	21"	2	190	7	Mast arm assembly. (see Selection Table) Strain pole taller than 30' & strain pole with mast arm
42-A	42"	14- #9	#3 at 6"	17.4	15.6	11.9	2 ¼"	55	23"	2	271	9	Mast arm assembly. (see Selection Table)

NOTES:

① Anchor bolt design develops the foundation capacity given under Foundation Design Loads.

② Foundation Design Loads are the allowable moments and shears at the base of the structure.

③ Foundations may be listed separately or grouped according to similarity of location and type. Quantities are for the Contractor's information only.

④ Field Penetrometer readings at a depth of approximately 3 to 5 feet may be used to adjust shaft lengths.

⑤ If rock is encountered, the Drilled Shaft shall extend a minimum of two diameters into solid rock.

⑥ Decimal lengths in Design Table are to allow interpolation for other penetrometer values. Round to nearest foot for entry into Summary Table.

FOUNDATION SUMMARY TABLE ③

LOCATION IDENTIFICATION	AVG. N BLOW /ft.	FDN TYPE	NO. EA	DRILLED SHAFT LENGTH ⑥ (FEET) 24-A	30-A	36-A	36-B	42-A
P-1	10	24A	1	6				
P-3	10	36A	1			14		
TOTAL DRILLED SHAFT LENGTHS				6		14		

FOUNDATION SELECTION TABLE FOR STANDARD MAST ARM PLUS ILSN SUPPORT ASSEMBLIES (ft)

		FDN 30-A	FDN 36-A	FDN 36-B	FDN 42-A
80 MPH DESIGN WIND SPEED	MAX SINGLE ARM LENGTH	32'	48'		
	MAXIMUM DOUBLE ARM LENGTH COMBINATIONS	24' X 24'			
		28' X 28'			
		32' X 28'	32' X 32'		
			36' X 36'		
			40' X 36'		
			44' X 28'	44' X 36'	
100 MPH DESIGN WIND SPEED	MAX SINGLE ARM LENGTH		36'	44'	
	MAXIMUM DOUBLE ARM LENGTH COMBINATIONS		24' X 24'		
			28' X 28'		
			32' X 24'	32' X 32'	
				36' X 36'	
				40' x24'	40' X 36'
					44' x 36'

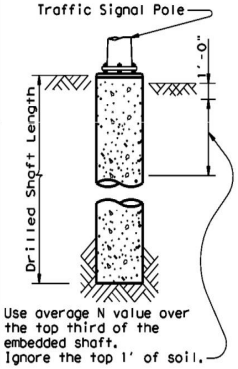

ANCHOR BOLT & TEMPLATE SIZES

BOLT DIA IN.	⑦ BOLT LENGTH	TOP THREAD	BOTTOM THREAD	BOLT CIRCLE	R2	R1
¾"	1'-6"	3"	—	12 ¾"	7 ⅛"	5 ⅝"
1 ½"	3'-4"	6"	4"	17"	10"	7"
1 ¾"	3'-10"	7"	4 ½"	19"	11 ¼"	7 ¾"
2"	4'-3"	8"	5"	21"	12 ½"	8 ½"
2 ¼"	4'-9"	9"	5 ½"	23"	13 ¾"	9 ¼"

⑦ Min dimensions given, longer bolts are acceptable.

EXAMPLE:
1. For 80mph design wind speed, foundation 30-A can support up to a 32' arm with another arm up to 28'
2. For 100mph design wind speed, foundation 36-A can support a single 36' mast arm.

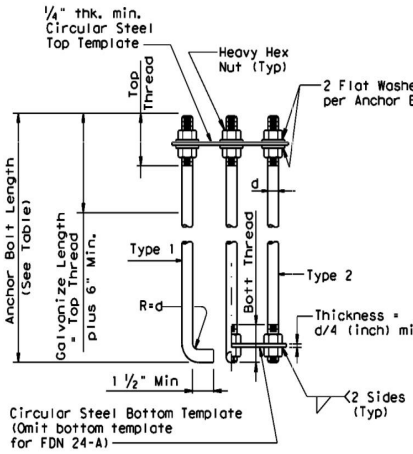

ANCHOR BOLT ASSEMBLY

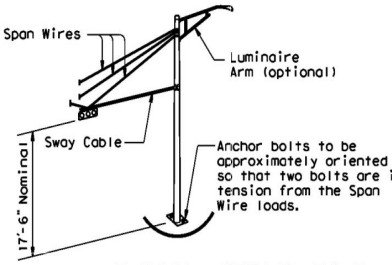

TYPICAL STRAIN POLE ASSEMBLY

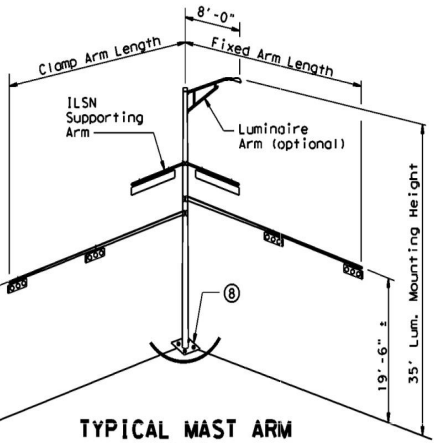

⑧ Orient anchor bolts orthogonal with the fixed arm direction to ensure that two bolts are in tension under dead load.

TYPICAL MAST ARM ASSEMBLY

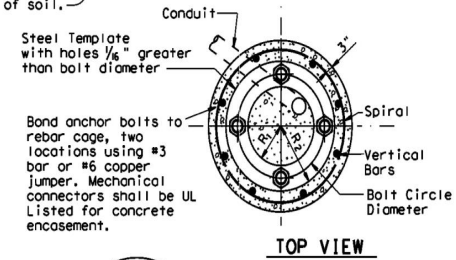

TOP VIEW

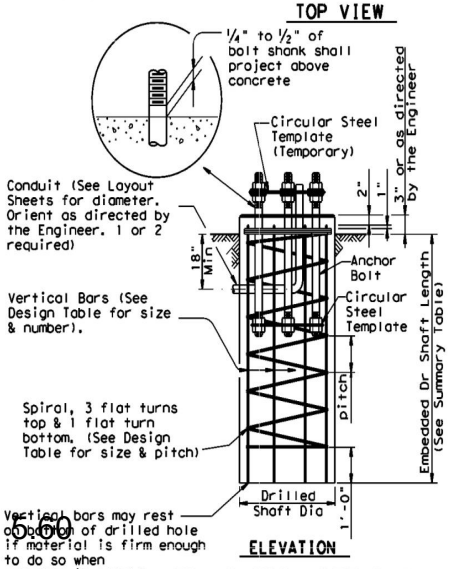

ELEVATION

FOUNDATION DETAILS

GENERAL NOTES:

Design conforms to 1994 AASHTO Standard Specifications for Structural Supports for Highway Signs, Luminaires and Traffic Signals and interim revisions thereto.

Reinforcing steel shall conform to Item 440, "Reinforcing Steel".

Concrete shall be Class "C".

Threads for anchor bolts and nuts shall be rolled or cut threads of 8UN series up to 2" in diameter or UNC series for all sizes. Bolts and nuts shall have Class 2A and 2B fit tolerances. Galvanized nuts shall be tapped after galvanizing.

Anchor bolts that are larger than 1" in diameter shall conform to "alloy steel" or "medium-strength mild steel" per Item 449, "Anchor Bolts". Anchor bolts that are 1" in diameter or less shall conform to ASTM A36. Galvanize a minimum of the top end thread length plus 6" for all anchor bolts unless otherwise noted. Exposed washers and exposed nuts shall be galvanized. All galvanizing shall be in accordance with Item 445, "Galvanizing".

Templates and embedded nuts need not be galvanized. Lubricate and tighten anchor bolts when erecting the structure in accordance with Item 449, "Anchor Bolts".

3-15-21

Texas Department of Transportation
Traffic Operations Division

TRAFFIC SIGNAL POLE FOUNDATION

TS-FD-12

PACKET 5.60 July 11, 2023

©TxDOT August 1995

DN: MS	CK: JSY	DW: MAO/MMF	CK: JSY/TEB
REVISIONS 5-96 11-98 1-12	CONT	SECT	JOB	HIGHWAY
	DIST	COUNTY	SHEET NO. 20

128

DISCLAIMER: The use of this standard is governed by the "Texas Engineering Practice Act". No warranty of any kind is made by TxDOT for any purpose whatsoever. TxDOT assumes no responsibility for the conversion of this standard to other formats or for incorrect results or damages resulting from its use.

DATE:
FILE:

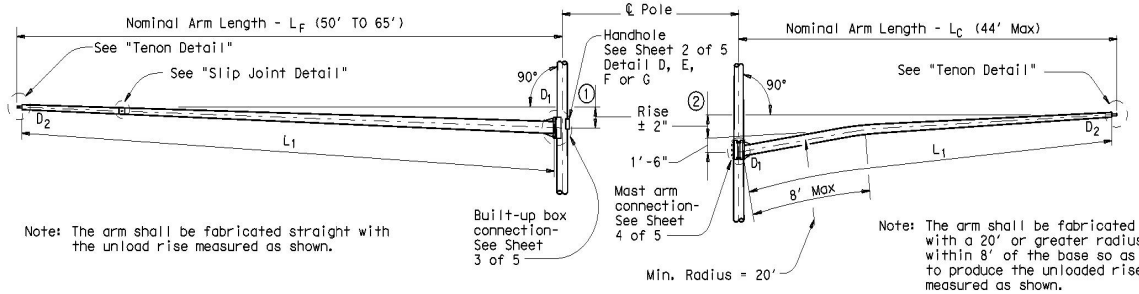

FIXED MOUNT TRAFFIC SIGNAL ARM

CLAMP-ON TRAFFIC SIGNAL ARM (IF REQUIRED)

① See Sheet 3 of 5 for Arm Rise

② See Sheet 4 of 5 for Arm Rise and Clamp-on Arm Details

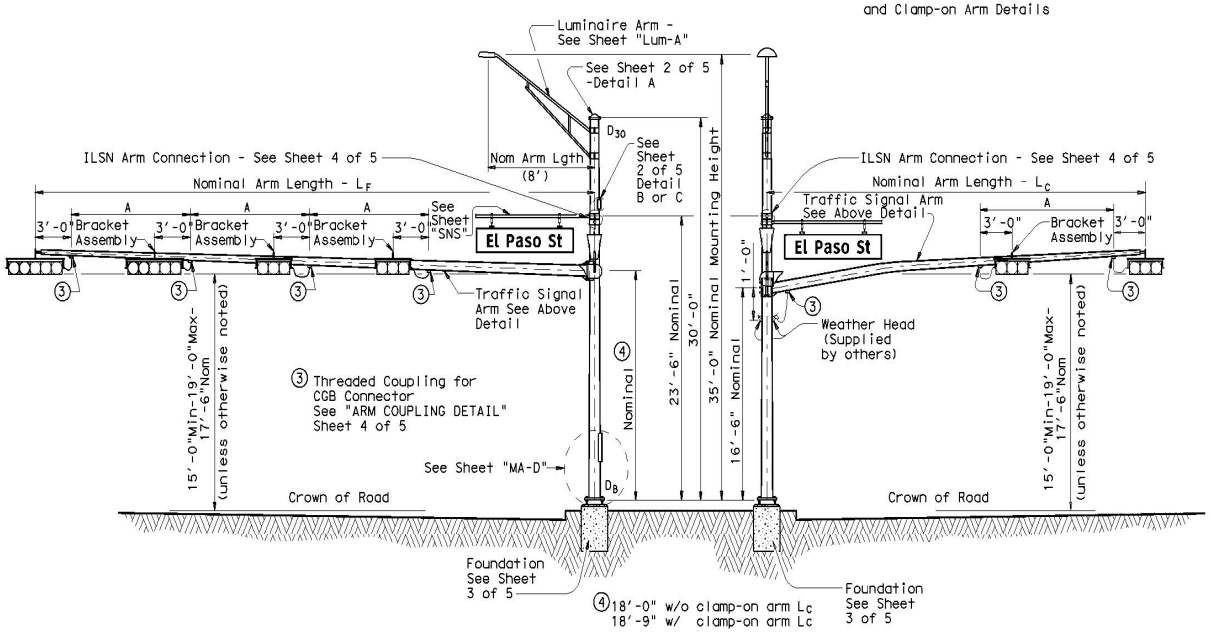

ELEVATION
(Showing fixed mount arm)

STRUCTURE ASSEMBLY

ELEVATION
(Showing clamp-on arm)

TABLE OF DIMENSIONS "A"										
Arm Length	24'	28'	32'	36'	40'	44'	50'	55'	60'	65'
Arm Type II	10'	11'	12'	13'						
Arm Type III			10'	11'	12'	12'				
Arm Type IV							12'	12'	12'	12'

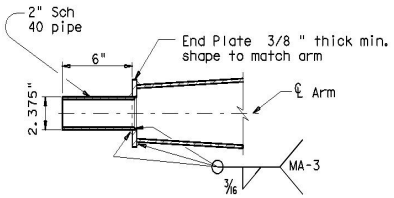

TENON DETAIL

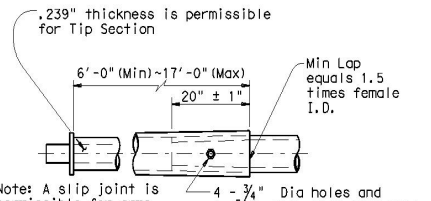

SLIP JOINT DETAIL (FIXED MOUNT ARM)

GENERAL NOTES:

Design conforms to 1994 AASHTO Standard Specifications for Structural Supports for Highway Signs, Luminaires, and Traffic Signals and Interim Specifications thereto. Design Wind Speed can be either 100 mph or 80 mph plus a 1.3 gust factor. If clamp-on traffic signal is required, designs are based on an arm included angle of 90 degrees or more. Angles of less than approximately 75 degrees will require a special design.

Poles are designed to support one 8'-0" luminaire arm, two 9'-0" internally lighted street name (ILSN) signs and two traffic signal arms with limited length combinations.

Each arm with its related attachment is shown below

Arm	Equivalent DL ⑤	WL EPA ⑤⑥
8' Luminaire Arm	Luminaire 60 lbs	1.6 sq ft
9' ILSN Arm	Sign 85 lbs	11.5 sq ft
50' to 65' Fixed Mount Arm	Signal Loads 310 lbs	52 sq ft
Up to 44' Clamp-on Arm	Signal Loads 180 lbs	32.4 sq ft

⑤ Equivalent dead load plus horizontal wind load applied at the end of arm except ILSN arm, which applied 4.5' from the centerline of the pole.

⑥ Effective projected area (actual area times drag coefficient) for the application of horizontal wind load.

Except as noted in Sheet 1 thru 5 of 5, other details not covered shall refer to Standard Sheet "MA-D" for pole details, "LUM-A" for luminaire arm and connection details, "SNS" for internally lighted street name sign details, and "TS-FD" for anchor bolt and foundation details.

Fabrication shall be in accordance with Item 686, "Traffic Signal Pole Assemblies (Steel)" and with the details, dimensions, and weld procedures shown herein. Weld references call for preapproved weld procedures which the Fabricator must obtain prior to fabrication. Material, fabrication tolerances, and shipping practices shall also meet the requirements of this sheet and Item 686, "Traffic Signal Pole Assemblies (Steel)".

Unless otherwise noted, all parts shall be galvanized in accordance with Item 445, "Galvanizing" after fabrication.

Deviations from the details and dimensions shown herein require submission of shop drawings in accordance with the Item 441, "Steel Structures". Alternate designs are not acceptable.

Installation of damping plate for the long mast arm is not recommended.

Provision of the bracket assembly used to support the traffic signal heads shall be under the direction of the Engineer for approval.

Design also conforms to NCHRP Report 412 for fatigue resistance except that there are no stiffeners at the base plate. TxDOT is conducting tests to determine if stiffeners at the base plate will or will not result in optimal performance; depending upon the results of the tests, poles may need a retrofit to ensure optimal fatigue performance.

Texas Department of Transportation
Traffic Operations Division

TRAFFIC SIGNAL SUPPORT STRUCTURES
LONG MAST ARM ASSEMBLY (50 TO 65 FT) (80 AND 100 MPH WIND ZONE)
LMA(1)-12

Sheet 1 of 5

©TxDOT, JULY: 2000

DN: TxDOT	CK: TxDOT	DW: TxDOT	CK: TxDOT
REVISIONS	CONT	SECT	JOB	HIGHWAY
4-20-01 1-12				
	DIST	COUNTY		SHEET NO.
				21

131A

DISCLAIMER:
The use of this standard is governed by the "Texas Engineering Practice Act". No warranty of any kind is made by TxDOT for any purpose whatsoever. TxDOT assumes no responsibility for the conversion of this standard to other formats or for incorrect results or damages resulting from its use.

DATE:
FILE:

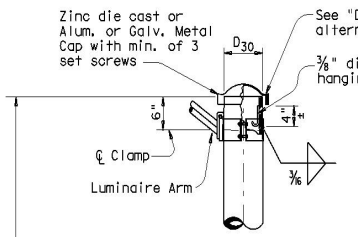

DETAIL A
(for pole with luminaire)

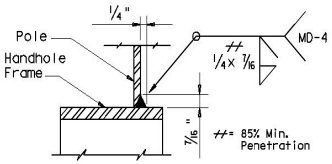

DETAIL H

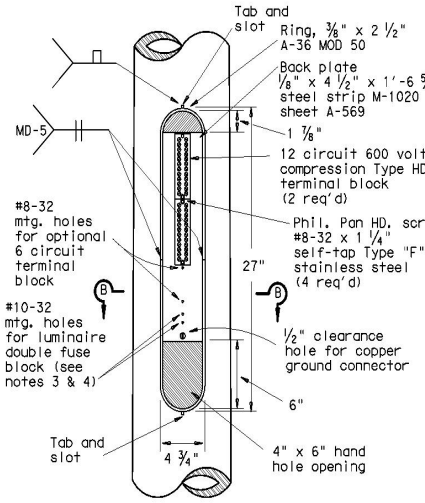

ACCESS COMPARTMENT

MATERIALS	
Round Shafts or Polygonal Shafts (7)	ASTM A595 Gr.A, A588, A1008 HSLAS Gr.50 Class 2, A1011 HSLAS Gr.50 Class 2, A572 Gr.50 or A1011 SS Gr.50 (8)
Plates (7)	ASTM A36, A588, or A572 Gr.50
Connection Bolts	ASTM A325, or A449 except where noted
Pin Bolts	ASTM A325
Pipe (7)	ASTM A53 Gr.B, A501, A1008 HSLAS-F Gr.50, A1011 HSLAS-F Gr.50
Misc. Hardware	Galvanized steel or stainless steel or as noted

(7) ASTM A572, A1008 HSLAS, A1011 HSLAS, A1008 HSLAS-F, A1011 HSLAS-F, or A1011 SS may have higher yield strengths but shall not have less elongation than the grade indicated.

(8) ASTM A1011 SS Gr.50 shall also have a minimum elongation of 18 percent in 8 inches or 23 percent in 2 inches. Material thickness in excess of those stipulated under A1011 SS will be acceptable providing the material meets all other A1011 SS requirements and the requirements of this item.

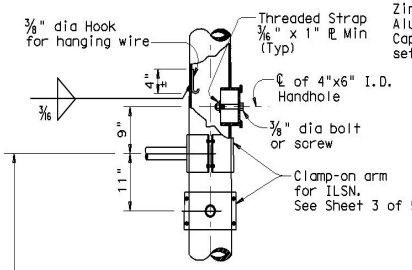

DETAIL B
(If ILSN applied)

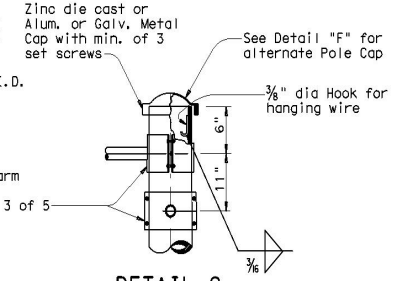

DETAIL C

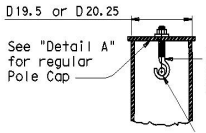

SECTION Y-Y

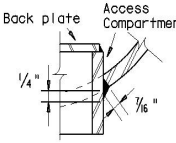

DETAIL J

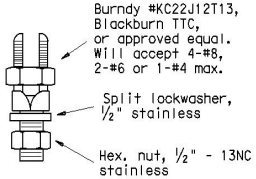

COPPER GROUND CONNECTOR

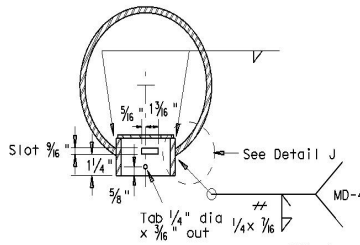

SECTION B-B

Opening for access compartment shall be no more than 1/16 inch wider than the access compartment itself.

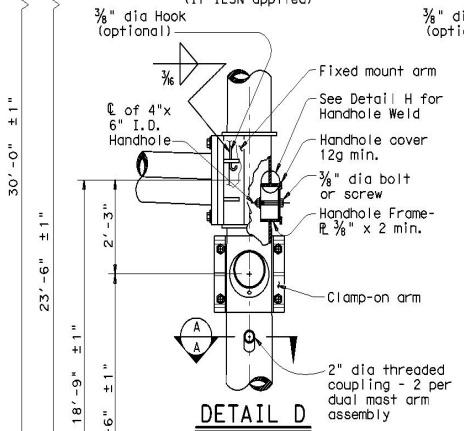

DETAIL D
(for 30' pole with luminaire and ILSN sign)

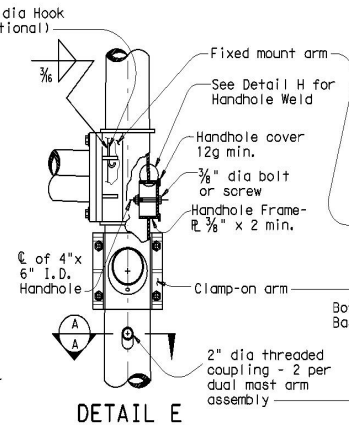

DETAIL E
(for 24' pole with ILSN sign and no luminaire, single or dual mast arm)

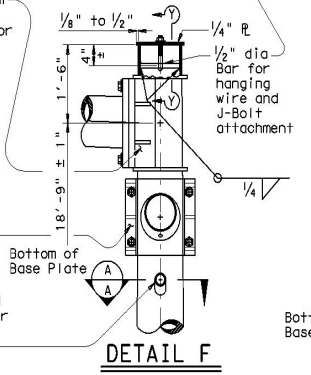

DETAIL F
(for 20.25' pole with no ILSN sign and no luminaire, dual mast arm)

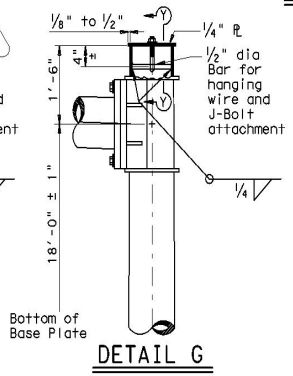

DETAIL G
(for 19.5' pole with no ILSN sign and no luminaire, single mast arm)

ACCESS COMPARTMENT NOTES:

1. The cover shall be one piece formed from ABS plastic, shall be a pearl gray color, and shall be suitable for exposure to harsh sunlight and extreme weather. Cover shall latch with two screw latches and shall fit tightly to the enclosure ring to create a rainproof seal. Latch screws shall be 1/4-20 stainless flat socket head screws with tamper proof feature.
2. The pole manufacturer shall provide with each pole a separate kit consisting of: one cover with two latching assemblies, two terminal strips (Marathon #985GP12CU or approved equal), four #8-32 x 1 1/4" self tapping type "F" stainless steel pan head screws, and one ground connector (Blackburn TTC, Burndy KC22J12T13, or Ilsco SSS-5). The traffic signal contractor shall install the kit items in the field.
3. The screw hole spacing on the enclosure back plate shall be for two Marathon #985GP12 terminal strips, one Marathon #985GP06CU terminal strip, and one Bussmann #BM6032B fuse block.
4. Install one Bussmann #BM6032B, Littelfuse #L60030M-2C, or Ferraz-Shawmut #30352 fuse block for poles where luminaires are to be installed.

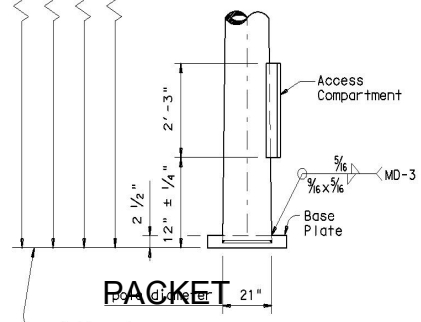

POLE ELEVATION

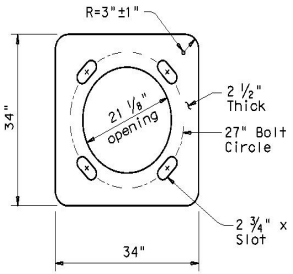

BASE PLATE

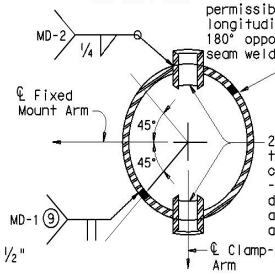

SECTION A-A

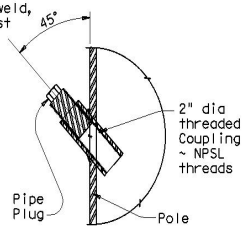

POLE COUPLING DETAIL

(9) Longitudinal seam weld must be oriented within 90° (45° rotation each side) along the fixed mount arm. 60% min penetration required, 100% penetration within 6" of circumferential base weld.

Texas Department of Transportation
Traffic Operations Division

TRAFFIC SIGNAL SUPPORT STRUCTURES
LONG MAST ARM ASSEMBLY (50 TO 65 FT) (80 AND 100 MPH WIND ZONE)

LMA(2)-12

Sheet 2 of 5

© TxDOT July 2000

July 11 2023

DN: JSY	CK: ARC	DW: TGG	CK: JSY
REVISIONS	CONT	SECT	JOB	HIGHWAY
4-20-01 T-12				
	DIST	COUNTY		SHEET NO.
				22

1318

DISCLAIMER: The use of this standard is governed by the "Texas Engineering Practice Act". No warranty of any kind is made by TxDOT for any purpose whatsoever. TxDOT assumes no responsibility for the conversion of this standard to other formats or for incorrect results or damages resulting from its use.

DATE:
FILE:

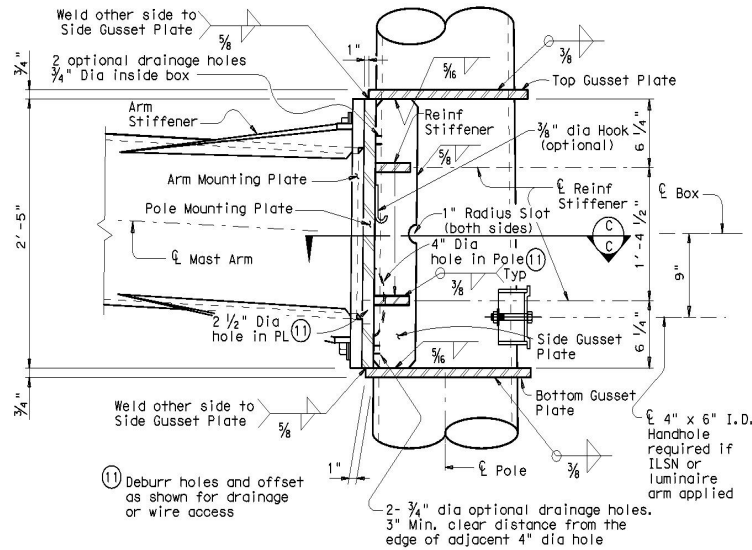

BUILT-UP BOX CONNECTION

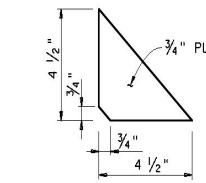

REINFORCING STIFFENER

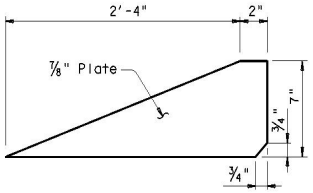

ARM STIFFENER
(Cut to match arm inclination and taper)

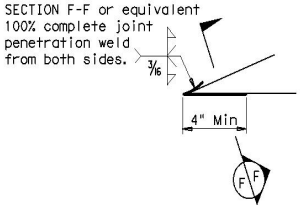

Only 4" length at tip of Arm Stiffener requires a complete joint penetration weld. Smooth weld radius to connect Stiffener. Only a fillet weld is required for the remaining weld length.

DETAIL "K"

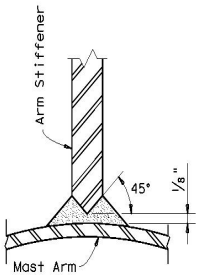

SECTION F-F

Fixed Mount Arm L_F	ROUND POLES (13)					Foundation Type
	D_B	$D_{19.5}$ or $D_{20.25}$	D_{24}	D_{30}	(12) thk	
ft.	in.	in.	in.	in.	in.	
50', 55' 60', 65'	21.0	18.2	17.6	16.8	.3125	48-A

Fixed Mount Arm L_F	ROUND ARMS (13)				
	L_1	D_1	D_2	(12) thk	Rise
ft.	ft.	in.	in.	in.	
50	49	18.5	11.7	.3125	3'- 3"
55	54	18.5	11.0	.3125	3'- 7"
60	59	18.5	10.3	.3125	3'-11"
65	64	18.5	9.6	.3125	4'- 4"

D_B = Pole Base O.D.
$D_{19.5}$ = Pole Top O.D. with no Luminaire and no ILSN (single mast arm)
$D_{20.25}$ = Pole Top O.D. with no Luminaire and no ILSN (dual mast arm)
D_{24} = Pole Top O.D. with ILSN w/out Luminaire
D_{30} = Pole Top O.D. with Luminaire
D_1 = Arm Base O.D.
D_2 = Arm End O.D.
L_1 = Shaft Length
L_F = Fixed Arm Length

(12) Thickness shown is minimum, thicker materials may be used.

(13) Shaft profile 16-sided or 18-sided is considered to be equivalent to round section.

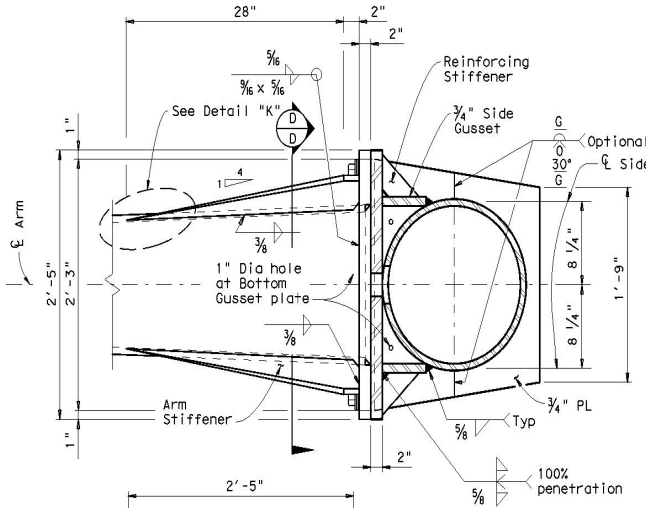

SECTION C-C

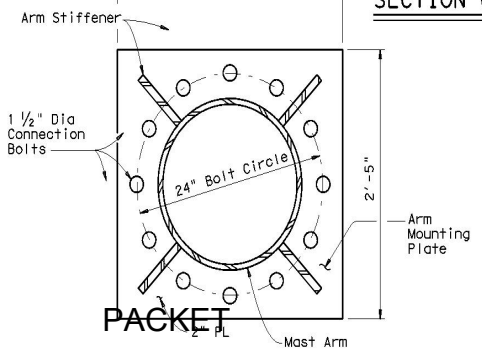

SECTION D-D

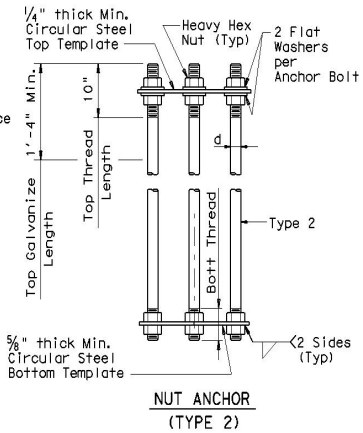

NUT ANCHOR
(TYPE 2)

ANCHOR BOLT ASSEMBLY

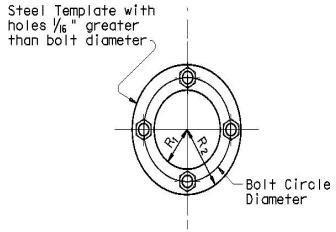

TEMPLATE DETAIL

GENERAL NOTES:

Built-up Box Connection: For the welded arm-to-pole connection as a build-up box configuration illustrated here is an example only, fabricators are required to submit a shop drawing of box connection for approval. The drawing shall specify the details of each box element, welds of arm-to-pole connection, arm-to-plate socket connection, and arm rise creation. Specify the proper location of drain holes along the pole. 2 1/2" dia hole in the pole mounting plate and 4" dia hole in the pole need to be aligned for wiring access or drainage. Arm stiffeners cut to match arm inclination and taper shall also be included.

The deviation from flat for either arm or pole mounting plate shall not exceed 3/32 in., which is measured along the center of mounting plate to a radial distance of 13.5 in. The deformed-from-flat connection between arm and pole mounting plates shall not be allowed if the center of both mounting plates cannot contact directly.

Fixed mount details are used for single mast arm assemblies and for the first arm on dual mast arm assemblies.

ANCHOR BOLT & TEMPLATE SIZE						
Bolt Dia in.	Length ‡	Top Thread	Bottom Thread	Bolt Circle	R_2	R_1
2 1/2"	5'-2"	10"	6 1/2"	27"	16"	11"

‡ Min dimension given, longer bolts are acceptable.

FOUNDATION DESIGN TABLE												
FDN TYPE	DRILLED SHAFT DIA	REINFORCING STEEL		DRILLED SHAFT LENGTH-ft (16), (17), (18)			ANCHOR BOLT DESIGN (14)				FOUNDATION DESIGN LOAD (15)		TYPICAL APPLICATION
		VERT BARS	SPIRAL & PITCH	TEXAS CONE PENETROMETER N blows/ft			ANCHOR BOLT DIA	Fy (ksi)	BOLT CIR DIA	ANCHOR TYPE	MOMENT K-ft	SHEAR Kips	
				10	15	40							
48-A	48"	20 #9	#4 at 6"	21.9	19.5	14.7	2 1/2"	55	27"	2	490	10	50' to 65' Mast arm assembly.

SEE SHEET "TS-FD" FOR ADDITIONAL DETAILS.

(14) Anchor bolt design develops the foundation capacity given under Foundation Design Loads.

(15) Foundation Design Loads are the allowable moments and shears at the base of the structure.

(16) Field Penetrometer readings at a depth of approximately 3 to 5 feet may be used to adjust shaft lengths.

(17) If rock is encountered, the Drilled Shaft shall extend a minimum of two diameters into solid rock.

(18) Decimal lengths in Design Table are to allow interpolation for other penetrometer values. Round to nearest foot for entry into Summary Table.

Texas Department of Transportation
Traffic Operations Division

TRAFFIC SIGNAL SUPPORT STRUCTURES
LONG MAST ARM ASSEMBLY (50 TO 65 FT) (80 AND 100 MPH WIND ZONE)

Sheet 3 of 5 LMA(3)-12

© TxDOT July 2000

DN: JSY	CK: ARC	DW: TGG	CK: JSY
REVISIONS	CONT	SECT	JOB	HIGHWAY
4-20-01 1-12				
DIST	COUNTY	SHEET NO.
		23

131C

PACKET 5.63 July 11 2023

DISCLAIMER: The use of this standard is governed by the "Texas Engineering Practice Act". No warranty of any kind is made by TxDOT for any purpose whatsoever. TxDOT assumes no responsibility for the conversion of this standard to other formats or for incorrect results or damages resulting from its use.

DATE:
FILE:

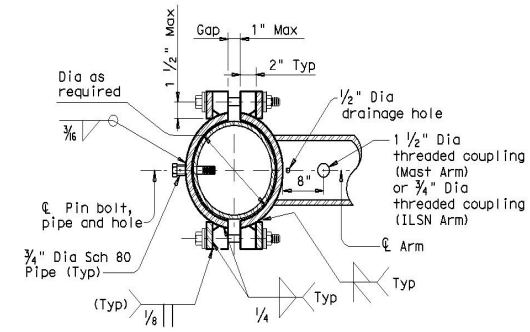

SECTION E-E

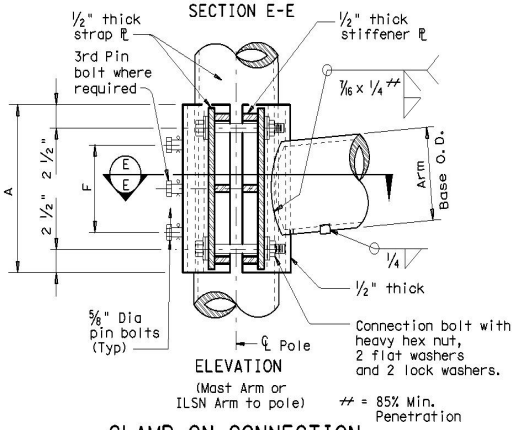

ELEVATION
(Mast Arm or ILSN Arm to pole)

CLAMP-ON CONNECTION

80 MPH WIND

Clamp-on Arm Lc	ROUND ARMS					POLYGONAL ARMS				
	L_1	D_1	D_2	thk (12)	Rise	L_1	D_1	D_2	thk (12)	Rise
ft.	ft.	in.	in.	in.		ft.	in.	in.	in.	
20	19.1	6.5	3.8	.179	1′-9"	19.1	7.0	3.5	.179	1′-8"
24	23.1	7.5	4.3	.179	1′-10"	23.1	7.5	3.5	.179	1′-9"
28	27.1	8.0	4.2	.179	1′-11"	27.1	8.0	3.5	.179	1′-10"
32	31.0	9.0	4.7	.179	2′-1"	31.0	9.0	3.5	.179	2′-0"
36	35.0	9.5	4.6	.179	2′-4"	35.0	10.0	3.5	.179	2′-1"
40	39.0	9.5	4.1	.239	2′-8"	39.0	9.5	3.5	.239	2′-3"
44	43.0	10.0	4.1	.239	2′-11"	43.0	10.0	3.5	.239	2′-6"

100 MPH WIND

Clamp-on Arm Lc	ROUND ARMS					POLYGONAL ARMS				
	L_1	D_1	D_2	thk (12)	Rise	L_1	D_1	D_2	thk (12)	Rise
ft.	ft.	in.	in.	in.		ft.	in.	in.	in.	
20	19.1	8.0	5.3	.179	1′-8"	19.1	8.0	3.5	.179	1′-7"
24	23.1	9.0	5.8	.179	1′-9"	23.1	9.0	3.5	.179	1′-8"
28	27.1	9.5	5.7	.179	1′-10"	27.1	10.0	3.5	.179	1′-9"
32	31.0	9.5	5.2	.239	1′-11"	31.0	9.5	3.5	.239	1′-10"
36	35.0	10.0	5.1	.239	2′-0"	35.0	10.0	3.5	.239	1′-11"
40	39.0	10.5	5.1	.239	2′-3"	39.0	11.0	3.5	.239	2′-1"
44	43.0	11.0	5.1	.239	2′-8"	43.0	11.5	4.0	.239	2′-3"

D1 = Arm Base O.D.
D2 = Arm End O.D.
L1 = Shaft Length
Lc = Clamp-on Arm Length

(12) Thickness shown is minimum, thicker materials may be used.

CLAMP-ON ARM CONNECTION

ILSN Arm Size		A	F	4 Conn. Bolts	⅝" Dia. Pin Bolts
Sch 40 pipe Dia	Thick			Dia	No.
in.	in.	in.	in.	in.	ea
3	.216	10	4	¾	2

Mast Arm Size		A	F	4 Conn. Bolts	⅝" Dia. Pin Bolts
Base Dia	Thick			Dia	No.
in.	in.	in.	in.	in.	ea
6.5	.179	12	6	1	2
7.5	.179	14	8	1	2
8.0	.179	14	8	1	2
9.0	.179	16	10	1	2
9.5	.179	18	12	1 ¼	3
9.5	.239	18	12	1 ¼	3
10.0	.239	18	12	1 ¼	3
10.5	.239	18	12	1 ¼	3
11.0	.239	18	12	1 ¼	3
11.5	.239	18	12	1 ¼	3

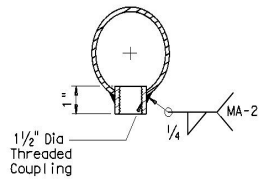

ARM COUPLING DETAIL

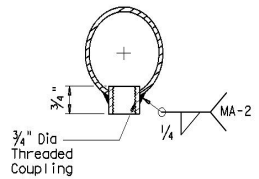

ILSN ARM COUPLING DETAIL

GENERAL NOTES:

Clamp-on details are used for the second arm on dual mast arm assemblies or ILSN arm support. For a clamp-on mast arm, a maximum 1 ½" wide vertical slotted hole may be cut in the front clamp plate to facilitate drainage during galvanizing. The slot shall be centered behind the arm and shall be no longer than the arm diameter minus 1". For an ILSN arm, a 1 ½" diameter hole shall be cut in the front clamp plate for wire access. A matched hole shall be field drilled through the pole to provide wire access after arm is oriented. Deburr both holes.

Where duplicate parts occur on a detail, welds shown for part shall apply to all similar parts on the detail.

Pin bolts are required to prevent rotation of clamp-on arms under design wind forces. Pin bolts shall be ASTM A325 with threads excluded from the shear plane. Pin bolt and ¾" diameter pipe shall have ⅜" diameter holes for a ⅛" diameter galvanized cotter pin. Back clamp plate shall be furnished with a ¾" diameter hole for each pin bolt. An 11/16" diameter hole for each pin bolt shall be field drilled through the pole after arm orientations have been approved by the Engineer.

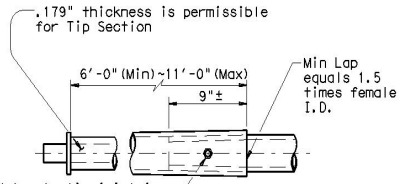

Note: A slip joint is permissible for arms 40′ and greater in length. The slip joint shall be made in the shop, but may be match marked and shipped disassembled.

4 - ¾" Dia holes and 1- ⅝" Dia galv A307 bolt. Tack weld nut to thread projection after making joint. Repair damaged galvanizing in accordance with Item 445, "Galvanizing".

SLIP JOINT DETAIL (CLAMP-ON ARM)

Stainless steel bands (or Cables) and cast bracket as in "Astro-Brac", "Sky Bracket" or "Easy Bracket" with 1 ½" Dia Threaded Coupling.

BRACKET ASSEMBLY

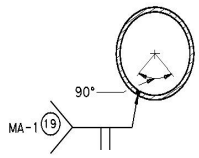

ARM WELD DETAIL

(19) Longitudinal Seam Weld must be oriented within the lower 90° of the signal arm.
60% Min penetration
100% penetration within 6" of circumferential base welds.

Texas Department of Transportation
Traffic Operations Division

TRAFFIC SIGNAL SUPPORT STRUCTURES
LONG MAST ARM ASSEMBLY (50 TO 65 FT) (80 AND 100 MPH WIND ZONE)

Sheet 4 of 5 LMA(4)-12

© TxDOT November 2006

DN: JK	CK: GRB	DW: FDN	CK: CAL
REVISIONS	CONT	SECT	JOB	HIGHWAY
4-20-01 1-12				
	DIST	COUNTY	SHEET NO.
			24

1310

DISCLAIMER: The use of this standard is governed by the "Texas Engineering Practice Act". No warranty of any kind is made by TxDOT for any purpose whatsoever. TxDOT assumes no responsibility for the conversion of this standard to other formats or for incorrect results or damages resulting from its use.

DATE:
FILE:

Shipping Parts List

Ship each pole with the following attached: enlarged hand hole, pole cap, fixed arm connection bolts and washers, and any additional hardware listed in the table.

Nominal Arm Length	30′ Poles with Luminaire: See note above plus: one (or two if ILSN attached) small hand hole, clamp-on simplex	24′ Poles with ILSN: See note above plus one small hand hole	19.50′ (Single Mast Arm) 20.25′ (Dual Mast Arm) Poles with no Luminaire and no ILSN: See note above

Single Mast Arm

Lf ft.	Designation	Quantity	Designation	Quantity	Designation	Quantity
50	50L	1	50S	1	50	
55	55L		55S	1	55	
60	60L		60S		60	
65	65L		65S		65	

Dual Mast Arm

Lf ft.	Lc ft.	Designation	Quantity	Designation	Quantity	Designation	Quantity
50	20	5020L		5020S		5020	
	24	5024L		5024S		5024	
	28	5028L		5028S		5028	
	32	5032L		5032S		5032	
	36	5036L		5036S		5036	
	40	5040L		5040S		5040	
	44	5044L		5044S		5044	
55	20	5520L		5520S		5520	
	24	5524L		5524S		5524	
	28	5528L		5528S		5528	
	32	5532L		5532S		5532	
	36	5536L		5536S		5536	
	40	5540L		5540S		5540	
	44	5544L		5544S		5544	
60	20	6020L		6020S		6020	
	24	6024L		6024S		6024	
	28	6028L		6028S		6028	
	32	6032L		6032S		6032	
	36	6036L		6036S		6036	
	40	6040L		6040S		6040	
	44	6044L		6044S		6044	
65	20	6520L		6520S		6520	
	24	6524L		6524S		6524	
	28	6528L		6528S		6528	
	32	6532L		6532S		6532	
	36	6536L		6536S		6536	
	40	6540L		6540S		6540	
	44	6544L		6544S		6544	

Shipping Parts List

Traffic Signal Arms (Fixed Mount) (1 per pole)
Ship each arm with listed equipment attached

Nominal Arm Length	Type IV Arm (4 Signals) 3 Bracket Assembly and 4 CGB Connectors	
ft.	Designation	Quantity
50	50IV	2
55	55IV	1
60	60IV	
65	65IV	

Luminaire Arms (1 per 30′ pole)

Nominal Arm Length	Quantity
8′ Arm	1

ILSN Arm (Max. 2 per pole) Ship with clamps, bolts and washers

Nominal Arm Length	Quantity
7′ Arm	
9′ Arm	2

Traffic Signal Arms (80 MPH Clamp-On Mount) (1 per pole) Ship each arm with listed equipment attached

Nominal Arm Length	Type I Arm (1 Signal) 2 CGB connector and 1 clamp w/bolts and washers		Type II Arm (2 Signals) 1 Bracket Assembly and 3 CGB connectors, and 1 clamp w/bolts and washers		Type III Arm (3 Signals) 2 Bracket Assembly and 4 CGB connectors, and 1 clamp w/bolts and washers	
ft.	Designation	Quantity	Designation	Quantity	Designation	Quantity
20	20I-80					
24	24I-80		24II-80			
28	28I-80		28II-80			
32			32II-80		32III-80	
36			36II-80		36III-80	
40					40III-80	
44					44III-80	

Traffic Signal Arms (100 MPH Clamp-On Mount) (1 per pole) Ship each arm with listed equipment attached

Nominal Arm	Type I Arm (1 Signal) 2 CGB connector and 1 clamp w/bolts and washers		Type II Arm (2 Signals) 1 Bracket Assembly and 3 CGB connectors, and 1 clamp		Type III Arm (3 Signals) 2 Bracket Assembly and 4 CGB connectors, and 1 clamp	
ft.	Designation	Quantity	Designation	Quantity	Designation	Quantity
20	20I-100					
24	24I-100		24II-100			
28	28I-100		28II-100			
32			32II-100		32III-100	
36			36II-100		36III-100	
40					40III-100	
44					44III-100	

Anchor Bolt Assemblies (1 per pole)

Anchor Bolt Diameter	Anchor Bolt Length	Quantity
2 1/2 "	5′ - 3"	3

Each anchor bolt assembly consists of the following: Top and bottom templates, 4 anchor bolts, 8 nuts, 8 flat washers and 4 nut anchor devices (type 2) per Standard Drawing "TS-FD". Templates may be removed for shipment.

Foundation Summary Table **

Location Ident.	Avg. N Blow/ft.	No. Each	Drill Shaft *** Length (feet)
			48-A
P-2	10	1	22
P-4	10	1	22
P-5	10	1	22
Total Drill Shaft Length			66

PACKET

Notes

** Foundations may be listed separately or grouped according to similarity of location and type. Quantities are for the Contractor's information only.

*** Decimal lengths in Design Table are to allow interpolation for other penetrometer values. Round to nearest foot for entry into Summary Table.

Abbreviations
Lf= Fixed Arm Length
Lc= Clamp-on Arm Length (44′ Max.)



3-15-23

5.65

Texas Department of Transportation
Traffic Operations Division

LONG MAST ARM ASSEMBLY PARTS LIST

LMA(5)-12

Sheet 5 of 5

© TxDOT November 2006

DN: JK	CK: GRB	DW: FDN	CK: CAL

REVISIONS	CONT	SECT	JOB	HIGHWAY
4-20-01				
1-12				

DIST	COUNTY	SHEET NO.
		25

131E

July 11 2023

DISCLAIMER:
The use of this standard is governed by the "Texas Engineering Practice Act". No warranty of any kind is made by TxDOT for any purpose whatsoever. TxDOT assumes no responsibility for the conversion of this standard to other formats or for incorrect results or damages resulting from its use.

DATE:
FILE:

GENERAL NOTES FOR ALL ELECTRICAL WORK

1. The location of all conduits, junction boxes, ground boxes, and electrical services is diagrammatic and may be shifted to accommodate field conditions.

2. Provide new and unused materials. Ensure that all materials and installations comply with the applicable articles of the National Electrical Code (NEC), TxDOT standards and specifications, National Electrical Manufacturers Association (NEMA), and are listed by Underwriters Laboratories (UL) or a Nationally Recognized Testing Lab (NRTL). NRTLs such as Canadian Standard Association (CSA), Intertek Testing Services NA Inc., or FM Approvals LLC can be considered equivalent to UL. Where reference is made to NEMA listed devices, International Electrotechnical Commission (IEC) listed devices will not be considered an acceptable equal to a NEMA listed device. Acceptable devices may have both a NEMA and IEC listing. Faulty fabrication or poor workmanship in any material, equipment, or installation is justification for rejection. Replace or reinstall rejected material or equipment at no additional cost to the Department.

3. Miscellaneous nuts, bolts and hardware, except for high strength bolts, may be stainless steel when plans specify galvanized, provided the bolt size is ½ in. or less in diameter.

4. Provide the following test equipment as required by the Engineer to confirm compliance with the contract and the NEC: voltmeter, ammeter, megohm meter (1000 volt DC), ground resistance tester, torque wrenches, and torque screwdrivers. Ensure all equipment has been properly calibrated within the last year. Provide calibration certification to the Engineer upon request. Operate test equipment during inspection as requested by the Engineer.

5. Install grounding as shown on the plans and in accordance with the NEC. Ensure all metallic conduits; metal poles; luminaires; and metal enclosures are bonded to the equipment grounding conductor. Provide stranded bare copper or green insulated grounding conductors. Ground rods, connectors, and bonding jumpers are subsidiary to the various bid items.

6. When required by the Engineer, notify the Department in writing of materials from the Material Producers List (MPL) intended for use on each project. Prequalified materials are listed on the MPL on TxDOT's website under "Roadway Illumination and Electrical Supplies." No substitutions will be allowed for materials on this list.

CONDUIT

A. MATERIALS

1. Provide conduit, junction boxes, fittings, and hardware as per TxDOT Departmental Material Specification (DMS) 11030 "Conduit" and Item 618 "Conduit" of TxDOT's "Standard Specifications For Construction And Maintenance Of Highways, Streets, And Bridges," latest edition. Provide conduits listed under Item 618 on the MPL under "Roadway Illumination and Electrical Supplies." Provide conduit types according to the descriptive code or as shown on the plans. Do not substitute other types of conduits for those shown. Provide liquidtight flexible metal conduit (LFMC) when flexible conduit is called for on galvanized steel rigid metallic conduit (RMC) systems. Provide liquidtight flexible nonmetallic conduit (LFNC) when flexible conduit is called for on polyvinyl chloride (PVC) systems.

2. Provide galvanized steel RMC for all exposed conduits, unless otherwise shown on the plans. Properly bond all metal conduits.

3. Unless otherwise shown on the plans, provide junction boxes with a minimum size as shown in the following table, which applies to the greatest number of conductors entering the box through one conduit with no more than four conduits per box. When a mixture of conductor sizes is present, count the conductors as if all are of the larger size. For situations not applicable to the table, size junction boxes in accordance with NEC.

AWG	3 CONDUCTORS	5 CONDUCTORS	7 CONDUCTORS
#1	10" x 10" x 4"	12" x 12" x 4"	16" x 16" x 4"
#2	8" x 8" x 4"	10" x 10" x 4"	12" x 12" x 4"
#4	8" x 8" x 4"	10" x 10" x 4"	10" x 10" x 4"
#6	8" x 8" x 4"	8" x 8" x 4"	10" x 10" x 4"
#8	8" x 8" x 4"	8" x 8" x 4"	8" x 8" x 4"

4. Junction boxes with an internal volume of less than 100 cu. in. and supported by entering raceways must have threaded entries or hubs identified for the intended purpose and supported by connection of two or more rigid metal conduits. Secure conduit within 3 ft. of the enclosure or within 18 in. of the enclosure if all conduit entries are on the same side. Mechanically secure all junction boxes with an internal volume greater than 100 cu. inches.

5. Provide hot dipped galvanized cast iron or sand cast aluminum outlet boxes for junction boxes containing only 10 AWG or 12 AWG conductors. Do not use die cast aluminum boxes. Size outlet boxes according to the NEC.

6. Do not use intermediate metal conduit (IMC) or electrical metallic tubing (EMT) unless specifically required by the plan sheets. When EMT is called for, provide junction boxes made from galvanized steel sheeting, listed and approved for outdoor use, unless otherwise noted on the plans. Size all galvanized steel junction boxes in accordance with the NEC. Provide junction boxes for IMC conduit systems that meet the same requirements for junction boxes used with RMC systems.

7. Provide PVC junction boxes intended for outdoor use on PVC conduit systems, unless otherwise noted on the plans.

8. Provide PVC elbows in PVC conduit systems, unless otherwise shown on the plans. Use only a flat, high tensile strength polyester fiber pull tape for pulling conductors through the PVC conduit system. When galvanized steel RMC elbows are specifically called for in the plans and any portion of the RMC elbow is buried less than 18 in., ground the RMC elbow by means of a grounding bushing on a rigid metal extension. Grounding of the rigid metal elbow is not required if the entire RMC elbow is encased in a minimum of 2 in. of concrete. PVC extensions are allowed on these concrete encased rigid metal elbows. RMC or PVC elbows are subsidiary to various bid items.

9. When required, provide High-Density Polyethylene (HDPE) conduit with factory installed internal conductors according to Item 622 "Duct Cable." At the Contractor's request and with approval by the Engineer, substitute HDPE conduit with no conductors for bored schedule 40 or schedule 80 PVC conduit bid under Item 618. Ensure bored HDPE substituted for PVC is schedule 40 and of the same size PVC called for in the plans. Ensure the substituted HDPE meets the requirements of Item 622, except that the conduit is supplied without factory-installed conductors. Make the transition of the HDPE conduit to PVC (or RMC elbow when required) at the bore pit. Provide conduit of the size and schedule as shown on the plans. Do not extend substituted conduit into ground boxes or foundations. Provide PVC or galvanized steel RMC elbows as called for at all ground boxes and foundations.

10. Use two-hole straps when supporting 2 in. and larger conduits. On electrical service poles, properly sized stainless steel or hot dipped galvanized one-hole standoff straps are allowed on the service riser conduit.

B. CONSTRUCTION METHODS

1. Provide and install expansion joint conduit fittings on all structure-mounted conduits at the structure's expansion joints to allow for movement of the conduit. In addition, provide and install expansion joint fittings on all continuous runs of galvanized steel RMC conduit externally exposed on structures such as bridges at maximum intervals of 150 ft. When requested by the project Engineer, supply manufacturer's specification sheet for expansion joint conduit fittings. Repair or replace expansion joint fittings that do not allow for movement at no additional cost to the Department. Provide the method of determining the amount of expansion to the Engineer upon request. Do not use LFMC or LFNC as a substitute for the required expansion conduit fittings.

2. Space all conduit supports at maximum intervals of 5 ft. Install conduit spacers when attaching metal conduit to surface of concrete structures. See "Conduit Mounting Options" on ED(2). Install conduit support within 3 ft. of all enclosures and conduit terminations.

3. Do not attach conduit supports directly to pre-stressed concrete beams except as shown specifically in the plans or as approved by the Engineer.

4. Unless otherwise shown on the plans, jack or bore conduit placed beneath existing roadways, driveways, sidewalks, or after the base or surfacing operation has begun. Backfill and compact the bore pits below the conduit per Item 476 "Jacking, Boring, or Tunneling Pipe or Box" prior to installing conduit or duct cable to prevent bending of the connections.

5. When placing conduit in the sub-grade of new roadways, backfill all trenches with excavated material unless otherwise noted on the plans. When placing conduit in the sub-base of new roadways, backfill all trenches with cement-stabilized base as per requirements of Items 110 "Excavation", 400 "Excavation and Backfill for Structures", 401 "Flowable Backfill", 402 "Trench Excavation Protection", and 403 "Temporary Special Shoring."

6. Provide and place warning tape approximately 10 in. above all trenched conduit as per Item 618.

7. During construction, temporarily cap or plug open ends of all conduit and raceways immediately after installation to prevent entry of dirt, debris and animals. Temporary caps constructed of durable duct tape are allowed. Tightly fix the tape to the conduit opening. Clean out the conduit and prove it clear in accordance with Item 618 prior to installing any conductors.

8. Ensure conduit entry into the top of any enclosure is waterproof by installing conduit sealing hubs or using boxes with threaded bosses. This includes surface mounted safety switches, meter cans, service enclosures, auxiliary enclosures and junction boxes. Grounding bushings on water tight sealing hubs are not required.

9. Fit the ends of all PVC conduit terminations with bushings or bell end fittings. Provide and install a grounding type bushing on all metal conduit terminations.

10. Install a bonding jumper from each grounding bushing to the nearest ground rod, grounding lug, or equipment grounding conductor. Ensure all bonding jumpers are the same size as the equipment grounding conductor. Bonding of conduit used as a casing under roadways for duct cable is not required, if the duct extends the full length through the casing.

11. At all electrical services, install a 6 AWG solid copper grounding electrode conductor.

12. Place conduits entering ground boxes so that the conduit openings are between 3 in. and 6 in. from the bottom of the box. See the ground box detail on sheet ED(4).

13. Seal ends of all conduits with duct seal, expandable foam, or by other methods approved by the Engineer. Seal conduit immediately after completion of conductor installation and pull tests. Do not use duct tape as a permanent conduit sealant. Do not use silicone caulk as a conduit sealant.

14. File smooth the cut ends of all mounting strut and conduit. Before installing, paint the field cut ends of all mounting strut and RMC (threaded or non-threaded) with zinc rich paint (94% or more zinc content) to alleviate overspray. Use zinc rich paint to touch up galvanized material as allowed under Item 445 "Galvanizing." Do not paint non-galvanized material with a zinc rich paint as an alternative for materials required to be galvanized.

Texas Department of Transportation | Traffic Operations Division Standard

ELECTRICAL DETAILS CONDUITS & NOTES

ED(1)-14

FILE: ed1-14.dgn	DN:	CK:	DW:	CK:
©TxDOT October 2014	CONT	SECT	JOB	HIGHWAY
REVISIONS				
	DIST	COUNTY		SHEET NO.
				26

71A

PACKET 5.66 July 11, 2023

DISCLAIMER:
The use of this standard is governed by the "Texas Engineering Practice Act". No warranty of any kind is made by TxDOT for any purpose whatsoever. TxDOT assumes no responsibility for the conversion of this standard to other formats or for incorrect results or damages resulting from its use.

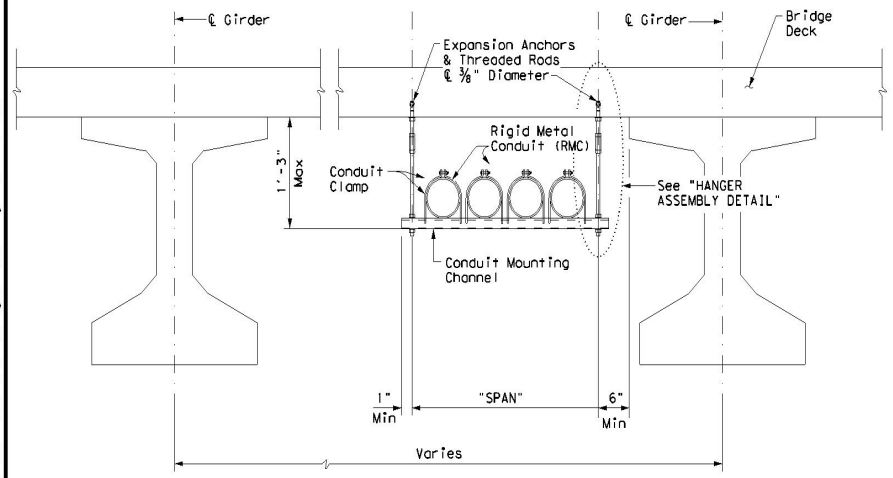

CONDUIT HANGING DETAIL

CONDUIT MOUNTING CHANNEL		
"SPAN"	"W" x "H"	"T"
less than 2'	1 ⅝" x 1 ⅜"	12 Ga.
2'-0" to 2'-6"	1 ⅝" x 1 ⅝"	12 Ga.
>2'-6" to 3'-0"	1 ⅝" x 2 7/16"	12 Ga.

Channels with round or short slotted hole patterns are allowed, if the load carrying capacity is not reduced by more than 15%.

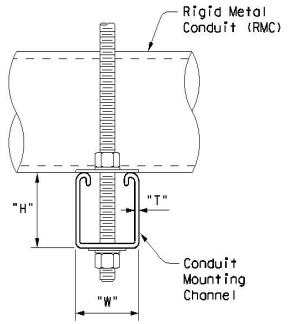

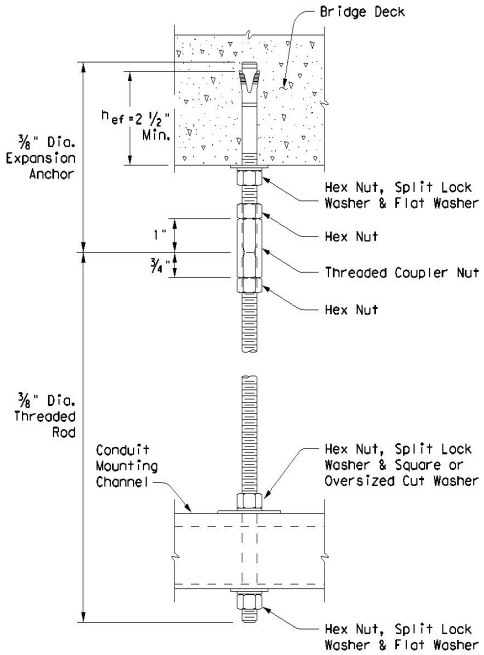

HANGER ASSEMBLY DETAIL

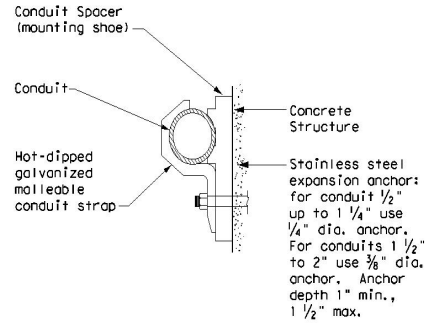

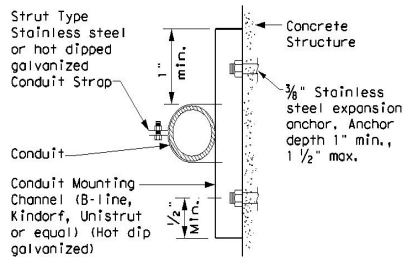

CONDUIT MOUNTING OPTIONS

Attachment to concrete surfaces
See ED(1)B.2

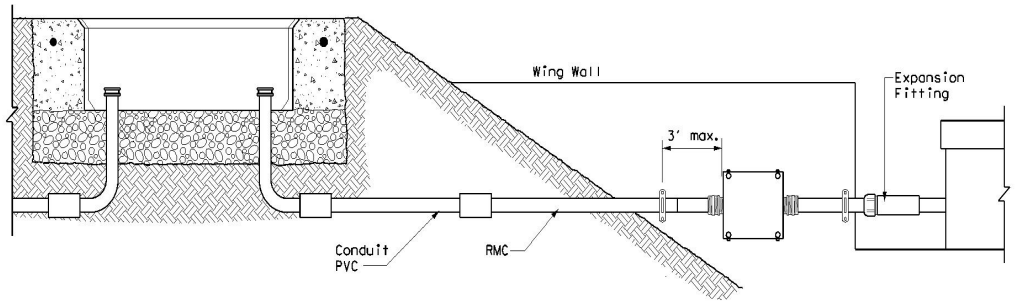

TYPICAL CONDUIT ENTRY TO BRIDGE STRUCTURE DETAIL

EXPANSION ANCHOR NOTES FOR BRIDGE DECK ATTACHMENT

1. Use torque controlled mechanical expansion anchors that are approved for use in cracked concrete by the International Code Council, Evaluation Service (ICC-ES). The chosen anchor product shall have a designated ICC-ES Evaluation Report number, and its approval status shall be maintained on the ICC-ES website under Division 031600 for Concrete Anchors.
2. Unless otherwise approved by the Engineer: do not use adhesive anchors; do not use expansion anchors that are not included in the ICC-ES approval list; and do not use expansion anchors that are only approved for use in uncracked concrete.
3. Use anchors manufactured with stainless steel expansion wedges. Anchors manufactured with carbon steel expansion wedges are not allowed. Anchor bodies can be either zinc-plated carbon steel or stainless steel. For application in marine environment, both the anchor body and expansion wedge shall be stainless steel.
4. Install anchors as shown on the plans and in accordance with the anchor manufacturer's published installation instructions. Arrange a field demonstration test to evaluate the procedures and tools. The test shall be witnessed and approved by the Engineer prior to furnishing anchors on the structure.
5. Prior to hole drilling, use rebar locator to ensure clearing of existing deck strands or reinforcement. Install anchors to ensure a minimum effective embedment depth, (h_{ef}), as shown. Increase (h_{ef})as needed to ensure sufficient thread length for proper torqueing and tightening of anchors.
6. Use anchors of minimum 1600 Lbs tensile capacity (minimum of steel, concrete breakout, and concrete pullout strengths as determined by ACI 318 Appendix D) at the required minimum embedment depth (h_{ef}). No lateral loads shall be introduced after conduit installation.

Texas Department of Transportation

Traffic Operations Division Standard

ELECTRICAL DETAILS
CONDUIT SUPPORTS

ED(2)-14

FILE: ed2x14.dgn	DN: TxDOT	CK: TxDOT	DW: TxDOT	CK: TxDOT
©TxDOT October 2014	CONT	SECT	JOB	HIGHWAY
REVISIONS	DIST	COUNTY		SHEET NO. 27

DATE:
FILE:

DISCLAIMER:
The use of this standard is governed by the "Texas Engineering Practice Act". No warranty of any kind is made by TxDOT for any purpose whatsoever. TxDOT assumes no responsibility for the conversion of this standard to other formats or for incorrect results or damages resulting from its use.

DATE:
FILE:

ELECTRICAL CONDUCTORS

A. MATERIAL INFORMATION

1. Provide Type XHHW insulated conductors in accordance with Departmental Material Specification (DMS)11040 "Conductors" and Item 620 "Electrical Conductors." Provide conductors as listed on the Material Producers List (MPL) on the Department web site under "Roadway Illumination and Electrical Supplies" Item 620. Color code insulated conductors in conformance with the NEC. Identify grounded (neutral) conductors with white insulation. Identify grounding conductors (ground wires) with green insulation or bare conductors. Identify ungrounded (hot) conductors with any color insulation except green, white, or gray. Keep color scheme consistent throughout the wiring system. Identify conductors 6 American Wire Gauge (AWG) and smaller by continuous color jacket. Identify electrical conductors 4 AWG and larger by continuous color jacket or by colored tape. When identifying conductors with colored tape, mark at least 6 in. of the conductor's insulation with half laps of tape.
2. Provide a solid copper 6 AWG grounding electrode conductor to bond the electrical service equipment to the concrete encased grounding electrode or the ground rod at the service location. Connect the grounding electrode conductor to the ground rod with a UL listed connector in accordance with DMS 11040. Connect the grounding electrode conductor to the concrete encased grounding electrode as shown in the plans.
3. Where two or more circuits are present in one conduit or enclosure, permanently identify the conductors of each branch circuit by attaching a non-metallic tag around both circuit conductors at each accessible location. Provide tags with two straps, large enough to indicate circuit number, letter, or other identification as shown in the plans. Print circuit identification on the tag with a permanent marker.
4. Use listed compression or screw type pressure connectors, terminal blocks, or split bolt connectors for splicing as specified in DMS 11040. Use hot melt adhesive tape to fill the gap and seal the ends of heat shrink tubing. Provide UL listed gel-filled insulating splice covers. Splicing materials, insulating materials, breakaway disconnects, splice covers, and fuse holders are subsidiary to various bid items.

B. CONSTRUCTION METHODS

1. Use only a flat, high tensile strength polyester fiber pull tape for pulling conductors through the conduit system. After installing conductors in conduit, perform conductor pull test. If a conductor cannot be freely pulled, make any needed alterations or repairs at no additional cost to the department. Perform insulation resistance tests in accordance with Item 620. Coordinate with the Engineer to witness the tests.
2. Leave 2 ft. minimum, 3 ft. maximum length for each conductor up to the splice in ground boxes. Leave 3 ft. minimum, 4 ft. maximum length of conductor in ground boxes when pulled through with no splice. Leave 1 ft. minimum, 1.5 ft. maximum length of conductor at enclosures, weatherheads and pole bases.
3. Make splices only in junction boxes, ground boxes, pole bases, or electrical enclosures and use only listed compression or screw type pressure connectors, terminal blocks, or split bolt connectors. Insulate splices with heavy wall heat shrink tubing or gel-filled insulating splice covers to provide a watertight splice. Overlap conductor insulation with heat shrink tubing a minimum of 2 in. past both sides of the splice. Where heat shrink tubing may not shrink sufficiently to provide a watertight seal around the individual conductors, prior to heating the tubing, increase the diameter of the conductor insulation using hot melt adhesive tape to provide a watertight seal between the individual conductors and the heat shrink tubing. Ensure the tape extends past the heat shrink tubing. Use hot melt adhesive tape to fill the gap and seal the ends of heat shrink tubing. Heat shrink tubing that appears to have been burned, or overheated, is considered defective and must be replaced.
4. Size and install gel-filled insulating splice covers according to manufacturer's specifications when used in place of heat shrink tubing.
5. Wire nuts with factory applied waterproof sealant may be used for 8 AWG or smaller conductors in above ground junction boxes, but not in pole bases or ground boxes. Install wire nuts in an upright position to prevent the accumulation of water.
6. Support conductors in illumination poles with a J-hook at the top of the pole.
7. When terminating conductors, remove the insulation and jacketing material without nicking the individual strands of the conductor. Conductors with nicked individual conductor strands or removed strands will be considered damaged.
8. Replace conductors and cables that are damaged beyond repair or that fail an insulation resistance test at no additional cost to the department.
9. Do not repair damaged conductors with duct tape, electrical tape, or wire nuts. Use only approved splicing methods.
10. Do not terminate more than one conductor under a single connector, unless the connector is rated for multiple conductors. Do not exceed the pressure connector's listing for maximum number and size of conductors allowed.
11. Install breakaway connectors on conductors bid under Item 620 whenever those conductors pass through a breakaway support device. Follow manufacturer's instructions when terminating conductors to breakaway connectors. Properly torque threaded connections. Proper terminations are critical to the safe operation of breakaway devices. Use waterproofing boots on breakaway connectors to fit snugly around the conductor to ensure waterproof connection. Only one conductor may enter a single opening in a boot. Provide waterproof boots with the correct number of openings. Leave unused openings factory sealed. Use prequalified breakaway connectors as shown on the MPL.
12. Provide and install a separate stranded equipment grounding conductor (EGC) in all conduits that contain circuit wiring of 50 volts or more. Unless shown elsewhere, size the EGC to be the same size as the largest current carrying conductor contained in the conduit. Ensure all EGCs are bonded together at every accessible location. For traffic signal installations, provide a minimum size 8 AWG EGC. The EGC is paid for under Item 620.

C. TEMPORARY WIRING

1. Install temporary conductors and electrical equipment in accordance with the NEC article "Temporary Installations" and Department standard sheets.
2. Provide a ground fault circuit interrupter (GFCI) for power outlets for portable electrical equipment, power tools, ice machines, ice storage bins and refrigerators located outdoors at grade. GFCI may be any one of the following: molded cord and plug set, receptacle, or circuit breaker type.
3. Use listed wire nuts with factory applied sealant for temporary wiring where approved.
4. Enclose conductor splices within a listed enclosure or ground box, or ensure the splices are more than 10 ft. above grade vertically and more than 5 ft. horizontally from any metal structure. Where installing temporary conductors in areas subject to vehicle traffic or mobile construction equipment, ensure the vertical clearance to ground is at least 18 ft. when measured at the lowest point. Ground messenger wires that support power conductors in conformance with the NEC.
5. Protect and when necessary repair any existing electrical conduits uncovered during the construction process in a timely manner and in conformance with the NEC.

GROUND RODS & GROUNDING ELECTRODES

A. MATERIAL INFORMATION

1. Provide and install a grounding electrode at electrical services. Provide ground rods according to DMS 11040 and the plans. Larger diameter or longer length rods may be called for in some specific locations, see the individual plans sheets. Concrete encased grounding electrodes may be called for in specific locations including electrical service, see individual plan sheets.

B. CONSTRUCTION METHODS

1. Furnish auxiliary ground rods for lightning protection and install in soil, concrete, or both, as called for in the plans. For ground rods installed in concrete, ensure the connection of the conductor to the ground rod is readily accessible for inspection or repairs. For ground rods installed in soil, ensure that the upper end is between 2 to 4 in. below finished grade.
2. Do not place ground rods in the same drilled hole as a timber pole.
3. Install ground rods so the imprinted part number is at the upper end of the rod.
4. Remove all non-conductive coatings such as concrete splatter from the rod at the clamp location.
5. Route all conductors as short and straight as possible for connection to lightning protection ground rods. When a bend is required, ensure a minimum radius bend of four inches for these conductors.
6. Unless otherwise called for in the plans, protect grounding electrode conductors with non-metallic conduit. When protecting grounding electrode conductors with metal conduit, provide and install a grounding type bushing and properly sized bonding jumper on each end of the metal conduit.
7. Written authorization is required before installing a ground rod in a horizontal trench for rocky soil or a solid rock bottom.

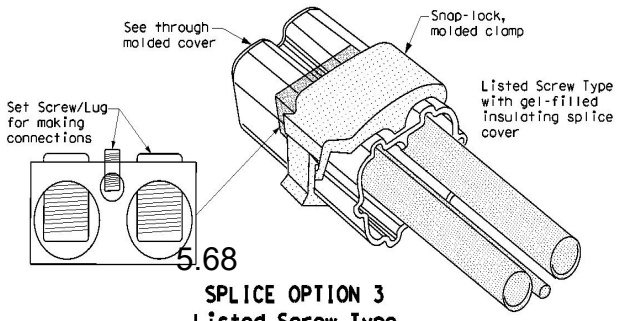

SPLICE OPTION 3
Listed Screw Type

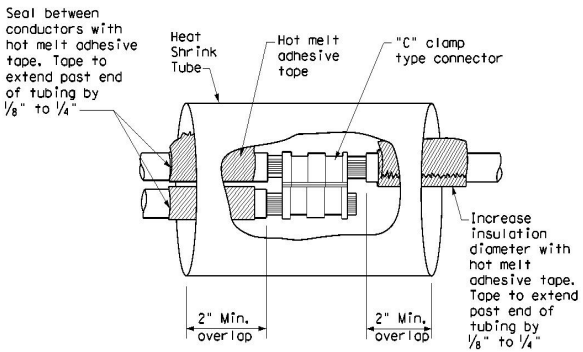

SPLICE OPTION 1
Compression Type

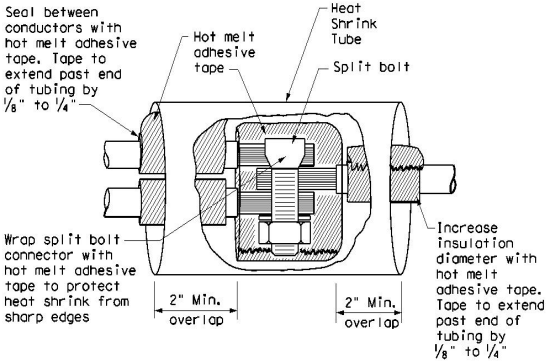

SPLICE OPTION 2
Split Bolt Type

Texas Department of Transportation

Traffic Operations Division Standard

ELECTRICAL DETAILS CONDUCTORS

ED(3)-14

July 11, 2023

FILE: ed3-14.dgn	DN: TxDOT	CK: TxDOT	DW: TxDOT	CK: TxDOT
©TxDOT October 2014	CONT	SECT	JOB	HIGHWAY
REVISIONS				
	DIST	COUNTY		SHEET NO.
				28

71C

5.68

CONTROL

DISCLAIMER:
The use of this standard is governed by the "Texas Engineering Practice Act". No warranty of any kind is made by TxDOT for any purpose whatsoever. TxDOT assumes no responsibility for the conversion of this standard to other formats or for incorrect results or damages resulting from its use.

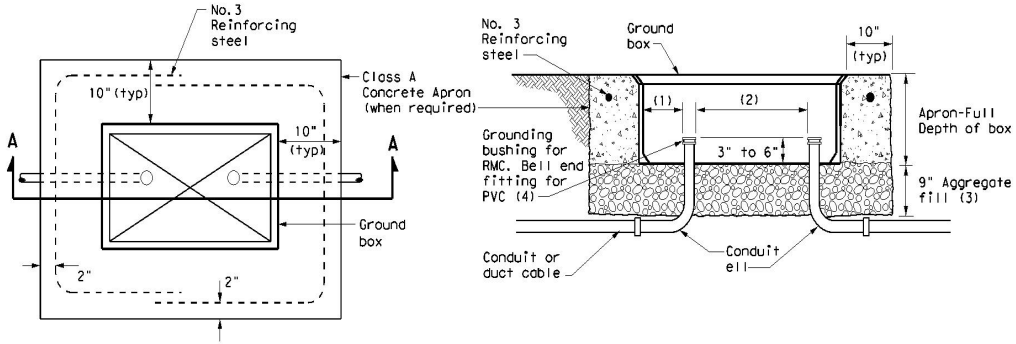

PLAN VIEW

SECTION A - A

APRON FOR GROUND BOX

(1) Uniformly space ends of conduits within the ground box. Position ends of conduits so that ground box walls do not interfere with the installation of grounding bushings or bell end fittings.

(2) Maintain sufficient space between conduits to allow for proper installation of bushing.

(3) Place aggregate under the box, not in the box. Aggregate should not encroach on the interior volume of the box.

(4) Install a grounding bushing on the upper end of all RMC terminating in a ground box. Ground RMC elbows when any part of the elbow is less than 18 in. below the bottom of the ground box. Install a PVC bushing or bell end fitting on the upper end of all PVC conduits terminating in a ground box.

GROUND BOX DIMENSIONS	
TYPE	OUTSIDE DIMENSIONS (INCHES) (Width x Length X Depth)
A	12 X 23 X 11
B	12 X 23 X 22
C	16 X 29 X 11
D	16 X 29 X 22
E	12 X 23 X 17

GROUND BOX COVER DIMENSIONS								
TYPE	DIMENSIONS (INCHES)							
	H	I	J	K	L	M	N	P
A, B & E	23 1/4	23	13 3/4	13 1/2	9 7/8	5 1/8	1 3/8	2
C & D	30 1/2	30 1/4	17 1/2	17 1/4	13 1/4	6 3/4	1 3/8	2

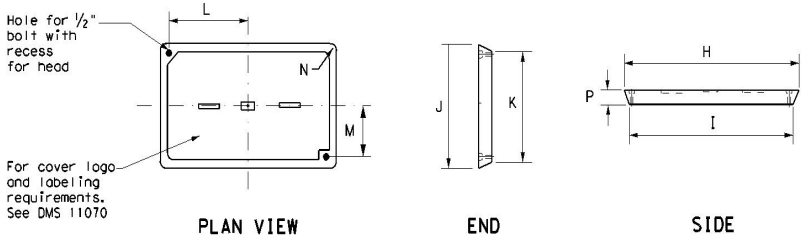

PLAN VIEW

END

SIDE

GROUND BOX COVER

GROUND BOXES

A. MATERIALS

1. Provide polymer concrete ground boxes measuring 16x30x24 in. (WxLxD) or smaller in accordance with Departmental Material Specification (DMS) 11070 "Ground Boxes" and Item 624 "Ground Boxes."
2. Provide Type A, B, C, D, and E ground boxes as shown in the plans, and as listed on the Material Producers List (MPL) on the Department web site under "Roadway Illumination and Electrical Supplies," Item 624.
3. Ensure ground box cover is correctly labeled in accordance with DMS 11070.
4. Provide larger ground boxes in accordance with Item 624 and as shown in the plans.

B. CONSTRUCTION METHODS

1. Remove all gravel and dirt from conduit. Cap all conduits prior to placing aggregate and setting ground box. Provide Grade 3 or 4 coarse aggregate as shown on Table 2 of Item 302 "Aggregates for Surface Treatments." Ensure aggregate bed is in place and at least 9 inches deep, prior to setting the ground box. Install ground box on top of aggregate.
2. Cast ground box aprons in place. Reinforcing steel may be field bent. Ensure the depth of concrete for the apron extends from finished grade to the top of the aggregate bed under the box. Ground box aprons, including concrete and reinforcing steel, are subsidiary to ground boxes when called for by descriptive code.
3. Keep bolt holes in the box clear of dirt. Bolt covers down when not working in ground boxes.
4. Install all conduits and ells in a neat and workmanlike manner. Uniformly space conduits so grounding bushings and bell end fittings can easily be installed.
5. Temporarily seal all conduits in the ground box until conductors are installed.
6. Permanently seal conduits immediately after the completion of conductor installation and pull tests. Permanently seal the ends of all conduits with duct seal, expandable foam, or other method as approved. Do not use duct tape as a permanent conduit sealant. Do not use silicone caulk as a sealant.
7. When a ground rod is present in a ground box, bond all equipment grounding conductors together and to the ground rod with listed connectors.
8. When a type B or D ground box is stacked to meet volume requirements, it is allowable to cut an appropriately sized hole for conduit entry in the side wall at least 18 inches below grade.
9. If an existing ground box in the contract has a metal cover, bond the cover to the equipment grounding conductor with a 3 ft. long stranded bonding jumper the same size as the grounding conductor. The bonding jumper is subsidiary to various bid items. Verify existing ground boxes with metal covers are shown on the plans, with notes fully describing the work required.
10. If other ground boxes with metal covers are within the project limits but are not part of the contract, the Engineer may direct the Contractor to bond the metal covers, identifying the specific boxes in writing. This work will be paid for separately.
11. Bond metal ground box covers to the grounding conductor with a tank ground type lug.

Texas Department of Transportation

Traffic Operations Division Standard

ELECTRICAL DETAILS GROUND BOXES

ED(4)-14

FILE: ed4-14.dgn	DN: TxDOT	CK: TxDOT	DW: TxDOT	CK: TxDOT
©TxDOT October 2014	CONT	SECT	JOB	HIGHWAY
REVISIONS				
	DIST	COUNTY		SHEET NO.
				29

DATE: July 11, 2023
FILE:

71D

DISCLAIMER:
The use of this standard is governed by the "Texas Engineering Practice Act". No warranty of any kind is made by TxDOT for any purpose whatsoever. TxDOT assumes no responsibility for the conversion of this standard to other formats or for incorrect results or damages resulting from its use.

DATE:
FILE:

ELECTRICAL SERVICES NOTES

1. Provide new materials. Ensure installation and materials comply with the applicable provisions of the National Electrical Code (NEC) and National Electrical Manufacturers Association (NEMA) standards. Ensure material is Underwriters Laboratories (UL) listed. Provide and install electrical service conduits, conductors, disconnects, contactors, circuit breaker panels, and branch circuit breakers as shown on the Electrical Service Data chart in the plans. Faulty fabrication or poor workmanship in material, equipment, or installation is justification for rejection. Where manufacturers provide warranties and guarantees as a customary trade practice, furnish these to the State.

2. Provide electrical services in accordance with Electrical Details standard sheets, Departmental Material Specification (DMS) 11080 "Electrical Services," DMS 11081 "Electrical Services-Type A," DMS 11082 "Electrical Services-Type C," DMS 11083 "Electrical Services-Type D," DMS 11084 "Electrical Services-Type T," DMS 11085 "Electrical Services-Pedestal (PS)", and Item 628 "Electrical Services" of the Standard Specifications. Provide electrical service types A, C, and D, as listed on the Material Producers List (MPL) on the Department web site under "Roadway Illumination and Electrical Supplies," Item 628. Provide other service types as detailed on the plans.

3. Provide all work, materials, services, and any incidentals needed to install a complete electrical service as specified in the plans.

4. Coordinate with the Engineer and the utility provider for metering and compliance with utility requirements. Primary line extensions, connection charges, meter charges, and other charges by the utility company to provide power to the location are paid for in accordance with Item 628. Get approval for the costs associated with these charges prior to engaging the utility company to do the work. Consult with the utility provider to determine costs and requirements, and coordinate the work as approved.

5. The enclosure manufacturer will provide Master Lock Type 2 with brass tumblers keyed #2195 for all custom electrical enclosures. Installing Contractor is to provide Master Lock #2195 Type 2 with brass tumblers for "off the shelf" enclosures. Master Lock #2195 keys and locks become property of the State. Unless otherwise approved, do not energize electrical service equipment until locks are installed.

6. Enclosures with external disconnects that de-energize all equipment inside the enclosure do not need a dead front trim. Protect incoming line terminations from incidental contact as required by the NEC.

7. When galvanized is specified for nuts, screws, bolts or miscellaneous hardware, stainless steel may be used.

8. Provide wiring and electrical components rated for 75°C. Provide red, black, and white colored XHHW service entrance conductors of minimum size 6 American Wire Gauge (AWG). Identify size 6 AWG conductors by continuous color jacket. Identify electrical conductors sized 4 AWG and larger by continuous color jacket or by colored tape. Mark at least 6 inches of the conductor's insulation with half laps of colored tape, when identifying conductors. Ensure each service entrance conductor exits through a separately bushed non-metallic opening in the weatherhead. The lengths of the conductors outside the weatherhead are to be 12 inches minimum, 18 inches maximum, or as required by utility.

9. All electrical service conduit and conductors attached to the electrical service including the riser or the elbow below ground are subsidiary to the electrical service. For an underground utility feed, all service conduit and conductors after the elbow, including service conduit and conductors for the utility pole riser when furnished by the Contractor, will be paid for separately.

10. Provide rigid metal conduit (RMC) for all conduits on service, except for the ½ in. PVC conduit containing the electrical service grounding electrode conductor. Size the service entrance conduit as shown in the plans. Ensure conduit for branch circuit entry to enclosure is the same size as that shown on the layout sheets for branch circuit conduit. Extend all rigid metal conduits a minimum of 6 inches underground and then couple to the type and schedule of the conduit shown on the layout for that particular branch circuit. Install a grounding bushing on the RMC where it terminates in the service enclosure.

11. Use of liquidtight flexible metal conduit (LFMC) is allowed between the meter and service enclosure when they are mounted 90 to 180 degrees to each other. Size the LFMC the same size as service entrance conduit. LFMC must not exceed 3 feet in length. Strap LFMC within 1 foot of each end. LFMC less than 12 inches in length need not be strapped. Each end of LFMC must have a grounding bushing or be terminated with a grounding fitting. The LFMC must contain a grounded (neutral) conductor. Ensure any bend in LFMC never exceeds 180 degrees. A pull test is required on all installed conductors, with at least six inches of free conductor movement demonstrated to the satisfaction of the Engineer.

12. Ensure all mounting hardware and installation details of services conform to utility company specifications.

13. For all electrical service enclosures listed under Item 628 on the MPL, the UL 508 enclosure manufacturers will prepare and submit a schematic drawing unique to each service. Before shipment to the job site, place the applicable laminated schematic drawings and the laminated plan sheet showing the electrical service data chart used to build the enclosure in the enclosure's data pocket. The installing contractor will copy and laminate the actual project plan sheets detailing all equipment and branch circuits supplied by that service. The laminated plan sheets are to be placed in the service enclosure's document pocket. Reduce 11 in. x 17 in. plan sheets to 8 ½ in. x 11 in. before laminating. If the installation differs from the plan sheets, the installing contractor is to redline plan sheets before laminating.

14. When providing an "Off The Shelf" Type D or Type T service, provide laminated plan sheets detailing equipment and branch circuits supplied by that service. Reduce 11 in. x 17 in. plan sheets to 8 ½ in. x 11 in before laminating. Deliver these drawings before completion of the work to the Engineer, instead of placing in enclosure that has no door pocket.

15. Do not install conduit in the back wall of a service enclosure where it would penetrate the equipment mounting panel inside the enclosure. Provide grounding bushings on all metal conduits, and terminate bonding jumpers to grounding bus. Grounding bushings are not required when the end of the metal conduit is fitted with a conduit sealing hub or threaded boss, such as a meter base hub.

SERVICE ASSEMBLY ENCLOSURE

1. Provide threaded hub for all conduit entries into the top of enclosure.

2. Type galvanized steel (GS) enclosures may be used for Type C panelboards and for Type D and T services that do not use an enclosure mounted photocell or lighting contactor. Provide GS enclosures in accordance with DMS 11080, 11082, 11083, and 11084.

3. Provide aluminum (AL) and stainless steel (SS) enclosures for Types A, C, and D in accordance with DMS 11080, 11081, 11082, 11083, and 11084. Do not paint stainless steel.

4. Provide pedestal service (PS) enclosures in accordance with ED(9) and DMS 11080 and 11085. Do not provide GS pedestal services. If GS is shown in the PS descriptive code, provide an AL enclosure.

MAIN DISCONNECT & BRANCH CIRCUIT BREAKERS

1. Field drill flange-mounted remote operator handle if needed, to ensure handle is lockable in both the "On" and "Off" positions.

2. When the utility company provides a transformer larger than 50 KVA, verify that the available fault current is less than the circuit breaker's ampere interrupting capacity (AIC) rating and provide documentation from the electric utility provider to the Engineer.

PHOTOELECTRIC CONTROL

1. Provide photocell as listed on the MPL. Move, adjust, or shield the photocell from stray or ambient night time light to ensure proper operation. Mount photocell facing north when practical. Mount top of pole photocells as shown on Top Mounted Photocell Detail.

* ELECTRICAL SERVICE DATA

Elec. Service ID	Plan Sheet Number	Electrical Service Description	Service Conduit **Size	Service Conductors No./Size	Safety Switch Amps	Main Ckt. Bkr. Pole/Amps	Two-Pole Contractor Amps	Panelbd/ Loadcenter Amp Rating	Branch Circuit ID	Branch Ckt. Bkr. Pole/Amps	Branch Circuit Amps	KVA Load
SB 183	289	ELC SRV TY A 240/480 100(SS)AL(E)SF(U)	2"	3/#2	100	2P/100	100	N/A	Lighting NB	2P/40	26	28.1
									Lighting SB	2P/40	25	
									Underpass	1P/20	15	
NB Access	30	ELC SRV TY D 120/240 060(NS)SS(E)TS(O)	1 ¼"	3/#6	N/A	2P/60		100	Sig. Controller	1P/30	23	5.3
							30		Luminaires	2P/20	9	
									CCTV	1P/20	3	
2nd & Main	58	ELC SRV TY T 120/240 000(NS)GS(N)SP(O)	1 ¼"	3/#6	N/A	N/A	N/A	70	Flashing Beacon 1	1P/20	4	1.0
									Flashing Beacon 2	1P/20	4	

* Example only, not for construction. All new electrical services must have electrical service data chart specific to that service as shown in the plans.

** Verify service conduit size with utility. Size may change due to utility meter requirements. Ensure conduit size meets the National ELectrical Code.

EXPLANATION OF ELECTRICAL SERVICE DESCRIPTIVE CODE

ELEC SERV TY X XXX/XXX XXX (XX) XX (X) XX (X)

- Schematic Type
- Service Voltage V / V
- Disconnect Amp Rating
  000 indicates main lug only/
  Typically Type T
- (SS)= Safety Switch Ahead of Meter-Check with Utility
- (NS)= No safety Switch Ahead of Meter-Check with Utility
- Enclosure Type
  - GS= Galvanized steel("off the shelf")
  - SS= Stainless steel(Custom Enclosure)See MPL
  - AL= Aluminum (Custom Enclosure)See MPL
- Photocell Mounting Location
  - (E)= Inside Service/Enclosure Mounted
  - (T)= Top of pole
  - (L)= Luminaire mounted
  - (N)= None/No Photocell or Lighting Contactor Required
- Service Support Type
  - GC= Granite concrete
  - OC= Other concrete
  - TP= Timber pole
  - SP= Steel pole
  - SF= Steel frame
  - OT= Pole by others or paid for separately
  - EX= Existing pole
  - TS= Service on traffic signal pole
  - PS= Pedestal Service
- O= Overhead Service Feed from Utility
- U= Underground Service Feed from Utility

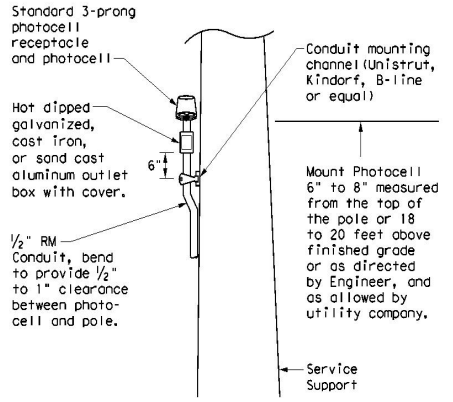

TOP MOUNTED PHOTOCELL

Install conduit strap maximum 3 feet from box. 5 foot maximum spacing between straps supporting conduit.

Texas Department of Transportation

Traffic Operations Division Standard

ELECTRICAL DETAILS SERVICE NOTES & DATA

ED(5)-14

July 11, 2023

FILE: ed5-14.dgn	DN: TxDOT	CK: TxDOT	DW: TxDOT	CK: TxDOT
©TxDOT October 2014	CONT	SECT	JOB	HIGHWAY
REVISIONS	DIST	COUNTY		SHEET NO.
				30

71E

DISCLAIMER:
The use of this standard is governed by the "Texas Engineering Practice Act". No warranty of any kind is made by TxDOT for any purpose whatsoever. TxDOT assumes no responsibility for the conversion of this standard to other formats or for incorrect results or damages resulting from its use.

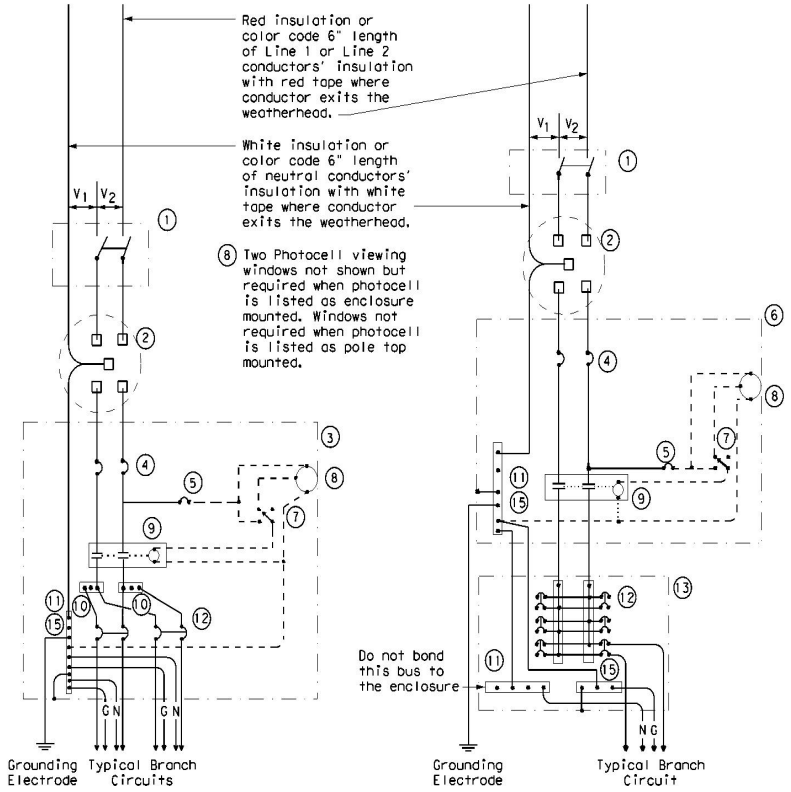

SCHEMATIC TYPE A
THREE WIRE

SCHEMATIC TYPE C
THREE WIRE

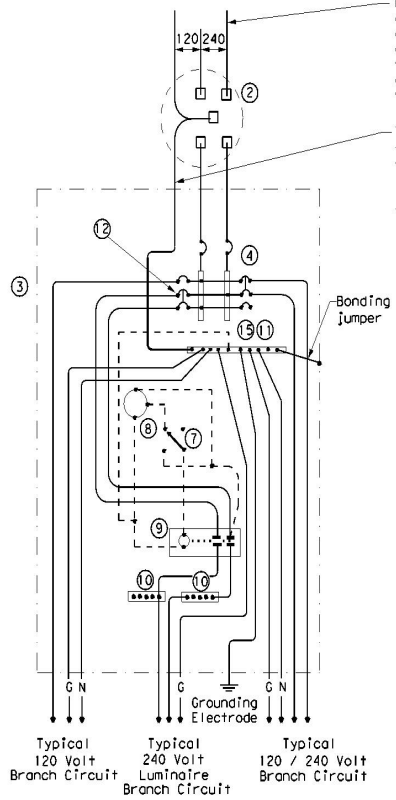

SCHEMATIC TYPE D - CUSTOM
120/240 VOLTS - THREE WIRE

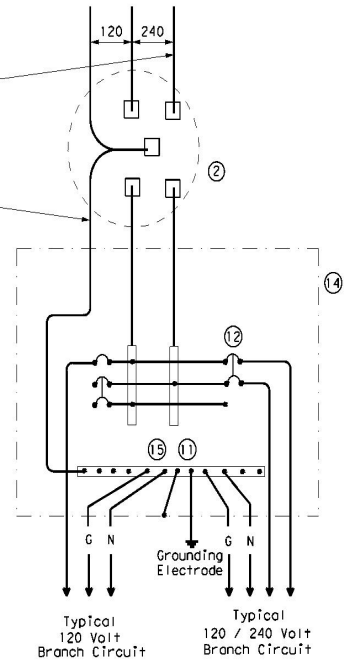

SCHEMATIC TYPE T
120/240 VOLTS - THREE WIRE

Galvanized steel-"Buy Off The Shelf" only. When required install photocell top of the pole or on luminaire only, no lighting contractor will be installed.

WIRING LEGEND	
———	Power Wiring
- - - - -	Control Wiring
—N—	Neutral Conductor
—G—	Equipment grounding conductor-always required

SCHEMATIC LEGEND	
1	Safety Switch (when required)
2	Meter (when required-verify with electric utility provider)
3	Service Assembly Enclosure
4	Main Disconnect Breaker (See Electrical Service Data)
5	Circuit Breaker, 15 Amp (Control Circuit)
6	Auxiliary Enclosure
7	Control Station ("H-O-A" Switch)
8	Photo Electric Control (enclosure-mounted shown)
9	Lighting Contactor
10	Power Distribution Terminal Blocks
11	Neutral Bus
12	Branch Circuit Breaker (See Electrical Service Data)
13	Separate Circuit Breaker Panelboard
14	Load Center
15	Ground Bus

Texas Department of Transportation

Traffic Operations Division Standard

ELECTRICAL DETAILS SERVICE ENCLOSURE AND NOTES

ED(6)-14

DATE: July 11, 2023
FILE: ed6-14.dgn

DN: TxDOT	CK: TxDOT	DW: TxDOT	CK: TxDOT
CONT	SECT	JOB	HIGHWAY
DIST	COUNTY		SHEET NO.

©TxDOT October 2014
REVISIONS

71F

TRAFFIC SIGNAL NOTES

1. Do not pass luminaire conductors through the signal controller cabinet.
2. Include an equipment grounding conductor in all conduits throughout the electrical system. Bond all exposed metal parts to the grounding conductor.
3. Provide roadway luminaires, when required, in accordance with the material and construction sections of Item 610, "Roadway Illumination Assemblies," except for performance testing of luminaires. Test installed roadway luminaires for proper operation as a part of the associated traffic signal system test.
4. If internally illuminated street name signs are approved for use, ground the fixture to the pole with a 12 AWG green XHHW conductor.
5. Bond anchor bolts to rebar cage in two locations using #3 bars or 6 AWG stranded copper conductors. Use listed mechanical connectors rated for embedment in concrete. See TXDOT standard TS-FD for further details.
6. Drill and tap signal poles for ½ in. X 13 UNC tank ground fitting. Provide and install tank ground fitting 4 in. to 6 in. directly below electrical service enclosure. Provide properly sized hole through the bottom of the enclosure for the service grounding electrode conductor. Connect the electrical service grounding electrode conductor to the tank ground fitting. Ensure electrical service grounding electrode conductor is as short and straight as possible from the enclosure to the tank ground fitting. See Inset A detail for further information. Size service entrance conduit and branch circuit conduit as shown in the plans.
7. Mount electrical service enclosure and meter to signal pole with stainless steel bands. Ensure bands are a minimum width of ¾ in. Secure enclosures to bands using two-bolt brackets. Install brackets near top and bottom of each enclosure. Install properly sized stainless steel washers on each bolt in the enclosure. Band or drill and tap properly sized stand-off straps to signal pole for attaching conduit.
8. Conduct pull tests and insulation resistance tests on all illumination and power conductors as required in Item 620 "Electrical Conductors" and ED(3). To prevent electronics damage, do not conduct insulation resistance tests on traffic signal cables after termination.
9. Lock all enclosures and bolt down all ground box covers before applying power to the signal installation.
10. Terminate conduits entering the top of enclosures with a conduit-sealing hub or threaded boss such as meter hub. Install a grounding bushing on all metal conduits not connected to conduit-sealing hub or threaded boss. Bond the grounding bushing to the ground bus with a bonding jumper. Seal all conduits entering enclosures with duct seal or expanding foam. Do not use silicone to seal conduit ends.
11. For all conduits, ensure the burial depth is a minimum of 18". Ensure the minimum burial depth for conduit placed under a roadway is 24".

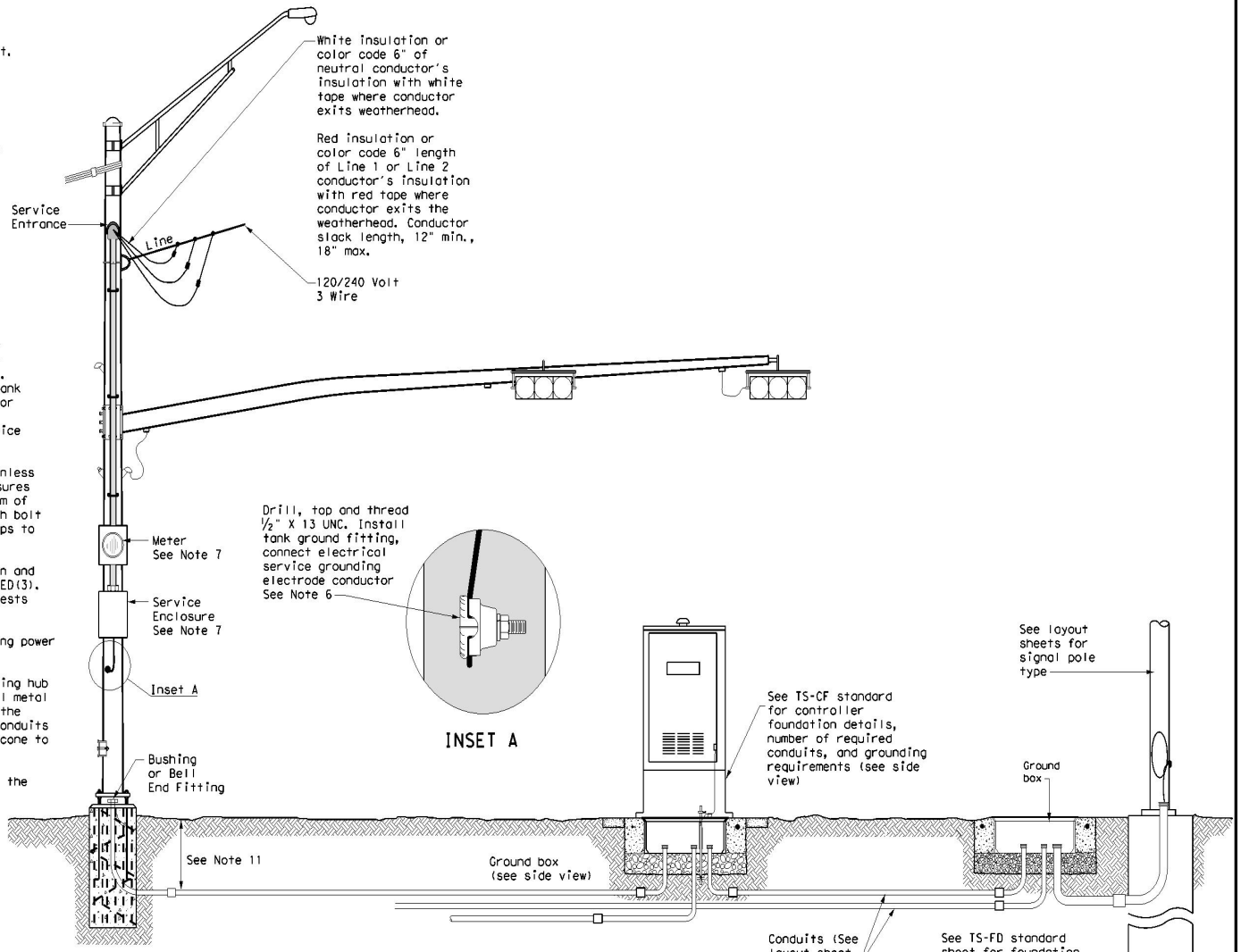

SIGNAL POLE WITH SERVICE

Type T electrical service mounted on signal pole shown as an example. See electrical details, layout sheets, and electrical service data chart for additional details.

SIGNAL CONTROLLER FRONT VIEW

SIGNAL POLE

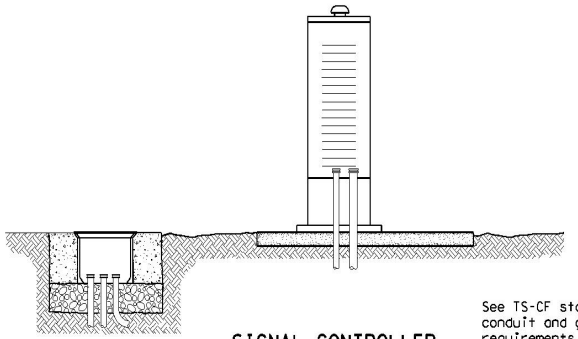

SIGNAL CONTROLLER SIDE VIEW

See TS-CF standard for conduit and grounding requirements. See layout sheets for ground box locations and any additional conduits that are required.

Texas Department of Transportation — Traffic Operations Division Standard

ELECTRICAL DETAILS TYPICAL TRAFFIC SIGNAL SYSTEM DETAILS

ED(8)-14

FILE: ed8-14.dgn	DN: TxDOT	CK: TxDOT	DW: TxDOT	CK: TxDOT			
©TxDOT October 2014	CONT	SECT	JOB	HIGHWAY			
REVISIONS							
	DIST	COUNTY		SHEET NO.			
				32			

71H

DISCLAIMER:
The use of this standard is governed by the "Texas Engineering Practice Act". No warranty of any kind is made by TxDOT for any purpose whatsoever. TxDOT assumes no responsibility for the conversion of this standard to other formats or for incorrect results or damages resulting from its use.

DATE:
FILE:

PEDESTAL SERVICE NOTES

1. Manufacture pedestal electrical services in accordance with Departmental Material Specifications (DMS)11080 "Electrical Services", 11085 "Electrical Services-Pedestal (PS)" and Item 628 "Electrical Services. "Provide pedestal electrical services as listed on the Material Producers list (MPL) on the Department's web site under "Roadway Illumination and Electrical Supplies," Item 628. Ensure all mounting hardware and installation details of services meet utility company specifications. Contact the local utility company for approval of pedestal details prior to installing the electrical pedestal service. Submit any changes required by the utility company prior to manufacturing the pedestal enclosure.

2. When a meter socket is required, provide a socket with a minimum 100 amp rating that complies with local utility requirements.

3. Provide Class A or C concrete for pedestal service foundations in accordance with Item 420, "Concrete Substructures," except that concrete will not be paid for directly but is considered subsidiary to Item 628.

4. Provide #4 reinforcing steel for foundations in accordance with Item 440, "Reinforcement for Concrete."

5. Install ½ in. X 2 11/16 in. minimum length concrete single expansion type anchors for mounting pedestal enclosure to foundation. Anchor location to match mounting holes in each corner of enclosure. Secure each of the four corners of the pedestal enclosure to the anchors in the foundation with a ½ in. galvanized or stainless steel machine thread bolt, a properly sized locknut and a flat washer.

6. Finish top of concrete foundation in a neat and workmanlike manner. If leveling washers are used, ensure no more than ⅛ in. gap at any corner. Do not exceed a maximum dip or rise in the foundation of ⅛ in. per foot. When properly installed, ensure the top of the service enclosure is level front to back and side to side within ¼ in. Repair rocking or movement of the service enclosure at no additional cost to the department.

7. Do not use liquidtight flexible metal conduit (LFMC) on pedestal type services.

8. Ensure all elbows in the foundation are sized as per utility provider's conduit requirements for underground conduit and feeders. PVC extensions may be installed provided the ends of the rigid metal conduits are more than 2 in. below the top of the concrete foundation. Where extension conduits are metal, grounding bushings must be installed with a bonding jumper properly terminated.

DISCLAIMER:
The use of this standard is governed by the "Texas Engineering Practice Act". No warranty of any kind is made by TxDOT for any purpose whatsoever. TxDOT assumes no responsibility for the conversion of this standard to other formats or for incorrect results or damages resulting from its use.

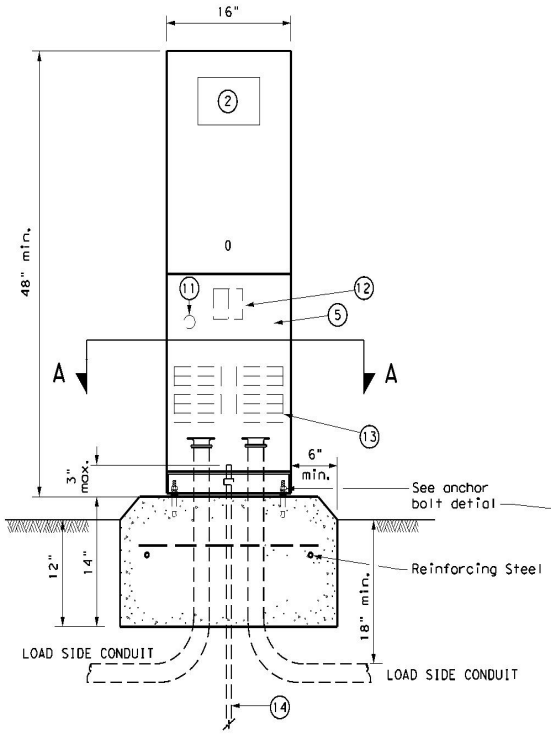

FRONT VIEW

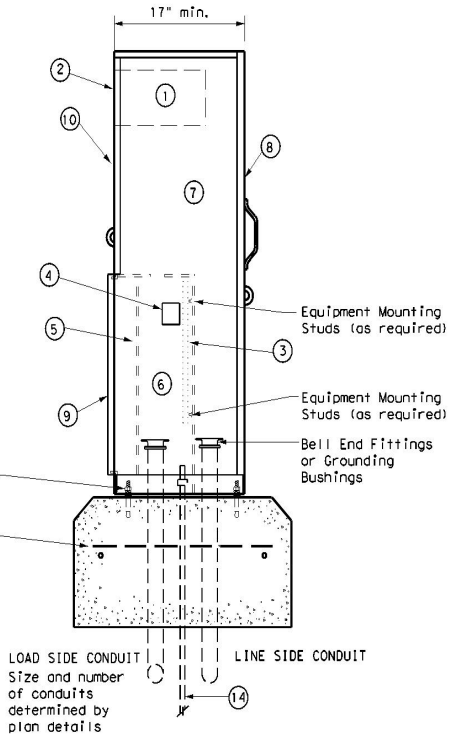

SIDE VIEW

TYPE C shown, TYPE A similar except that TYPE A shall have individual circuit breakers (CB) mounted on an equipment mounting panel. CB Handles shall protrude through hinged deadfront trim.

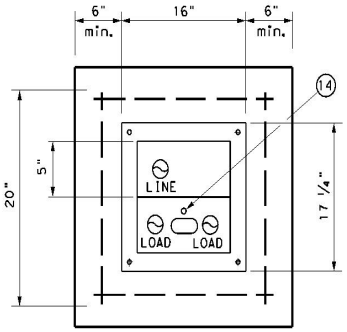

SECTION A-A

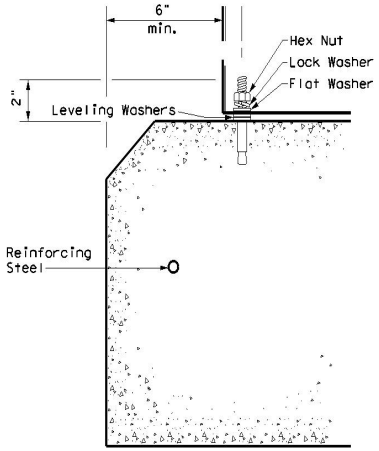

ANCHOR BOLT DETAIL

LEGEND	
1	Meter Socket, (when required)
2	Meter Socket Window, (when required)
3	Equipment Mounting Panel
4	Photo Electric Control Window, (When required)
5	Hinged Deadfront Trim
6	Load Side Conduit Trim
7	Line Side Conduit Area
8	Utility Access Door, with handle
9	Pedestal Door
10	Hinged Meter Access
11	Control Station (H-O-A Switch)
12	Main Disconnect
13	Branch Circuit Breakers
14	Copper Clad Ground Rod - 5/8" X 10'

Texas Department of Transportation

Traffic Operations Division Standard

ELECTRICAL DETAILS
ELECTRICAL SERVICE SUPPORT
PEDESTAL SERVICE TYPE PS

ED(9)-14

July 11, 2023

DN: TxDOT	CK: TxDOT	DW: TxDOT	CK: TxDOT
©TxDOT October 2014	CONT	SECT	JOB	HIGHWAY
REVISIONS				
	DIST	COUNTY		SHEET NO.
				33

DATE:
FILE:

71J

DUCT CABLE & HDPE CONDUIT NOTES

1. Provide duct cable in accordance with Departmental Material Specification (DMS) 11060 "Duct Cable" and Item 622 "Duct Cable." Provide duct cable as listed on the Material Producer List (MPL) on the Department web site under "Roadway Illumination and Electrical Supplies" Item 622.

2. Provide High-Density Polyethylene (HDPE) conduit in accordance with DMS 11060 and Item 618, "Conduit." Provide HDPE as listed on the MPL on the Department web site under "Roadway Illumination and Electrical Supplies," Item 618.

3. Supply duct cable with a minimum 2 in. diameter, unless otherwise shown in the plans. Provide duct cable and HDPE conduit as shown by descriptive code or on the plans. Bend duct cable and HDPE conduit as recommended by the manufacturer, with a minimum bending radius of 26 in. for 2 in. duct. Follow manufacturers' recommendations when handling duct cable and HDPE conduit reels and during installation of duct cable and HDPE conduit.

4. Do not splice conductors within duct cable or HDPE conduit. Couple duct cable and HDPE entering a ground box or foundation to a PVC elbow. When galvanized steel RMC elbows are called for in the plans and any portion of the RMC elbow is buried less than 18" from possible contact, ground the RMC elbow.

5. Furnish and install duct cable with factory installed conductors, sized as shown in the plans and as required by the National Electrical Code (NEC). The NEC contains specific requirements for duct cable in Article, "Nonmetallic Underground Conduit with Conductors: Type NUCC."

6. When conduit casing is called for in the plans, extend duct cable or HDPE conduit through the conduit casing in one continuous length without connection to the casing.

7. Seal the ends of duct cable or HDPE conduit with duct seal, expandable foam, or other approved method after completing the pull tests required by Item 622.

8. Provide minimum cover of 24 in. under roadways, 18 in. in other locations, or as shown on the plans.

9. Furnish and install listed fittings to couple duct cable or HDPE conduit to other types of conduit. Duct cable and HDPE conduit may be field-threaded and spliced with PVC or RMC threaded couplings; connected with listed tie-wrap fittings; connected using listed coupling made of HDPE with stainless steel external banding clamps and locking rings; connected with approved electrofusion conduit couplings; or connected using an approved chemical fusion method using an epoxy or adhesive specifically designed for HDPE couplings and connectors all installed in accordance with their manufacturer's instructions. Do not use PVC glue on HDPE. Do not use water pipe fittings, or connect conduit with heat shrink tubing.

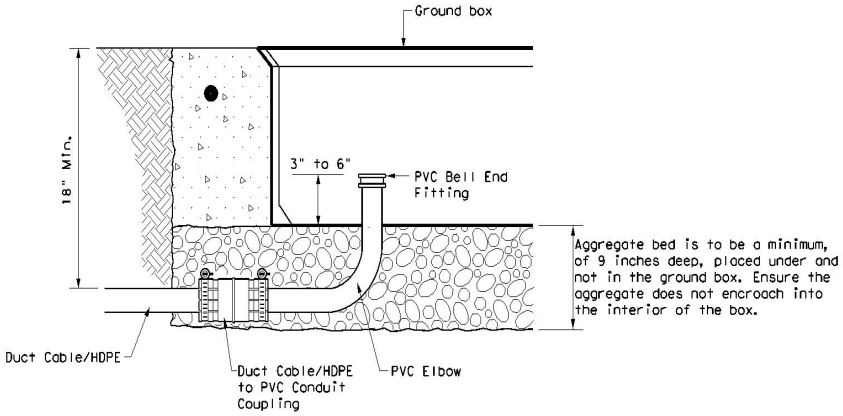

DUCT CABLE/HDPE AT GROUND BOX

When the upper end of an RMC Ell does not enter the ground box, it may be extended with a SCH-40 PVC conduit nipple and bell end, provided there is a minimum of 18" of cover over all parts of the elbow. If not, a rigid extension and ground bushing is required.

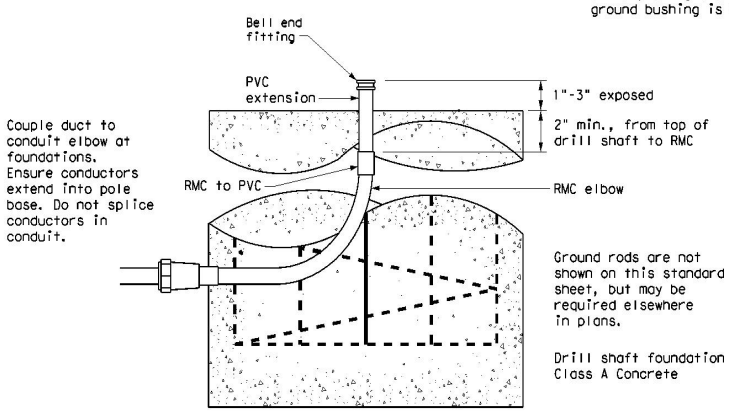

DUCT CABLE / HDPE AT FOUNDATION

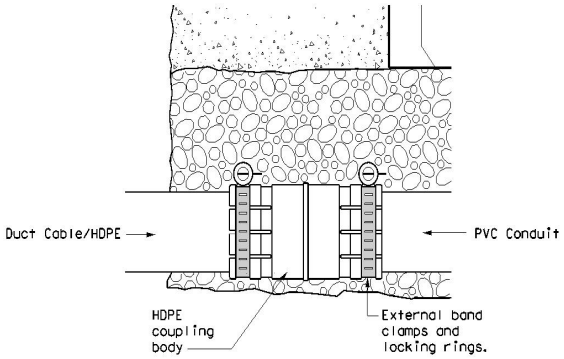

DUCT CABLE/HDPE TO PVC

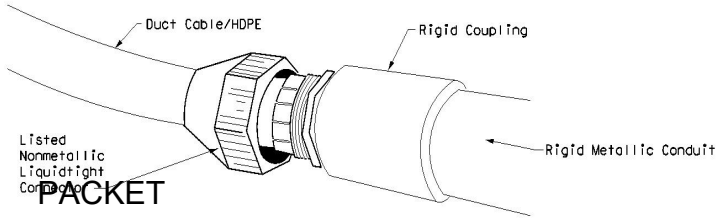

DUCT CABLE/HDPE TO RMC

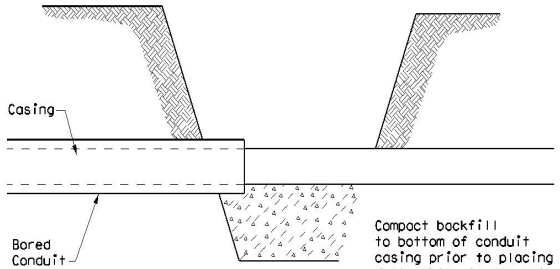

BORE PIT DETAIL

Texas Department of Transportation

Traffic Operations Division Standard

ELECTRICAL DETAILS DUCT CABLE/ HDPE CONDUIT

ED(11)-14

ED(11)-14.dgn	DN: TxDOT	CK: TxDOT	DW: TxDOT	CK: TxDOT
©TxDOT October 2014	CONT	SECT	JOB	HIGHWAY
REVISIONS				
	DIST	COUNTY		SHEET NO.
				34

71L

DISCLAIMER:
The use of this standard is governed by the "Texas Engineering Practice Act". No warranty of any kind is made by TxDOT for any purpose whatsoever. TxDOT assumes no responsibility for the conversion of this standard to other formats or for incorrect results or damages resulting from its use.

DATE:
FILE:

BATTERY BOX GROUND BOXES NOTES

A. MATERIALS

1. Provide polymer concrete or fiberglass reinforced plastic (FRP) battery box ground box and cover in accordance with Departmental Material Specification (DMS) 11071 "Battery Box Ground Boxes." Battery box will accommodate up to 4 batteries, each measuring 8 in. x 13.5 in. x 10 in. (W x L x D). Label battery box ground box cover in accordance with DMS 11071.

2. Supply a marine grade batteries with covers. Secure the marine grade batteries with covers to the stainless steel rack in the bottom of the ground box with tie down straps.

B. CONSTRUCTION METHODS

1. Ensure conduit entry will not interfere with placement of the batteries in the battery box ground box.

2. Remove all gravel and dirt from conduit. Cap all conduits prior to placing aggregate and setting battery box ground box. Provide Grade 3 or 4 coarse aggregate as shown on Table 2 of Item 302 "Aggregates for Surface Treatments." Ensure the aggregate bed is in place and is a minimum of 9 in. deep prior to setting the box. Install battery box ground box on top of aggregate.

3. Cast battery box aprons in place. Reinforcing steel may be field bent. Ensure the depth of concrete for the apron extends from finished grade to the top of the aggregate bed under the box. Battery box ground box aprons, including concrete and reinforcing steel, are subsidiary to battery box ground boxes when called for by descriptive code.

4. Bolt covers down when not working in battery box ground boxes. Keep bolt holes in the box clear of dirt.

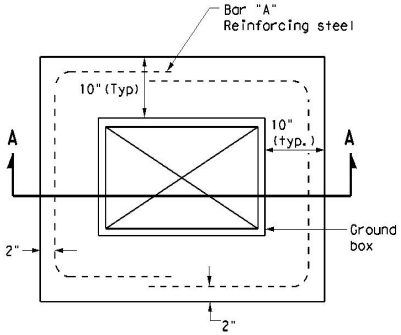

PLAN VIEW

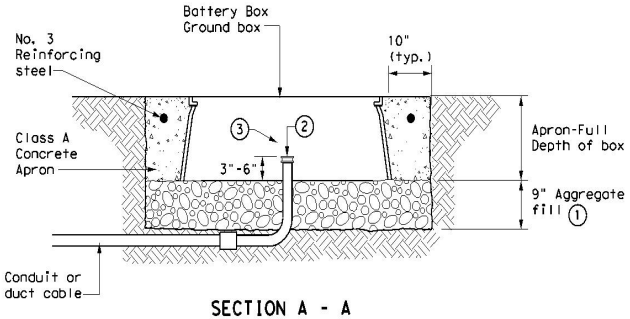

SECTION A - A

APRON FOR BATTERY BOX GROUND BOXES

(1) Place aggregate under the box and not in the box. Aggregate should not encroach on the interior volume of the box.

(2) Install bushing or bell end fitting on the upper end of conduit.

(3) Install all conduits in a neat and workmanlike manner.

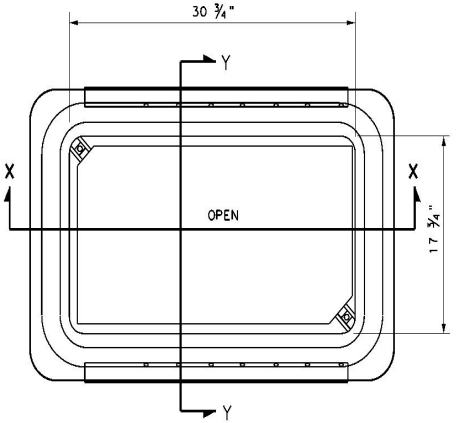

BATTERY BOX TOP VIEW

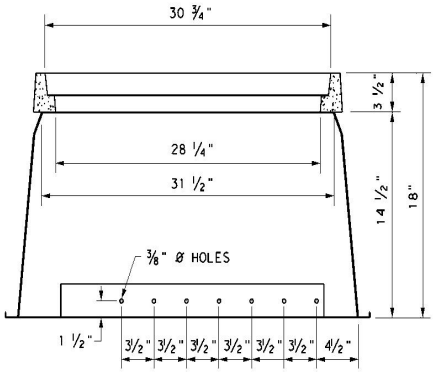

SECTION X-X

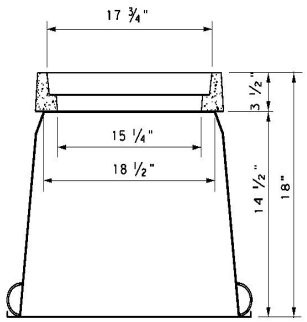

SECTION Y-Y

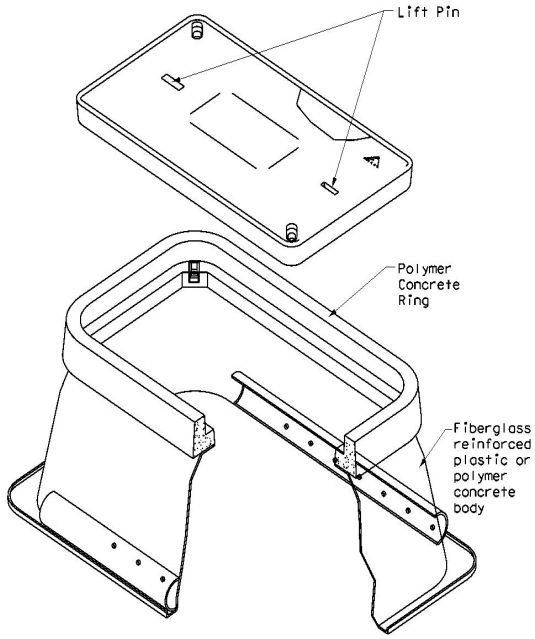

DISCLAIMER:
The use of this standard is governed by the "Texas Engineering Practice Act". No warranty of any kind is made by TxDOT for any purpose whatsoever. TxDOT assumes no responsibility for the conversion of this standard to other formats or for incorrect results or damages resulting from its use.

DATE:
FILE:

Texas Department of Transportation

Traffic Operations Division Standard

ELECTRICAL DETAILS
BATTERY BOX
GROUND BOXES

ED(12)-14

©TxDOT October 2014	CONT	SECT	JOB	HIGHWAY
REVISIONS				
	DIST	COUNTY		SHEET NO.
				35

DN: TxDOT CK: TxDOT DW: TxDOT CK: TxDOT

71M

PACKET

July 11, 2023

DISCLAIMER:
The use of this standard is governed by the "Texas Engineering Practice Act". No warranty of any kind is made by TxDOT for any purpose whatsoever. TxDOT assumes no responsibility for the conversion of this standard to other formats or for incorrect results or damages resulting from its use.

DATE:
FILE:

APPLICABLE STANDARDS SHEETS

OVERHEAD SIGN BRIDGE STANDARDS:

OSB-SE
OSB-Z#
OSB-Z#1
HOSB-Z#
HOSB-Z1L
HOSB-Z#1
OSBT
OSBC
OSBC-SC-Z#
OSBS-SC
OSB-FD
OSB-FD-SC

CANTILEVER OVERHEAD SIGN SUPPORT STANDARDS:

COSS-SE
COSS-Z#-10
HCOSS-Z#-10
COSS-Z21-10
COSS-Z#&Z#1-10
COSSD
COSSF
COSS-FD

Note: # = Wind Zone number 1, 2, 3 or 4

HIGH MAST ILLUMINATION POLE STANDARDS:

HMIP-98
HMIF-98

WALKWAYS AND BRACKETS STANDARDS:

SWW
SB(SWL-1)

TRAFFIC SIGNAL POLE STANDARDS:

SP-80
SP-100
SMA-80
SMA-100
DMA-80
DMA-100
MA-C
MAC(ILSN)
MAD-D
TS-FD
LUM-A
CFA
LMA
TS-C
MA-DPD

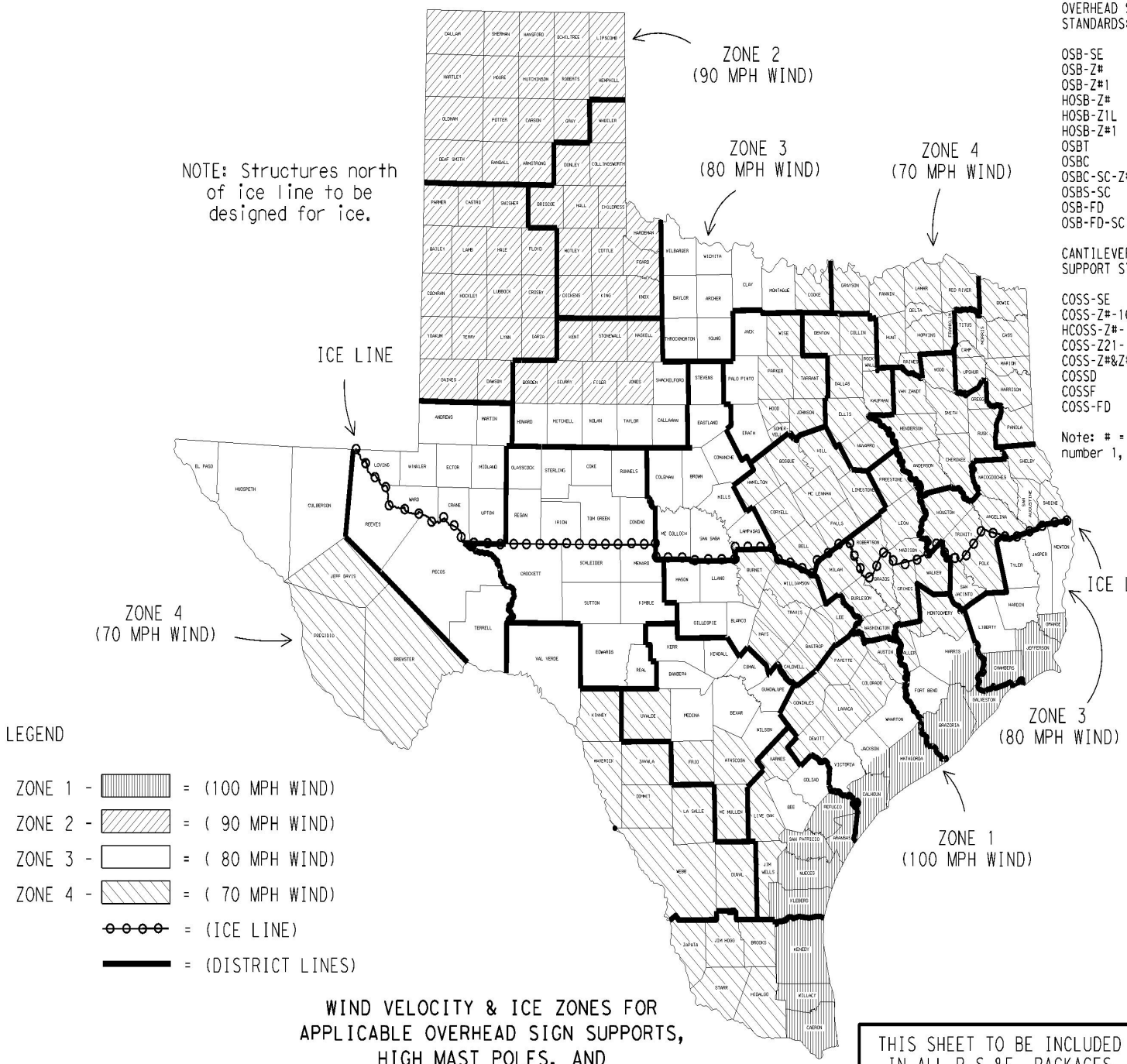

LEGEND

ZONE 1 - = (100 MPH WIND)
ZONE 2 - = (90 MPH WIND)
ZONE 3 - = (80 MPH WIND)
ZONE 4 - = (70 MPH WIND)
= (ICE LINE)
= (DISTRICT LINES)

FOR HARRIS CO. ONLY
Zone line is just North of US 90, around on the North, West and South sides of IH 610 and down the West side of SH 288.

FOR JACKSON CO. ONLY
Zone line is just North of SH 616.

WIND VELOCITY & ICE ZONES FOR APPLICABLE OVERHEAD SIGN SUPPORTS, HIGH MAST POLES, AND TRAFFIC SIGNAL POLES 5.76

Based on 50 Year Mean Recurrence Interval of Fastest Mile Wind Velocity at 33 feet height.

THIS SHEET TO BE INCLUDED IN ALL P.S.&E. PACKAGES CONTAINING ONE OR MORE OF THE APPLICABLE STANDARD SHEETS LISTED HEREON

PACKET

Texas Department of Transportation | Traffic Operations Division Standard

WIND VELOCITY AND ICE ZONES

WV & IZ-14

July 11, 2023

FILE:	wiadesign	DN: TxDOT	CK: TxDOT	DW: TxDOT	CK: TxDOT
©TxDOT April 1996		CONT	SECT	JOB	HIGHWAY
REVISIONS					
8-14 Added list of applicable standards, restricting use to structures designed for Fastest Mile wind speeds.		DIST	COUNTY		SHEET NO.
					36

30

DISCLAIMER:
The use of this standard is governed by the "Texas Engineering Practice Act". No warranty of any kind is made by TxDOT for any purpose whatsoever. TxDOT assumes no responsibility for the conversion of this standard to other formats or for incorrect results or damages resulting from its use.

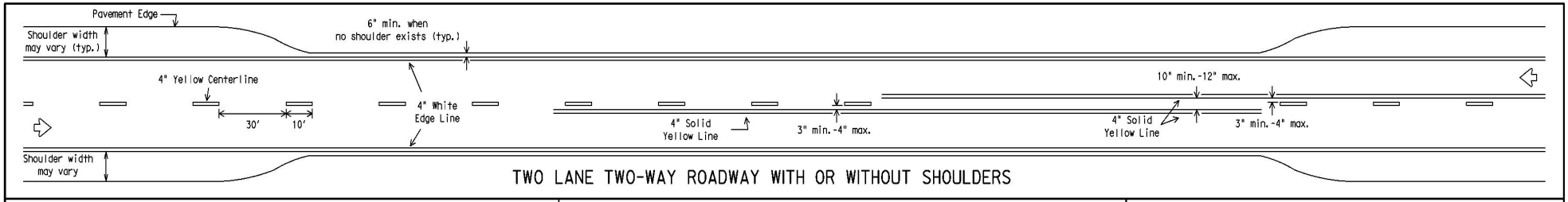

TWO LANE TWO-WAY ROADWAY WITH OR WITHOUT SHOULDERS

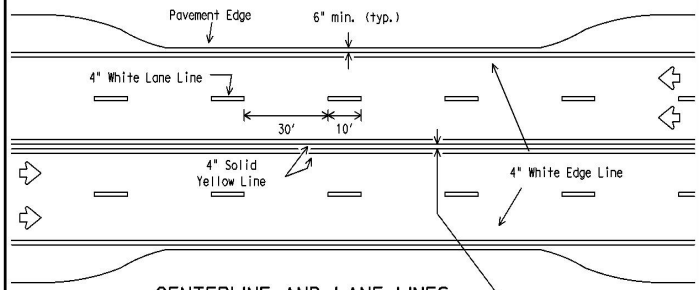

CENTERLINE AND LANE LINES FOUR LANE TWO-WAY ROADWAY WITH OR WITHOUT SHOULDERS

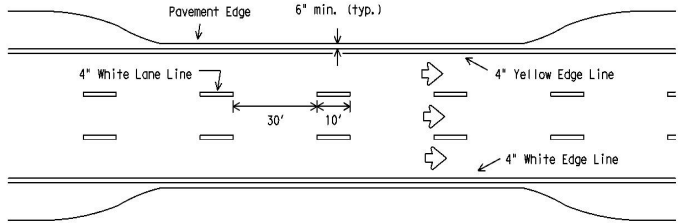

EDGE LINE AND LANE LINES ONE-WAY ROADWAY WITH OR WITHOUT SHOULDERS

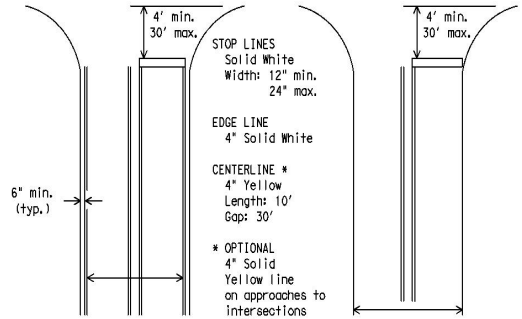

GUIDE FOR PLACEMENT OF STOP LINES, EDGE LINE & CENTERLINE

Based on Traveled Way and Pavement Widths for Undivided Highways

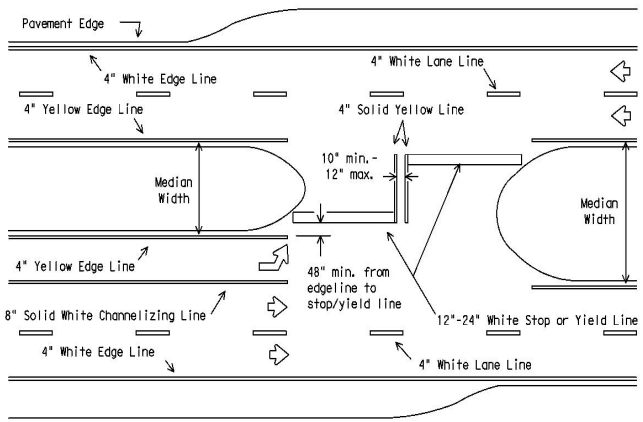

All medians shall be field measured to determine the location of necessary striping. Stop/Yield bars and centerlines shall be placed when the median width is greater than 30 ft. The median width is defined as the area between two roadways of a divided highway measured from edge of traveled way to edge of traveled way. The median excludes turn lanes. The median width might be different between intersections, interchanges and of opposite approaches of the same intersection. The narrow median width will be the controlling width to determine if markings are required.

FOUR LANE DIVIDED ROADWAY INTERSECTIONS

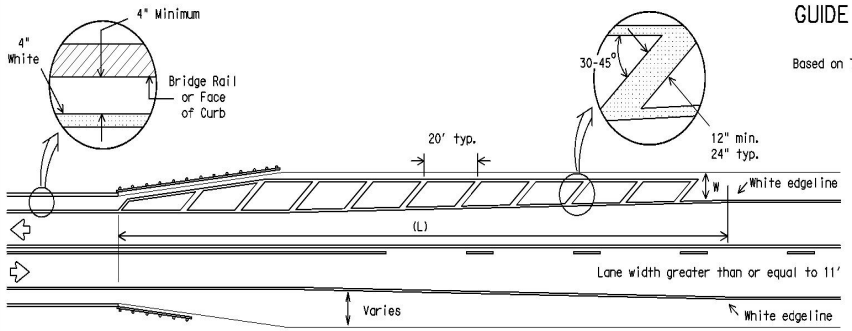

NOTES:

1. No-passing zone on bridge approach is optional but if used, it shall be a minimum 500 feet long.
2. For crosshatching length (L) see Table 1.
3. The width of the offset (W) and the required crosshatching width is the full shoulder width in advance of the bridge.
4. The crosshatching is not required if delineators or barrier reflectors are used along the structure.
5. For guard fence details, refer elsewhere in the plans.

ROADWAYS WITH REDUCED SHOULDER WIDTHS ACROSS BRIDGE OR CULVERT

TABLE 1 - TYPICAL LENGTH (L)

Posted Speed *	Formula
≤ 40	$L = \frac{WS^2}{60}$
≥ 45	L=WS

* 85th Percentile Speed may be used on roads where traffic speeds normally exceed the posted speed limit. Crosshatching length should be rounded up to nearest 5 foot increment.

L=Length of Crosshatching (FT.) W=Width of Offset (FT.)
S=Posted Speed (MPH)

EXAMPLES:

An 8 foot shoulder in advance of a bridge reduces to 4 feet on a 70 MPH roadway. The length of the cross-hatching should be:

$L = 8 \times 70 = 560$ ft.

A 4 foot shoulder in advance of a bridge reduces to 2 feet on a 40 MPH roadway. The length of the cross-hatching should be:

$L = 4(40)^2 / 60 = 106.67$ ft. rounded to 110 ft.

GENERAL NOTES

1. Edgeline striping shall be as shown in the plans or as directed by the Engineer. The edgeline should typically be placed a minimum of 6 inches from the edge of pavement. This distance may vary due to pavement raveling or other conditions. Edgelines are not required in curb and gutter sections of roadways.
2. The traveled way includes only that portion of the roadway used for vehicular travel and not the parking lanes, sidewalks, berms and shoulders. The traveled ways shall be measured from the inside of edgeline to inside of edgeline of a two lane roadway.

MATERIAL SPECIFICATIONS	
PAVEMENT MARKERS (REFLECTORIZED)	DMS-4200
EPOXY AND ADHESIVES	DMS-6100
BITUMINOUS ADHESIVE FOR PAVEMENT MARKERS	DMS-6130
TRAFFIC PAINT	DMS-8200
HOT APPLIED THERMOPLASTIC	DMS-8220
PERMANENT PREFABRICATED PAVEMENT MARKINGS	DMS-8240

All pavement marking materials shall meet the required Departmental Material Specifications as specified by the plans.

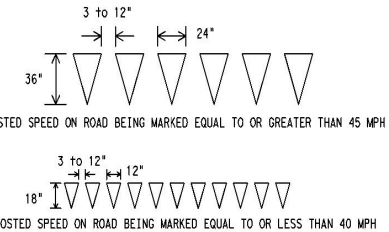

YIELD LINES

Texas Department of Transportation
Traffic Operations Division

TYPICAL STANDARD PAVEMENT MARKINGS

PM(1)-12

© TXDOT November 1978

DN: TXDOT	CK: TXDOT	DW: TXDOT	CK: TXDOT

REVISIONS	CONT	SECT	JOB	HIGHWAY
8-95 2-12				
5-00				
8-00				
3-03				

DIST	COUNTY	SHEET NO.
		37

22A

DATE:
FILE:

DISCLAIMER:
The use of this standard is governed by the "Texas Engineering Practice Act". No warranty of any kind is made by TxDOT for any purpose whatsoever. TxDOT assumes no responsibility for the conversion of this standard to other formats or for incorrect results or damages resulting from its use.

REFLECTIVE RAISED PAVEMENT MARKERS FOR VEHICLE POSITIONING GUIDANCE

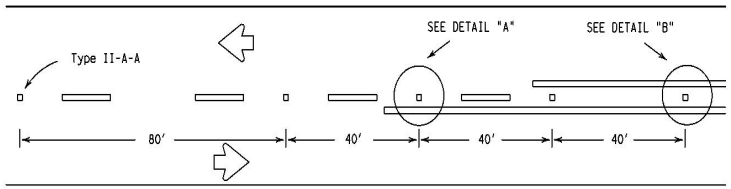

CENTERLINE FOR ALL TWO LANE ROADWAYS

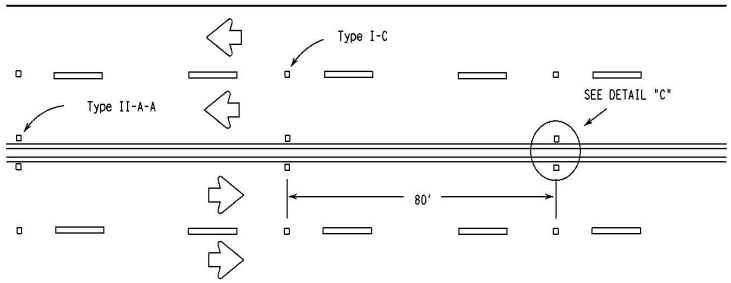

CENTERLINE & LANE LINES
FOR FOUR LANE TWO-WAY HIGHWAYS

Raised pavement marker Type I-C, clear face toward normal traffic, shall be placed on 80-foot centers.

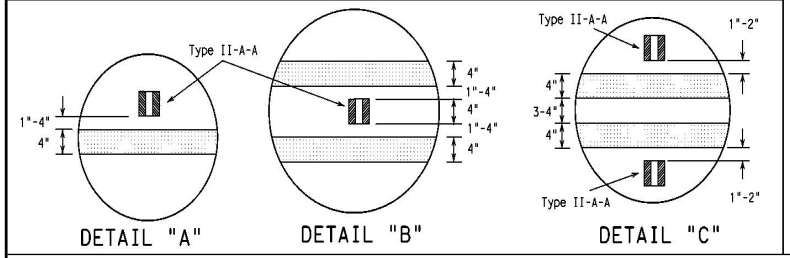

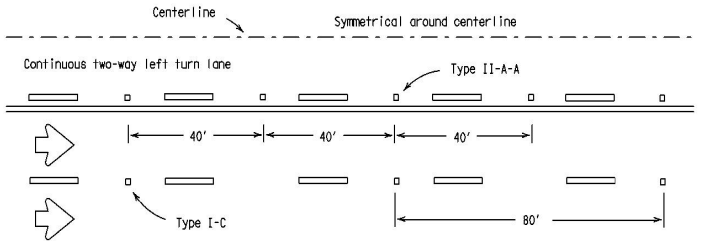

CENTERLINE AND LANE LINES FOR TWO-WAY LEFT TURN LANE

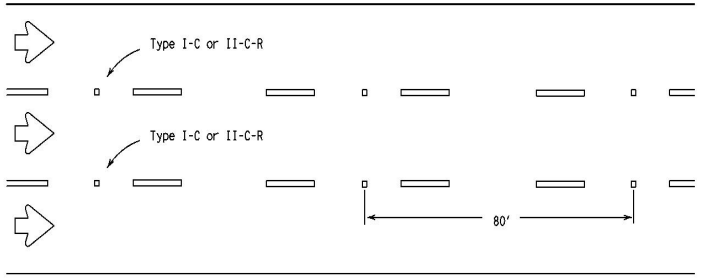

LANE LINES FOR ONE-WAY ROADWAY (NON-FREEWAY FACILITIES)

Raised pavement markers Type II-C-R shall have clear face toward normal traffic and red face toward wrong-way traffic.

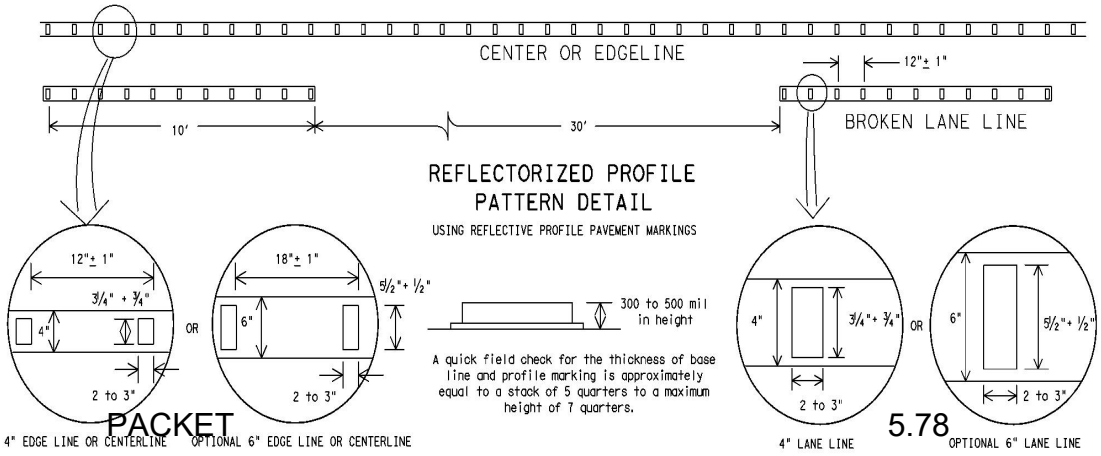

NOTE:
Profile markings shall not be placed on roadways with a posted speed limit of 45 MPH or less.

GENERAL NOTES

1. All raised pavement markers placed in broken lines shall be placed in line with and midway between the stripes.
2. On concrete pavements the raised pavement markers should be placed to one side of the longitudinal joints.

MATERIAL SPECIFICATIONS	
PAVEMENT MARKERS (REFLECTORIZED)	DMS-4200
EPOXY AND ADHESIVES	DMS-6100
BITUMINOUS ADHESIVE FOR PAVEMENT MARKERS	DMS-6130
TRAFFIC PAINT	DMS-8200
HOT APPLIED THERMOPLASTIC	DMS-8220
PERMANENT PREFABRICATED PAVEMENT MARKINGS	DMS-8240

All pavement marking materials shall meet the required Departmental Material Specifications as specified by the plans.

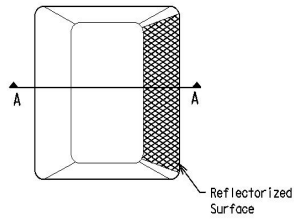

Type I (Top View)

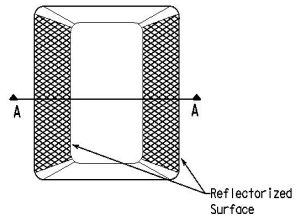

Type II (Top View)

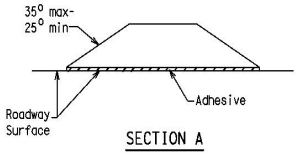

SECTION A

RAISED PAVEMENT MARKERS

Texas Department of Transportation
Traffic Operations Division

POSITION GUIDANCE USING RAISED MARKERS
REFLECTORIZED PROFILE MARKINGS

PM(2)-12

© TxDOT April 1911

DN: TXDOT	CK: TXDOT	DW: TXDOT	CK: TXDOT

REVISIONS	CONT	SECT	JOB	HIGHWAY
4-92 2-10				
5-00 2-12				
8-00				
2-08				

DIST	COUNTY	SHEET NO.
		38

22B

DATE:
FILE:

PACKET 5.78 July 11, 2023

DISCLAIMER: The use of this standard is governed by the "Texas Engineering Practice Act". No warranty of any kind is made by TxDOT for any purpose whatsoever. TxDOT assumes no responsibility for the conversion of this standard to other formats or for incorrect results or damages resulting from its use.

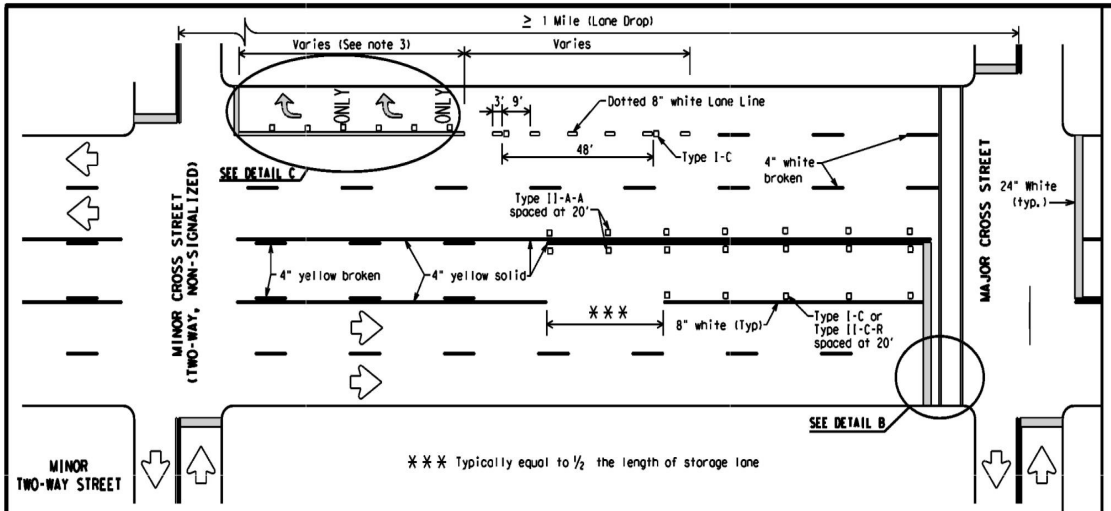

TYPICAL TWLTL AT TWO-WAY CROSS STREET AND RIGHT TURN LANE DROP

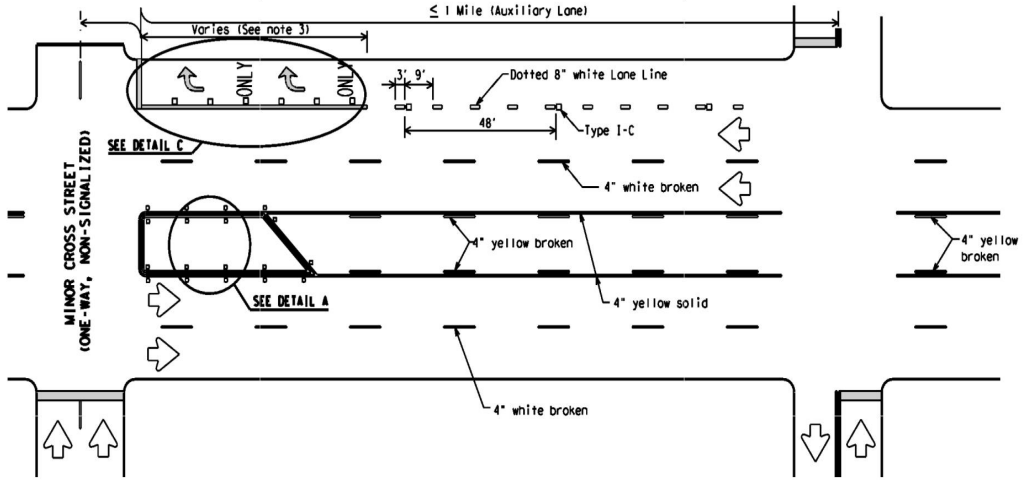

TYPICAL TWLTL AT ONE-WAY STREET AND RIGHT TURN AUXILIARY LANE

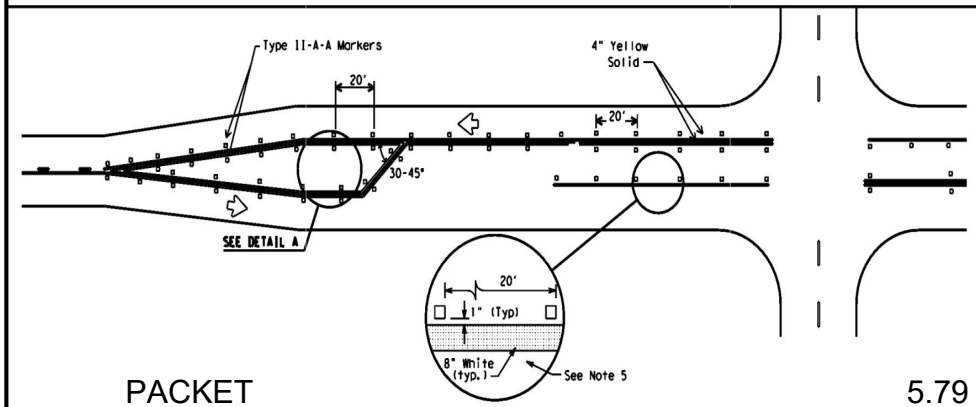

TYPICAL TWO-LANE HIGHWAY INTERSECTION WITH LEFT TURN BAYS

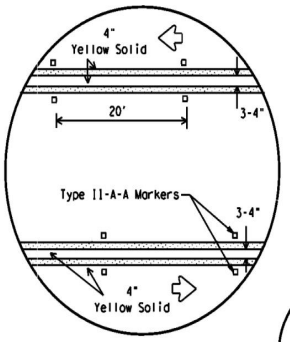

DETAIL A

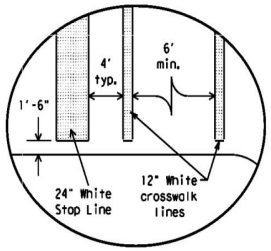

Final placement of Stop Bar and Crosswalk shall be approved by the Engineer in the field.

DETAIL B

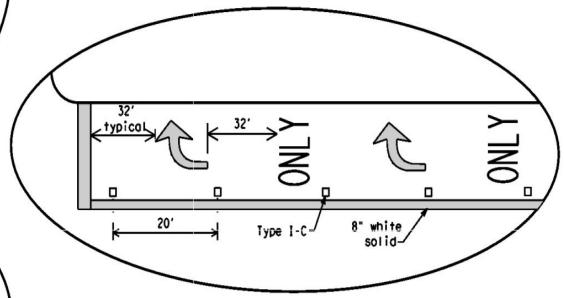

DETAIL C

MATERIAL SPECIFICATIONS	
PAVEMENT MARKERS (REFLECTORIZED)	DMS-4200
EPOXY AND ADHESIVES	DMS-6100
BITUMINOUS ADHESIVE FOR PAVEMENT MARKERS	DMS-6130
TRAFFIC PAINT	DMS-8200
HOT APPLIED THERMOPLASTIC	DMS-8220
PERMANENT PREFABRICATED PAVEMENT MARKINGS	DMS-8240

All pavement marking materials shall meet the required Departmental Material Specifications as specified by the plans.

GENERAL NOTES

1. Refer elsewhere in plans for additional RPM placement and details.
2. Lane use word and arrow markings shall be used where through lanes approaching an intersection become mandatory turn lanes. Lane use word and arrow markings should be used in auxiliary lanes of substantial length. Lane use arrow markings or word and arrow markings may be used in other lanes and turn bays for emphasis. Details for words and arrows as shown in the Standard Highway Sign Designs for Texas.
3. When lane used word and arrow markings are used, two sets of arrows should be used if the length of the bay is greater than 180 feet. When a single lane use arrow or word and arrow marking is used for a short turn lane, it should be located at or near the upstream end of the full-width turn lane.
4. Other crosswalk patterns as shown in the "Texas Manual on Uniform Traffic Control Devices" may be used.
5. Raised pavement marker Type I-C with undivided highways, flush medians and two way left turn lanes. Raised pavement marker Type II-C-R with divided highways and raised medians.
6. A two-way left-turn (TWLT) lane-use arrow pavement marking should be used at or just downstream from the beginning of a two-way left-turn lane within a corridor. Repeating the marking after each intersection or dedicated turn bay is not required unless stated elsewhere in the plans.

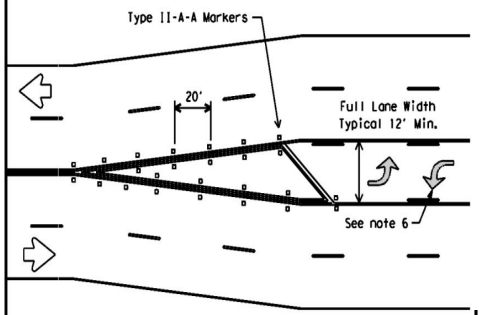

TYPICAL TRANSITION FOR TWLTL AND DIVIDED HIGHWAY

Texas Department of Transportation
Traffic Operations Division

PAVEMENT MARKINGS FOR TWO-WAY LEFT TURN LANES DIVIDED HIGHWAYS AND RURAL LEFT TURN BAYS

PM(3)-12

©TxDOT April 1998

DN: TxDOT	CK: TxDOT	DW: TxDOT	CK: TxDOT
REVISIONS	CONT	SECT	JOB	HIGHWAY
5-00 2-12				
8-00				
3-03	DIST	COUNTY		SHEET NO.
2-10				

22C

DATE:
FILE:

DISCLAIMER:
The use of this standard is governed by the "Texas Engineering Practice Act". No warranty of any kind is made by TxDOT for any purpose whatsoever. TxDOT assumes no responsibility for the conversion of this standard to other formats or for incorrect results or damages resulting from its use.

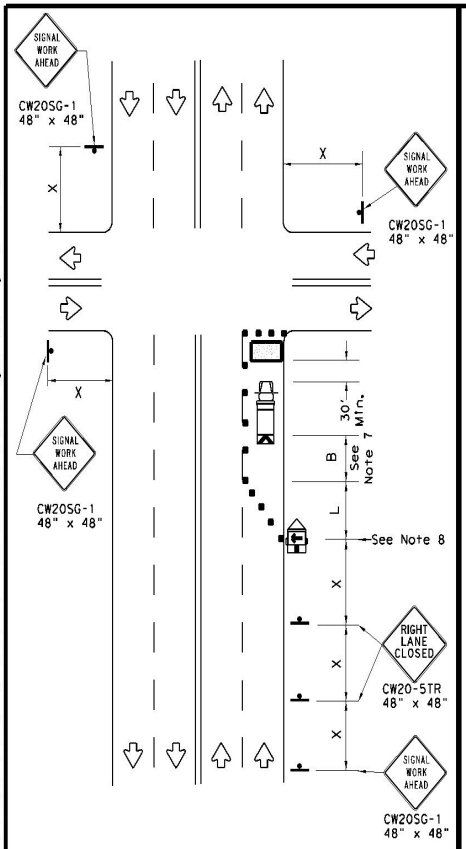

NEAR SIDE LANE CLOSURE

SHORT DURATION OR SHORT TERM STATIONARY

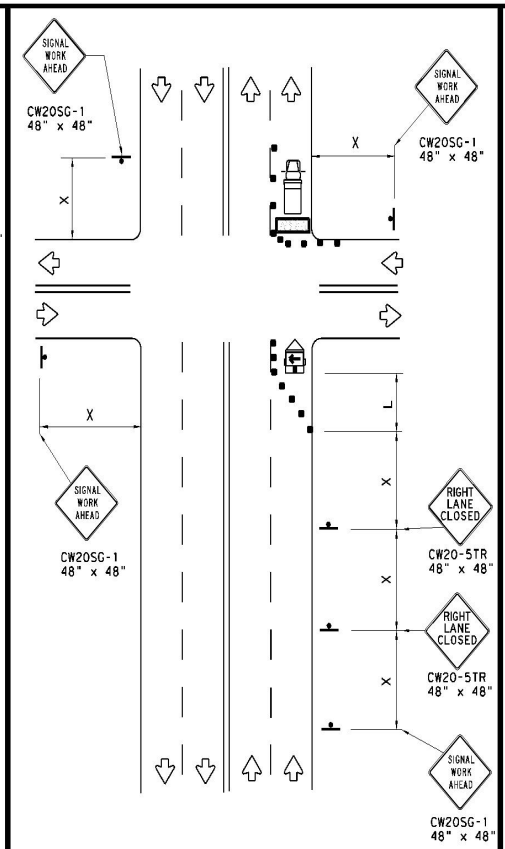

FAR SIDE RIGHT LANE CLOSURE

SHORT DURATION OR SHORT TERM STATIONARY

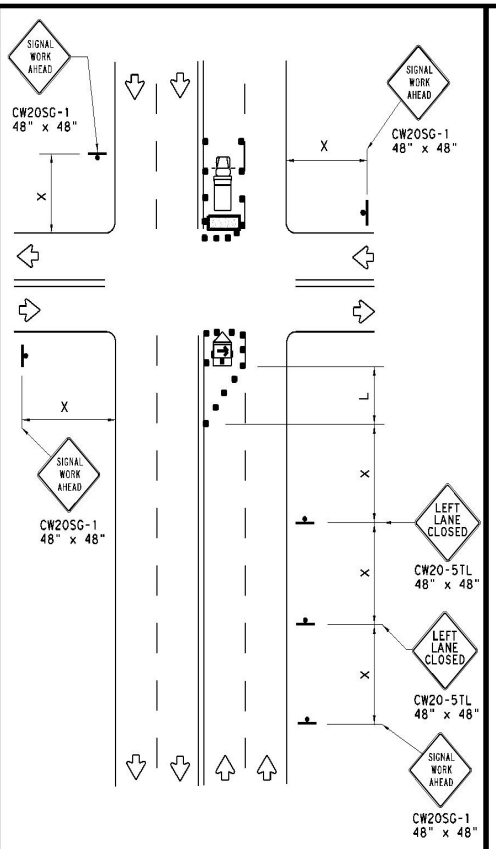

FAR SIDE LEFT LANE CLOSURE

SHORT DURATION OR SHORT TERM STATIONARY

LEGEND			
	Type 3 Barricade		Channelizing Devices
	Heavy Work Vehicle		Truck Mounted Attenuator (TMA)
	Trailer Mounted Flashing Arrow Board	M	Portable Changeable Message Sign (PCMS)
	Sign		Traffic Flow
	Flag		Flagger

Posted Speed *	Formula	Minimum Desirable Taper Lengths ** 10' Offset	11' Offset	12' Offset	Suggested Maximum Spacing of Channelizing Devices On a Taper	On a Tangent	Minimum Sign Spacing "X" Distance	Suggested Longitudinal Buffer Space "B"
30	$L=\frac{WS^2}{60}$	150'	165'	180'	30'	60'	120'	90'
35		205'	225'	245'	35'	70'	160'	120'
40		265'	295'	320'	40'	80'	240'	155'
45	L=WS	450'	495'	540'	45'	90'	320'	195'
50		500'	550'	600'	50'	100'	400'	240'
55		550'	605'	660'	55'	110'	500'	295'
60		600'	660'	720'	60'	120'	600'	350'
65		650'	715'	780'	65'	130'	700'	410'
70		700'	770'	840'	70'	140'	800'	475'
75		750'	825'	900'	75'	150'	900'	540'

* Conventional Roads Only

** Taper lengths have been rounded off.
L=Length of Taper(FT) W=Width of Offset(FT) S=Posted Speed(MPH)

WORKERS IN BUCKET TRUCKS SHALL NOT WORK ABOVE OPEN LANES OF TRAFFIC.

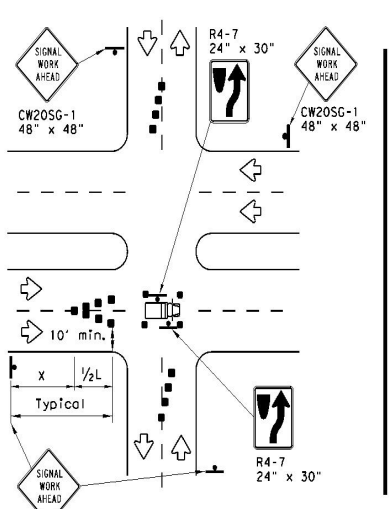

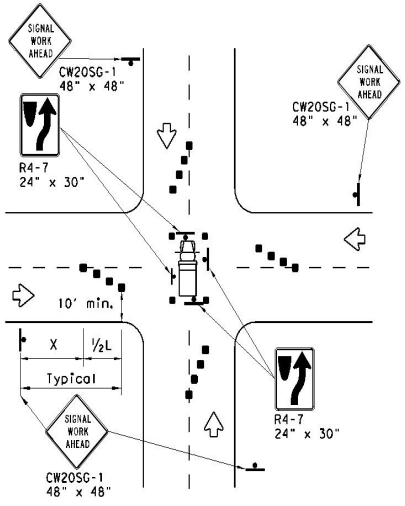

OPERATIONS IN THE INTERSECTION

SHORT DURATION

GENERAL NOTES

1. The minimum size channelizing device is the 28" cone. 42" Two-piece cones, drums, vertical panels or barricades will be required when the device must be left unattended at night.
2. Obstructions or hazards at the work area shall be clearly marked and delineated at all times.
3. Flaggers and Flagger Symbol (CW20-7) signs may be required according to field conditions.
4. Vehicles parked in roadway shall be equipped with at least two high intensity rotating, flashing, oscillating or strobe type lights.
5. High level warning devices (flag trees) may be used at corners of the vehicle.
6. When work operations are performed on existing signals, the signals may be placed in flashing red mode when approved by the engineer. If existing signals do not have power, All-Way Stop (R1-1 and R1-3P) signs may be implemented when approved by the engineer.
7. For Short-Term Stationary work the buffer space "B" from the above table should be used if field conditions permit. For Short Duration (less than 1 hour) any buffer space provided will enhance the safety of the setup.
8. The arrow board at this location may be omitted for Short Duration work if the work vehicle has an arrow board in operation. As an option, the arrow board may be placed at the end of the taper in the closed lane if space is not available at the beginning of the taper.
9. Signs and devices for the NEAR SIDE LANE CLOSURE may be altered for a left lane closure by using a LEFT LANE CLOSED (CW20-5TL) and adding channelizing devices on the centerline to protect the work space from opposing traffic.

SHEET 1 OF 2

Texas Department of Transportation

Traffic Operations Division Standard

TRAFFIC SIGNAL WORK TYPICAL DETAILS

WZ(BTS-1)-13

FILE: wzbts-13.dgn	DN: TxDOT	CK: TxDOT	DW: TxDOT	CK: TxDOT
©TxDOT April 1992	CONT	SECT	JOB	HIGHWAY
REVISIONS				
2-98 10-99 7-13	DIST	COUNTY		SHEET NO.
4-98 3-03				40

DATE:
FILE:

DISCLAIMER:
The use of this standard is governed by the "Texas Engineering Practice Act". No warranty of any kind is made by TxDOT for any purpose whatsoever. TxDOT assumes no responsibility for the conversion of this standard to other formats or for incorrect results or damages resulting from its use.

DATE:
FILE:

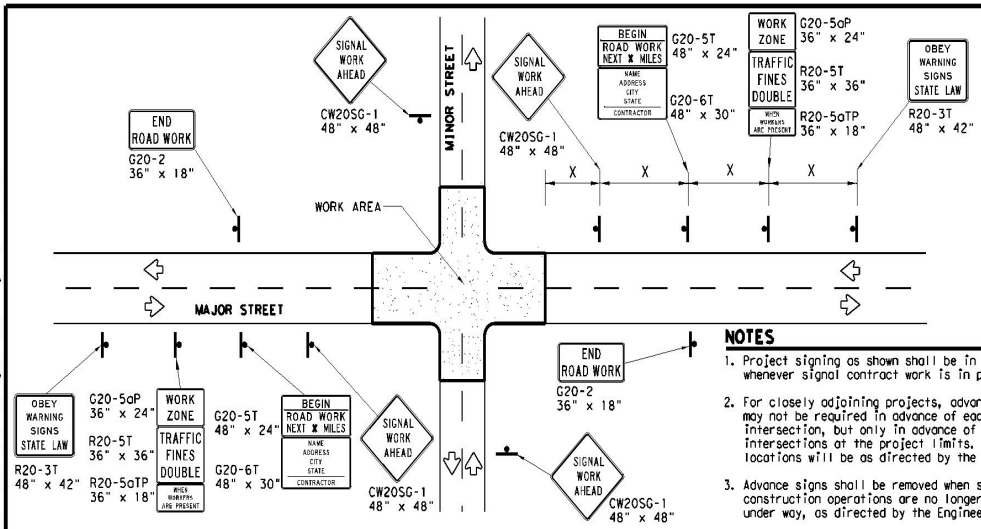

TYPICAL ADVANCE SIGNAL PROJECT SIGNING

FOR LONG TERM and INTERMEDIATE-TERM STATIONARY WORK OPERATIONS

NOTES

1. Project signing as shown shall be in place whenever signal contract work is in progress.
2. For closely adjoining projects, advance signing may not be required in advance of each intersection, but only in advance of the intersections at the project limits. Actual locations will be as directed by the Engineer.
3. Advance signs shall be removed when signal construction operations are no longer under way, as directed by the Engineer.
4. Warning sign spacing shown is typical for both directions.
5. See the Table on sheet 1 of 2 for Typical warning sign spacing.

GENERAL NOTES FOR WORK ZONE SIGNS

1. Signs shall be installed and maintained in a straight and plumb condition.
2. Wooden sign posts shall be painted white.
3. Barricades shall NOT be used as sign supports.
4. Nails shall NOT be used to attach signs to any support.
5. All signs shall be installed in accordance with the plans or as directed by the Engineer.
6. The Contractor shall furnish the sign design shown in the plans or in the "Standard Highway Sign Designs for Texas" (SHSD).
7. The Contractor shall furnish sign supports and substrates listed in the "Compliant Work Zone Traffic Control Device List" (CWZTCD), installed as per the manufacturer's recommendations.
8. Temporary signs that have damaged or cracked substrates and/or damaged or marred reflective sheeting shall be replaced as directed by the Engineer.
9. Identification markings may be shown only on the back of the sign substrate. The maximum height of letters and/or company logos used for identification shall be 1".
10. Damaged wood posts shall be replaced. Splicing wood posts will not be allowed.

DURATION OF WORK

1. Work zone durations are defined in Part 6, Section 6G.02 of the Texas Manual on Uniform Traffic Control Devices (TMUTCD).

SIGN MOUNTING HEIGHT

1. Sign height of Long-term/Intermediate-term warning signs shall be as shown on Figure 6F-1 of the TMUTCD.
2. Sign height of Short-term/Short Duration warning signs shall be as shown on Figure 6F-2 of the TMUTCD.
3. Regulatory signs shall be mounted at least 7 feet, but not more than 9 feet, above the paved surface regardless of work duration.

REMOVING OR COVERING

1. When sign messages may be confusing or do not apply, the signs shall be removed or completely covered, unless otherwise approved by the Engineer.
2. When signs are covered, the material used shall be opaque, such as heavy mil black plastic, or other materials which will cover the entire sign face and maintain their opaque properties under automobile headlights at night without damaging the sign sheeting. Burlap, or heavy materials such as plywood or aluminum shall not be used to cover signs.
3. Duct tape or other adhesive material shall NOT be affixed to a sign face.
4. Signs and anchor stubs shall be removed and holes back filled upon completion of the work.

REFLECTIVE SHEETING

1. All signs shall be retroreflective and constructed of sheeting meeting the requirements of the DMS and color usage table shown on this sheet.

SIGN SUPPORT WEIGHTS

1. Weights used to keep signs from turning over should be sandbags filled with dry, cohesionless material.
2. The sandbags will be tied shut to keep the sand from spilling and to maintain a constant weight.
3. Rock, concrete, iron, steel or other solid objects will not be permitted for use as sign support weights.
4. Sandbags should weigh a minimum of 35 lbs and a maximum of 50 lbs.
5. Sandbags shall be made of a durable material that tears upon vehicular impact. Rubber, such as tire inner tubes, shall not be used.
6. Rubber ballasts designed for channelizing devices should not be used for ballast on portable sign supports. Sign supports designed and manufactured with rubber bases may be used when shown on the CWZTCD list.
7. Sandbags shall only be placed along or laid over the base supports of the traffic control device and shall not be suspended above ground level or hung with rope, wire, chains or other fastners. Sandbags shall be placed along the length of the skids to weigh down the sign support.
8. Sandbags shall NOT be placed under the skid and shall not be used to level sign supports placed on slopes.

LEGEND	
	Sign
	Channelizing Devices
	Type 3 Barricade

DEPARTMENTAL MATERIAL SPECIFICATIONS	
SIGN FACE MATERIALS	DMS-8300
FLEXIBLE ROLL-UP REFLECTIVE SIGNS	DMS-8310

COLOR	USAGE	SHEETING MATERIAL
ORANGE	BACKGROUND	TYPE B_{FL} OR TYPE C_{FL} SHEETING
WHITE	BACKGROUND	TYPE A SHEETING
BLACK	LEGEND & BORDERS	ACRYLIC NON-REFLECTIVE SHEETING

Only pre-qualified products shall be used. A copy of the "Compliant Work Zone Traffic Control Devices List" (CWZTCD) describes pre-qualified products and their sources and may be found at the following web address:
http://www.txdot.gov/txdot_library/publications/construction.htm

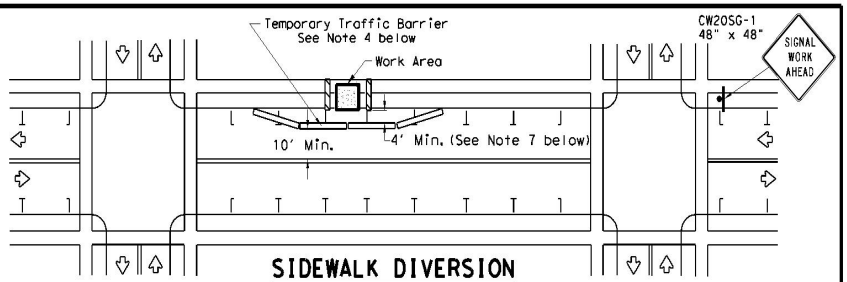

SIDEWALK DIVERSION

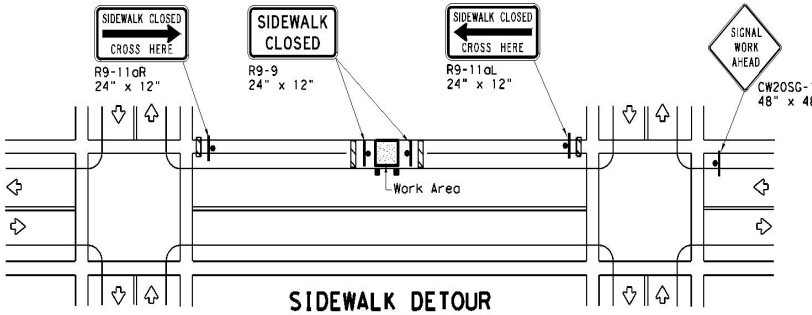

SIDEWALK DETOUR

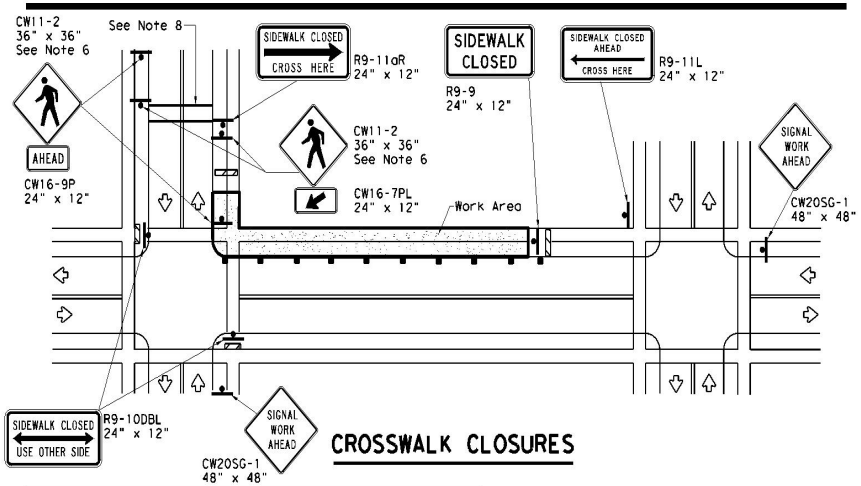

CROSSWALK CLOSURES

PEDESTRIAN CONTROL

1. Holes, trenches or other hazards shall be adequately protected by covering, delineating or surrounding the hazard with orange plastic pedestrian fencing or longitudinal channelizing devices, or as directed by the Engineer.
2. "CROSSWALK CLOSURES" as detailed above will require the Engineer's approval prior to installation.
3. R9 series signs shown may be placed on supports detailed on the BC standards or CWZTCD list, or when fabricated from approved lightweight plastic substrates, they may be mounted on top of a plastic drum at or near the location shown.
4. For speeds less than 45 mph longitudinal channelizing devices may be used instead of traffic barriers when approved by the Engineer. Attenuation of blunt ends and installation of water filled devices shall be as per BC(9) and manufacturer's recommendations.
5. Location of devices are for general guidance. Actual device spacing and location must be field adjusted to meet actual conditions.
6. Where pedestrians with visual disabilities normally use the closed sidewalk Detectable Pedestrian Barricades should be used instead of the Type 3 Barricades shown.
7. The width of existing sidewalk should be maintained if practical.
8. Pavement markings for mid-block crosswalks shall be paid for under the appropriate bid items.
9. When crosswalks or other pedestrian facilities are closed or relocated, temporary facilities shall be detectable and shall include accessibility features consistent with the features present in the existing pedestrian facility.

SHEET 2 OF 2

Texas Department of Transportation

Traffic Operations Division Standard

TRAFFIC SIGNAL WORK BARRICADES AND SIGNS

WZ(BTS-2)-13

FILE:	wzbts1x.dgn	DN: TxDOT	CK: TxDOT	DW: TxDOT	CK: TxDOT
©TxDOT April 1992		CONT	SECT	JOB	HIGHWAY
REVISIONS					
2-98 10-99 7-13		DIST	COUNTY		SHEET NO.
4-98 3-03					4

115

PACKET 598
July 11, 2023

GENERAL NOTES:

1. Details show a typical warning sign with two flashing beacon heads, other arrangements are possible. When only one beacon is required, install the upper beacon.

2. See Item 685, "Roadside Flashing Beacon Assemblies" for further requirements.

3. See SMD standard sheets for lateral and vertical clearances and sign mounting details. Install signs as shown on the sign layout sheets.

4. Use either a Screw-In Type Anchor Foundation or a Drilled Shaft Foundation as shown elsewhere in the plans. When plans require a Drilled Shaft Foundation, see standard sheet TS-FD. Install the Screw-In Type Anchor Foundation as per manufacturer's recommendations. On a slope, install one edge at ground level. Screw-In/Drilled Shaft Foundation is subsidiary to Item 685. Installation of a ground rod is not required for solar powered flashing beacon assemblies.

5. When used, provide Screw-In Type Anchor Foundations as shown on TxDOT's Material Producer List (MPL) in the file "Highway Traffic Signals".

6. Install beacon heads as shown here, as shown elsewhere on the plans, or as directed. Use hardware specifically designed for mounting beacon heads on poles.

7. Conduit in foundation and within 6 in. of foundation is subsidiary to the Item 685, "Roadside Flashing Beacon Assemblies."

8. Unless otherwise shown on the plans, pole shaft shall be one piece, Schedule 40 Aluminum pipe, ASTM B429 or B221 (Alloy 6061-T6 only). Aluminum conduit will not develop the necessary strength and will not be allowed.

9. Per manufacturer's recommendations, engage all threads on the pedestal pole base and pipe unless the pipe is fully seated into base. In high winds, use a pole and base collar assembly to add strength and prevent loosening of connection.

10. Provide single pole non-fused watertight breakaway electrical connectors for frangible pedestal pole bases, as shown on TxDOT's MPL in the file "Roadway Illumination and Electrical Supplies." Approved models are listed under Item 685. For ungrounded (hot) conductors, install a breakaway connector with a dummy fuse slug). For grounded (neutral) conductors, install a breakaway connector with a white colored marking and a permanently installed dummy fuse (slug).

11. Provide clearance as shown above the sidewalk or pavement grade at the edge of the road. When a bottom beacon is not used, mount the bottom of the sign at least 7 ft. above the sidewalk or pavement grade at the edge of the road.

12. Make connections to ground rods according to NEC. Ground rod clamps shall be listed for their intended purpose.

13. Ensure height of conduit and ground rod is below top of anchor bolts.

DISCLAIMER:
The use of this standard is governed by the "Texas Engineering Practice Act". No warranty of any kind is made by TxDOT for any purpose whatsoever. TxDOT assumes no responsibility for the conversion of this standard to other formats or for incorrect results or damages resulting from its use.

DATE:
FILE:

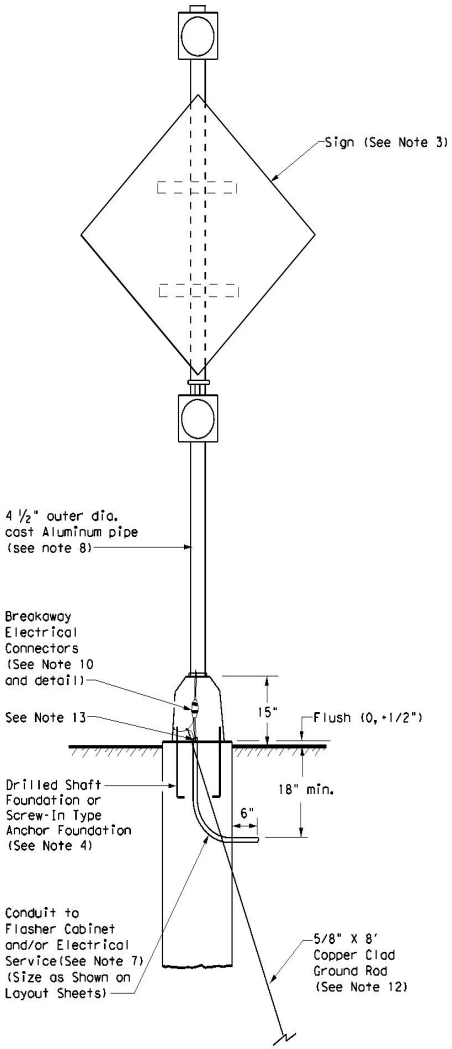

FRONT

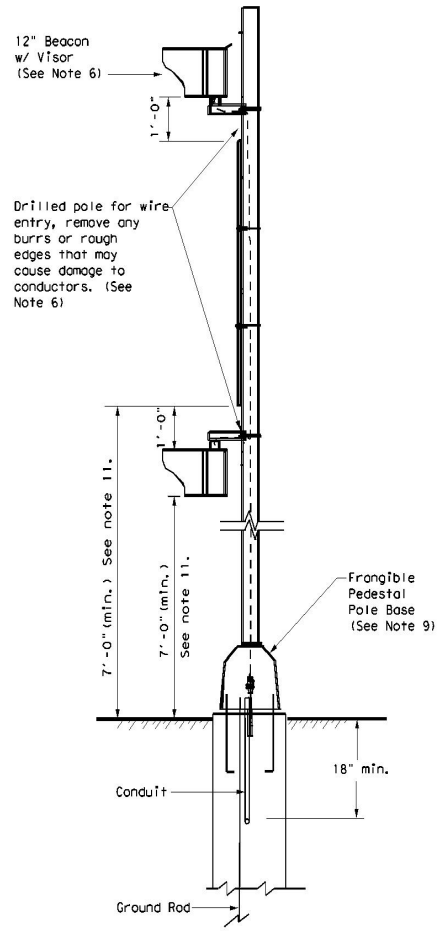

SIDE

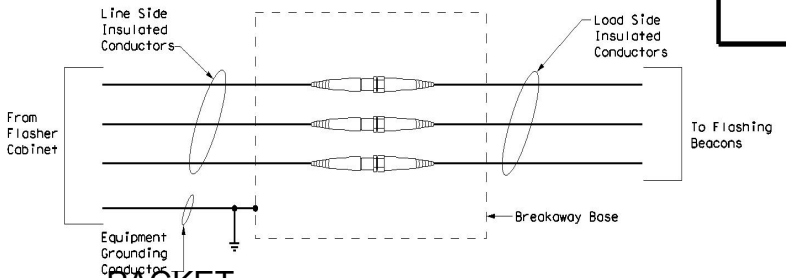

NON-FUSED BREAKAWAY ELECTRICAL CONNECTORS

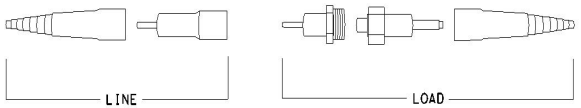

NON-FUSED BREAKAWAY ELECTRICAL CONNECTORS
EXPLODED VIEW

Texas Department of Transportation

Traffic Operations Division Standard

ROADSIDE FLASHING BEACON ASSEMBLY

RFBA-13

FILE: rfba-13.dgn	DN: TxDOT	CK: TxDOT	DW: TxDOT	CK: TxDOT
©TxDOT January 1992	CONT	SECT	JOB	HIGHWAY
REVISIONS				
5-93 12-04	DIST	COUNTY		SHEET NO.
10-93 3-13				42
4-98				

74

PACKET
5.82
July 11, 2023

ACAD Rel: 21.0s (LMS Tech)
Filename: N:\IF\Drawings\8 Traffic\CITY DETAILS\CITY DETAILS.dwg
Last Saved: 3/8/2021 6:26 PM Saved By: 02480

Plot Date: 3/8/2021 6:29 PM Plot By: 02480 Filename: N:\IF\Drawings\8 Traffic\CITY DETAILS\CITY DETAILS.dwg

PACKET

5.83

July 11, 2021

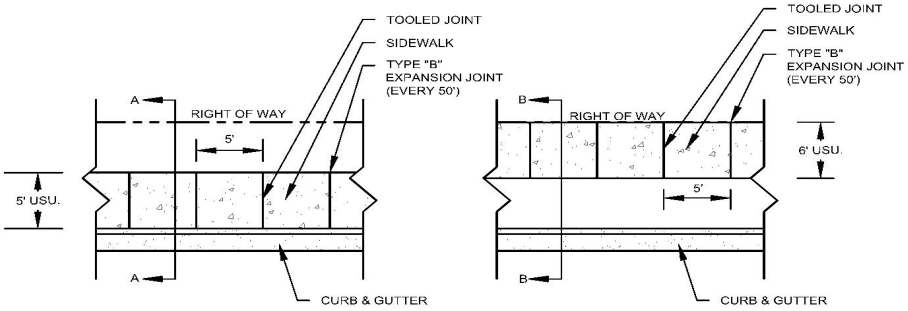

ATTACHED SIDEWALK PLACEMENT

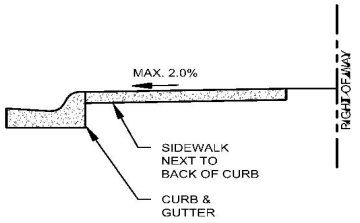

SECTION A - A

DETACHED SIDEWALK PLACEMENT

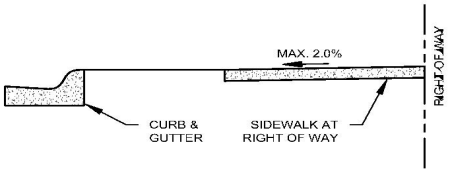

SECTION B - B

NOTES:

1. CONCRETE TO BE CITY OF MIDLAND CLASS "A" AND HAVE A MINIMUM 28 DAY COMPRESSION STRENGTH OF 3000 PSI. USE FIBER REINFORCED CONCRETE PAVEMENT THROUGHOUT.
2. SIDEWALK TO BE A MINIMUM OF 5' WIDE AND 4" THICK.
3. SIDEWALKS TO HAVE TYPE A SAWCUT JOINTS OR TOOLED JOINTS EVERY 5'.
4. TYPE "B" EXPANSION JOINTS TO BE LOCATED AT ALL PEDESTRIAN ACCESS RAMPS AND WHEREVER NEW SIDEWALK IS PLACED ADJACENT TO EXISTING CONCRETE.
5. ATTACHED SIDEWALK WILL BE LOCATED ADJACENT TO THE BACK OF CURB.
6. DETACHED SIDEWALK WILL BE LOCATED ADJACENT TO THE RIGHT-OF-WAY.
7. SIDEWALK CROSS-SLOPE MAY NOT EXCEED 2.0%.
8. ALL EXPOSED SIDEWALK EDGES TO HAVE A 1/2" RADIUS.
9. WHERE OBSTRUCTION IN SIDEWALK EXIST, THERE SHALL BE A 3' MINIMUM CLEARANCE. SIDEWALK LOCATION MAY BE SHIFTED WITH THE APPROVAL OF THE CITY ENGINEER.
10. ALL SIDEWALKS WITH A CONCRETE SURFACE SHALL HAVE A COURSE BROOM FINISH OR OTHER ROUGH NON-SKID TYPE FINISH AS APPROVED BY THE CITY ENGINEER.
11. MATERIALS AND CONSTRUCTION METHODS TO CONFORM TO THE CITY OF MIDLAND STANDARDS AND SPECIFICATIONS.
12. CONSTRUCT AS SHOWN UNLESS OTHERWISE APPROVED IN WRITING BY THE CITY ENGINEER.
13. SIDEWALKS IN DOWNTOWN PER CENTRAL BUSINESS DISTRICT POLICY.

MIDLAND Engineering Services	DRAWN: DPM CHECKED: JCF APPROVED: MCC	EFFECTIVE DATE: 10/01/2018	SCALE: NTS
STANDARD SIDEWALK			DETAIL: 225

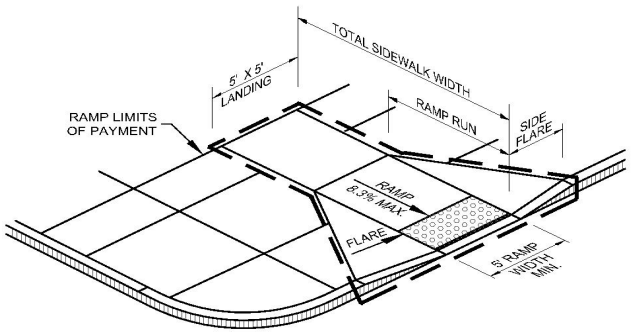

TYPE 1
PERPENDICULAR CURB RAMP

CURB RAMP NOTES:

1. ADJUST CURB RAMP LOCATION AND OR TYPE SO THAT NO OBSTRUCTION IS LOCATED WITHIN THE LANDING AREA.
2. ALL SLOPES ARE MAXIMUM ALLOWABLE. THE LEAST POSSIBLE SLOPE THAT WILL STILL DRAIN PROPERLY SHOULD BE USED.
3. LANDINGS SHALL BE 5'X 5' MINIMUM WITH A MAXIMUM 2% SLOPE IN ANY DIRECTION. WHERE OBSTRUCTIONS EXIST, THERE SHALL BE A 3' MINIMUM CLEARANCE IN WIDTH AND LENGTH OF THE LANDING.
4. MANEUVERING SPACE AT THE BOTTOM OF CURB RAMPS SHALL BE A MINIMUM OF 4'X4' WHOLLY CONTAINED WITHIN THE CROSSWALK AND TO THE ENTIRE OUTSIDE OF THE PARALLEL VEHICULAR TRAVEL PATH.
5. MAXIMUM ALLOWABLE CROSS SLOPE ON SIDEWALK AND CURB RAMP SURFACES IS 2%.
6. CURB RAMPS WITH RETURNED CURBS MAY BE USED ONLY WHERE PEDESTRIANS WOULD NOT NORMALLY WALK ACROSS THE RAMP, EITHER BECAUSE THE ADJACENT SURFACE IS PLANTING OR OTHER NON-WALKING SURFACE OR BECAUSE THE SIDE APPROACH IS SUBSTANTIALLY OBSTRUCTED. OTHERWISE, PROVIDE FLARED SIDES.
7. ADDITIONAL INFORMATION ON CURB RAMP LOCATION, DESIGN, LIGHT REFLECTIVE VALUE AND TEXTURE MAY BE FOUND IN THE CURRENT EDITION OF THE TEXAS ACCESSIBILITY STANDARDS (TAS) AND 16 TAC 68.102.
8. AT INTERSECTIONS WHERE CROSSWALK MARKINGS ARE NOT REQUIRED, CURB RAMPS SHALL BE ALIGNED WITH THEORETICAL CROSSWALKS,OR AS DIRECTED BY THE ENGINEER.
9. PROVIDE A SMOOTH TRANSITION WHERE THE CURB RAMPS CONNECT TO THE STREET.
10. FLARE SLOPE SHALL NOT EXCEED 10% MEASURED ALONG CURB LINE.
11. ALL RAMPS AND LANDINGS WITH A CONCRETE SURFACE SHALL HAVE A COURSE BROOM FINISH OR OTHER ROUGH NON-SKID TYPE FINISH AS APPROVED BY THE ENGINEER.
12. PLACE 6" OF CONCRETE IN RAMPS, LANDINGS, AND FLARES THAT ARE LOCATED AT THE RETURNS ADJACENT TO THE BACK OF CURB OF ARTERIAL STREETS AND COMMERCIAL SITES.

GENERAL NOTES:

1. CONCRETE TO BE CITY OF MIDLAND CLASS "A" WITH A MINIMUM 28 DAY COMPRESSION STRENGTH OF 3000 PSI. USE FIBER REINFORCED CONCRETE THROUGHOUT.
2. MATERIALS AND CONSTRUCTION METHODS TO CONFORM TO THE CITY OF MIDLAND STANDARDS AND SPECIFICATIONS UNLESS OTHERWISE DIRECTED BY ADA STANDARDS AND RESOURCES.

MIDLAND Engineering Services	DRAWN: DPM CHECKED: JCF APPROVED: MCC	EFFECTIVE DATE: 10/01/2018	SCALE: NTS
PERPENDICULAR CURB RAMP			DETAIL: 232

SEQ. 43 SHEET

NO.	ISSUE	BY	DATE

F&N JOB NO. MDD20173
DATE 08/2020
DESIGNED MRF
DRAWN MRF
REVISED
CHECKED NAH
FILE NAME CITY DETAILS.dwg

VERIFY SCALE Bar is one inch on original drawing. If not one inch on this sheet, adjust scale. 0 1

CITY OF MIDLAND, TX
ANDREWS HWY AT WOODCREST DR
CIVIL
CITY OF MIDLAND DETAILS

FREESE AND NICHOLS
2711 North Haskell Ave, Suite 3300
Dallas, Texas 75204
Phone — (214) 217-2200
Web — www.freese.com

Freese and Nichols, Inc.
Texas Registered Engineering Firm F-2144

KEVIN R. ST. JACQUES
68700
LICENSED PROFESSIONAL ENGINEER
3-15-21

ACAD Rel: 21.0s (LMS Tech)
Filename: N:\IF\Drawings\8_Traffic\CITY DETAILS\CITY DETAILS.dwg
Last Saved: 3/8/2021 6:26 PM Saved By: 02480

Plot Date: 3/8/2021 6:30 PM Plot By: 02480 Filename: N:\IF\Drawings\8_Traffic\CITY DETAILS\CITY DETAILS.dwg

PACKET

5.84

July 11, 2023

DETECTABLE WARNING SURFACE NOTES:

1. DETECTABLE WARNING SURFACE SUCH AS ARMOR-TILE ADA SOUND AMPLIFYING DETECTABLE/TACTILE WARNING SURFACE TILE OR EQUAL AND APPROVED BY THE ENGINEER AS MEETING ALL REQUIREMENTS OF ASTM C-936, C-33.
2. CURB RAMPS MUST CONTAIN A DETECTABLE WARNING SURFACE THAT CONSISTS OF RAISED TRUNCATED DOMES COMPLYING WITH SECTION 7.05 DETACHABLE WARNINGS OF THE TEXAS ACCESSIBILITY STANDARDS (TAS). THE SURFACE MUST CONTRAST VISUALLY WITH ADJOINING SURFACES, INCLUDING SIDE FLARES. FURNISH DARK BROWN OR DARK RED DETECTABLE WARNING SURFACE ADJACENT TO UNCOLORED CONCRETE,UNLESS SPECIFIED ELSEWHERE IN THE PLANS.
3. DETECTABLE WARNING SURFACES MUST BE SLIP RESISTANT AND NOT ALLOW WATER TO ACCUMULATE.
4. ALIGN TRUNCATED DOMES IN THE DIRECTION OF PEDESTRIAN TRAVEL WHEN ENTERING THE STREET.
5. SHADED AREAS INDICATE THE APPROXIMATE LOCATION FOR THE DETECTABLE WARNING SURFACE FOR EACH CURB RAMP TYPE.
6. DETECTABLE WARNING SURFACES SHALL BE A MINIMUM OF 24" IN DEPTH IN THE DIRECTION OF PEDESTRIAN TRAVEL.
7. DETECTABLE WARNING SURFACES SHALL BE LOCATED SO THAT THE EDGE NEAREST THE CURB LINE IS A MINIMUM OF 6" AND A MAXIMUM OF 10" FROM THE EXTENSION OF THE FACE OF CURB. DETECTABLE WARNING SURFACES MAY BE CURVED ALONG THE CORNER RADIUS.
8. SINGLE TILE PLATES COLONIAL RED COLOR.

GENERAL NOTES:

1. CONCRETE TO BE CITY OF MIDLAND CLASS "A" WITH A MINIMUM 28 DAY COMPRESSION STRENGTH OF 3000 PSI. USE FIBER REINFORCED CONCRETE THROUGHOUT.
2. MATERIALS AND CONSTRUCTION METHODS TO CONFORM TO THE CITY OF MIDLAND STANDARDS AND SPECIFICATIONS UNLESS OTHERWISE DIRECTED BY ADA STANDARDS AND RESOURCES.

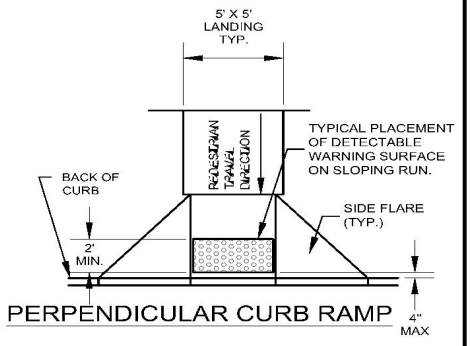

PERPENDICULAR CURB RAMP

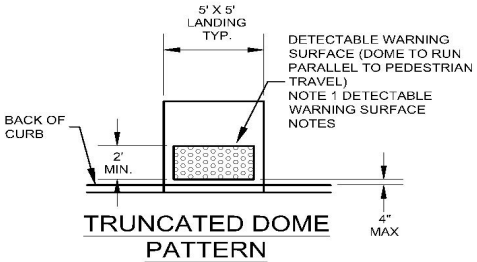

TRUNCATED DOME PATTERN

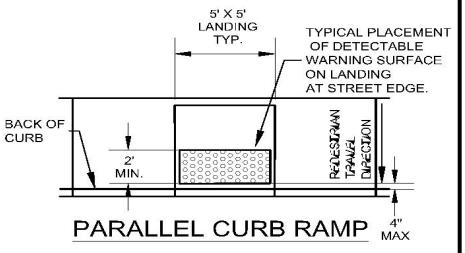

PARALLEL CURB RAMP

DRAWN: DPM	EFFECTIVE DATE: 10/01/2018	SCALE: NTS	DETAIL:
CHECKED: JCF	DETECTABLE WARNING SURFACE		233
APPROVED: MCC			

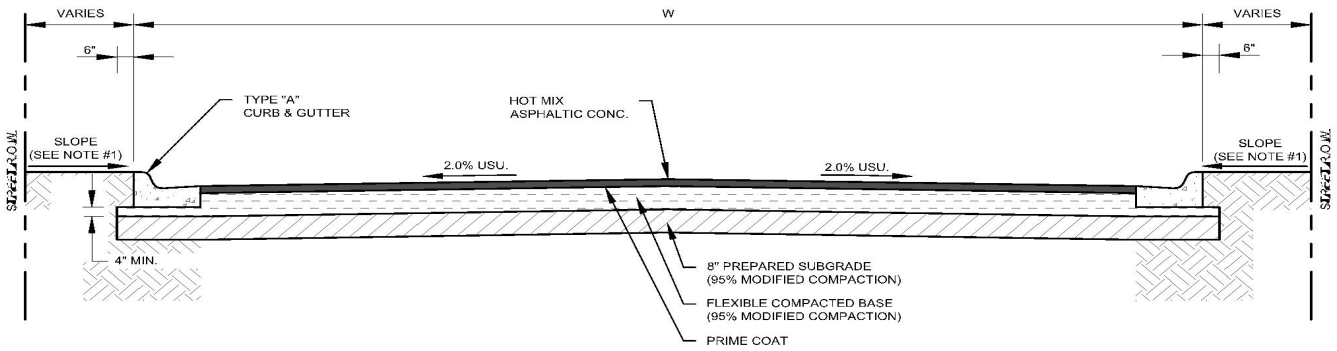

STREET DIMENSIONS			
W (FT)	ASPHALT THICKNESS (IN)	FLEXIBLE COMPACTED BASE THICKNESS (IN)	ASPHALT TYPE
*37	2D	8	TYPE "D"
*41	2D	8	
47	2D & 2C	8	TYPE "D" OVER TYPE "C"
77	2D & 3C	12	
79	2D & 3C	12	
113	2D & 3C	12	
TABLE THICKNESSES SHOWN ARE THE MINIMUM UNLESS OTHERWISE DIRECTED BY THE PLANS.			
* REGARDLESS OF WIDTH, ROADS CLASSIFIED AS COLLECTOR ROADS MUST HAVE 2" TYPE "D" OVER 2" TYPE "C" ASPHALT WITH 8" BASE AND ROADS CLASSIFIED AS ARTERIAL ROADS MUST HAVE 2" TYPE "D" OVER 3" TYPE "C" ASPHALT WITH 12" BASE.			

NOTES:

1. THE MAXIMUM SLOPE OF 1/4" / FT TO BE MEASURED FROM THE TOP OF CURB AND TO APPLY TO THE FULL WIDTH OF THE AREA BETWEEN THE BACK OF CURB AND THE R.O.W.
2. FLEXIBLE COMPACTED BASE TO BE PLACED IN LIFTS NO THICKER THAN 6".
3. WHEN MULTIPLE LAYERS OF ASPHALT ARE PLACED A TACK COAT MUST BE PLACED BETWEEN EACH PAIR OF ASPHALT LAYERS.
4. APPLY TACK COAT TO ALL CONCRETE SURFACES ADJACENT TO ASPHALT SURFACES AND TO ALL EXISTING ASPHALT SURFACES ADJACENT TO NEW ASPHALT SURFACES.
5. MATERIALS AND CONSTRUCTION METHODS TO CONFORM TO THE CITY OF MIDLAND STANDARDS AND SPECIFICATIONS.
6. CONSTRUCT AS SHOWN UNLESS OTHERWISE APPROVED IN WRITING BY THE CITY ENGINEER.

DRAWN: DPM	EFFECTIVE DATE: 10/01/2018	SCALE:	DETAIL:
CHECKED: JCF	STANDARD STREET CROWN CROSS SECTION		201
APPROVED: MCC			

SEQ. 44 SHEET

NO.	ISSUE	BY	DATE

F&N JOB NO. MDD20173
DATE 08/2020
DESIGNED MRF
DRAWN MRF
REVISED
CHECKED NAH
FILE NAME CITY DETAILS.dwg

VERIFY SCALE Bar is one inch on original drawing. If not one inch on this sheet, adjust scale. 0 1

CITY OF MIDLAND, TX
ANDREWS HWY AT WOODCREST DR
CIVIL
CITY OF MIDLAND DETAILS

FREESE AND NICHOLS
2711 North Haskell Ave, Suite 3300
Dallas, Texas 75204
Phone – (214) 217-2200
Web – www.freese.com

Freese and Nichols, Inc.
Texas Registered Engineering Firm F-2144

KEVIN R. ST. JACQUES
68700
LICENSED PROFESSIONAL ENGINEER
3-15-21

ACAD Rel: 21.0s (LMS Tech)
Filename: N:\IF\Drawings\8_Traffic\CITY DETAILS\CITY DETAILS.dwg
Last Saved: 3/8/2021 6:26 PM Saved By: 02480

Plot Date: 3/8/2021 6:30 PM Plot By: 02480 Filename: N:\IF\Drawings\8_Traffic\CITY DETAILS\CITY DETAILS.dwg

PACKET

5.85

July 11, 2023

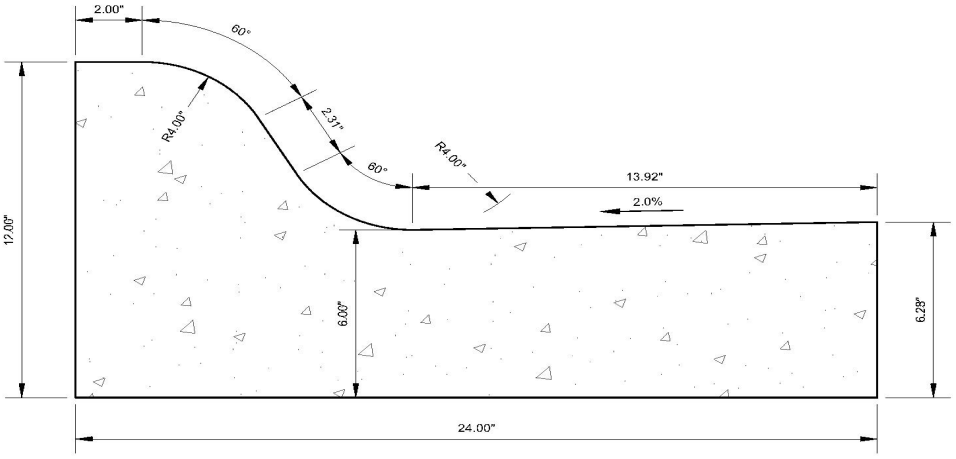

NOTES:

1. CONCRETE TO BE CITY OF MIDLAND CLASS "C", 3600 PSI. USE FIBER REINFORCED CONCRETE PAVEMENT THROUGHOUT.
2. SEAL CONCRETE JOINT AT FACE OF CURB WHEN ADJACENT TO CONCRETE PAVEMENT AND NOT INTEGRAL WITH THAT PAVEMENT.
3. MATERIALS AND CONSTRUCTION METHODS TO CONFORM TO CITY OF MIDLAND STANDARDS AND SPECIFICATIONS.
4. CONSTRUCT AS SHOWN UNLESS OTHERWISE APPROVED IN WRITING BY THE CITY ENGINEER.

MIDLAND Engineering Services	DRAWN: DPM CHECKED: JCF APPROVED: MCC	EFFECTIVE DATE: 10/01/2018	SCALE: NTS
TYPE A STANDARD CURB AND GUTTER			DETAIL: 205

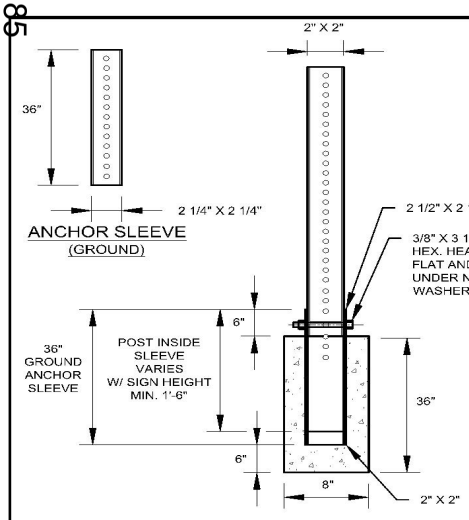

SINGLE POST FOUNDATION DETAIL
(FOR LOOSE SOILS AND EXISTING PAVED AREAS)

NOTES:

1. ALL DIMENSIONS ARE IN INCHES, EXCEPT AS NOTED.
2. ALL SQUARE PERFORATED POSTS SHALL BE 2" X 2" TYPICALLY 12' LONG
3. FOR ESTIMATING PURPOSES, CONCRETE QUANTITY PER POST IS 1.0 CU/FT.
4. MATERIALS AND CONSTRUCTION METHODS TO CONFORM TO THE CITY OF MIDLAND STANDARDS AND SPECIFICATIONS.
5. CONSTRUCT AS SHOWN UNLESS OTHERWISE APPROVED IN WRITING BY THE CITY ENGINEER.

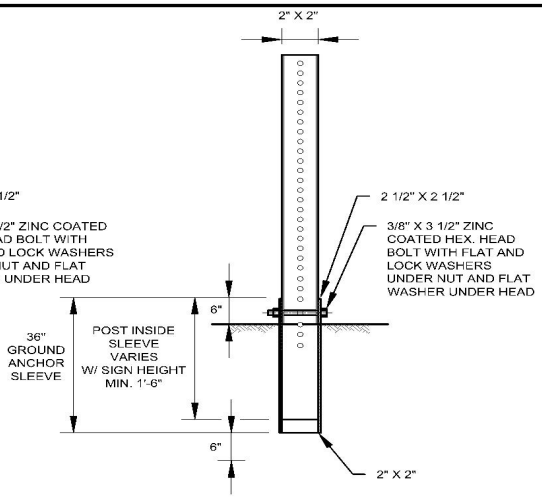

SINGLE DRIVEN POST
(FOR FIRM SOIL CONDITIONS)

NOTES:

1. ALL DIMENSIONS ARE IN INCHES, EXCEPT AS NOTED.
2. ALL SQUARE PERFORATED POSTS SHALL BE 2" X 2" TYPICALLY 12' LONG
3. FOR ESTIMATING PURPOSES, CONCRETE QUANTITY PER POST IS 1.0 CU/FT.
4. MATERIALS AND CONSTRUCTION METHODS TO CONFORM TO THE CITY OF MIDLAND STANDARDS AND SPECIFICATIONS.
5. CONSTRUCT AS SHOWN UNLESS OTHERWISE APPROVED IN WRITING BY THE CITY ENGINEER.

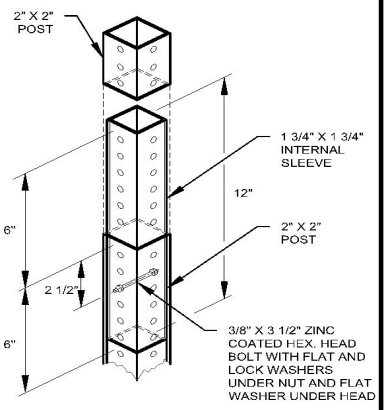

SINGLE POST
PERMISSIBLE SPLICE
(NOT ALLOWED ON TELESCOPING POSTS)

NOTES:

1. IF ANY POST SECTION IS SHORTER THAN THE PANEL HEIGHT, THE FIELD SPLICE SHALL BE BEHIND THE PANEL.
2. FIELD SPLICES ARE NOT PERMITTED ON TELESCOPING POSTS.
3. MATERIALS AND CONSTRUCTION METHODS TO CONFORM TO THE CITY OF MIDLAND STANDARDS AND SPECIFICATIONS.
4. CONSTRUCT AS SHOWN UNLESS OTHERWISE APPROVED IN WRITING BY THE CITY ENGINEER.

MIDLAND Engineering Services	DRAWN: DPM CHECKED: JCF APPROVED: MCC	EFFECTIVE DATE: 10/01/2018	SCALE: NTS
SQUARE PERFORATED SIGN POST, FOUNDATION, & SPLICE DETAILS			DETAIL: 806

SEQ. 45 SHEET

NO.	ISSUE	BY	DATE

F&N JOB NO. MDD20173
DATE 08/2020
DESIGNED MRF
DRAWN MRF
REVISED
CHECKED NAH
FILE NAME CITY DETAILS.dwg

VERIFY SCALE Bar is one inch on original drawing. If not one inch on this sheet, adjust scale. 0 1

CITY OF MIDLAND, TX
ANDREWS HWY AT WOODCREST DR
CIVIL
CITY OF MIDLAND DETAILS

FREESE AND NICHOLS
2711 North Haskell Ave, Suite 3300
Dallas, Texas 75204
Phone – (214) 217-2200
Web – www.freese.com

Freese and Nichols, Inc.
Texas Registered Engineering Firm F-2144



3-15-21

THE CITY OF MIDLAND, TEXAS

AVALON DRIVE AT DEAUVILLE BLVD
TRAFFIC SIGNAL DESIGN

Midland, Texas

NOVEMBER 2019

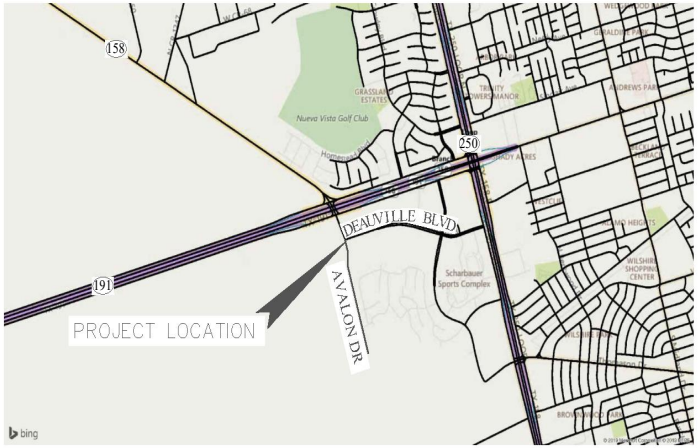

LOCATION MAP
N.T.S.

NORTH

KEVIN R. ST. JACQUES
68700
LICENSED
PROFESSIONAL
ENGINEER
11-22-19

Freese and Nichols, Inc.
Texas Registered Engineering Firm F-2144

FREESE AND NICHOLS

2711 North Haskell Ave, Suite 3300
Dallas, Texas 75204
Phone – (214) 217-2200
Web – www.freese.com

GENERAL

1. SHEET INDEX
2-4. GENERAL NOTES
5. QUANTITY SUMMARY

TRAFFIC SIGNAL

6. EXISTING CONDITIONS
7.TRAFFIC SIGNAL LAYOUT
8. CORNER DETAILS
9. TRAFFIC SIGNAL SUMMARY 1 OF 2
10. TRAFFIC SIGNAL SUMMARY 2 OF 2
11. PAVEMENT MARKINGS

TRAFFIC SIGNAL AND PAVEMENT MARKING DETAILS

12. MA-C-12 MAST ARM CONNECTIONS ##
13. MA-C(ILSN)-12 MAST ARM CONNECTIONS(ILSN) ##
14. MA-D-12 MAST ARM POLE DETAILS ##
15. MA-DPD-12 MAST ARM DAMPING PLATE DETAILS ##
16. SMA-80(1)-12 TRAFFIC SIGNAL SUPPORT STRUCTURES SINGLE MAST ARM ASSEMBLY ##
17. SMA-80(2)-12 TRAFFIC SIGNAL SUPPORT STRUCTURES SINGLE MAST ARM ASSEMBLY ##
18. TS-CF-04 TRAFFIC SIGNAL CONTROLLER CABINET BASE AND PAD ##
19. TS-FD-12 TRAFFIC SIGNAL POLE FOUNDATION ##
20. WV AND IZ-14 WIND VELOCITY AND ICE ZONES ##
21. ED(1)-14 ELECTRICAL DETAILS CONDUITS & NOTES ##
22. ED(2)-14 ELECTRICAL DETAILS CONDUIT SUPPORTS ##
23. ED(3)-14 ELECTRICAL DETAILS CONDUCTORS ##
24. ED(4)-14 ELECTRICAL DETAILS GROUND BOXES ##
25. ED(5)-14 ELECTRICAL DETAILS SERVICE NOTES & DATA ##
26. ED(6)-14 ELECTRICAL DETAILS SERVICE ENCLOSURE & NOTES ##
27. ED(8)-14 ELECTRICAL DETAILS TYPICAL TRAFFIC SIGNAL SYSTEM DETAILS ##
28. ED(9)-14 ELECTRICAL DETAILS ELECTRICAL SERVICE SUPPORT PEDESTAL SERVICE TYPE PS ##
29. ED(11)-14 ELECTRICAL DETAILS DUCT CABLE/HDPE CONDUIT ##
30. ED(12)-14-ELECTRICAL DETAILS BATTERY BOX GROUND BOXES ##
31. PM(1)-12 TYPICAL STANDARD PAVEMENT MARKINGS ##
32. PM(2)-12 POSITION GUIDANCE USING RAISED MARKERS REFLECTORIZED PROFILE MARKINGS ##
33. PM(3)-12 PAVEMENT MARKINGS FOR TWO-WAY LEFT TURN LANES DIVIDED HIGHWAYS AND RURAL LEFT TURN BAYS ##
34. WZ(BTS-1)-13 TRAFFIC SIGNAL WORK TYPICAL DETAILS ##
35. WZ(BTS-2)-13 TRAFFIC SIGNAL WORK BARRICADES AND SIGNS ##
36. STANDARD SIDEWALK (CITY OF MIDLAND STANDARD)
37. PERPENDICULAR CURB RAMP (CITY OF MIDLAND STANDARD)
38. DETECTABLE WARNING SURFACE (CITY OF MIDLAND STANDARD)

THE STANDARD SHEETS SPECIFICALLY IDENTIFIED ABOVE BY A ##
HAVE BEEN ISSUED BY ME AND ARE APPLICABLE TO THIS PROJECT.

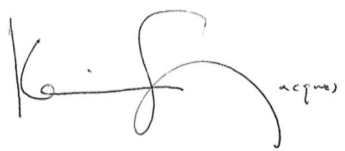

P.E.

11-22-19

DATE

PACKET

5.87

July 11, 2023

Freese and Nichols, Inc.
Texas Registered Engineering Firm F-2144

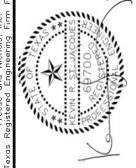

11-22-19

FREESE NICHOLS
2711 North Haskell Ave, Suite 3300
Dallas, Texas 75204
Phone: 214.217.2200
Web: www.freese.com

CITY OF MIDLAND, TX

AVALON DR AT DEAUVILLE BLVD

CIVIL

SHEET INDEX

F&N JOB NO. M0019336
DATE 11/2019
DESIGNED
DRAWN
REVISED
CHECKED
FILE NAME CV-SUMM-SHEET INDEX.dwg

NO. ISSUE | BY | DATE

VERIFY SCALE Bar is one inch on original drawing. If not one inch on this sheet, adjust scale.
0 1"

SHEET

SEQ. 1

ACAD Rel: 21.0s (LMS Tech)
Xrefs: N:\IF\Drawings\1. General\CV-SUMM-SHEET INDEX.dwg
Last Saved: 11/18/2019 4:23 PM Saved By: 02480

Plot Date: 11/18/2019 5:17 PM Plot By: 02480 Filename: N:\IF\Drawings\1. General\CV-SUMM-SHEET INDEX.dwg

GENERAL NOTES:
TRAFFIC SIGNAL INSTALLATION

PLEASE CONTACT THE CITY OF MIDLAND TRAFFIC ENGINEER AT 432-685-7280 SO THAT A REPRESENTATIVE MAY ATTEND THE PRE-CONSTRUCTION MEETING.

UNDERGROUND UTILITIES MAY BE PRESENT WITHIN THE RIGHT-OF-WAY ON THIS PROJECT. FOR SIGNAL, ILLUMINATION, SURVEILLANCE, AND COMMUNICATION AND CONTROL, CONTACT BOTH THE CITY UTILITIES DEPARTMENT AND TRANSPORTATION DIVISION FOR LOCATES A MINIMUM OF 48 HOURS IN ADVANCE OF EXCAVATION.

THE LOCATIONS OF ALL SIGNAL RELATED ITEMS, PAVEMENT MARKINGS, SIGNING, ETC. ARE DIAGRAMMATIC **ONLY** AND MAY BE SHIFTED TO ACCOMMODATE FIELD CONDITIONS AND/OR AS DIRECTED BY ENGINEER.

UNLESS OTHERWISE INDICATED IN THE PLANS OR SPECIFICATIONS, ALL WORK SHALL CONFORM TO THE STANDARDS, DETAILS, AND SPECIFICATIONS OF THE TEXAS DEPARTMENT OF TRANSPORTATION.

ITEM 416: DRILLED SHAFT FOUNDATION

LOCATIONS OF FOUNDATIONS SHOWN ON THE PLANS ARE FOR DIAGRAMMATIC PURPOSES **ONLY** AND MAY BE VARIED TO MEET LOCAL CONDITIONS, SUBJECT TO APPROVAL. STAKE THESE LOCATIONS AND HAVE THEM APPROVED BY THE INSPECTOR BEFORE INSTALLATION OF FOUNDATIONS. THIS WILL ENSURE THAT ALL LUMINAIRES AND MAST ARMS ARE CLEAR OF ALL OVERHEAD LINES AND UNDERGROUND UTILITIES **BEFORE** DRILLING BEGINS.

THE INSPECTOR, TOGETHER WITH THE CONTRACTOR, WILL CALCULATE THE VERTICAL SIGNAL HEAD CLEARANCE BEFORE PLACING ANY TRAFFIC SIGNAL POLE FOUNDATION.

SET ANCHOR BOLTS FOR STRAIN POLES FOR SIGNALS. SET TWO IN TENSION AND TWO IN COMPRESSION. OBTAIN APPROVAL OF ANCHOR BOLT PLACEMENT AS DIRECTED BEFORE PLACING CONCRETE.

NOTIFY THE INSPECTOR 48 HOURS PRIOR TO FORMING AND PLACING CONCRETE IN ANY OF THE SIGNAL POLE AND CONTROLLER FOUNDATIONS. DO NOT PLACE CONCRETE WITHOUT AN INSPECTOR PRESENT. FAILURE TO INFORM THE INSPECTOR AND PROVIDE ADEQUATE TIME TO ARRIVE ON THE JOB SITE MAY RESULT IN REMOVING AND REPLACING THE FOUNDATION.

INSTALL A 5/8"X10' COPPER CLAD GROUND ROD IN EACH TRAFFIC SIGNAL POLE FOUNDATION. THE GROUND ROD FOR EACH FOUNDATION WILL PROTRUDE ABOVE THE FINISH GRADE OF THE FOUNDATION A MINIMUM OF 1" AND A MAXIMUM OF 2".

PROVIDE A SMOOTH FINISH FOR ALL PORTIONS OF DRILL SHAFTS EXTENDING ABOVE PROPOSED GROUND. INCLUDE COST FOR THIS WORK IN THE UNIT BID PRICE FOR THIS ITEM.

TRAFFIC SIGNAL POLE FOUNDATIONS WILL BE PAID FOR ONCE REGARDLESS OF EXTRA WORK CAUSED BY OBSTRUCTIONS.

CONCRETE REMOVAL REQUIRED FOR INSTALLATION OF DRILLED SHAFTS WILL BE SUBSIDIARY TO ITEM 416.

ITEM 421: HYDRAULIC CEMENT CONCRETE

FURNISH MIX DESIGNS TO THE ENGINEER AT LEAST 48 HOURS PRIOR TO PLACING CONCRETE. PROVIDE AN APPROVED PRIVATE LABORATORY CONTRACTOR TO PERFORM THE NEEDED CONCRETE TESTING.

ITEM 449: ANCHOR BOLTS

USE PIPE JOINT COMPOUND THAT IS AN ELECTRICALLY CONDUCTING PROTECTIVE THREAD LUBRICANT COMPOUND TO BE USED ON THE FOUNDATION ANCHOR BOLTS FOR TRAFFIC SIGNAL POLES (CROUSE-HINDS TL-2, 0Z/GEDNEY STL, THOMAS & BETTS KOPR-SHIELD, OR EQUAL).

ITEM 502: BARRICADES, SIGNS, AND TRAFFIC HANDLING

USE TEMPORARY TRAFFIC CONTROL (TTC) FOR THIS PROJECT AS DETAILED ON THE LATEST TEXAS DEPARTMENT OF TRANSPORTATION BC STANDARD PLAN SHEETS, AND WZ (BTS-1 AND BTS-2)-13, AS PROVIDED FOR IN PART VI OF THE TEXAS MANUAL ON UNIFORM TRAFFIC CONTROL DEVICES, AND AS INDICATED ON THE TITLE SHEET.

IN ADDITION TO THE TTC AND THE LATEST WZ STANDARD PLAN SHEETS, INSTALL BARRICADES AND WARNING SIGNS, AS APPROPRIATE, TO ADEQUATELY WARN MOTORISTS. PERMANENT SIGNS MAY BE INSTALLED WHEN CONSTRUCTION IN AN AREA IS COMPLETE AND THEY WILL NOT BE IN CONFLICT WITH THE TRAFFIC CONTROL PLAN FOR THE REMAINDER OF THE JOB.

EXISTING SIGNS ARE TO REMAIN AS LONG AS THEY DO NOT INTERFERE WITH CONSTRUCTION AND THEY DO NOT CONFLICT WITH THE TRAFFIC CONTROL PLAN.

WHEN TRAFFIC IS OBSTRUCTED, ARRANGE WARNING DEVICES IN ACCORDANCE WITH ARRANGEMENTS INDICATED IN THE LATEST EDITION OF THE "TEXAS MANUAL ON UNIFORM TRAFFIC CONTROL DEVICES." WHEN ADVANCED WARNING FLASHING ARROW PANELS AND/OR CHANGEABLE MESSAGE SIGN IS SPECIFIED, HAVE ONE STANDBY UNIT IN GOOD CONDITION AT THE JOB SITE.

COVER OR REMOVE ANY WORK ZONE SIGNS WHEN WORK OR CONDITION REFERENCED IS NOT OCCURRING.

NO WORK WILL BE PERMITTED TO COMMENCE ON THE ROAD BEFORE SUNRISE AND SHALL BE ARRANGED SO THAT ALL MACHINERY AND/OR EQUIPMENT SHALL BE AWAY FROM THE ROADWAY NEAR THE R.O.W. LINE AFTER SUNSET. ANY OPERATIONS REQUIRING LANE CLOSURES SHALL NOT BEGIN BEFORE 9:00 A.M. OR CONTINUE PAST 4:00 P.M. UNLESS OTHERWISE APPROVED BY THE ENGINEER.

DO NOT PLACE BARRICADES, SIGNS, OR ANY OTHER TRAFFIC CONTROL DEVICES WHERE THEY INTERFERE WITH SIGHT DISTANCE AT DRIVEWAYS OR SIDE STREETS. PROVIDE ACCESS TO ALL DRIVEWAYS DURING ALL PHASES OF CONSTRUCTION. ATTENTION IS CALLED TO THE FACT THAT ALL LOCATIONS USED FOR STORING CONSTRUCTION EQUIPMENT AND MATERIALS OF ANY TYPE WITHIN THE RIGHT OF WAY SHALL BE APPROVED BY THE ENGINEER.

USE OF THE RIGHT OF WAY FOR THESE PURPOSES WILL BE RESTRICTED TO THOSE LOCATIONS WHERE DRIVER SIGHT DISTANCE TO BUSINESSES AND SIDE STREET INTERSECTIONS IS NOT OBSTRUCTED AND AT OTHER LOCATIONS WHERE AN UNSIGHTLY APPEARANCE, AS DETERMINED BY THE ENGINEER, WILL NOT EXIST.

REMOVE ANY OBSTRUCTIONS TO EXISTING DRAINAGE DUE TO THE CONTRACTOR'S OPERATIONS AS REQUIRED, AT THE CONTRACTORS EXPENSE.

ITEM 531: SIDEWALKS

THE CURB RAMP LOCATIONS SHOWN IN THE PLANS HAVE TAKEN INTO ACCOUNT THE GEOMETRIC FEATURES OF THE INTERSECTION, ROADWAY GRADES AND THE PAVEMENT MARKINGS. IF ANYTHING CHANGES DURING CONSTRUCTION, THE LOCATION OF CURB RAMPS MUST BE ADJUSTED TO ENSURE THEY MEET TAS/ADAAG REQUIREMENTS.

ITEM 618: CONDUIT

SECURE PERMISSION AND APPROVAL FROM THE PROPER AUTHORITY PRIOR TO CUTTING INTO OR REMOVING ANY SIDEWALKS OR CURBS FOR INSTALLATION OF THIS ITEM.

WHEN HOLES ARE DRILLED THROUGH CONCRETE STRUCTURES, USE A CORING DEVICE. DO NOT USE MASONRY OR CONCRETE DRILLS.

STRUCTURALLY MOUNT JUNCTION BOXES AS SHOWN ON THE PLANS. WHEN USED FOR TRAFFIC SIGNAL INSTALLATIONS, USE BOXES 12"X12"X8", OR AS APPROVED.

USE CONDUIT HANGERS FOR 3 INCH AND LARGER CONDUIT WHEN HANGING CONDUIT FROM STRUCTURES.

WHEN CONDUIT MUST BE PLACED BY TRENCHING IN PAVED AREAS, CUT AND RESTORE PAVEMENT IN ACCORDANCE WITH ITEM 400, ARTICLE 400.3.A.1.B, AND AS SHOWN IN THE PLANS. CUT PAVEMENT USING ONLY APPROVED SAWS. CUTTING AND RESTORING PAVEMENT WILL NOT BE PAID FOR DIRECTLY, BUT WILL BE SUBSIDIARY TO THIS ITEM.

DO NOT PLACE BORING PITS CLOSER THAN 2 FEET FROM THE EDGE OF THE PAVEMENT UNLESS OTHERWISE DIRECTED. DO NOT USE WATER JETTING. WHEN BORING IS USED FOR UNDER PAVEMENT CONDUIT INSTALLATIONS, THE MAXIMUM ALLOWABLE OVER-CUT IS 1" IN DIAMETER. WHEN CONDUITS ARE BORED, DO NOT EXCEED 18 INCHES IN THE VERTICAL AND HORIZONTAL TOLERANCES AS MEASURED FROM THE INTENDED TARGET POINT.

DO NOT USE A PNEUMATICALLY DRIVEN DEVICE FOR PUNCHING HOLES BENEATH THE PAVEMENT (COMMONLY KNOWN AS A "MISSILE").

FURNISH AND INSTALL A NON-METALLIC PULL ROPE IN CONDUIT RUNS IN EXCESS OF 50 FEET.

USE A COLORED CLEANER-PRIMER ON ALL PVC TO PVC JOINTS BEFORE APPLICATION OF PVC CEMENT.

SEAL ALL CONDUIT ENDS WITH A PERMANENTLY SOFT, NON-TOXIC DUCT SEAL. USE A DUCT SEAL THAT DOES NOT ADVERSELY AFFECT OTHER PLASTIC MATERIALS OR CORRODE METALS.

FURNISH AND INSTALL NON-METALLIC PULL ROPES IN CONDUIT INSTALLED FOR FUTURE USE AND CAP USING STANDARD WEATHER-TIGHT CONDUIT CAPS, AS APPROVED. THIS WORK WILL NOT BE PAID FOR DIRECTLY, BUT IS SUBSIDIARY TO THIS ITEM.

2" SCHEDULE 80 PVC WILL BE USED AT THE POWER POLE TO SUPPLY ELECTRICITY TO UNDERGROUND SERVICES.

IF PLACING RM CONDUIT ON BRIDGE STRUCTURES DO SO AS DIRECTED. WHERE PVC, DUCT CABLE, AND HDPE CONDUIT 1" AND LARGER IS ALLOWED AND INSTALLED AS PER TXDOT STANDARDS, PROVIDE A PVC ELBOW IN PLACE OF THE GALVANIZED RIGID METAL ELBOW REQUIRED BY THE ELECTRICAL DETAIL STANDARDS. ENSURE THE PVC ELBOW IS OF THE SAME SCHEDULE RATING AS THE CONDUIT TO WHICH IT IS CONNECTED. ENSURE ONLY A FLAT, HIGH TENSILE STRENGTH POLYESTER FIBER PULL TAPE IS USED FOR PULLING CONDUCTORS THROUGH THE PVC CONDUIT SYSTEM.

THE LOCATIONS OF CONDUIT AND GROUND BOXES ARE DIAGRAMMATIC ONLY AND MAY BE SHIFTED TO ACCOMMODATE FIELD CONDITIONS AS DIRECTED.

ITEM 620: ELECTRICAL CONDUCTORS

TERMINATE **ALL** ELECTRICAL CONDUCTORS FROM THE CONTROLLER AT THE TERMINATION BLOCK IN THE TRAFFIC SIGNAL POLE HAND HOLE WHETHER IN USE OR NOT.

ALL WIRING NOT COVERED BY THE PLANS AND SPECIFICATIONS SHALL BE IN ACCORDANCE WITH THE NATIONAL ELECTRIC CODE (NEC).

WHEN THE SPECIFICATIONS FOR ELECTRICAL ITEMS REQUIRE UL LISTED PRODUCTS, IT WILL BE CONSTRUED TO MEAN UL LISTED OR CSA LISTED.

BOND TOGETHER ANY GROUNDING CONDUCTORS THAT SHARE THE SAME CONDUIT, JUNCTION BOX, GROUND BOX, OR STRUCTURE, AT EVERY ACCESSIBLE POINT IN ACCORDANCE WITH THE NATIONAL ELECTRICAL CODE (NEC).

ITEM 621: TRAY CABLE

ALL PROPOSED TRAY CABLE AND NUMBER OF CONDUCTORS REQUIRED SHALL BE AS SHOWN ON THE PLANS. NO SPLICES SHALL BE ALLOWED.

ITEM 624: GROUND BOXES

LOCATIONS OF GROUND BOXES ARE APPROXIMATE. FINAL LOCATIONS WILL BE AS APPROVED. PROVIDE AN APRON FOR GROUND BOXES AS SHOWN ON STANDARD ED (3)-03.

SLACK CONDUCTORS REQUIRED BY STANDARD SHEET ED(2)-03 WILL BE SUBSIDIARY TO ITEM 624.

CONCRETE REMOVAL REQUIRED FOR INSTALLATION OF GROUND BOXES WILL BE SUBSIDIARY TO ITEM 624.
SEAL GROUND BOXES WITH POLYURETHANE FOAM THAT WILL NOT ADVERSELY AFFECT OTHER PLASTIC MATERIALS OR CORRODE METALS (FROTH-PAK 115 2.75 DENSITY 157833 OR APPROVED EQUAL).

Freese and Nichols, Inc.
Texas Registered Engineering Firm F-2144

11-22-19

FREESE NICHOLS
2711 North Haskell Ave, Suite 3300
Dallas, Texas 75204
Phone: 214-217-2200
Web: www.freese.com

CITY OF MIDLAND, TX
AVALON DR AT DEAUVILLE BLVD
CIVIL
GENERAL NOTES

F&N JOB NO. M0019336
DATE 11/2019
DESIGNED
DRAWN
REVISED
CHECKED
FILE NAME CV-SUMM- GENERAL NOTES.dwg

NO. ISSUE | BY | DATE

VERIFY SCALE Bar is one inch on original drawing. If not one inch on this sheet, adjust scale.
0 1"

SHEET
SEQ. 2

ACAD Rel: 21.0s (LMS Tech)
Admin: N:\IF\Drawings\1. General\CV-SUMM- GENERAL NOTES.dwg
Last Saved: 11/13/2019 11:33 AM Saved By: 02480

Plot Date: 11/18/2019 5:17 PM Plot By: 02480 Filename: N:\IF\Drawings\1. General\CV-SUMM- GENERAL NOTES.dwg

GENERAL NOTES:
TRAFFIC SIGNAL INSTALLATION

ITEM 628: ELECTRICAL SERVICES

CONTACT THE ELECTRIC UTILITY COMPANY TO MAKE ALL NECESSARY ARRANGEMENTS TO PROVIDE POWER FOR THE ELECTRICAL SERVICE SHOWN ON THE PLANS IN ACCORDANCE WITH ARTICLE 628.5 AND THE ELECTRICAL DETAILS, EXCEPT THAT THE CITY OF MIDLAND WILL MAKE APPLICATION TO THE ELECTRIC UTILITY COMPANY FOR SERVICE. BEFORE FABRICATING THE ELECTRICAL SERVICE, CONTACT THE CITY OF MIDLAND SIGNAL SHOP SUPERVISOR (PHONE 432-685-7928), TO MAKE APPLICATION (BILLING ARRANGEMENTS) FOR SERVICE WITH THE ELECTRIC UTILITY COMPANY.

TIME-CHARGE SUSPENSION DUE TO THE AVAILABILITY OF POWER SHALL NOT BE CONSIDERED UNLESS ALL ARRANGEMENTS FOR POWER HAVE BEEN SUBMITTED WITHIN FIFTEEN (15) DAYS AFTER THE PROJECT WORK HAS BEGUN.

LABEL THE SERVICE ENCLOSURES INDICATING SERVICE ADDRESS AS WELL AS ALL REQUIRED INFORMATION AS SHOWN ON THE ELECTRICAL DETAIL (ED) STANDARD SHEETS. LABELING SHALL BE SILK SCREENING OR OTHER ACCEPTABLE METHOD. THIS WORK WILL NOT BE PAID FOR DIRECTLY, BUT IS SUBSIDIARY TO THIS ITEM.

WHEN CONCRETE FOR SERVICE POLE FOUNDATIONS IS REQUIRED, USE CLASS A IN ACCORDANCE WITH ITEM 421, "HYDRAULIC CEMENT CONCRETE", EXCEPT CONSIDER THE CONCRETE SUBSIDIARY TO ITEM 628 FOR PAYMENT PURPOSES. WHEN REINFORCING STEEL FOR SERVICE POLE FOUNDATIONS IS REQUIRED, IT WILL BE IN ACCORDANCE WITH ITEM 440,"REINFORCING STEEL", EXCEPT CONSIDER THE STEEL SUBSIDIARY TO ITEM 628 FOR PAYMENT PURPOSES.

USE ONLY WHITE INSULATED WIRE FOR NEUTRAL WIRE.

ITEM 636: ALUMINUM SIGNS

ALL SIGNS INSTALLED AS PART OF THIS PROJECT SHALL CONFORM TO TXDOT STANDARD ITEM 636.

ITEM 644: SMALL ROADSIDE SIGN SUPPORTS AND ASSEMBLIES

ALL SIGN SUPPORTS AND ASSEMBLIES INSTALLED AS PART OF THIS PROJECT SHALL CONFORM TO TXDOT STANDARD ITEM 644.

ITEM 650: OVERHEAD SIGN SUPPORTS

ALL OVERHEAD SIGN SUPPORTS AND ASSEMBLIES INSTALLED AS PART OF THIS PROJECT SHALL CONFORM TO TXDOT STANDARD ITEM 650.

ITEM 656: FOUNDATIONS FOR TRAFFIC CONTROL DEVICES

FOUNDATIONS FOR TRAFFIC SIGNAL CONTROLLER IS SUBSIDIARY TO ITEMS 680.

LOCATIONS OF FOUNDATIONS SHOWN ON THE PLANS ARE FOR DIAGRAMMATIC PURPOSES ONLY AND MAY BE VARIED TO MEET LOCAL CONDITIONS, SUBJECT TO APPROVAL. STAKE THESE LOCATIONS AND HAVE THEM APPROVED BY THE INSPECTOR BEFORE INSTALLATION OF FOUNDATIONS. THIS WILL ENSURE THAT ALL LUMINAIRES AND MAST ARMS ARE CLEAR OF ALL OVERHEAD LINES AND UNDERGROUND UTILITIES BEFORE DRILLING BEGINS.

THE INSPECTOR, TOGETHER WITH THE CONTRACTOR, WILL CALCULATE THE VERTICAL SIGNAL HEAD CLEARANCE BEFORE PLACING ANY TRAFFIC SIGNAL POLE FOUNDATION.

ITEM 666: REFLECTORIZED PAVEMENT MARKINGS

ALL PAVEMENT MARKINGS SHALL CONFORM TO TXDOT STANDARD ITEM 666.

ITEM 672: RAISED PAVEMENT MARKERS

WHITE ADHESIVE WILL BE USED ON CONCRETE PAVEMENTS. ALL OTHER WORK SHALL CONFORM TO TXDOT STANDARD ITEM 672.

ITEM 677: ELIMINATING EXISTING PAVEMENT MARKINGS AND MARKERS

ALL WORK FOR THE ELIMINATION OF EXISTING PAVEMENT MARKINGS AND MARKERS SHALL CONFORM TO TXDOT STANDARD ITEM 677.

ITEM 678: PAVEMENT SURFACE PREPARATION FOR MARKINGS

ALL WORK FOR THE PREPARATION OF PAVEMENT SURFACES FOR MARKINGS SHALL CONFORM TO TXDOT STANDARD ITEM 678.

ITEM 680: INSTALLATION OF HIGHWAY TRAFFIC SIGNALS

NOTIFY THE CITY OF MIDLAND TRAFFIC ENGINEER AT 432-685-7280 ONE WEEK BEFORE BEGINNING ANY WORK INVOLVING TRAFFIC SIGNALS.

THIS PROJECT SHALL CONSIST OF THE INSTALLATION OF ALL OF THE MATERIALS NECESSARY FOR COMPLETE SIGNAL SYSTEMS AS FOLLOWS:

1. PROVIDE SUBMITTAL LITERATURE FOR ALL TRAFFIC SIGNAL EQUIPMENT BEFORE INSTALLATION. EQUIPMENT WILL NOT BE ACCEPTED FOR DELIVERY OR ANY PAYMENT MADE UNTIL THE EQUIPMENT, MATERIALS LISTS AND SHOP DRAWINGS HAVE BEEN APPROVED BY THE ENGINEER. APPROVAL BY THE ENGINEER DOES NOT RELIEVE THE CONTRACTOR OF HIS RESPONSIBILITIES TO MEET THE REQUIREMENTS OF THE SPECIFICATIONS AND PLANS. ALL SUBMITTAL LITERATURE SHALL BE APPROVED AND VERIFIED FOR ALL THE FURNISHED TRAFFIC SIGNAL EQUIPMENT PRIOR TO ITS INSTALLATION.
2. FURNISH AND INSTALL ALL REQUIRED MATERIALS AND EQUIPMENT NECESSARY FOR THE COMPLETE AND OPERATING TRAFFIC SIGNAL INSTALLATION.
3. ACCOMPLISH THE ERECTION OF POLES AND LUMINAIRES LOCATED NEAR ANY OVERHEAD ELECTRICAL LINES USING ESTABLISHED INDUSTRY AND UTILITY SAFETY PRACTICES. CONSULT WITH THE APPROPRIATE UTILITY COMPANY BEFORE BEGINNING SUCH WORK.
4. THE LOCATIONS SHOWN ON THE PLANS FOR CONTROLLER FOUNDATIONS, CONDUIT AND OTHER ITEMS MAY BE ADJUSTED TO BETTER FIT FIELD CONDITIONS AS APPROVED, DUE TO CONFLICTS WITH UTILITIES.
5. USE A VULCAN SWINGER SIGN MOUNTING BRACKET OR EQUIVALENT FOR ALL SIGNS MOUNTED ON SPAN WIRES.
6. PROVIDE VIBRATION DAMPERS FOR MAST ARMS 28 FEET LONG AND LONGER. USE DAMPERS 18"X48" FOR ARMS UP TO 48 FEET LONG, AND 16"X66" FOR LONGER MAST ARMS. INSTALL USING ASTRO-BRAC, SIGNFIX ALUMINUM CHANNEL, OR EQUAL, AT A MAXIMUM OF 3 FEET FROM THE END OF THE MAST ARM.
7. PROVIDE A QUALIFIED TECHNICIAN ON THE PROJECT SITE TO PLACE THE TRAFFIC SIGNALS IN FULL OPERATION.
8. INSTALL THE CITY OF MIDLAND SUPPLIED BATTERY BACK-UP SYSTEM, CONTROLLER AND CABINET ASSEMBLY.

CITY OF MIDLAND CONTROLLER		
1	PROVIDED BY CITY OF MIDLAND	SIGNAL CONTROLLER
1	PROVIDED BY CITY OF MIDLAND	NEMA TS2 TYPE 2 CABINET
1	PROVIDED BY CITY OF MIDLAND	CONFLICT MONITOR

CONTACT THE CITY OF MIDLAND SIGNAL SHOP SUPERVISOR AT (432) 685-7928 TO COORDINATE A PICK UP TIME.

9. THE CITY OF MIDLAND WILL NOT ASSUME RESPONSIBILITY FOR THE MAINTENANCE OF THE TRAFFIC SIGNALS UNTIL THE PROJECT IS COMPLETED AND ACCEPTED.

10. WIRE THE SIGNAL INSTALLATION TO OPERATE IN ACCORDANCE WITH PHASE DIAGRAMS IN THESE PLANS. TIMING AND PHASING WILL BE CHANGED AND MAINTAINED BY THE CITY OF MIDLAND TRAFFIC ENGINEERING GROUP. A COPY OF ALL REVISIONS TO THE ORIGINAL TIMING AND PHASING PLANS WILL BE DELIVERED TO THE CITY OF MIDLAND TRAFFIC ENGINEERING GROUP AND ONE COPY IS TO STAY IN THE CONTROLLER CABINET AT THE COMPLETION OF THE PROJECT.

11. PLACE THE TRAFFIC SIGNAL INTO OPERATION ONLY AFTER ALL REQUIRED STRIPING IS COMPLETE AND ALL CONFLICTING SIGNING IS REMOVED.

12. PROJECT INSPECTION: FOR ELECTRICAL PROJECT INSPECTION, CONTACT THE CITY OF MIDLAND SIGNAL SHOP IN ADVANCE OF NEEDED INSPECTIONS. AT THE TIME OF THE FINAL ELECTRICAL INSPECTION, THE CITY OF MIDLAND WILL CREATE A PUNCH LIST OF DISCREPANCIES TO BE CORRECTED BEFORE SIGNAL IS PUT INTO FLASH MODE.

13. SIGNAL TURN-ON: NOTIFY THE CITY OF MIDLAND SIGNAL SHOP SUPERVISOR APPROXIMATELY 48 HOURS IN ADVANCE OF THE SIGNAL TURN ON. SIGNAL TECHNICIANS FROM THE CITY OF MIDLAND MUST BE PRESENT WHEN THE SIGNALS ARE PLACED IN FULL OPERATION. UNLESS OTHERWISE DIRECTED, PLACE THE SIGNAL IN FULL OPERATION BETWEEN 9:00 A.M. - 12:00 (NOON) ON MONDAYS, TUESDAYS, OR WEDNESDAYS ONLY.

14. TEST PERIOD FOR SIGNALS: THE SIGNALS SHALL OPERATE CONTINUOUSLY FOR A MINIMUM OF 30 CALENDAR DAYS IN A SATISFACTORY MANNER. EQUIPMENT FAILURES DURING THESE 30 DAYS WILL CAUSE THE TEST PERIOD TO START OVER.

15. DURING THE THIRTY-DAY TEST PERIOD, THE CITY OF MIDLAND SIGNAL SHOP WILL BE THE FIRST RESPONDERS TO ALL TROUBLE CALLS. THEY WILL, IN TURN CONTACT THE CONTRACTOR. PROVIDE QUALIFIED PERSONNEL TO RESPOND TO THESE AND ALL TROUBLE CALLS. REPAIR AND DIAGNOSE ANY MALFUNCTIONS TO SIGNAL EQUIPMENT SUPPLIED FOR THE PROJECT. PROVIDE A TELEPHONE NUMBER, NOT SUBJECT TO FREQUENT CHANGES AND AVAILABLE TO RECEIVE CALLS ON A 24-HOUR BASIS. RESPOND TO REPORTED CALLS WITHIN A REASONABLE TRAVEL TIME, (I.E. FROM A MIDLAND ADDRESS), BUT NOT MORE THAN 2 HOURS MAXIMUM. MAKE APPROPRIATE REPAIRS WITHIN 24 HOURS. PLACE A LOGBOOK IN THE CONTROLLER CABINET AND KEEP A RECORD OF EACH TROUBLE CALL REPORTED. NOTIFY THE ENGINEER OF EACH TROUBLE CALL. THE ERROR LOG IN THE CONFLICT MONITOR SHALL NOT BE CLEARED DURING THE THIRTY-DAY TEST PERIOD WITHOUT APPROVAL. IF IT IS NECESSARY TO REPLACE EQUIPMENT, SUCH AS A CONTROLLER, IN ORDER TO RETURN THE SIGNALS TO NORMAL OPERATION, THE CITY OF MIDLAND WILL REPLACE THE EQUIPMENT WITH LOANED EQUIPMENT UNTIL THE ORIGINAL EQUIPMENT IS REPAIRED AND THEN REPLACED.

ITEM 682: VEHICLE AND PEDESTRIAN SIGNAL HEADS

PROVIDE ALL SIGNAL HEADS FROM THE SAME MANUFACTURER.

PROVIDE ALL LED TRAFFIC SIGNAL LAMP UNITS, AS WELL AS THE VARIOUS COMPONENTS OF THE SIGNAL HEADS TO BE INSTALLED WITHIN THIS PROJECT.

TRAFFIC SIGNAL HEADS SHALL BE YELLOW POLYCARBONATE. SIGNAL HEADS MOUNTED ON POLES AND MAST ARMS SHALL BE LEVEL AND PLUMB AND AIMED AS DIRECTED. COVER ALL SIGNAL FACES UNTIL PLACED IN OPERATION.

FOR ALL PROPOSED MAST ARM POLE ASSEMBLIES, PROVIDE MOUNTING BRACKET ASSEMBLY AS DESCRIBED ON THE STATE STANDARD SHEETS "SINGLE MAST ARM ASSEMBLIES."

ITEM 684: TRAFFIC SIGNAL CABLES

INCLUDE EXTRA CABLE LENGTH IN EACH RUN TO PROVIDE ADEQUATE SLACK, AT EACH GROUND BOX, FOUNDATION AND SIGNAL HEAD. IDENTIFY EACH CABLE AS SHOWN ON THE PLANS (CABLE 1, ETC.) WITH PRE-NUMBERED IDENTIFICATION TAGS OF PLASTIC, TAPE OR MARKING LABELS AT EACH SIGNAL HEAD, GROUND BOX, TERMINAL BLOCK, POLE BASE AND CONTROLLER.

ALL CABLES SHALL BE CONTINUOUS WITHOUT SPLICES FROM TERMINAL POINT TO TERMINAL POINT OR AS DIRECTED OR APPROVED. ALL PROPOSED SIGNAL CABLE AND NUMBER OF CONDUCTORS REQUIRED SHALL BE AS SHOWN ON THE PLANS. TERMINATE ALL ELECTRICAL CONDUCTORS FROM THE CONTROLLER AT THE TERMINATION BLOCK IN THE SIGNAL POLE HAND HOLE WHETHER IN USE OR NOT.

PROVIDE AN EXTRA 10' FOR EACH CABLE TERMINATING IN THE CONTROLLER CABINET. ALL CABLES SHALL BE CONTINUOUS WITHOUT SPLICES FROM TERMINAL POINT TO TERMINAL POINT. PROVIDE STRANDED 14 AWG TYPE A SIGNAL CABLES. PROVIDE 12 AWG TYPE C SIGNAL CABLES FOR ACCESSIBLE PEDESTRIAN SIGNAL UNITS. PROVIDE THE NUMBER OF CONDUCTORS AS SHOWN ON THE PLANS.

ITEM 687: PEDESTAL POLE ASSEMBLIES

ITEM 687 SHALL BE IN ACCORDANCE WITH TXDOT STANDARD SPECIFICATION.

ITEM 688: PEDESTRIAN DETECTORS AND VEHICLE LOOP DETECTORS

AT INTERSECTIONS WHERE A MINIMUM OF 10 FT. SPACING BETWEEN ADJACENT ACCESSIBLE PEDESTRIAN SIGNAL UNITS IS NOT POSSIBLE, EACH ACCESSIBLE PEDESTRIAN PUSHBUTTON MUST BE PROVIDED WITH THE FOLLOWING FEATURES:

- A PUSHBUTTON LOCATOR TONE,
- A TACTILE ARROW,
- A SPEECH WALK MESSAGE FOR THE WALKING PERSON INDICATION AND
- A SPEECH PUSHBUTTON INFORMATION MESSAGE.

PACKET 5.89 July 11, 2023

Freese and Nichols, Inc.
Texas Registered Engineering Firm F-2144

11-22-19

FREESE NICHOLS
2711 North Haskell Ave, Suite 3300
Dallas, Texas 75204
Phone: 214-217-2200
Web: www.freese.com

CITY OF MIDLAND, TX
AVALON DR AT DEAUVILLE BLVD
CIVIL
GENERAL NOTES

NO.	ISSUE	BY	DATE

F&N JOB NO. M0019336
DATE 11/2019
DESIGNED
DRAWN
REVISED
CHECKED
FILE NAME CV-SUMM- GENERAL NOTES.dwg

VERIFY SCALE Bar is one inch on original drawing. If not one inch on this sheet, adjust scale.
0 1"

SHEET
SEQ. 3

ACAD Rel: 21.0s (LMS Tech)
Plotted: 11/18/2019 5:17 PM
Last Saved: 11/13/2019 11:30 AM
Saved By: 02480
N:\IF\Drawings\1. General\CV-SUMM- GENERAL NOTES.dwg

Plot Date: 11/18/2019 5:17 PM Plot By: 02480 Filename: N:\IF\Drawings\1. General\CV-SUMM- GENERAL NOTES.dwg

GENERAL NOTES:

TRAFFIC SIGNAL INSTALLATION

ITEM 686: TRAFFIC SIGNAL POLE ASSEMBLIES (STEEL)

PROVIDE ALL SIGNAL POLES FROM THE SAME MANUFACTURER.

USE MATERIALS FROM THE PREQUALIFIED MATERIAL PRODUCER LISTS AS SHOWN ON THE TEXAS DEPARTMENT OF TRANSPORTATION (TXDOT) - CONSTRUCTION DIVISION'S (CST) MATERIAL PRODUCER LIST. CATEGORY IS "ROADWAY ILLUMINATION AND ELECTRICAL SUPPLIES."

MARK POLE SHAFTS AND MAST ARMS WITH THE IDENTIFICATION NUMBERS FROM THE PLANS TO FACILITATE FIELD-ASSEMBLY. IDENTIFY POLE SHAFTS AND MAST ARMS BY INTERSECTION FOR PROJECTS WITH MULTIPLE INTERSECTIONS.

PROVIDE NUTS ON TOP AND BOTTOM (DOUBLE NUTS) OF THE BASE PLATE AS SHOWN ON THE PLANS.

SET ANCHOR BOLTS FOR MAST ARM SIGNAL POLES AND STRAIN POLES SO THAT TWO ARE IN TENSION AND TWO ARE IN COMPRESSION. OBTAIN APPROVAL OF ANCHOR BOLT PLACEMENT BEFORE PLACING CONCRETE.

USE THE TRAFFIC SIGNAL POLE HEIGHTS AND MAST ARM LENGTHS SHOWN ON THE PLANS AND IN THE MATERIAL SUMMARY FOR BIDDING PURPOSES ONLY. MAKE FIELD MEASUREMENTS TO DETERMINE THE ACTUAL POLE HEIGHT AND MAST ARM LENGTH REQUIRED. PROVIDE VERTICAL CLEARANCE OF 17 TO 19 FEET FROM THE ROADWAY TO THE LOWEST POINT OF THE SIGNAL HEAD OR MAST ARM. PLACE SIGNAL HEADS 40 FEET MINIMUM AND 180 FEET MAXIMUM FROM THE STOP LINE. IF THE NEAREST SIGNAL IS MORE THAN 180 FEET FROM THE STOP LINE, PLACE A SUPPLEMENTAL NEAR-SIDE SIGNAL HEAD. DETERMINE THE FIELD MEASUREMENTS AND ELEVATIONS FROM THE ACTUAL FIELD LOCATION OF THE POLES, CONSIDERING ALL ABOVE AND BELOW GROUND UTILITIES AND EXISTING ROADWAY ELEVATIONS.

PROVIDE VIBRATION DAMPERS FOR MAST ARMS 28 FEET LONG AND LONGER. USE DAMPERS 18"X48" FOR ARMS UP TO 48 FEET LONG, AND 16"X66" FOR LONGER MAST ARMS. INSTALL USING ASTRO-SIGN BRAC, SIGNFIX ALUMINUM CHANNEL, OR EQUAL, AT A MAXIMUM OF 3 FEET FROM THE END OF THE MAST ARM.

6025: RADAR PRESENCE DETECTION SYSTEM

THE CONTRACTOR SHALL FURNISH AND INSTALL THE WAVETRONIX™ RADAR DETECTION SYSTEM. THE CONTRACTOR SHALL INSTALL, AIM AND PROGRAM ALL DETECTORS (INCLUDING DETECTOR CABLE) AS SHOWN ON THE PLANS PER CITY DETAIL. THE CONTRACTOR SHALL REFER TO PLANS FOR RADAR DETECTION ZONES PLACEMENT. THE CONTRACTOR SHALL HAVE PREVIOUSLY COMPLETED INSTALLATION TRAINING PROVIDED BY THE RADAR DETECTION SYSTEM MANUFACTURER OR MAKE ARRANGEMENTS FOR THE MANUFACTURER TO INSTALL AND CALIBRATE THE SYSTEM.

A 4 CHANNEL BACK PLATE IS REQUIRED FOR PRESENCE DETECTION (RPDD).

6057: RADAR ADVANCED DETECTION SYSTEM

IF ADVANCED DETECTION (RADD) IS USED, A 6 CHANNEL BACK PLATE SHALL BE USED. ADVANCE DETECTION IS TO BE USED ON ROADWAYS WITH APPROACH SPEEDS OF 40 MPH OR GREATER.

ITEM 6058: BATTERY BACK-UP SYSTEM FOR SIGNAL CABINETS

THE BATTERY BACK-UP WILL BE INSTALLED WITH THE CONTROLLER ON THE CONCRETE PAD PAID FOR UNDER ITEM 680. IF A LARGER PAD IS NEEDED TO ACCOMMODATE THE BATTERY BACK-UP, THE ADDITIONAL LABOR AND MATERIAL WILL BE SUBSIDIARY TO THIS ITEM.

ITEM 6525: EMERGENCY VEHICLE TRAFFIC SIGNAL PRIORITY CONTROL SYSTEM

ITEM 6525 SHALL BE IN ACCORDANCE WITH TXDOT STANDARD SPECIFICATION.

8260: LED PEDESTRIAN SIGNAL MODULE

FURNISH AND INSTALL IN ALUMINUM HOUSING, LED "WALKING PERSON," AND "HAND" ICON PEDESTRIAN SIGNAL MODULES WITH COUNTDOWN FEATURE.

HOUSING FOR LED PEDESTRIAN SIGNAL MODULE SHALL BE PAID FOR UNDER ITEM 682 "VEHICLE AND PEDESTRIAN SIGNAL HEADS."

Freese and Nichols, Inc.
Texas Registered Engineering Firm F-2144

11-22-19

FREESE NICHOLS
2711 North Haskell Ave, Suite 3300
Dallas, Texas 75204
Phone: 214.217.2200
Web: www.freese.com

CITY OF MIDLAND, TX

AVALON DR AT DEAUVILLE BLVD

CIVIL

GENERAL NOTES

NO.	ISSUE	BY	DATE

F&N JOB NO. M0019336
DATE 11/2019
DESIGNED
DRAWN
REVISED
CHECKED
FILE NAME CV-SUMM- GENERAL NOTES.dwg

VERIFY SCALE Bar is one inch on original drawing. If not one inch on this sheet, adjust scale.
0 1"

SHEET

SEQ. 4

ACAD Rel: 21.0s (LMS Tech)
Xrefnames: N:\IF\Drawings\1. General\CV-SUMM- GENERAL NOTES.dwg
Last Saved: 11/13/2019 11:30 AM Saved By: 02480

Plot Date: 11/18/2019 5:17 PM Plot By: 02480 Filename: N:\IF\Drawings\1. General\CV-SUMM- GENERAL NOTES.dwg

SUMMARY OF TRAFFIC SIGNAL ITEMS

LOCATION	416 6032	618 6023	618 6029	618 6030	618 6033	620 6009	620 6010	621 6007	624 6010	628 6145	680 6002	682 6001	682 6002	682 6003	682 6004	682 6005
	DRILL SHAFT (TRF SIG POLE) (36 IN)	CONDT (PVC) (SCH 40) (2")	CONDT (PVC) (SCH 40) (3")	CONDT (PVC) (SCH 40) (3") (BORE)	CONDT (PVC) (SCH 40) (4")	ELEC CONDR (NO.6) BARE	ELEC CONDR (NO.6) INSULATED	TRAY CABLE (4 CONDR) (8 AWG)	GROUND BOX TY D (162922)W/APRON	ELC SRV TY D 120/240 060(NS)SS(E)SP(O)	INSTALL HWY TRF SIG (ISOLATED)	VEH SIG SEC (12")LED(GRN)	VEH SIG SEC (12")LED(GRN ARW)	VEH SIG SEC (12")LED(YEL)	VEH SIG SEC (12")LED(YEL ARW)	VEH SIG SEC (12")LED(RED)
	LF	LF	LF	LF	LF	LF	LF	LF	EA	EA	EA	EA	EA	EA	EA	EA
AVALON AT DEAUVILLE	56	29	68	439	15	530	16	464	4	1	1	12	4	12	8	12
PROJECT TOTALS	**56**	**29**	**68**	**439**	**15**	**530**	**16**	**464**	**4**	**1**	**1**	**12**	**4**	**12**	**8**	**12**

682 6006	682 6018	684 6036	684 6046	684 6079	686 6046	686 6052	687 6001	688 6001	688 6003	6025 6001	6025 6002	6054 6005
VEH SIG SEC (12")LED(RED ARW)	PED SIG SEC (LED)(COUNTDOWN)	TRF SIG CBL (TY A)(14 AWG)(10 CONDR)	TRF SIG CBL (TY A)(14 AWG)(20 CONDR)	TRF SIG CBL (TY C)(12 AWG)(2 CONDR)	INS TRF SIG PL AM(S)1 ARM(44')ILSN	INS TRF SIG PL AM(S)1 ARM(48')LUM&ILSN	PED POLE ASSEMBLY	PED DETECT PUSH BUTTON (APS)	PED DETECTOR CONTROLLER UNIT	RADAR PRESENCE DETECTOR	RADAR PRESENCE DETECTOR COMM CABLE	ANTENNA (UNI-DIRECTIONAL)
EA	EA	LF	LF	LF	EA	EA	EA	EA	EA	EA	LF	EA
8	8	134	557	1338	1	3	1	8	1	4	557	1
8	**8**	**134**	**557**	**1338**	**1**	**3**	**1**	**8**	**1**	**4**	**557**	**1**

SUMMARY OF PAVEMENT MARKING ITEMS

LOCATION	666 6003	666 6036	666 6042	666 6048	666 6053	666 6120	666 6126	672 6007	677 6001	678 6001	678 6004	678 6006	678 6008
	REFL PAV MRK TY I (W)4"(BRK)(100MIL)	REFL PAV MRK TY I (W)8"(SLD)(100MIL)	REFL PAV MRK TY I (W)12"(SLD)(100MIL)	REFL PAV MRK TY I (W)24"(SLD)(100MIL)	REFL PAV MRK TY I (W)(ARROW)(090MIL)	REFL PAV MRK TY I (Y)4"(BRK)(100MIL)	REFL PAV MRK TY I (Y)4"(SLD)(100MIL)	REFL PAV MRKR TY I-C	ELIM EXT PAV MRK & MRKS (4")	PAV SURF PREP FOR MRK (4")	PAV SURF PREP FOR MRK (8")	PAV SURF PREP FOR MRK (12")	PAV SURF PREP FOR MRK (24")
	LF	LF	LF	LF	EA	LF	LF	EA	LF	LF	LF	LF	LF
AVALON AT DEAUVILLE	360	300	465	330	3	100	1000	55	810	2160	300	465	330
PROJECT TOTALS	**360**	**300**	**465**	**330**	**3**	**100**	**1000**	**55**	**810**	**2160**	**300**	**465**	**330**

SUMMARY OF ROADWAY ITEMS

LOCATION	531 6001	531 6004
	CONC SIDEWALKS (4")	CURB RAMPS (TY 1)
	SY	EA
AVALON AT DEAUVILLE	12	4
PROJECT TOTALS	12	4

Freese and Nichols, Inc.
Texas Registered Engineering Firm F-2144

11-22-19

FREESE NICHOLS
2711 North Haskell Ave, Suite 3300
Dallas, Texas 75204
(214) 217-2200
Web — www.freese.com

CITY OF MIDLAND, TX

AVALON DR AT DEAUVILLE BLVD

CIVIL

QUANTITY SUMMARY

F&N JOB NO. MOD19336
DATE 11/2019
DESIGNED
DRAWN
REVISED
CHECKED
FILE NAME CV-SUMM-QTY.dwg

NO. | ISSUE | BY | DATE

VERIFY SCALE Bar is one inch on original drawing. If not one inch on this sheet, adjust scale.
0 1"

SHEET

SEQ. 5

ACAD Rel: 21.0s (LMS Tech)
XRefs: N:\F\Drawings\8. Traffic\CV-SUMM-QTY.dwg
Last Saved: 11/18/2019 5:34 PM Saved By: 02480

Plot Date: 11/18/2019 5:43 PM Plot By: 02480 Filename: N:\F\Drawings\8. Traffic\CV-SUMM-QTY.dwg

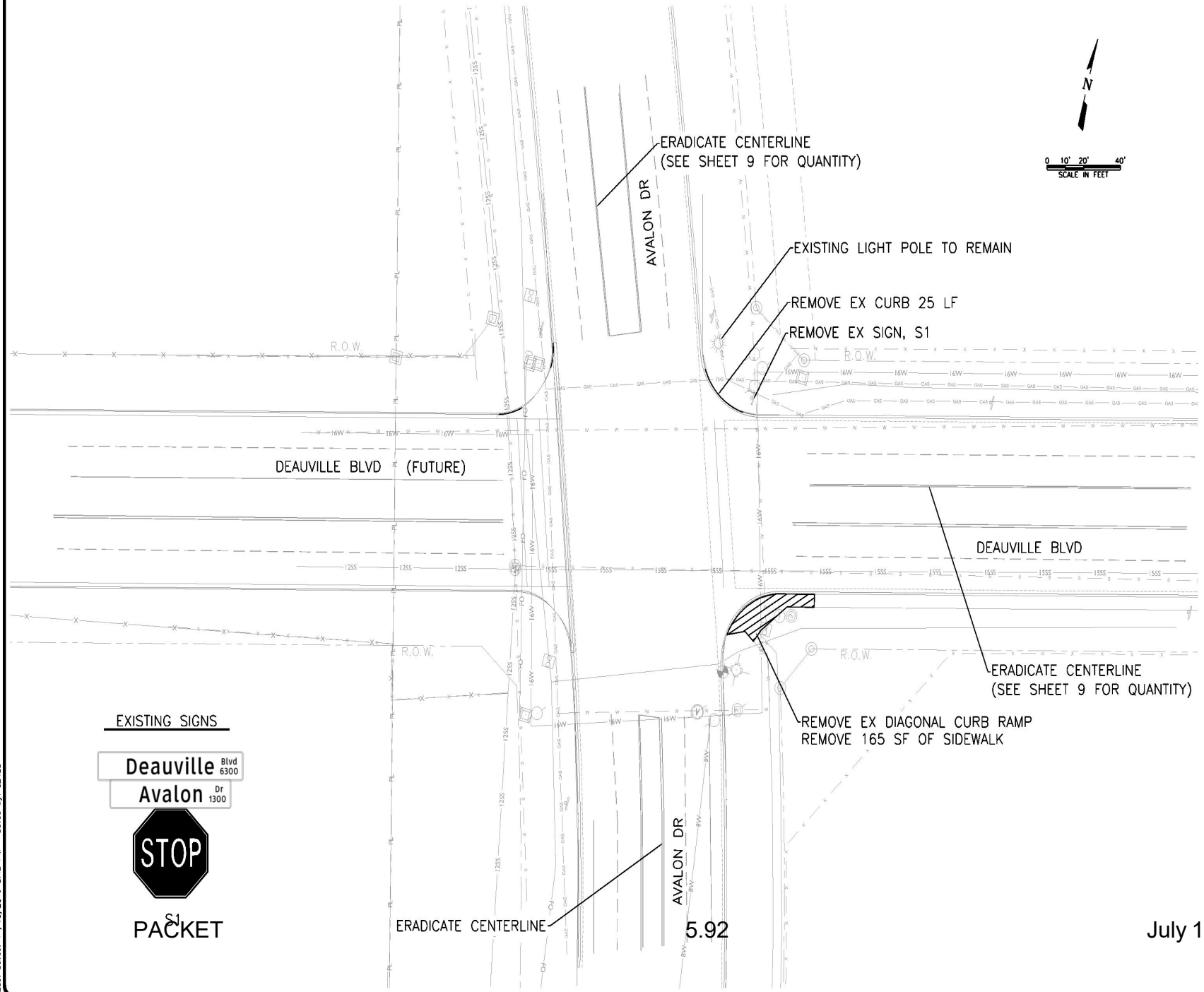

Freese and Nichols, Inc.
Texas Registered Engineering Firm F-2144

11-22-19

FREESE NICHOLS
2711 North Haskell Ave., Suite 3300
Dallas, Texas 75204
Phone 214.217.2200
Web — www.freese.com

CITY OF MIDLAND, TX
AVALON DR AT DEAUVILLE BLVD
CIVIL
EXISTING CONDITIONS

NO.	ISSUE	BY	DATE

F&N JOB NO. M0019336
DATE 11/2019
DESIGNED
DRAWN
CHECKED
FILE NAME CV-TRT-PL-DEAUVILLEATAVALON-removal.dwg

VERIFY SCALE Bar is one inch on original drawing. If not one inch on this sheet, adjust scale.

SHEET
SEQ. 6

ACAD Rel: 21.0s (LMS Tech)
File Name: N:\IF\Drawings\8. Traffic\CV-TRT-PL-DEAUVILLEATAVALON-removal.dwg
Last Saved: 11/13/2019 2:12 PM Saved By: 02480

Plot Date: 11/18/2019 5:18 PM Plot By: 02480 Filename: N:\IF\Drawings\8. Traffic\CV-TRT-PL-DEAUVILLEATAVALON-removal.dwg

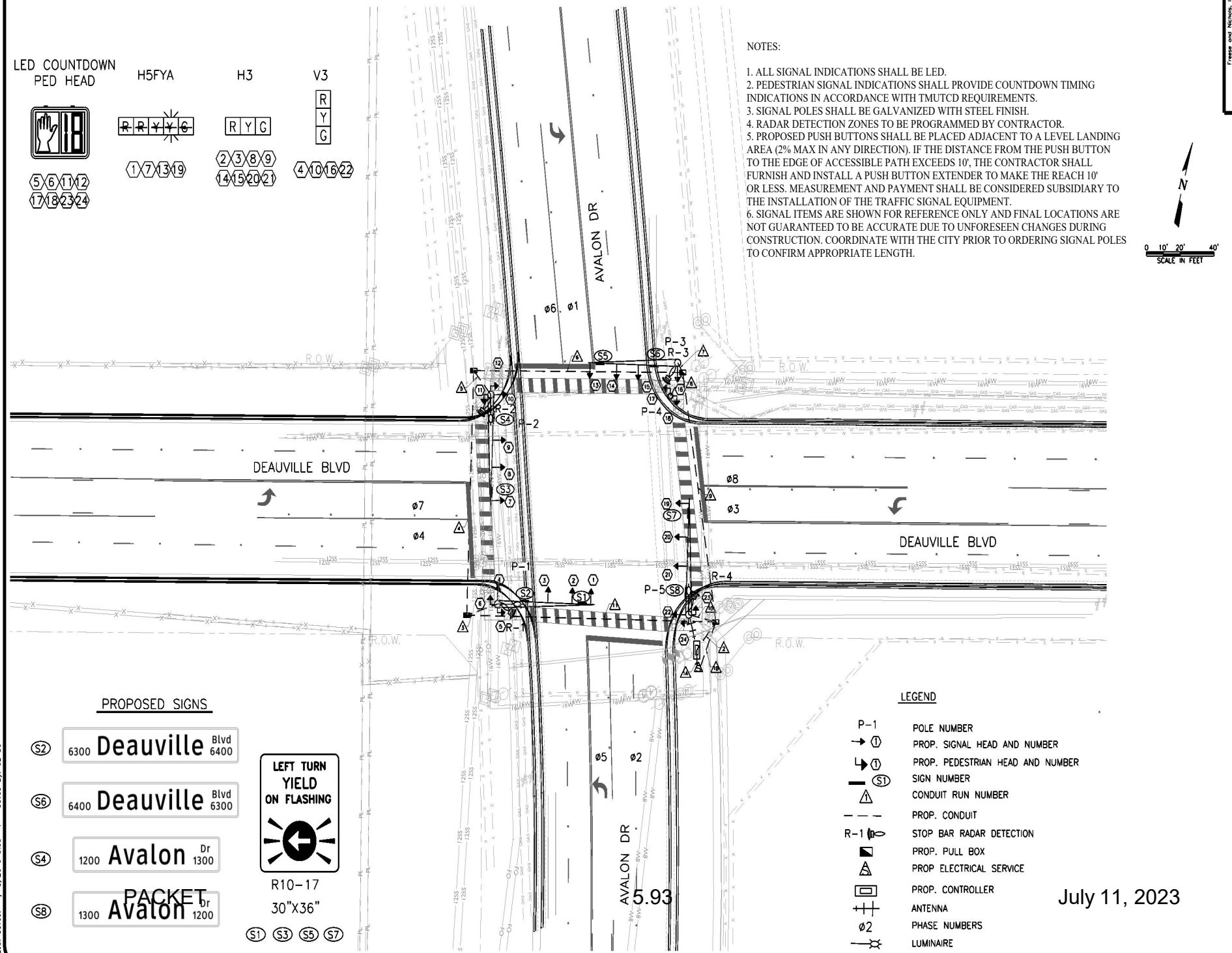

Freese and Nichols, Inc.
Texas Registered Engineering Firm F-2144

11-22-19

FREESE NICHOLS
2711 North Haskell Ave. Suite 3300
Dallas, Texas 75204
Phone: 214-217-2200
Web: www.freese.com

CITY OF MIDLAND, TX
AVALON DR AT DEAUVILLE BLVD
CIVIL
TRAFFIC SIGNAL LAYOUT

F&N JOB NO. MD019336
DATE 11/2019
DESIGNED
DRAWN
CHECKED
FILE NAME CV-TRF-PL-DEAUVILLEATAVALON-propromps-layout.dwg

NO. ISSUE BY DATE

VERIFY SCALE Bar is one inch on original drawing. If not one inch on this sheet, adjust scale.

SHEET
SEQ. 7

5.93

July 11, 2023

PACKET

ACAD Rel: 21.0s (LMS Tech)
File name: N:\IF\Drawings\8. Traffic\CV-TRF-PL-DEAUVILLEATAVALON-propromps-layout.dwg
Last Saved: 11/18/2019 3:09 PM Saved By: 02480

Plot Date: 11/18/2019 5:19 PM Plot By: 02480 Filename: N:\IF\Drawings\8. Traffic\CV-TRF-PL-DEAUVILLEATAVALON-propromps-layout.dwg

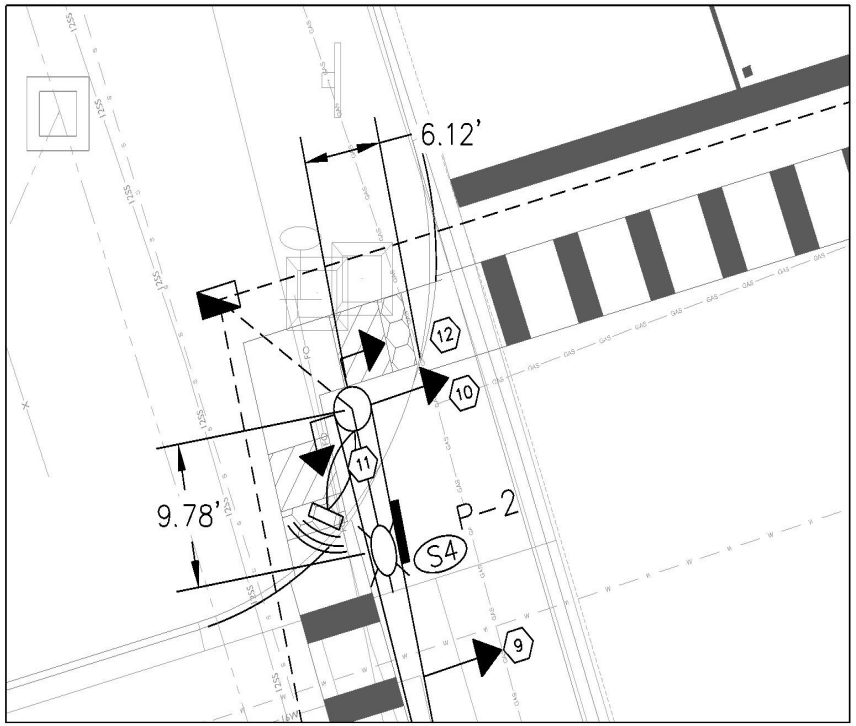

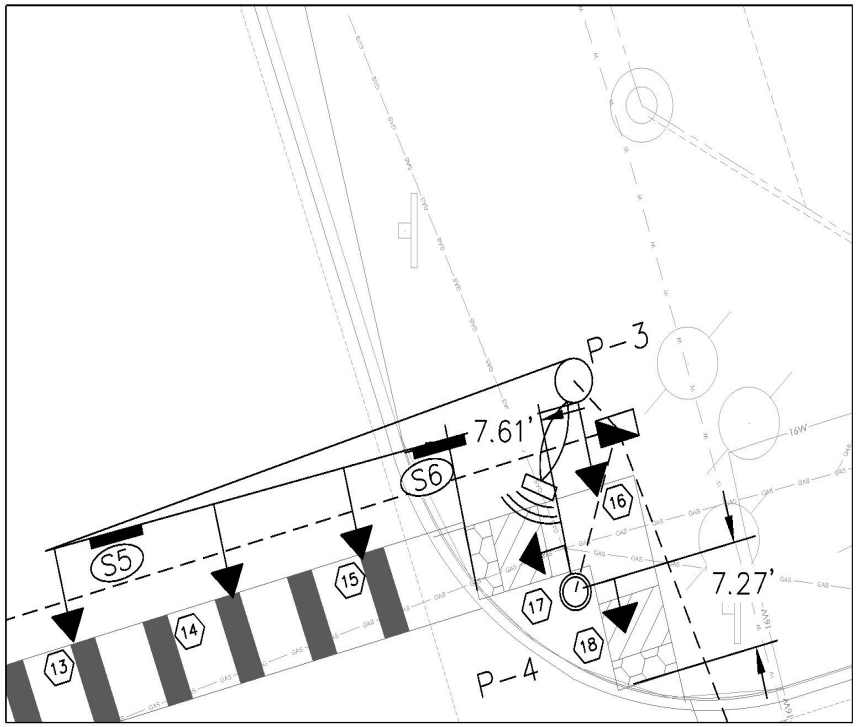

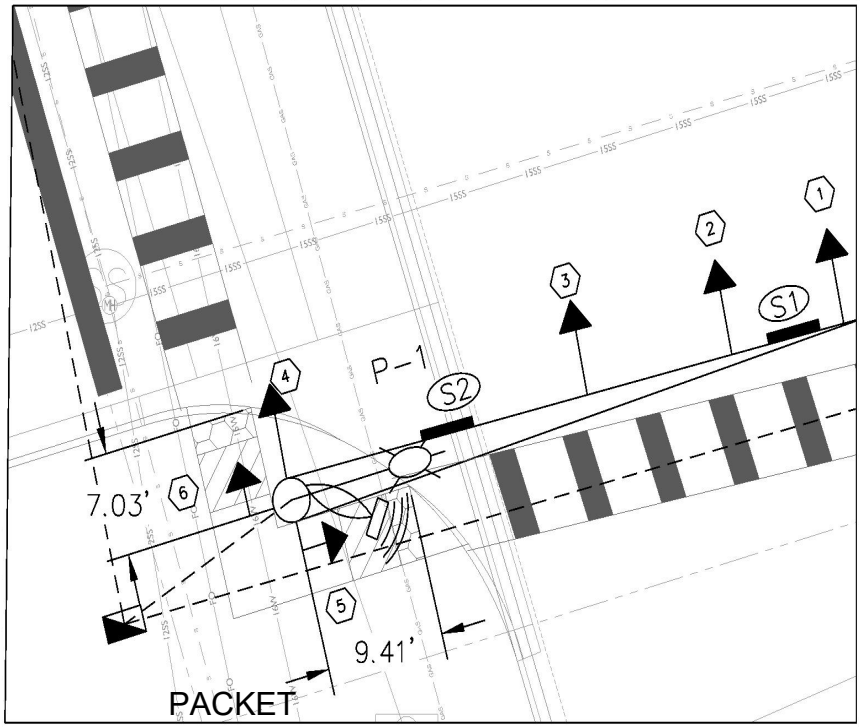

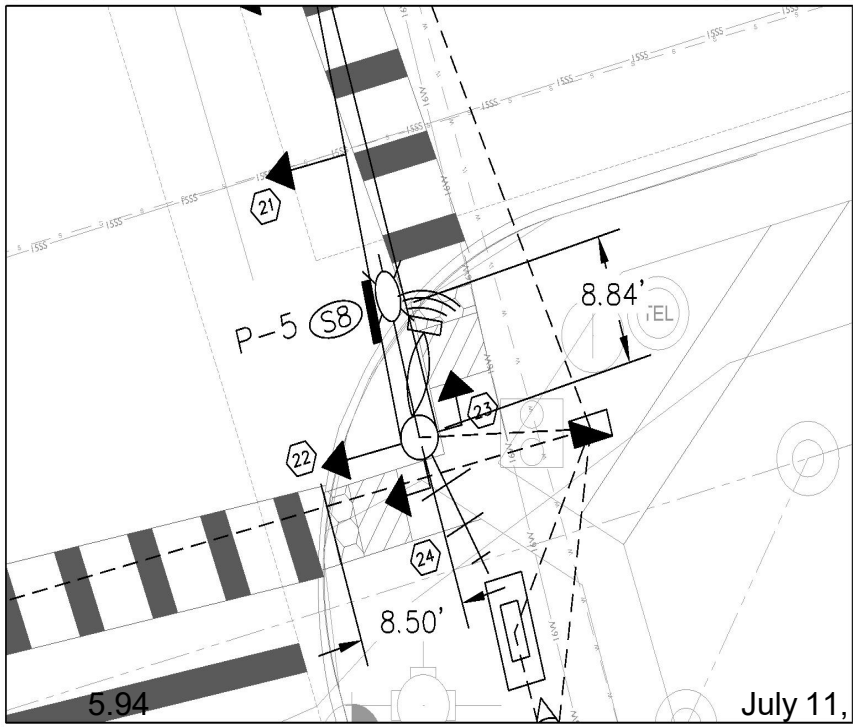

N

0 5' 10'
SCALE IN FEET

Freese and Nichols, Inc.
Texas Registered Engineering Firm F-2144

11-22-19

FREESE NICHOLS
2711 North Haskell Ave, Suite 3300
Dallas, Texas 75204
Phone: 214-217-2200
Web: www.freese.com

CITY OF MIDLAND, TX

AVALON DR AT DEAUVILLE BLVD

CIVIL

CORNER DETAILS

NO.	ISSUE	BY	DATE

F&N JOB NO. MD019336
DATE 11/2019
DESIGNED
DRAWN
REVISED
CHECKED
FILE NAME CV-TRT-PL-DEAUVILLEATAVALON-propramps - ramps10.dwg

VERIFY SCALE Bar is one inch on original drawing. If not one inch on this sheet, adjust scale.

SHEET

SEQ. 8

PACKET 5.94 July 11, 2023

ACAD Rel: 21.0s (LMS Tech)
File Name: N:\IF\Drawings\8. Traffic\CV-TRT-PL-DEAUVILLEATAVALON-propramps - ramps10.dwg
Last Saved: 10/11/2019 10:57 AM Saved By: 02854

Plot Date: 11/18/2019 5:20 PM Plot By: 02480 Filename: N:\IF\Drawings\8. Traffic\CV-TRT-PL-DEAUVILLEATAVALON-propramps - ramps10.dwg

SIGNAL POLE CHART

POLE NUMBER	P-1						P-2						P-3				P-4		P-5					
MAST ARM LENGTH	48'						48'						44'				NA		48'					
FOUNDATION TYPE	36-A						36-A						36-A				24-A		36-A					
WITH LUMINAIRES	YES						YES						NO				N/A		YES					
SIZE OF LENS	12"						12"						12"				12"		12"					
SIGNAL TYPE	H5FYA	H3	H3	V3	P	P	H5FYA	H3	H3	V3	P	P	H5FYA	H3	H3	V3	P	P	H5FYA	H3	H3	V3	P	P
SIGNAL FACE NO.	1	2	3	4	5	6	7	8	9	10	11	12	13	14	15	16	17	18	19	20	21	22	23	24
12" LED SIGNAL INDICATIONS	←R	R	R	R	DW	DW	←R	R	R	R	DW	DW	←R	R	R	R	DW	DW	←R	R	R	R	DW	DW
	←R	Y	Y	Y	W	W	←R	Y	Y	Y	W	W	←R	Y	Y	Y	W	W	←R	Y	Y	Y	W	W
	←Y	G	G	G			←Y	G	G	G			←Y	G	G	G			←Y	G	G	G		
	←FY						←FY						←FY						←FY					
	←G						←G						←G						←G					

LED SIGNAL HEAD DETAILS

SIG HEAD NO.	SIG HEAD TYPE	VEH SIG SECTION	PED SIG SECTION
		EA	EA
1	H5FYA	5	
2	H3	3	
3	H3	3	
4	V3	3	
5	143C		1
6	143C		1
7	H5FYA	5	
8	H3	3	
9	H3	3	
10	V3	3	
11	143C		1
12	143C		1
13	H5FYA	5	
14	H3	3	
15	H3	3	
16	V3	3	
17	143C		1
18	143C		1
19	H5FYA	5	
20	H3	3	
21	H3	3	
22	V3	3	
23	143C		1
24	143C		1
TOTAL (EA)		56	8

ELECTRICAL SERVICE DETAILS

ELECTRICAL SERVICE NO.	SHEET NO.	ELECTRICAL SERVICE DESCRIPTION (SEE ED(4) AND ED(5)-03	SERVICE CONDUIT SIZE (RMC)	SERVICE CONDUCTORS NO./SIZE	SAFETY SWITCH AMPS	MAINCIRCUIT BREAKER POLE/AMP	TWO-POLE CONTACTOR AMPS	PANELBD./ LOADCENTER AMP RATING	CIRCUIT NO.	BRANCH CIRCUIT BREAKER POLE/AMPS	KVA LOAD
1	-	ELEC SERV TY D(120/240)060(NS)AL(E)AP(O)	1-1/2"	3/#6	N/A	2P/60	N/A	70	A B	1P/50 2P/20	5.8

CONDUIT RUN SUMMARY

RUN NO.	RUN LENGTH					ELECTRICAL CONDUCTORS		ILLUMINATION	APS CABLE (TY-C, 12 AWG)	SIGNAL CABLE (TY-A, 14 AWG)		STOPLINE DETECTION
		2" PVC TRENCH (LF)	3" PVC TRENCH (LF)	3" PVC BORE (LF)	4" PVC TRENCH (LF)	NO. 6 BARE (EA)	NO.6 XHHW (EA)	TRAY CABLE 4 CNDR NO. 12 (EA)	2 CNDR CABLE	10 CNDR CABLE (EA)	20 CNDR CABLE (EA)	WAVETRONIX CABLE
1A	8	1				1	2					
1B	21	1				1		3				
2	15				1	1			8	1	4	4
3	18		1			1		1	2		1	1
4	103			1		1		1				
5	15		1			1		1	2		1	1
6	105			1		1			2		1	1
7	7		1			1					1	1
8	13		1			1			2	1		
9	106			1		1			6	1	2	2
10	15		1			1		1	2		1	1
11	125			1		1		2	2		1	1
TOTAL (LF)		29	68	439	15	551	16	464	1338	134	557	557

NOTE: THIS CHART DOES NOT REFLECT THE QUANTITIES OF CABLES INSIDE THE POLE.

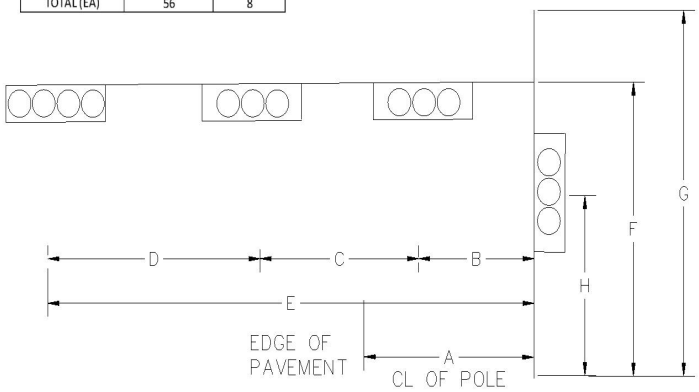

LED LAMP DETAILS

POLE	RED	YELLOW	GREEN	RED ARROW	YELLOW ARROW	GREEN ARROW	LED PED SIG LAMP
P-1	3	3	3	2	2	1	2
P-2	3	3	3	2	2	1	2
P-3	3	3	3	2	2	1	
P-4							2
P-5	3	3	3	2	2	1	2
TOTAL	12	12	12	8	8	4	8

GROUND BOX QUANTITIES

TYPE D W/APRON	4

TRAFFIC SIGNAL POLE ASSEMBLIES

POLE NUMBER	SIGNAL HEAD AND POLE PLACEMENT								NO. OF HEADS (EA) *	RADAR DET. (EA)	DR. SHAFT LENGTH (FT)		FDN. TYPE
	A (FT)	B (FT)	C (FT)	D (FT)	E (FT)	F (FT)	G (FT)	H (FT)			24" DIA	36" DIA	
P-1	8	25	12	10	48	19	30	13	3	1		14	36-A
P-2	5	19	12	14	48	19	30	13	3	1		14	36-A
P-3	16	30	11	13	44	19	24	13	3	1		14	36-A
P-4	PEDESTRIAN PUSH BUTTON POLE								-		6		24-A
P-5	9	20	12	14	48	19	30	13	3	1		14	36-A

*DOES NOT INCLUDE VERTICAL SIDEMOUNT SIGNAL HEADS OR PEDESTRIAN SIGNAL HEADS

Freese and Nichols, Inc.
Texas Registered Engineering Firm F-2144

11-22-19

FREESE NICHOLS
2711 North Haskell Ave, Suite 3300
Dallas, Texas 75204
Phone: 214-217-2200
Web: www.freese.com

CITY OF MIDLAND, TX
AVALON DR AT DEAUVILLE BLVD
CIVIL
TRAFFIC SIGNAL SUMMARY 1 OF 2

F&N JOB NO. M0019336
DATE 11/7/2019
DESIGNED
DRAWN
REVISED
CHECKED
FILE NAME CV-SUMM-TRAFSIGNAL.dwg

NO. | ISSUE | BY | DATE

VERIFY SCALE Bar is one inch on original drawing. If not one inch on this sheet, adjust scale.
0 1"

SHEET
SEQ. 9

ACAD Rel: 21.0s (LMS Tech)
File Name: N:\IF\Drawings\B. Traffic\CV-SUMM-TRAFSIGNAL.dwg
Last Saved: 11/18/2019 4:22 PM Saved By: 02480
Plot Date: 11/18/2019 5:21 PM Plot By: 02480 Filename: N:\IF\Drawings\B. Traffic\CV-SUMM-TRAFSIGNAL.dwg

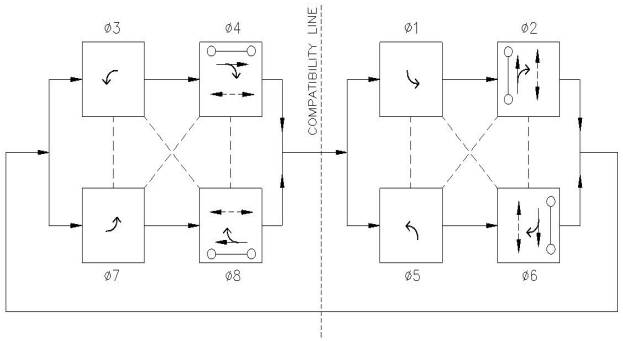

PHASE DIAGRAM

ø1,ø3,ø5 AND ø7 SHALL BE PROTECTED, PERMISSIVE

OLA = ø1+ø2
OLB = ø3+ø4
OLC = ø5+ø6
OLD = ø7+ø8

SIGN LEGEND	SIGN TYPE	SIGN DIMENSIONS	TEXT	STATUS	MOUNT TYPE
S1	R10-17	30"X36"	LT YIELD ON FLA YEL ARW	INSTALL	P-1 MAST ARM
S2	STREET NAME	18"X96"	DEAUVILLE	INSTALL	P-1 MAST ARM
S3	R10-17	30"X36"	LT YIELD ON FLA YEL ARW	INSTALL	P-2 MAST ARM
S4	STREET NAME	18"X96"	AVALON	INSTALL	P-2 MAST ARM
S5	R10-17	30"X36"	LT YIELD ON FLA YEL ARW	INSTALL	P-3 MAST ARM
S6	STREET NAME	18"X96"	DEAUVILLE	INSTALL	P-3 MAST ARM
S7	R10-17	30"X36"	LT YIELD ON FLA YEL ARW	INSTALL	P-5 MAST ARM
S8	STREET NAME	18"X96"	AVALON	INSTALL	P-5 MAST ARM

RADAR DETECTOR	MOUNTING LOCATION	MOUNTING HEIGHT	ZONE LOCATION	ZONE
R1	P-1 MAST ARM	19'	STOP BAR	ø2
				ø5
R2	P-2 MAST ARM	19'	STOP BAR	ø4
				ø7
R3	P-3 MAST ARM	19'	STOP BAR	ø1
				ø6
R4	P-4 MAST ARM	19'	STOP BAR	ø3
				ø8

NOTE:

1. ILSN SIGNS TO BE SUPPLIED BY THE CITY AND INSTALLED BY THE CONTRACTOR.

MINIMUM PEDESTRIAN TIMING			
PHASE	WALK	FLASHING DON'T WALK	TOTAL
ø2	7	26	33
ø4	7	23	30
ø6	7	26	33
ø8	7	23	30



R10-17
30"X36"

CABLE TERMINATION CHART						
CNDR NO.	CNDR. COLOR	CABLE 1 FROM CNTRL TO TO POLE P-1	CABLE 2 FROM CNTRL TO TO POLE P-2	CABLE 3 FROM CNTRL TO TO POLE P-3	CABLE 4 FROM CNTRL TO TO POLE P-4	CABLE 5 FROM CNTRL TO TO POLE P-5
1	BLACK	SPARE	SPARE	SPARE	SPARE	SPARE
2	WHITE	SH COM	SH COM	SH COM	SH COM	SH COM
3	RED	SH 2,3,4 ø6 R	SH 8,9,10 ø8 R	SH 14,15,16 ø2 R	SPARE	SH 20,21,22 ø4 R
4	GREEN	SH 2,3,4 ø6 G	SH 8,9,10 ø8 G	SH 14,15,16 ø2 G	SPARE	SH 20,21,22 ø4 G
5	ORANGE	SH 2,3,4 ø6 Y	SH 8,9,10 ø8 Y	SH 14,15,16 ø2 Y	SPARE	SH 20,21,22 ø4 Y
6	BLUE	SH 5,6,-ø4 DW	SH 11,12-ø8 DW	SPARE	SH 17,18-ø8 DW	SH 23,24-ø8 DW
7	WHITE/BLACK	SH 5,6,-ø4 W	SH 11,12-ø8 W	SPARE	SH 17,18-ø8 W	SH 23,24-ø8 W
8	RED/BLACK	SPARE	SPARE	SPARE	SPARE	SPARE
9	GREEN/BLACK	SPARE	SPARE	SPARE	SPARE	SPARE
10	ORANGE/BLACK	SPARE	SPARE	SPARE	SPARE	SPARE
11	BLUE/BLACK	SPARE	SPARE	SPARE	SPARE	SPARE
12	BLACK/WHITE	SPARE	SPARE	SPARE	SPARE	SPARE
13	RED/WHITE	SH 1 OLA R (LT ARW)	SH 7 OLB R (LT ARW)	SH 13 OLC R (LT ARW)	SPARE	SH 19 OLD R (LT ARW)
14	GREEN/WHITE	SH 1 OLA R (LT ARW)	SH 7 OLB R (LT ARW)	SH 13 OLC R (LT ARW)	SPARE	SH 19 OLD R (LT ARW)
15	BLUE/WHITE	SH 1 ø1 G (LT ARW)	SH 7 ø3 G (LT ARW)	SH 13 ø5 G (LT ARW)	SPARE	SH 19 ø7 G (LT ARW)
16	BLACK/RED	SH 1 ø1 Y (LT ARW)	SH 7 ø3 Y (LT ARW)	SH 13 ø5 Y (LT ARW)	SPARE	SH 19 ø7 Y (LT ARW)
17	WHITE/RED	SPARE	SPARE	SPARE	SPARE	SPARE
18	ORANGE/RED	SH 1 OLA FY (LT ARW)	SH 7 OLB FY (LT ARW)	SH 13 OLC FY (LT ARW)	SPARE	SH 19 OLD FY (LT ARW)
19	BLUE/RED	SPARE	SPARE	SPARE	SPARE	SPARE
20	RED/GREEN	SPARE	SPARE	SPARE	SPARE	SPARE

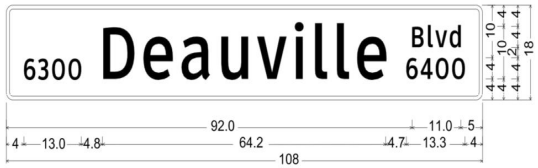

1.5" Radius, 0.5" Border, White on Green;
[Deauville] White ClearviewHwy-3-W;[6300] White ClearviewHwy-3-W;
[6400] White ClearviewHwy-3-W; [Blvd] White ClearviewHwy-3-W;

S2
108"X18"

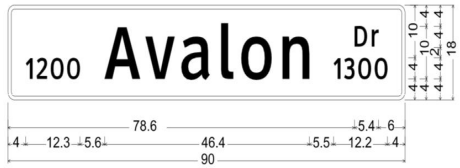

1.5" Radius, 0.5" Border, White on Green;
[Avalon] White ClearviewHwy-3-W; [1200] White ClearviewHwy-3-W;
[1300] White ClearviewHwy-3-W; [Dr] White ClearviewHwy-3-W;

S4
90"X18"

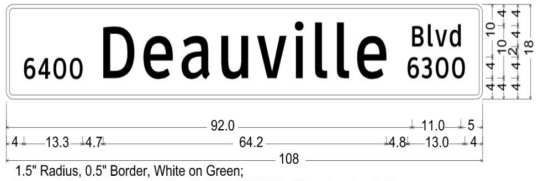

1.5" Radius, 0.5" Border, White on Green;
[Deauville] White ClearviewHwy-3-W;[6400] White ClearviewHwy-3-W;
[6300] White ClearviewHwy-3-W; [Blvd] White ClearviewHwy-3-W;

S6
108"X18"

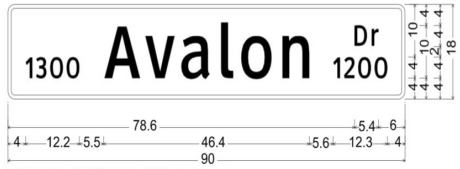

1.5" Radius, 0.5" Border, White on Green;
[Avalon] White ClearviewHwy-3-W; [1300] White ClearviewHwy-3-W;
[1200] White ClearviewHwy-3-W; [Dr] White ClearviewHwy-3-W;

S8
90"X18"

Freese and Nichols, Inc.
Texas Registered Engineering Firm F-2144

11-22-19

FREESE NICHOLS
2711 North Haskell Ave, Suite 3300
Dallas, Texas 75204
Phone: 214-217-2200
Web: www.freese.com

CITY OF MIDLAND, TX
AVALON DR AT DEAUVILLE BLVD
CIVIL
TRAFFIC SIGNAL SUMMARY 2 OF 2

NO.	ISSUE	BY	DATE

F&N JOB NO. 00193.36
DATE 11/2019
DESIGNED
DRAWN
REVISED
CHECKED
FILE NAME CV-SUMM-SIGNS AND PVMRK.dwg

VERIFY SCALE Bar is one inch on original drawing. If not one inch on this sheet, adjust scale.
0 1"

SHEET
SEQ. 10

ACAD Rel: 21.0s (LMS Tech)
Xrefs: N:\IF\Drawings\B. Traffic\CV-SUMM-SIGNS AND PVMRK.dwg
Last Saved: 11/18/2019 3:06 PM Saved By: 02480

Plot Date: 11/18/2019 5:21 PM Plot By: 02480 Filename: N:\IF\Drawings\B. Traffic\CV-SUMM-SIGNS AND PVMRK.dwg

PACKET

July 11, 2023

LEFT TURN BAY STRIPING		
	L1	L2
SOUTHBOUND	½ L2	TBD
NORTHBOUND	½ L2	TBD
EASTBOUND	½ L2	TBD
WESTBOUND	½ L2	TBD

NOTE: ERADICATE EXISTING DBL YELLOW CENTERLINE=L1+L2

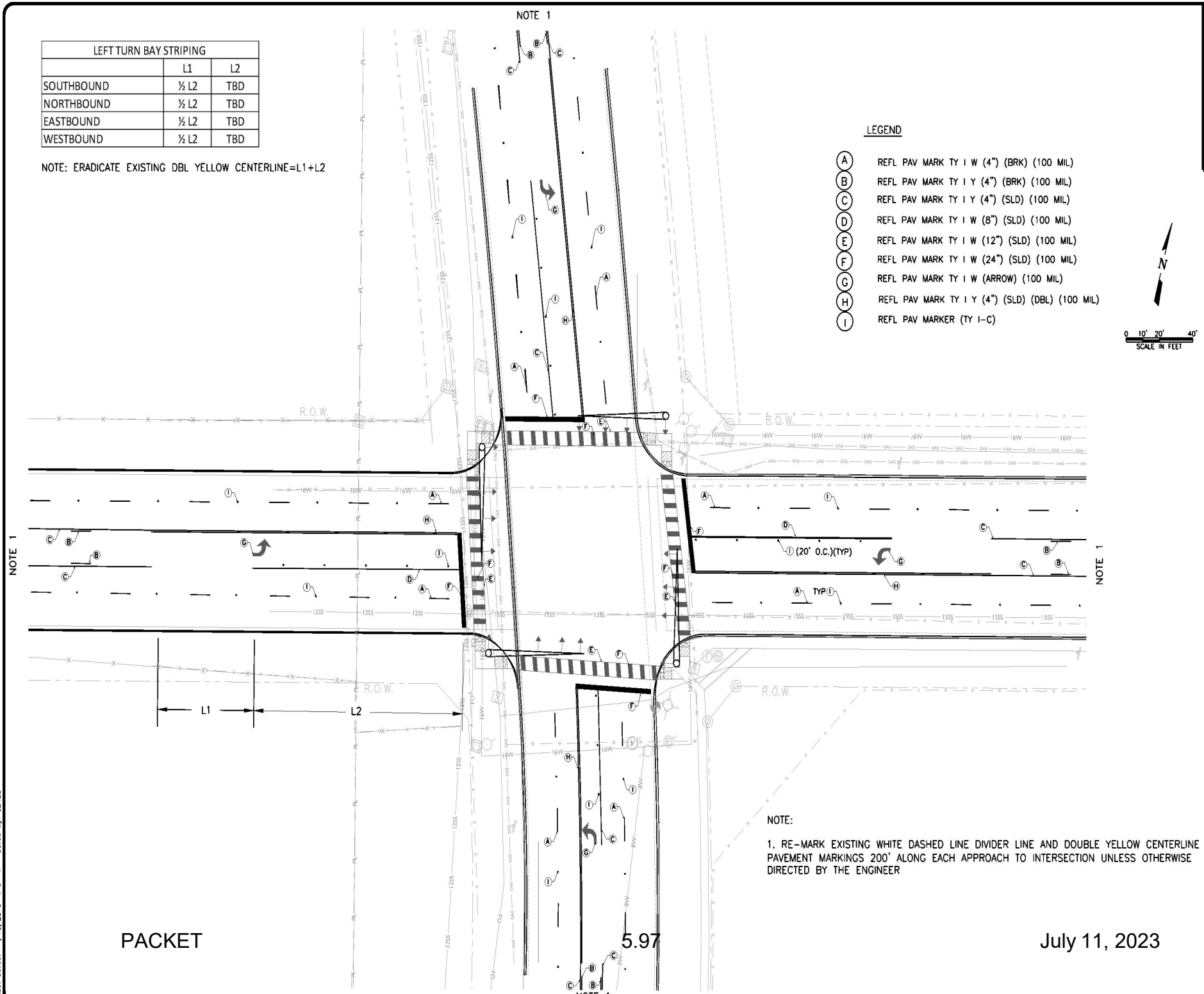

NOTE:

1. RE-MARK EXISTING WHITE DASHED LINE DIVIDER LINE AND DOUBLE YELLOW CENTERLINE PAVEMENT MARKINGS 200' ALONG EACH APPROACH TO INTERSECTION UNLESS OTHERWISE DIRECTED BY THE ENGINEER

Freese and Nichols, Inc.
Texas Registered Engineering Firm F-2144
FREESE NICHOLS
2711 North Haskell Ave., Suite 3300
Dallas, Texas 75204
(214) 217-2200
Web - www.freese.com

11-22-19

CITY OF MIDLAND, TX
AVALON DR AT DEAUVILLE BLVD
CIVIL
PAVEMENT MARKINGS

T&R JOB NO. MD019336
DATE 11/2019
DESIGNED
DRAWN
CHECKED
FILE NAME CV-TRT-PL-DEAUVILLEATAVALON-pvmrk.dwg

NO. ISSUE BY DATE

VERIFY SCALE Bar is one inch on original drawing. If not one inch on this sheet, adjust scale.
0 1"

SHEET
SEQ. 11

ACAD Rel: 21.0s (LMS Tech)
File Name: N:\IF\Drawings\8. Traffic\CV-TRT-PL-DEAUVILLEATAVALON-pvmrk.dwg
Last Saved: 11/13/2019 1:48 PM Saved By: 02480

Plot Date: 11/18/2019 5:22 PM Plot By: 02480 Filename: N:\IF\Drawings\8. Traffic\CV-TRT-PL-DEAUVILLEATAVALON-pvmrk.dwg

DISCLAIMER:
The use of this standard is governed by the "Texas Engineering Practice Act". No warranty of any kind is made by TxDOT for any purpose whatsoever. TxDOT assumes no responsibility for the conversion of this standard to other formats or for incorrect results or damages resulting from its use.

DATE:
FILE:

ARM SIZE D_1	ARM SIZE ≠	A	B	C	D	E	CONN BOLT DIA
in.	in.	in.	in.	in.	in.	in.	in.
6.5	.179	12	9	9	6	1 3/4	1
7.5	.179	13	9	10	6	1 3/4	1
8.0	.179	14	10	11	7	2	1 1/4
9.0	.179	16	11	13	8	2	1 1/4
9.5	.179	17	12	14	9	2	1 1/4
9.5	.239	18	12	15	9	2	1 1/4
10.0	.239	18	12	15	9	2	1 1/4
10.5	.239	18	13	15	10	3	1 1/2
11.0	.239	18	13	15	10	3	1 1/2

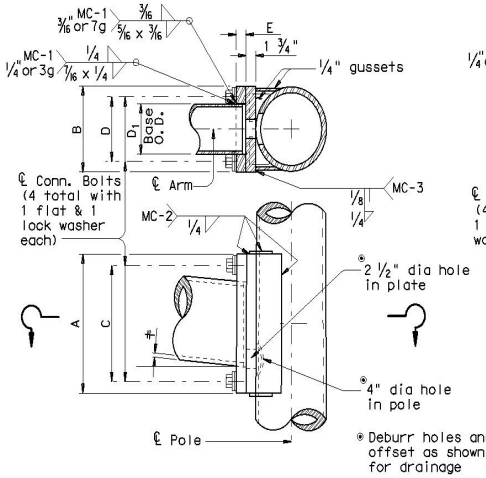

FIXED MOUNT DETAIL 1

ARM SIZE D_1	ARM SIZE ≠	A	B	C	D	E	CONN BOLT DIA
in.	in.	in.	in.	in.	in.	in.	in.
7.0	.179	11	11	8	8	1 3/4	1 1/4
7.5	.179	11	11	8	8	1 3/4	1 1/4
8.0	.179	11	11	8	8	2	1 1/4
9.0	.179	13	13	10	10	2	1 1/4
10.0	.179	13	13	10	10	2	1 1/4
9.5	.239	13	13	10	10	2	1 1/4
10.0	.239	14	14	11	11	2	1 1/2
11.0	.239	14	14	11	11	3	1 1/2
11.5	.239	14	14	11	11	3	1 1/2

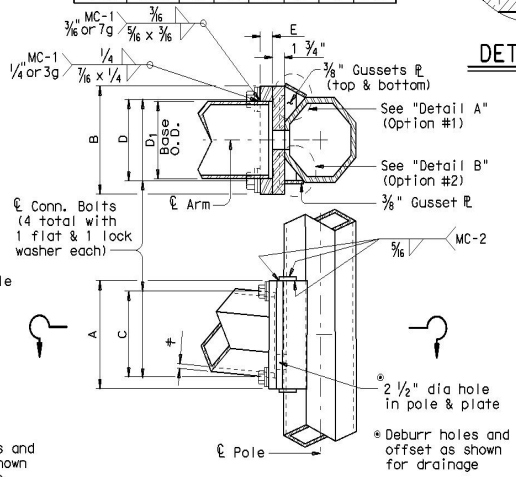

FIXED MOUNT DETAIL 2

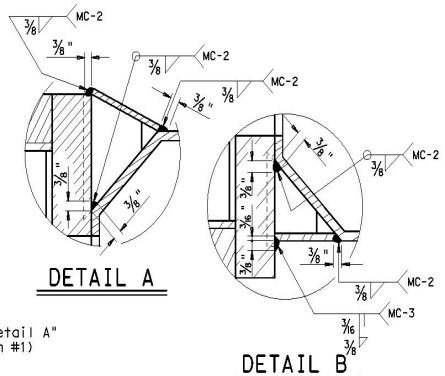

DETAIL A

DETAIL B

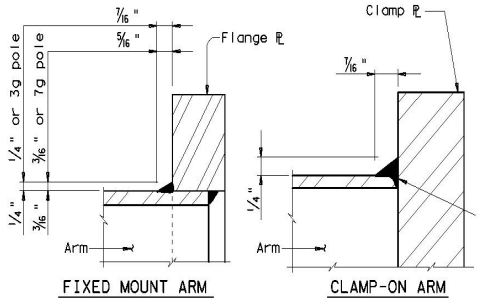

FIXED MOUNT ARM

CLAMP-ON ARM

ARM BASE WELD DETAILS

MATERIALS	
Round Shafts or Polygonal Shafts①	ASTM A595 Gr.A, A588, A1008 HSLAS Gr.50 Class 2, A1011 HSLAS Gr.50 Class 2, A572 Gr.50 or A1011 SS Gr.50 ②
Plates①	ASTM A36, A588, or A572 Gr.50
Connection Bolts	ASTM A325 or A449, except where noted
Pin Bolts	ASTM A325
Pipe①	ASTM A53 Gr.B, A501, A1008 HSLAS-F Gr.50, A1011 HSLAS-F Gr.50
Misc. Hardware	Galvanized steel or stainless steel or as noted

① ASTM A572, A1008 HSLAS, A1011 HSLAS, A1008 HSLAS-F, A1011 HSLAS-F or A1011 SS may have higher yield strengths but shall not have less elongation than the grade indicated.

② ASTM A1011 SS Gr.50 material shall also have a minimum elongation of 18 percent in 8 inches or 23 percent in 2 inches. Material thickness in excess of those stipulated under A1011 SS will be acceptable providing the material meets all other A1011 SS requirements and the requirements of this item.

ARM SIZE D_1	ARM SIZE ≠	A	F	CONN. BOLTS No.	CONN. BOLTS Dia	PIN BOLTS No.	PIN BOLTS Dia
in.	in.	in.	in.	ea.	in.	ea.	in.
6.5	.179	12	6	4	1	2	5/8
7.5	.179	14	8	4	1	2	5/8
8.0	.179	14	8	4	1	2	5/8
9.0	.179	16	10	4	1	2	5/8
9.5	.179	18	12	4	1 1/4	3	5/8
9.5	.239	18	12	4	1 1/4	3	5/8
10.0	.239	18	12	4	1 1/4	3	5/8

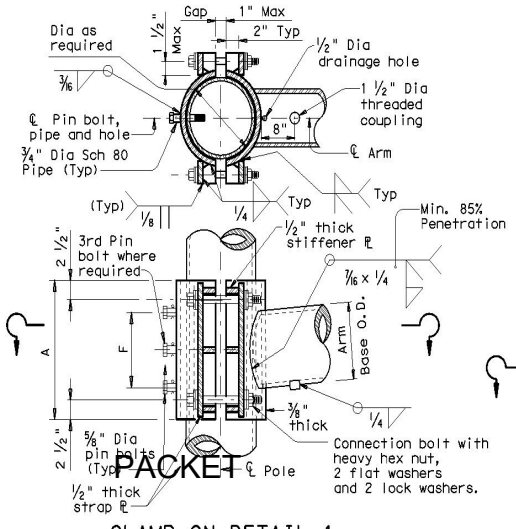

CLAMP-ON DETAIL 1

ARM SIZE D_1	ARM SIZE ≠	A	F	T	CONN. BOLTS No.	CONN. BOLTS Dia	PIN BOLTS No.	PIN BOLTS Dia
in.	in.	in.	in.	in.	ea.	in.	ea.	in.
7.0	.179	12	6	3/4	4	3/4	2	5/8
7.5	.179	14	8	3/4	4	3/4	2	5/8
8.0	.179	14	8	3/4	4	3/4	2	5/8
9.0	.179	16	10	7/8	4	1	2	5/8
10.0	.179	18	10	7/8	4	1	2	5/8
9.5	.239	18	10	1	6	1	3	5/8
10.0	.239	18	10	1	6	1	3	5/8

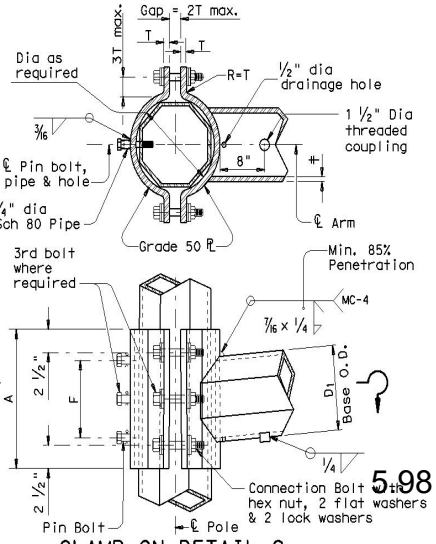

CLAMP-ON DETAIL 2

ARM SIZE D_1	ARM SIZE ≠	A	F	CONN. BOLTS No.	CONN. BOLTS Dia	PIN BOLTS No.	PIN BOLTS Dia
in.	in.	in.	in.	ea.	in.	ea.	in.
6.5	.179	12	6	4	1	2	5/8
7.5	.179	14	8	4	1	2	5/8
8.0	.179	14	8	4	1	2	5/8
9.0	.179	16	10	4	1	2	5/8
9.5	.179	18	12	6	1	3	5/8
9.5	.239	18	12	6	1	3	5/8
10.0	.239	18	12	6	1	3	5/8

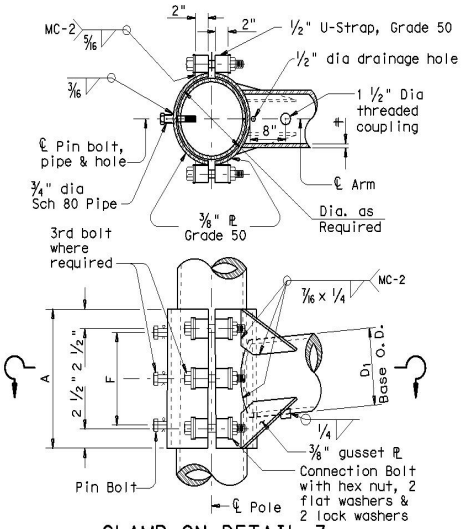

CLAMP-ON DETAIL 3

GENERAL NOTES:

Clamp-on details are used for the second arm on dual mast arm assemblies. A Maximum 1 1/2" wide vertical slotted hole shall be cut in the front clamp plate to facilitate drainage during galvanizing. The slot shall be centered behind the arm and shall be no longer than the arm diameter minus 1"

Fixed mount details are used for single mast arm assemblies and for the first arm on dual mast arm assemblies.

Where duplicate parts occur on a detail, welds shown for one part shall apply to all similar parts on the detail.

Pin bolts are required to prevent rotation of clamp-on arms under design wind forces.

NOTE:

Pin bolts shall be A325 with threads excluded from the shear plane. Pin bolt and 3/4" dia pipe shall have 5/16" dia holes for a 1/8" dia galvanized cotter pin. Back clamp plate shall be furnished with a 3/4" dia hole for each pin bolt. An 11/16" dia hole for each pin bolt shall be field drilled through the pole after arm orientations have been approved by the Engineer.

Texas Department of Transportation
Traffic Operations Division

STANDARD ASSEMBLY FOR TRAFFIC SIGNAL SUPPORT STRUCTURES

MAST ARM CONNECTIONS

MA-C-12

July 11, 2023

PACKET 5.98

© TxDOT August 1995

DN: MS	CK: JSY	DW: MMF	CK: JSY
REVISIONS	CONT	SECT	JOB	HIGHWAY
5-96				
5-09				
1-12				
	DIST	COUNTY		SHEET NO.
				12

126A

DISCLAIMER: The use of this standard is governed by the "Texas Engineering Practice Act". No warranty of any kind is made by TxDOT for any purpose whatsoever. TxDOT assumes no responsibility for the conversion of this standard to other formats or for incorrect results or damages resulting from its use.

DATE:
FILE:

TABLE OF DIMENSIONS for ILSN Support Arm Clamp-on Details 1, 2 and 3						
ILSN ARM SIZE	A	F	CONN. BOLTS		PIN BOLTS	
			No.	Dia	No.	Dia
3 in. dia Schedule 40 Pipe	in.	in.	ea.	in.	ea.	in.
	10	4	4	¾	2	⅝

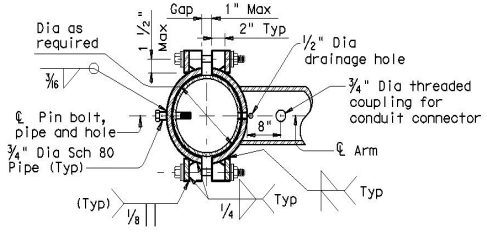

SECTION A-A

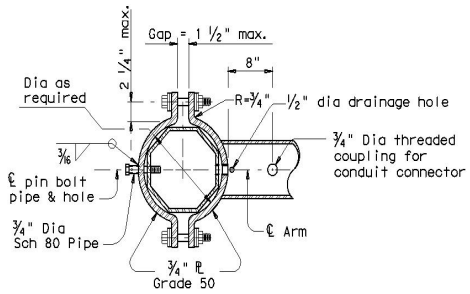

SECTION B-B

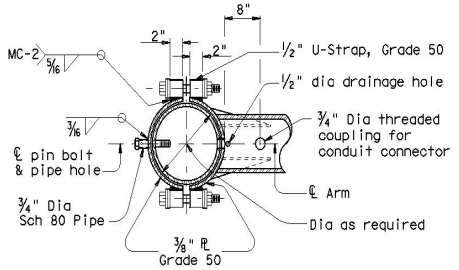

SECTION C-C

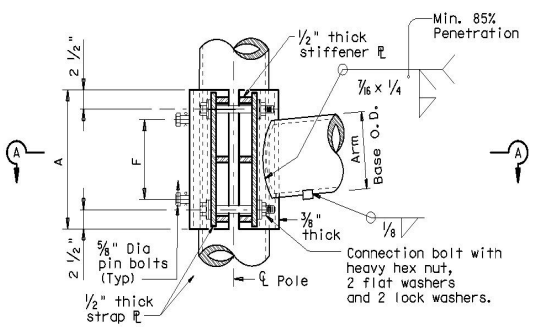

ILSN CLAMP-ON DETAIL 1

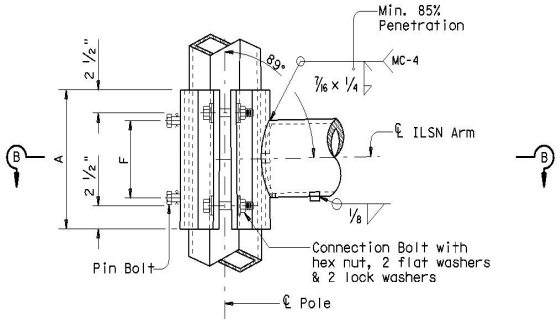

ILSN CLAMP-ON DETAIL 2

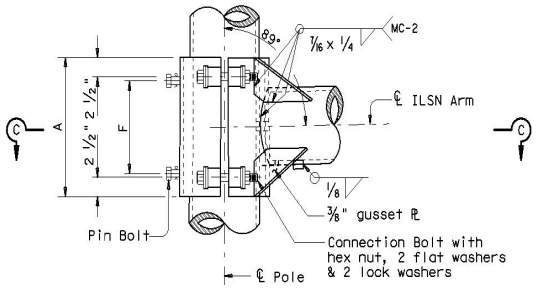

ILSN CLAMP-ON DETAIL 3

GENERAL NOTES:

Clamp-on details shall be used for ILSN support arm assemblies. A 1 ½" inch diameter hole shall be cut in the front clamp plate for wiring access. A matched hole shall be field drilled through the pole to provide wire access after arm is oriented. Deburr both holes.

Where duplicate parts occur on a detail, welds shown for one part shall apply to all similar parts on the details.

Pin bolts are required to prevent rotation of clamp-on arms under design wind forces.

NOTE:

Pin bolts shall be A325 with threads excluded from the shear plane. Pin bolt and ¾" dia pipe shall have 7/16" dia holes for a ⅛" dia galvanized cotter pin. Back clamp plate shall be furnished with a ¾" dia hole for each pin bolt. An 11/16" dia hole for each pin bolt shall be field drilled through the pole after arm orientations have been approved by the Engineer.

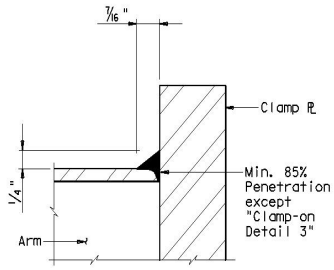

CLAMP-ON ARM

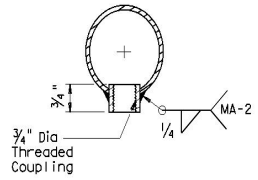

ILSN ARM COUPLING DETAIL

ARM BASE WELD DETAILS

Texas Department of Transportation
Traffic Operations Division

STANDARD ASSEMBLY FOR TRAFFIC SIGNAL SUPPORT STRUCTURES

MAST-ARM CONNECTIONS

MA-C(ILSN)-12

© TxDOT August 1995

DN: MS	CK: JSY	DW: MMF	CK: JSY
REVISIONS	CONT	SECT	JOB	HIGHWAY
5-96				
1-12				
	DIST	COUNTY		SHEET NO.
				13

126B

PACKET 5.99 July 11, 2023

DISCLAIMER: The use of this standard is governed by the "Texas Engineering Practice Act". No warranty of any kind is made by TxDOT for any purpose whatsoever. TxDOT assumes no responsibility for the conversion of this standard to other formats or for incorrect results or damages resulting from its use.

DATE:
FILE:

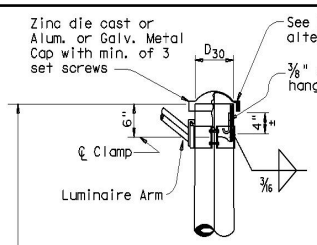

DETAIL A

(for pole with luminaire)

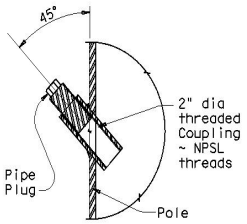

POLE COUPLING DETAIL

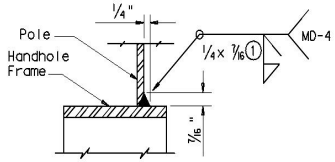

DETAIL G

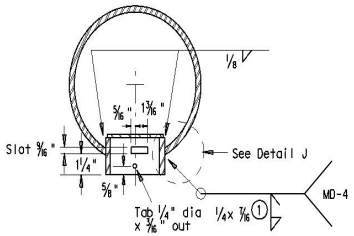

SECTION X-X

Opening for access compartment shall be no more than 1/16 inch wider than the access compartment itself.

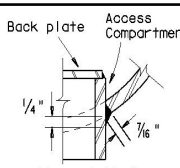

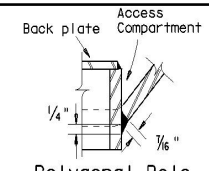

DETAIL J

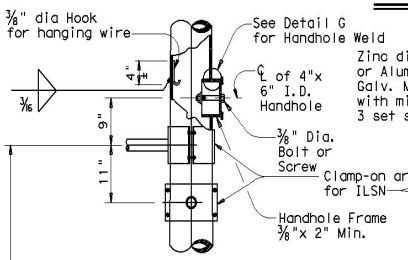

DETAIL B

(If ILSN applied)

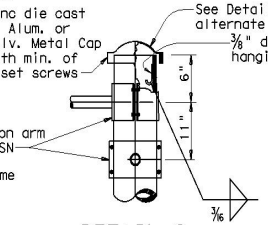

DETAIL C

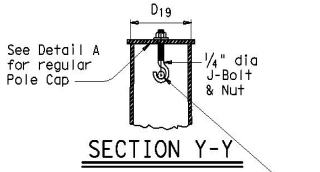

SECTION Y-Y

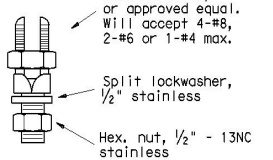

COPPER GROUND CONNECTOR

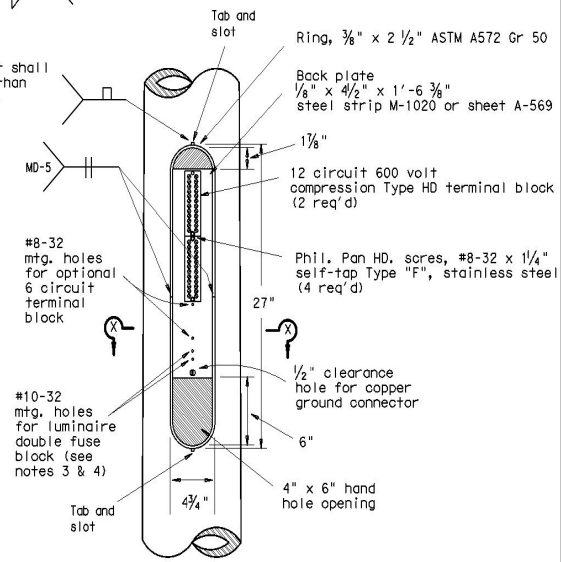

ACCESS COMPARTMENT

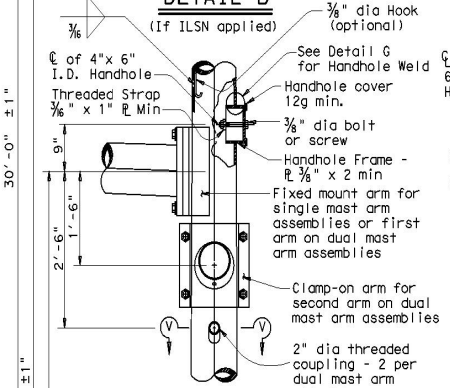

DETAIL D

(for 30' pole with luminaire and ILSN sign)

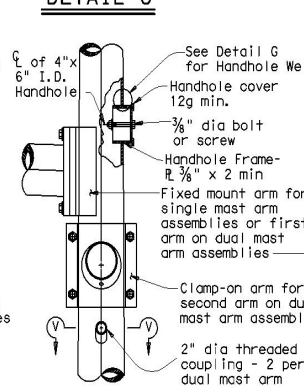

DETAIL E

(for 24' pole with ILSN sign and no luminaire)

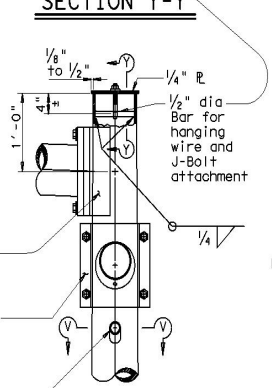

DETAIL F

(for 19' pole with no ILSN sign and no luminaire)

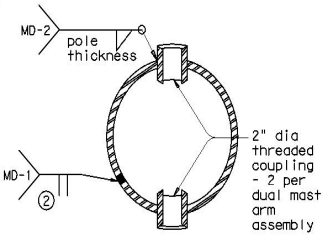

SECTION V-V

NOTES:

1. The cover shall be one piece formed from ABS plastic, shall be a pearl gray color, and shall be suitable for exposure to harsh sunlight and extreme weather. Cover shall latch with two screw latches and shall fit tightly to the enclosure ring to create a rainproof seal. Latch screws shall be 1/4-20 stainless flat socket head screws with tamper proof feature.
2. The pole manufacturer shall provide with each pole a separate kit consisting of: one cover with two latching assemblies, two terminal strips (Marathon #985GP12CU or approved equal), four #8-32 x 1 1/4" self tapping type "F" stainless steel pan head screws, and one ground connector (Blackburn TTC, Burndy KC22J12T13, or Ilsco SSS-5). The traffic signal contractor shall install the kit items in the field.
3. The screw hole spacing on the enclosure back plate shall be for two Marathon #985GP12 terminal strips, one Marathon #985GP06CU terminal strip, and one Bussmann #BM6032B fuse block.
4. Install one Bussmann #BM6032B, Littelfuse #L60030M-2C, or Ferraz-Shawmut #30352 fuse block for poles where luminaires are to be installed.

Anchor Bolt Diameter	Bolt Hole Diameter	Slot Length	Bolt Circle Diameter	Base PL Dim. L x T	Adjust. Range
1 1/2"	1 3/4"	3 1/2"	17"	18" x 1 1/2"	13.4°
1 3/4"	2"	4"	19"	20" x 1 3/4"	13.5°
2"	2 1/4"	4 1/2"	21"	22" x 2"	13.6°
2 1/4"	2 1/2"	5"	23"	24" x 2 1/4"	13.7°

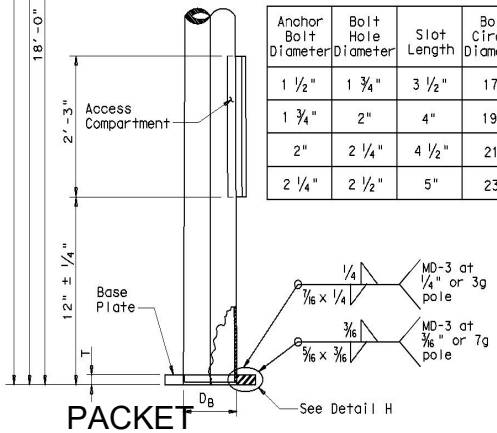

PACKET

POLE ELEVATION

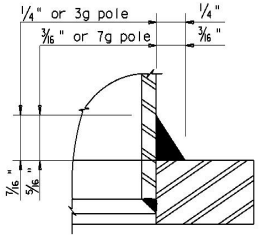

DETAIL H

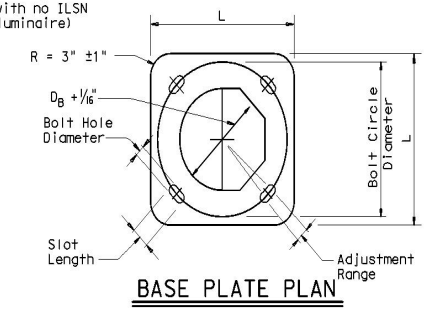

BASE PLATE PLAN

① 85% Min. penetration

② 60% Min. penetration 100% pemetration within 6" of circumferential base welds.

Texas Department of Transportation
Traffic Operations Division

TRAFFIC SIGNAL SUPPORT STRUCTURES MAST ARM POLE DETAILS

MA-D-12

5.100

July 11, 2023

© TxDOT August 1995

DN: MS	CK: JSY	DW: FDN	CK: CAL
REVISIONS	CONT	SECT	JOB	HIGHWAY
8-99 1-12				
	DIST	COUNTY		SHEET NO.
				14

127

DISCLAIMER:
The use of this standard is governed by the "Texas Engineering Practice Act". No warranty of any kind is made by TxDOT for any purpose whatsoever. TxDOT assumes no responsibility for the conversion of this standard to other formats or for incorrect results or damages resulting from its use.

DATE:
FILE:

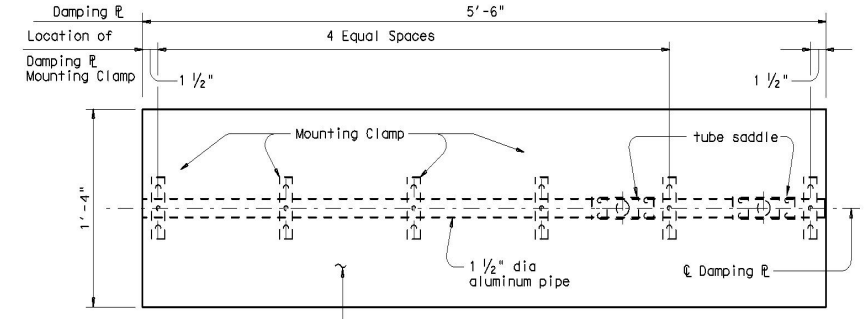

PLAN

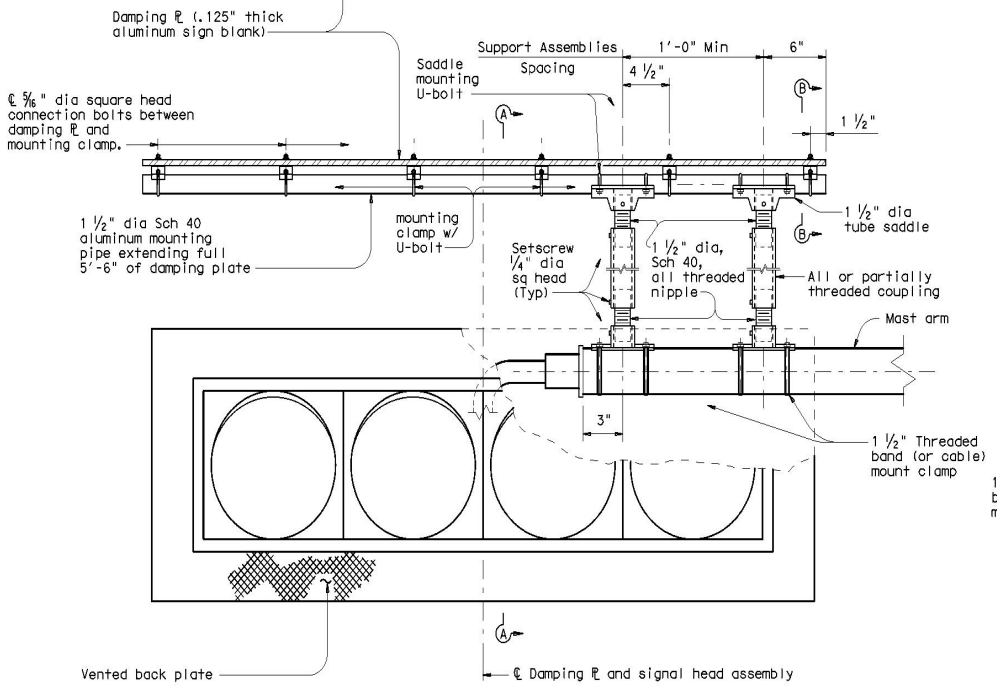

ELEVATION

DAMPING PLATE MOUNTING DETAILS

(Showing alternate placement of signal head)

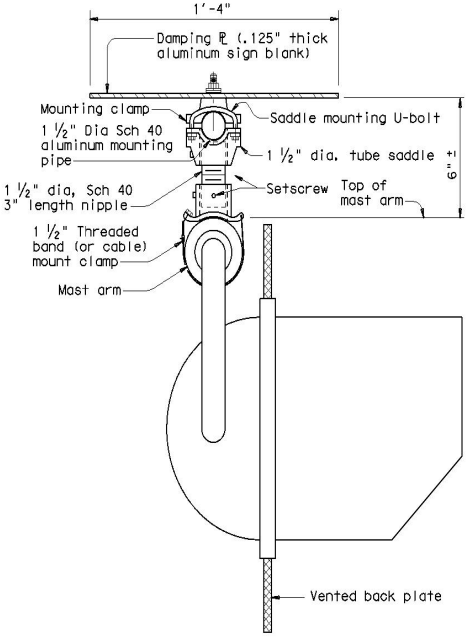

SECTION A-A

(Showing standard placement of signal head)
(Mounting clamp U-bolt is not shown for clarity)

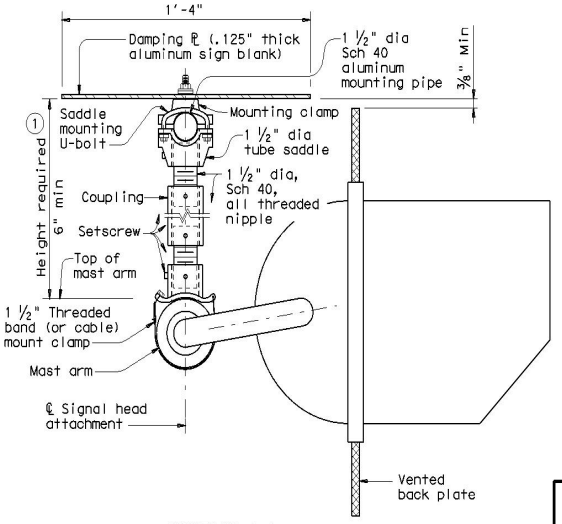

SECTION A-A

(Showing alternate placement of signal head)
(Mounting clamp U-bolt is not shown for clarity)

① Recommended supporting assemblies to achieve required height			
Height required	One nipple each length	Two nipples each length plus	One coupling each length
6"-6 ¾"	3"	-	-
7"-8 ½"	4"	-	-
9"-10 ½"	6"	-	-
11"-15 ½"	-	4"	5"
16"-24"	-	6"	10"

GENERAL NOTES:

In accordance with the findings of TxDOT sponsored research, the installation of a damping plate in accordance with the details shown here at the end of signal mast arms of SMA and DMA standard structures reduces excessive harmonic vertical vibration, and thus fatigue damage. Any deviation from these details may reduce the effectiveness of this damping device.

Aluminum sign blank for damping plate shall conform to Departmental Material Specifications DMS-7110. Materials for mast arm mounting clamp and tube saddle shall be aluminum castings or aluminum alloys as in accordance with manufacturers' stipulations. Mounting pipe, pipe nipple and coupling shall be aluminum alloy 6061-T6 or 6063-T6. Damping plate mounting clamp and u-bolt assemblies shall conform to Standard sheet SMD(GEN)-08. U-bolts for saddle mounting shall have a minimum yield strength of 36 ksi.

Damping plate shall be mounted horizontally. Position centerline of damping plate to align with centerline of signal head assembly. Vertical clearance between signal head (with or without backing plate) and bottom of damping plate shall be maintained as shown. The attachments shown here are examples only, other supporting details which meet both alignment and vertical clearance requirements are also acceptable.

Unless stipulated by the manufacturers, all steel parts shall be galvanized finish in accordance with Standard Specification Item 445, "Galvanizing".

Contractor shall verify applicable field dimensions before the installation.

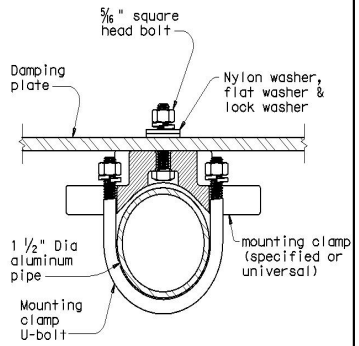

SECTION B-B

(Showing damping plate attachment)

Texas Department of Transportation
Traffic Operations Division

MAST ARM DAMPING PLATE DETAILS

MA-DPD-12

© TxDOT January 2012

DN: JSY	CK: ARC	DW: TGG	CK: JSY
REVISIONS	CONT	SECT	JOB	HIGHWAY
	DIST	COUNTY		SHEET NO.
				15

DISCLAIMER: The use of this standard is governed by the "Texas Engineering Practice Act". No warranty of any kind is made by TxDOT for any purpose whatsoever. TxDOT assumes no responsibility for the conversion of this standard to other formats or for incorrect results or damages resulting from its use.

Arm Length	ROUND POLES					POLYGONAL POLES					Foundation Type
	D_B	D_{19}	D_{24}	D_{30}	① thk	D_B	D_{19}	D_{24}	D_{30}	① thk	
ft.	in.	in.	in.	in.	in.	in.	in.	in.	in.	in.	
20	10.5	7.8	7.1	6.3	.179	11.5	8.5	7.7	6.8	.179	30-A
24	11.0	8.3	7.6	6.8	.179	12.0	9.0	8.2	7.3	.179	30-A
28	11.5	8.8	8.1	7.3	.179	12.5	9.5	8.7	7.8	.179	30-A
32	12.5	9.8	9.1	8.3	.179	12.0	9.0	8.2	7.3	.239	30-A
36	12.0	9.3	8.6	7.8	.239	12.5	9.5	8.7	7.8	.239	36-A
40	12.0	9.3	8.6	7.8	.239	13.5	10.5	9.7	8.8	.239	36-A
44	12.5	9.8	9.1	8.3	.239	14.0	11.0	10.2	9.3	.239	36-A
48	13.0	10.3	9.6	8.8	.239	15.0	12.0	11.2	10.3	.239	36-A

Arm Length	ROUND ARMS					POLYGONAL ARMS				
	L_1	D_1	D_2	① thk	Rise	L_1	D_1	② D_2	① thk	Rise
ft.	ft.	in.	in.	in.		ft.	in.	in.	in.	
20	19.1	6.5	3.8	.179	1'-9"	19.1	7.0	3.5	.179	1'-8"
24	23.1	7.5	4.3	.179	1'-10"	23.1	7.5	3.5	.179	1'-9"
28	27.1	8.0	4.2	.179	1'-11"	27.1	8.0	3.5	.179	1'-10"
32	31.0	9.0	4.7	.179	2'-1"	31.0	9.0	3.5	.179	2'-0"
36	35.0	9.5	4.6	.179	2'-4"	35.0	10.0	3.5	.179	2'-1"
40	39.0	9.5	4.1	.239	2'-8"	39.0	9.5	3.5	.239	2'-3"
44	43.0	10.0	4.1	.239	2'-11"	43.0	10.0	3.5	.239	2'-6"
48	47.0	10.5	4.1	.239	3'-4"	47.0	11.0	3.5	.239	2'-9"

D_B = Pole Base O.D.
D_{19} = Pole Top O.D. with no Luminaire and no ILSN
D_{24} = Pole Top O.D. with ILSN w/out Luminaire
D_{30} = Pole Top O.D. with Luminaire
D_1 = Arm Base O.D.
D_2 = Arm End O.D.
L_1 = Shaft Length
L = Nominal Arm Length

① Thickness shown are minimums, thicker materials may be used.

② D_2 may be increased by up to 1" for polygonal arms.

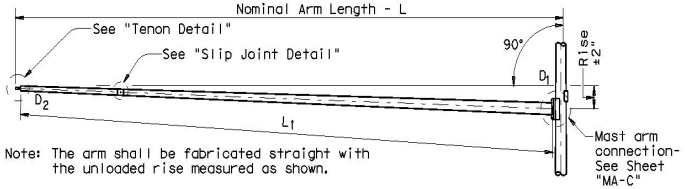

Note: The arm shall be fabricated straight with the unloaded rise measured as shown.

TRAFFIC SIGNAL ARM

(Fixed Mount)

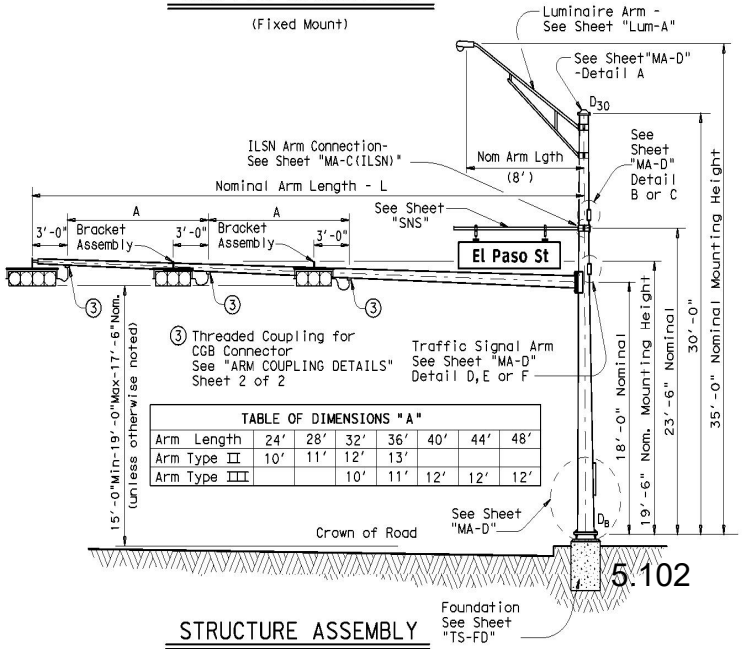

TABLE OF DIMENSIONS "A"							
Arm Length	24'	28'	32'	36'	40'	44'	48'
Arm Type II	10'	11'	12'	13'			
Arm Type III			10'	11'	12'	12'	12'

STRUCTURE ASSEMBLY

SHIPPING PARTS LIST

Ship each pole with the following attached: enlarged hand hole, pole cap, fixed-arm connection bolts and washers and any additional hardware listed in the table.

Nominal Arm Length	30' Poles With Luminaire		24' Poles With ILSN		19' Poles With No Luminaire and No ILSN	
	Above hardware plus: One (or two if ILSN attached) small hand hole, clamp-on simplex		Above hardware plus one small hand hole		See note above	
ft	Designation	Quantity	Designation	Quantity	Designation	Quantity
20	20L-80		20S-80		20-80	
24	24L-80		24S-80		24-80	
28	28L-80		28S-80		28-80	
32	32L-80		32S-80		32-80	
36	36L-80		36S-80		36-80	
40	40L-80		40S-80		40-80	
44	44L-80		44S-80	1	44-80	
48	48L-80	3	48S-80		48-80	

Traffic Signal Arms (1 per Pole) Ship each arm with the listed equipment attached

Nominal Arm Length	Type I Arm (1 Signal) 1 CGB connector		Type II Arm (2 Signals) 1 Bracket Assembly and 2 CGB Connectors		Type III Arm (3 Signals) 2 Bracket Assemblies and 3 CGB Connectors	
ft	Designation	Quantity	Designation	Quantity	Designation	Quantity
20	20I-80					
24	24I-80		24II-80			
28	28I-80		28II-80			
32			32II-80		32III-80	
36			36II-80		36III-80	
40					40III-80	
44					44III-80	1
48					48III-80	3

Luminaire Arms (1 per 30' pole)

Nominal Arm Length	Quantity
8' Arm	3

ILSN Arm (Max. 2 per pole) Ship with clamps, bolts and washers

Nominal Arm Length	Quantity
7' Arm	
9' Arm	4

Anchor Bolt Assemblies (1 per pole)

Anchor Bolt Diameter	Anchor Bolt Length	Quantity
1 ½"	3'-4"	
1 ¾"	3'-10"	4

Each anchor bolt assembly consists of the following: Top and Bottom templates, 4 anchor bolts, 8 nuts, 8 flat washers, and 4 nut anchor devices (Type 2) per Standard Drawing "TS-FD".

Templates may be removed for shipment.

STATE OF TEXAS KEVIN R. ST. JACQUES 80700 LICENSED PROFESSIONAL ENGINEER
11-22-19

Texas Department of Transportation
Traffic Operations Division

TRAFFIC SIGNAL SUPPORT STRUCTURES

SINGLE MAST ARM ASSEMBLY

(80 MPH WIND ZONE)

SMA-80(1)-12

© TxDOT August 1995

DN: MS	CK: JSY	DW: VMF	CK: JSY
REVISIONS	CONT	SECT	JOB	HIGHWAY
5-96				
11-99				
1-12				
	DIST	COUNTY		SHEET NO.
				16

122A

DATE: July 11, 2023
FILE:

DISCLAIMER: The use of this standard is governed by the "Texas Engineering Practice Act". No warranty of any kind is made by TxDOT for any purpose whatsoever. TxDOT assumes no responsibility for the conversion of this standard to other formats or for incorrect results or damages resulting from its use.

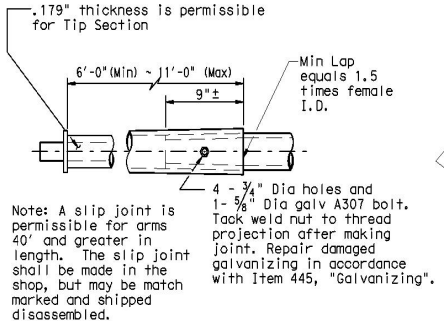

SLIP JOINT DETAIL

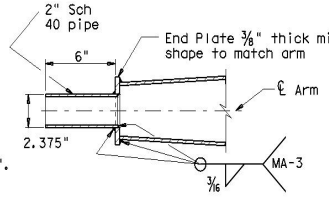

TENON DETAIL

VIBRATION WARNING

Mast Arms of SMA and DMA structures and clamp-on Arms of LMA structures of approximately 40 ft or longer are subject to harmonic vertical vibrations in light wind conditions due to the aeroelastic characteristics of a few of the myriads of possible combinations of the following: signal numbers, weights and positions; existence/solidity of backplates; presence of additional attachments to the arm, such as signs and cameras; arm-wind orientation; and arm-pole stiffness.

Such vibrations may cause fatigue damage to the structure and may lead to galloping in moderate wind conditions which may further damage the structure and alarm the public. Tests have indicated that when wind is blowing toward the back side of signal heads having un-vented backplates attached the probability of unacceptable harmonic vibration and/or galloping is rather high.

If backplates are not required for improved visibility they should not be applied to the signal heads or, if they must be applied, they should be vented as a first and inexpensive measure to mitigate vibrations.

The traffic signal mast arms shall be visually inspected in 5 to 20 mph wind conditions after installation of signal heads and any attachments, including any required backpates. If vertical movements with a total excursion (maximum upward excursion to maximum downward excursion) of more than approximately 8" are observed at the arm tip, a damping plate shall be fitted to the arm. See "Damping Plate Mounting Details" on standard sheet, MA-DPD-10.

This visual inspection shall be repeated after each modification of the structure that could affect its aeroelastic response. Excessive vibrations shall not be allowed to continue for more than two days.

Stainless steel bands (or Cables) and cast bracket as in "Astro-Brac", "Sky Bracket" or "Easy Bracket" with 1 ½" Dia Threaded Coupling.

BRACKET ASSEMBLY

GENERAL NOTES:

Design conforms to 1994 AASHTO Standard Specifications for Structural Supports for Highway Signs, Luminaires, and Traffic Signals and Interim Specifications thereto. Design Wind Speed equals 80 mph plus a 1.3 gust factor.

Poles are designed to support one 8'-0" luminaire arm, one 9'-0" internally lighted street name sign and one traffic signal arm with a length as tabulated. The specified luminaire load applied at the end of the luminaire arm equals 60 lbs vertical dead load plus the horizontal wind load on an effective projected area of 1.6 sq ft. The specified internally lighted street name sign load applied 4.5 ft from the centerline of the pole equals 85 lbs vertical dead load plus horizontal wind load on an effective projected area of 11.5 sq ft. The specified signal load applied at the end of the traffic signal arm equals 180 lbs vertical dead load plus the horizontal wind load on an effective projected area of 32.4 sq ft (actual area times drag coefficient).

See Standard Sheet "MA-D" for pole details, "MA-C" for traffic signal arm connection details, "MA-C (ILSN)" for internally lighted street name sign arm connection details, "LUM-A" for luminaire arm and connection details, "SNS" for internally lighted street name sign details, and "TS-FD" for anchor bolt and foundation details. See "MA-C" for material specifications.

Fabrication shall be in accordance with Item 686, "Traffic Signal Pole Assemblies (Steel)" and with the details, dimensions, and weld procedures shown herein. Weld references call for preapproved weld procedures which the Fabricator must obtain prior to fabrication. Materials, fabrication tolerances, and shipping practices shall meet the requirements of this sheet and Item 686, "Traffic Signal Pole Assemblies (Steel)".

Unless otherwise noted, all parts shall be galvanized in accordance with Item 445, "Galvanizing", after fabrication.

Deviation from the details and dimensions shown herein require submission of shop drawings in accordance with Item 441, "Steel Structures". Alternate designs are not acceptable.

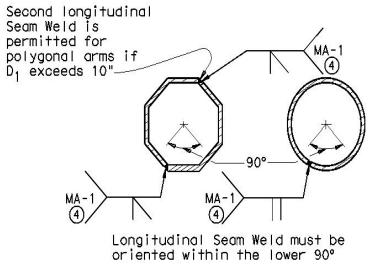

ARM WELD DETAIL

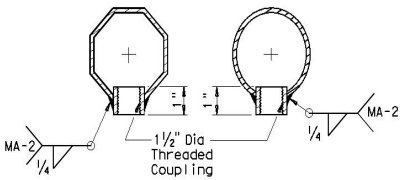

ARM COUPLING DETAILS

④ 60% Min. penetration 100% pemetration within 6" of circumferential base welds.

Texas Department of Transportation
Traffic Operations Division

TRAFFIC SIGNAL SUPPORT STRUCTURES

SINGLE MAST ARM ASSEMBLY

(80 MPH WIND ZONE)

SMA-80(2)-12

© TxDOT August 1995

DN: MS	CK: JSY	DW: VMF	CK: JSY
REVISIONS	CONT	SECT	JOB	HIGHWAY
5-96				
1-12				
	DIST	COUNTY		SHEET NO.
				17

122B

DATE:
FILE:

DISCLAIMER:
The use of this standard is governed by the "Texas Engineering Practice Act". No warranty of any kind is made by TxDOT for any purpose whatsoever. TxDOT assumes no responsibility for the conversion of this standard to other formats or for incorrect results or damages resulting from its use.

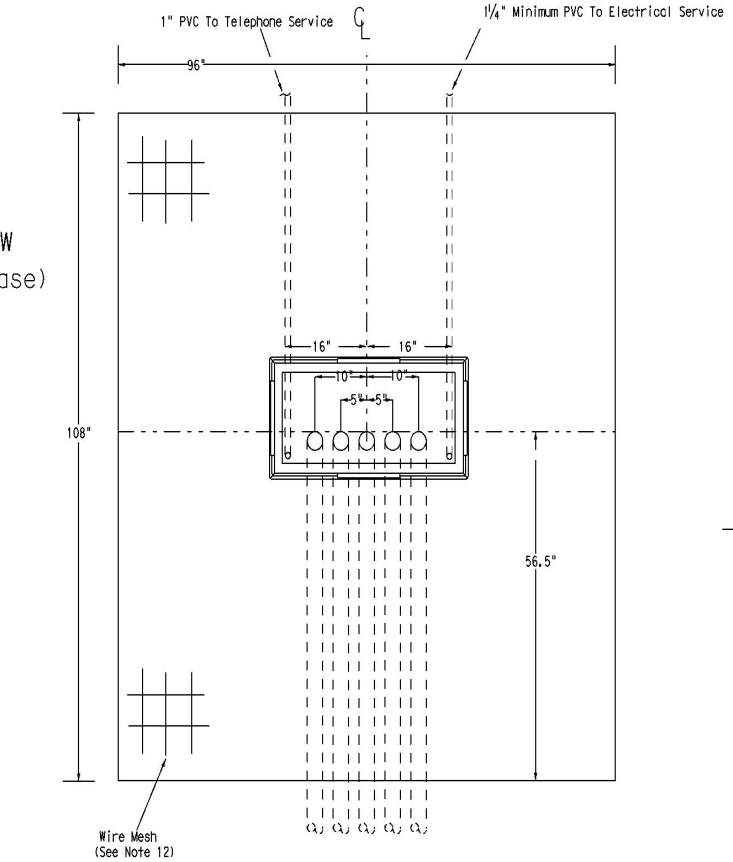

TOP VIEW
(Slab & Base)

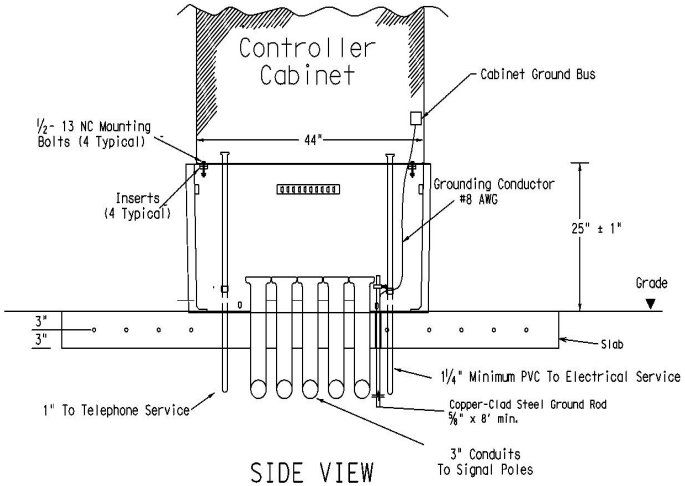

SIDE VIEW
(Slab & Base)

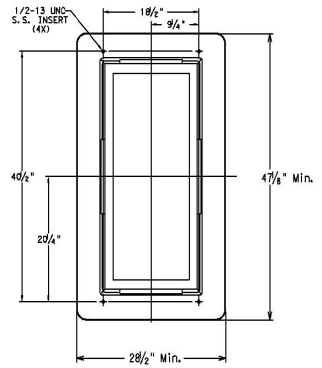

CABINET BASE

TRAFFIC SIGNAL CONTROLLER BASE:

1. Provide a traffic signal controller base (cabinet base) manufactured of polymer concrete material consisting of calcareous and siliceous stone; glass fibers and thermoset polyester resin. The polymer concrete cabinet base must be reinforced on the inside of the cabinet base with fiberglass matting. Provide one of the following bases: Armorcast Part # A6001848X24, Quazite Model # PG3048Z709, or other as approved by TxDOT Traffic Operation Division.
2. The polymer concrete material must have a minimum compressive strength of 10,300 pounds per square inch (psi), minimum flexural strength of 3600 psi, and minimum shear strength of 3600 psi.
3. The polymer concrete cabinet base must conform to the dimensions shown and must accommodate a standard TxDOT basemount cabinet.
4. Supply the cabinet base with four ½"-13 UNC stainless steel inserts for attachment of the cabinet to the base. Inserts must withstand a minimum torque of 50 ft-lb and a minimum straight pull out strength of 750 lbs.
5. Provide the cabinet base with 4 cable racks mounted one on each side of the base 2" to 7 " from the top edge of the base. Unless approved otherwise, cable racks must be 1-1/2 x ⅜ x ⅜ inch steel channel with eight T-slots spaced at 1-1/2 inches. The cable racks must easily accommodate the insertion of tie wraps to attach field wiring to the racks to serve as strain relief. Secure cable racks to the base using ½"-13 UNC stainless steel screws and inserts.
6. The cabinet base, when secured to the concrete slab with controller cabinet attached, must withstand a minimum wind load of 125 mph or a 850 lb force applied at 49" above the bottom of the base without causing the base or cabinet to come out of their anchored position or cause any permanent deformation. The manufacturer must supply certification by an independent testing laboratory or sealed by a Texas Licensed Professional Engineer. Provide the cabinet base with hardware for attachment to a concrete slab.
7. The traffic signal base must be permanently marked either by impress or by permanent ink with the manufacturer's model number and name or logo.
8. Seal the base to the concrete with a silicone caulk bead and fastened to the slab per manufacturer's instructions.

CONCRETE SLAB:

9. Traffic signal controller pad must be a portland cement concrete slab poured in place, must conform to the dimensions shown, and must be level.
10. Bond a #8 AWG copper ground wire and an 8 ft ground rod bonded to the reinforcing mesh by a suitable UL Listed clamp and terminated to the cabinet grounding bus for the purpose of providing a local ground for the electrical grounding conductor. The electrical grounding conductor specified in Item 680-3.A.4 is required and must be terminated to the cabinet ground bus.
11. Install a PVC sleeve to prevent the ground rod from direct embedment in the slab.
12. Provide welded wire mesh 6X6-W2.9 X W2.9 for reinforcement. Provide joints and splices in the mesh with a minimum 6-inch overlap. Center the mesh between top and bottom and provide a minimum 3 inch cover on the edges.
13. Provide Class B concrete minimum for the slab in accordance with Item 421. Construct the slab in accordance with Item 531.

CONDUITS:

14. Stub up and run 3-inch conduits through the slab to the various traffic signal poles and ground boxes as shown on the layouts. Install the number of conduits as shown on layouts plus two additional 3 inch conduits for future use. Terminate the conduits with a bushing between 2 and 4-inches above the slab.
15. Extend conduits for future use at least 18-inches from the edge of the slab, terminate underground with a coupling, and cap and seal so that the seal can be removed without damaging the coupling. This must also apply to unused telephone conduit.
16. Stub up two separate conduits through the slab from the electrical and telephone services. Run the conduit for the electrical feed directly to the electrical service enclosure. Run the conduit for the telephone line directly to the telephone service, usually located on the same pole as the electrical service. Telephone must not under any circumstance share a conduit with any other function.
17. Terminate electric and telephone conduits above the slab with a coupling. After the base is installed, extend the conduits above the top of the base and secure to the base using a steel one-hole strap or similar suitable substitute.

CONTROLLER CABINET:

18. Anchor the controller cabinet to the base using four stainless steel 1/2-13 NC bolts.
19. The silicone caulk bead specified in Item 680-3.A must be RTV 133.

PAYMENT:

20. Bid TS-CF as subsidiary to Item 680.

Texas Department of Transportation
Traffic Operations Division

TRAFFIC SIGNAL CONTROLLER CABINET BASE AND PAD

TS-CF-04

PACKET
5.104
July 11, 2023

© TXDOT OCTOBER 2000

DN: TXDOT	CK: TXDOT	DW: TXDOT	CK: TXDOT
CONT	SECT	JOB	HIGHWAY
DIST	COUNTY		SHEET NO.

12-04 REVISIONS

DATE:
FILE:

DISCLAIMER: The use of this standard is governed by the "Texas Engineering Practice Act". No warranty of any kind is made by TxDOT for any purpose whatsoever. TxDOT assumes no responsibility for the conversion of this standard to other formats or for incorrect results or damages resulting from its use.

DATE:
FILE:

FOUNDATION DESIGN TABLE

FDN TYPE	DRILLED SHAFT DIA	REINFORCING STEEL		EMBEDDED DRILLED SHAFT LENGTH-ft ④, ⑤, ⑥			ANCHOR BOLT DESIGN ①				FOUNDATION DESIGN LOAD ②		TYPICAL APPLICATION
		VERT BARS	SPIRAL & PITCH	TEXAS CONE PENETROMETER N blows/ft 10	15	40	ANCHOR BOLT DIA	Fy (ksi)	BOLT CIR DIA	ANCHOR TYPE	MOMENT K-ft	SHEAR Kips	
24-A	24"	4- #5	#2 at 12"	5.7	5.3	4.5	¾"	36	12 ¾"	1	10	1	Pedestal pole, pedestal mounted controller.
30-A	30"	8- #9	#3 at 6"	11.3	10.3	8.0	1 ½"	55	17"	2	87	3	Mast arm assembly. (see Selection Table)
36-A	36"	10- #9	#3 at 6"	13.2	12.0	9.4	1 ¾"	55	19"	2	131	5	Mast arm assembly. (see Selection Table) 30' strain pole with or without luminaire.
36-B	36"	12- #9	#3 at 6"	15.2	13.6	10.4	2"	55	21"	2	190	7	Mast arm assembly. (see Selection Table) Strain pole taller than 30' & strain pole with mast arm
42-A	42"	14- #9	#3 at 6"	17.4	15.6	11.9	2 ¼"	55	23"	2	271	9	Mast arm assembly. (see Selection Table)

NOTES:

① Anchor bolt design develops the foundation capacity given under Foundation Design Loads.

② Foundation Design Loads are the allowable moments and shears at the base of the structure.

③ Foundations may be listed separately or grouped according to similarity of location and type. Quantities are for the Contractor's information only.

④ Field Penetrometer readings at a depth of approximately 3 to 5 feet may be used to adjust shaft lengths.

⑤ If rock is encountered, the Drilled Shaft shall extend a minimum of two diameters into solid rock.

⑥ Decimal lengths in Design Table are to allow interpolation for other penetrometer values. Round to nearest foot for entry into Summary Table.

FOUNDATION SUMMARY TABLE ③

LOCATION IDENTIFICATION	AVG. N BLOW /ft.	FDN TYPE	NO. EA	DRILLED SHAFT LENGTH ⑥ (FEET) 24-A	30-A	36-A	36-B	42-A
P-1	10	36A	1			14		
P-2	10	36A	1			14		
P-3	10	36A	1			14		
P-4	10	24A	1	6				
P-5	10		1			14		
		36A						
TOTAL DRILLED SHAFT LENGTHS				6		56		

FOUNDATION SELECTION TABLE FOR STANDARD MAST ARM PLUS ILSN SUPPORT ASSEMBLIES (ft)

		FDN 30-A	FDN 36-A	FDN 36-B	FDN 42-A
80 MPH DESIGN WIND SPEED	MAX SINGLE ARM LENGTH	32'	48'		
	MAXIMUM DOUBLE ARM LENGTH COMBINATIONS	24' X 24'			
		28' X 28'			
		32' X 28'	32' X 32'		
			36' X 36'		
			40' X 36'		
			44' X 28'	44' X 36'	
100 MPH DESIGN WIND SPEED	MAX SINGLE ARM LENGTH		36'	44'	
	MAXIMUM DOUBLE ARM LENGTH COMBINATIONS		24' X 24'		
			28' X 28'		
			32' X 24'	32' X 32'	
				36' X 36'	
				40' x24'	40' X 36'
					44' x 36'

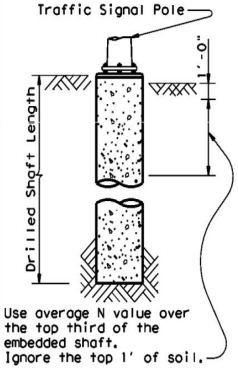

ANCHOR BOLT & TEMPLATE SIZES

BOLT DIA IN.	⑦ BOLT LENGTH	TOP THREAD	BOTTOM THREAD	BOLT CIRCLE	R2	R1
¾"	1'-6"	3"	—	12 ¾"	7 ⅛"	5 ⅝"
1 ½"	3'-4"	6"	4"	17"	10"	7"
1 ¾"	3'-10"	7"	4 ½"	19"	11 ¼"	7 ¾"
2"	4'-3"	8"	5"	21"	12 ½"	8 ½"
2 ¼"	4'-9"	9"	5 ½"	23"	13 ¾"	9 ¼"

⑦ Min dimensions given, longer bolts are acceptable.

EXAMPLE:
1. For 80mph design wind speed, foundation 30-A can support up to a 32' arm with another arm up to 28'
2. For 100mph design wind speed, foundation 36-A can support a single 36' mast arm.

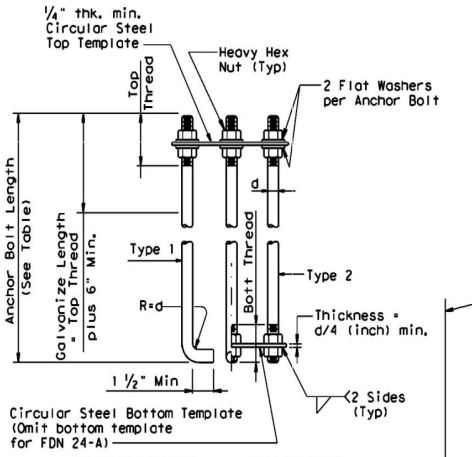

ANCHOR BOLT ASSEMBLY

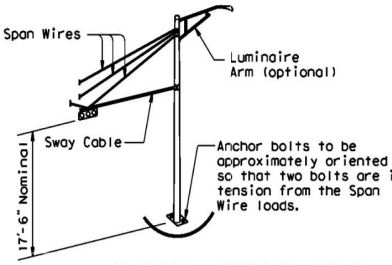

TYPICAL STRAIN POLE ASSEMBLY

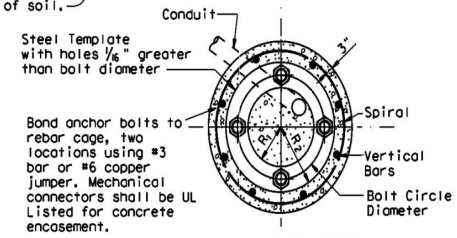

TOP VIEW

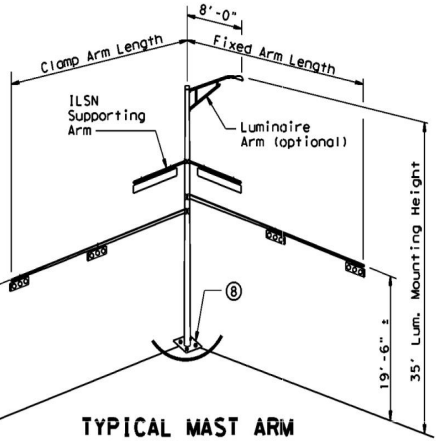

TYPICAL MAST ARM ASSEMBLY

⑧ Orient anchor bolts orthogonal with the fixed arm direction to ensure that two bolts are in tension under dead load.

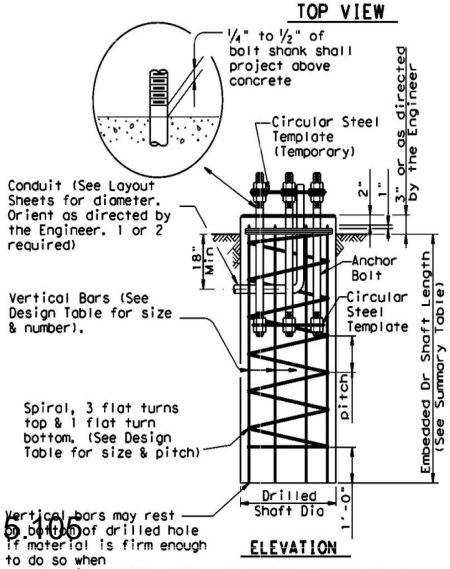

ELEVATION

FOUNDATION DETAILS

GENERAL NOTES:

Design conforms to 1994 AASHTO Standard Specifications for Structural Supports for Highway Signs, Luminaires and Traffic Signals and interim revisions thereto.

Reinforcing steel shall conform to Item 440, "Reinforcing Steel".

Concrete shall be Class "C".

Threads for anchor bolts and nuts shall be rolled or cut threads of 8UN series up to 2" in diameter or UNC series for all sizes. Bolts and nuts shall have Class 2A and 2B fit tolerances. Galvanized nuts shall be tapped after galvanizing.

Anchor bolts that are larger than 1" in diameter shall conform to "alloy steel" or "medium-strength mild steel" per Item 449, "Anchor Bolts". Anchor bolts that are 1" in diameter or less shall conform to ASTM A36. Galvanize a minimum of the top end thread length plus 6" for all anchor bolts unless otherwise noted. Exposed washers and exposed nuts shall be galvanized. All galvanizing shall be in accordance with Item 445, "Galvanizing".

Templates and embedded nuts need not be galvanized. Lubricate and tighten anchor bolts when erecting the structure in accordance with Item 449, "Anchor Bolts".

11-22-19

Texas Department of Transportation
Traffic Operations Division

TRAFFIC SIGNAL POLE FOUNDATION

TS-FD-12

PACKET 105 July 11, 2023

©TxDOT August 1995

DN: MS	CK: JSY	DW: MAO/MMF	CK: JSY/TEB
REVISIONS 5-96 11-98 1-12	CONT	SECT	JOB	HIGHWAY
	DIST	COUNTY	SHEET NO. 19

128

DISCLAIMER:
The use of this standard is governed by the "Texas Engineering Practice Act". No warranty of any kind is made by TxDOT for any purpose whatsoever. TxDOT assumes no responsibility for the conversion of this standard to other formats or for incorrect results or damages resulting from its use.

DATE:
FILE:

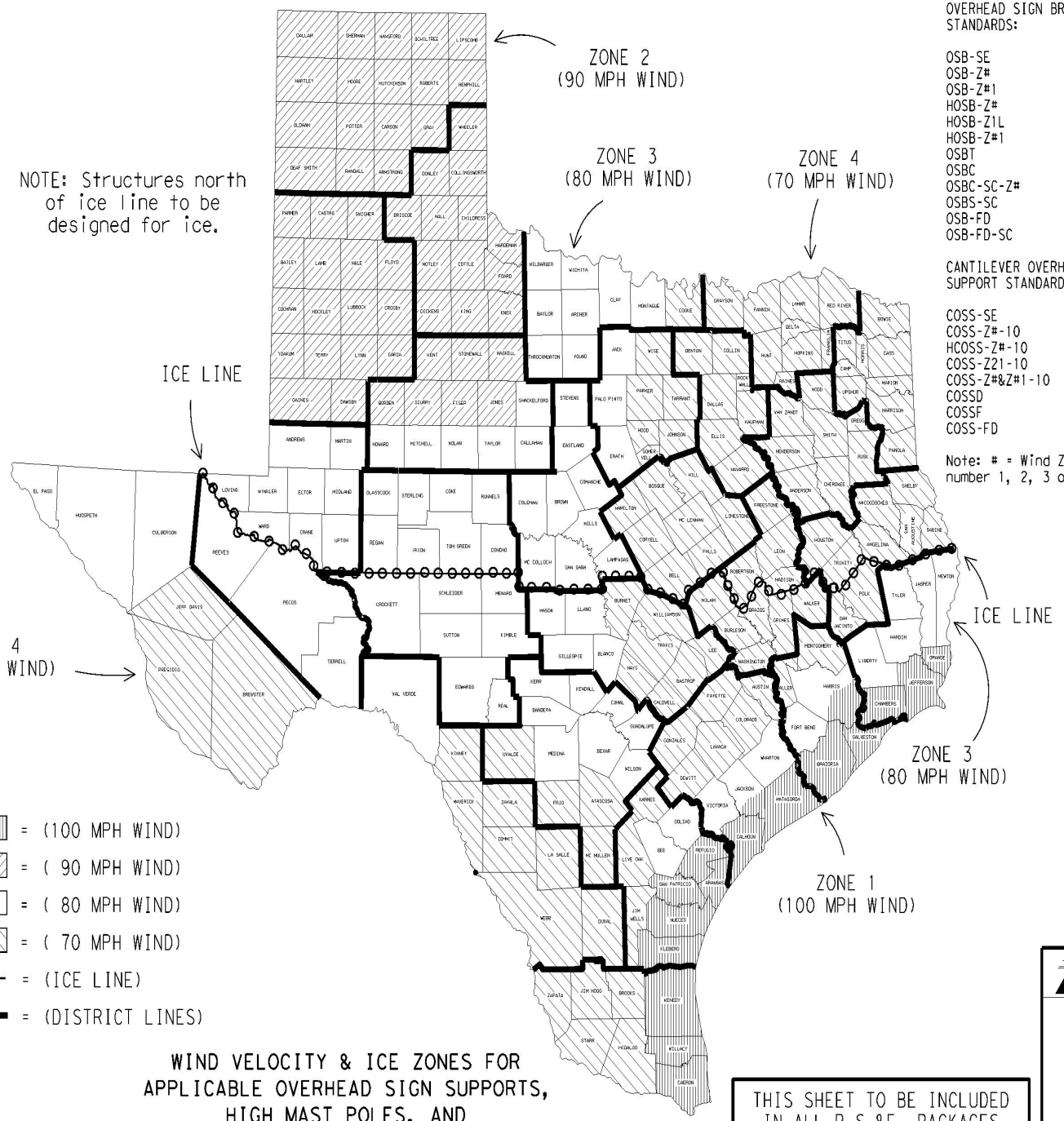

LEGEND

ZONE 1 - = (100 MPH WIND)
ZONE 2 - = (90 MPH WIND)
ZONE 3 - = (80 MPH WIND)
ZONE 4 - = (70 MPH WIND)
= (ICE LINE)
= (DISTRICT LINES)

APPLICABLE STANDARDS SHEETS

OVERHEAD SIGN BRIDGE STANDARDS:

OSB-SE
OSB-Z#
OSB-Z#1
HOSB-Z#
HOSB-Z1L
HOSB-Z#1
OSBT
OSBC
OSBC-SC-Z#
OSBS-SC
OSB-FD
OSB-FD-SC

CANTILEVER OVERHEAD SIGN SUPPORT STANDARDS:

COSS-SE
COSS-Z#-10
HCOSS-Z#-10
COSS-Z21-10
COSS-Z#&Z#1-10
COSSD
COSSF
COSS-FD

Note: # = Wind Zone number 1, 2, 3 or 4

HIGH MAST ILLUMINATION POLE STANDARDS:

HMIP-98
HMIF-98

WALKWAYS AND BRACKETS STANDARDS:

SWW
SB(SWL-1)

TRAFFIC SIGNAL POLE STANDARDS:

SP-80
SP-100
SMA-80
SMA-100
DMA-80
DMA-100
MA-C
MAC(ILSN)
MAD-D
TS-FD
LUM-A
CFA
LMA
TS-C
MA-DPD

FOR HARRIS CO. ONLY
Zone line is just North of US 90, around on the North, West and South sides of IH 610 and down the West side of SH 288.

FOR JACKSON CO. ONLY
Zone line is just North of SH 616.

WIND VELOCITY & ICE ZONES FOR APPLICABLE OVERHEAD SIGN SUPPORTS, HIGH MAST POLES, AND TRAFFIC SIGNAL POLES 5.106

Based on 50 Year Mean Recurrence Interval of Fastest Mile Wind Velocity at 33 feet height.

THIS SHEET TO BE INCLUDED IN ALL P.S.&E. PACKAGES CONTAINING ONE OR MORE OF THE APPLICABLE STANDARD SHEETS LISTED HEREON

PACKET

Texas Department of Transportation | Traffic Operations Division Standard

WIND VELOCITY AND ICE ZONES

WV & IZ-14

July 11, 2023

FILE:	wiadesign	DN: TxDOT	CK: TxDOT	DW: TxDOT	CK: TxDOT
©TxDOT April 1996		CONT	SECT	JOB	HIGHWAY
REVISIONS					
8-14-Added list of applicable standards, restricting use to structures designed for Fastest Mile wind speeds.		DIST	COUNTY		SHEET NO.
					20

30

DISCLAIMER:
The use of this standard is governed by the "Texas Engineering Practice Act". No warranty of any kind is made by TxDOT for any purpose whatsoever. TxDOT assumes no responsibility for the conversion of this standard to other formats or for incorrect results or damages resulting from its use.

DATE:
FILE:

GENERAL NOTES FOR ALL ELECTRICAL WORK

1. The location of all conduits, junction boxes, ground boxes, and electrical services is diagrammatic and may be shifted to accommodate field conditions.

2. Provide new and unused materials. Ensure that all materials and installations comply with the applicable articles of the National Electrical Code (NEC), TxDOT standards and specifications, National Electrical Manufacturers Association (NEMA), and are listed by Underwriters Laboratories (UL) or a Nationally Recognized Testing Lab (NRTL). NRTLs such as Canadian Standard Association (CSA), Intertek Testing Services NA Inc., or FM Approvals LLC can be considered equivalent to UL. Where reference is made to NEMA listed devices, International Electrotechnical Commission (IEC) listed devices will not be considered an acceptable equal to a NEMA listed device. Acceptable devices may have both a NEMA and IEC listing. Faulty fabrication or poor workmanship in any material, equipment, or installation is justification for rejection. Replace or reinstall rejected material or equipment at no additional cost to the Department.

3. Miscellaneous nuts, bolts and hardware, except for high strength bolts, may be stainless steel when plans specify galvanized, provided the bolt size is ½ in. or less in diameter.

4. Provide the following test equipment as required by the Engineer to confirm compliance with the contract and the NEC: voltmeter, ammeter, megohm meter (1000 volt DC), ground resistance tester, torque wrenches, and torque screwdrivers. Ensure all equipment has been properly calibrated within the last year. Provide calibration certification to the Engineer upon request. Operate test equipment during inspection as requested by the Engineer.

5. Install grounding as shown on the plans and in accordance with the NEC. Ensure all metallic conduits; metal poles; luminaires; and metal enclosures are bonded to the equipment grounding conductor. Provide stranded bare copper or green insulated grounding conductors. Ground rods, connectors, and bonding jumpers are subsidiary to the various bid items.

6. When required by the Engineer, notify the Department in writing of materials from the Material Producers List (MPL) intended for use on each project. Prequalified materials are listed on the MPL on TxDOT's website under "Roadway Illumination and Electrical Supplies." No substitutions will be allowed for materials on this list.

CONDUIT

A. MATERIALS

1. Provide conduit, junction boxes, fittings, and hardware as per TxDOT Departmental Material Specification (DMS) 11030 "Conduit" and Item 618 "Conduit" of TxDOT's "Standard Specifications For Construction And Maintenance Of Highways, Streets, And Bridges," latest edition. Provide conduits listed under Item 618 on the MPL under "Roadway Illumination and Electrical Supplies." Provide conduit types according to the descriptive code or as shown on the plans. Do not substitute other types of conduits for those shown. Provide liquidtight flexible metal conduit (LFMC) when flexible conduit is called for on galvanized steel rigid metallic conduit (RMC) systems. Provide liquidtight flexible nonmetallic conduit (LFNC) when flexible conduit is called for on polyvinyl chloride (PVC) systems.

2. Provide galvanized steel RMC for all exposed conduits, unless otherwise shown on the plans. Properly bond all metal conduits.

3. Unless otherwise shown on the plans, provide junction boxes with a minimum size as shown in the following table, which applies to the greatest number of conductors entering the box through one conduit with no more than four conduits per box. When a mixture of conductor sizes is present, count the conductors as if all are of the larger size. For situations not applicable to the table, size junction boxes in accordance with NEC.

AWG	3 CONDUCTORS	5 CONDUCTORS	7 CONDUCTORS
#1	10" x 10" x 4"	12" x 12" x 4"	16" x 16" x 4"
#2	8" x 8" x 4"	10" x 10" x 4"	12" x 12" x 4"
#4	8" x 8" x 4"	10" x 10" x 4"	10" x 10" x 4"
#6	8" x 8" x 4"	8" x 8" x 4"	10" x 10" x 4"
#8	8" x 8" x 4"	8" x 8" x 4"	8" x 8" x 4"

4. Junction boxes with an internal volume of less than 100 cu. in. and supported by entering raceways must have threaded entries or hubs identified for the intended purpose and supported by connection of two or more rigid metal conduits. Secure conduit within 3 ft. of the enclosure or within 18 in. of the enclosure if all conduit entries are on the same side. Mechanically secure all junction boxes with an internal volume greater than 100 cu. inches.

5. Provide hot dipped galvanized cast iron or sand cast aluminum outlet boxes for junction boxes containing only 10 AWG or 12 AWG conductors. Do not use die cast aluminum boxes. Size outlet boxes according to the NEC.

6. Do not use intermediate metal conduit (IMC) or electrical metallic tubing (EMT) unless specifically required by the plan sheets. When EMT is called for, provide junction boxes made from galvanized steel sheeting, listed and approved for outdoor use, unless otherwise noted on the plans. Size all galvanized steel junction boxes in accordance with the NEC. Provide junction boxes for IMC conduit systems that meet the same requirements for junction boxes used with RMC systems.

7. Provide PVC junction boxes intended for outdoor use on PVC conduit systems, unless otherwise noted on the plans.

8. Provide PVC elbows in PVC conduit systems, unless otherwise shown on the plans. Use only a flat, high tensile strength polyester fiber pull tape for pulling conductors through the PVC conduit system. When galvanized steel RMC elbows are specifically called for in the plans and any portion of the RMC elbow is buried less than 18 in., ground the RMC elbow by means of a grounding bushing on a rigid metal extension. Grounding of the rigid metal elbow is not required if the entire RMC elbow is encased in a minimum of 2 in. of concrete. PVC extensions are allowed on these concrete encased rigid metal elbows. RMC or PVC elbows are subsidiary to various bid items.

9. When required, provide High-Density Polyethylene (HDPE) conduit with factory installed internal conductors according to Item 622 "Duct Cable." At the Contractor's request and with approval by the Engineer, substitute HDPE conduit with no conductors for bored schedule 40 or schedule 80 PVC conduit bid under Item 618. Ensure bored HDPE substituted for PVC is schedule 40 and of the same size PVC called for in the plans. Ensure the substituted HDPE meets the requirements of Item 622, except that the conduit is supplied without factory-installed conductors. Make the transition of the HDPE conduit to PVC (or RMC elbow when required) at the bore pit. Provide conduit of the size and schedule as shown on the plans. Do not extend substituted conduit into ground boxes or foundations. Provide PVC or galvanized steel RMC elbows as called for at all ground boxes and foundations.

10. Use two-hole straps when supporting 2 in. and larger conduits. On electrical service poles, properly sized stainless steel or hot dipped galvanized one-hole standoff straps are allowed on the service riser conduit.

B. CONSTRUCTION METHODS

1. Provide and install expansion joint conduit fittings on all structure-mounted conduits at the structure's expansion joints to allow for movement of the conduit. In addition, provide and install expansion joint fittings on all continuous runs of galvanized steel RMC conduit externally exposed on structures such as bridges at maximum intervals of 150 ft. When requested by the project Engineer, supply manufacturer's specification sheet for expansion joint conduit fittings. Repair or replace expansion joint fittings that do not allow for movement at no additional cost to the Department. Provide the method of determining the amount of expansion to the Engineer upon request. Do not use LFMC or LFNC as a substitute for the required expansion conduit fittings.

2. Space all conduit supports at maximum intervals of 5 ft. Install conduit spacers when attaching metal conduit to surface of concrete structures. See "Conduit Mounting Options" on ED(2). Install conduit support within 3 ft. of all enclosures and conduit terminations.

3. Do not attach conduit supports directly to pre-stressed concrete beams except as shown specifically in the plans or as approved by the Engineer.

4. Unless otherwise shown on the plans, jack or bore conduit placed beneath existing roadways, driveways, sidewalks, or after the base or surfacing operation has begun. Backfill and compact the bore pits below the conduit per Item 476 "Jacking, Boring, or Tunneling Pipe or Box" prior to installing conduit or duct cable to prevent bending of the connections.

5. When placing conduit in the sub-grade of new roadways, backfill all trenches with excavated material unless otherwise noted on the plans. When placing conduit in the sub-base of new roadways, backfill all trenches with cement-stabilized base as per requirements of Items 110 "Excavation", 400 "Excavation and Backfill for Structures", 401 "Flowable Backfill", 402 "Trench Excavation Protection", and 403 "Temporary Special Shoring."

6. Provide and place warning tape approximately 10 in. above all trenched conduit as per Item 618.

7. During construction, temporarily cap or plug open ends of all conduit and raceways immediately after installation to prevent entry of dirt, debris and animals. Temporary caps constructed of durable duct tape are allowed. Tightly fix the tape to the conduit opening. Clean out the conduit and prove it clear in accordance with Item 618 prior to installing any conductors.

8. Ensure conduit entry into the top of any enclosure is waterproof by installing conduit sealing hubs or using boxes with threaded bosses. This includes surface mounted safety switches, meter cans, service enclosures, auxiliary enclosures and junction boxes. Grounding bushings on water tight sealing hubs are not required.

9. Fit the ends of all PVC conduit terminations with bushings or bell end fittings. Provide and install a grounding type bushing on all metal conduit terminations.

10. Install a bonding jumper from each grounding bushing to the nearest ground rod, grounding lug, or equipment grounding conductor. Ensure all bonding jumpers are the same size as the equipment grounding conductor. Bonding of conduit used as a casing under roadways for duct cable is not required, if the duct extends the full length through the casing.

11. At all electrical services, install a 6 AWG solid copper grounding electrode conductor.

12. Place conduits entering ground boxes so that the conduit openings are between 3 in. and 6 in. from the bottom of the box. See the ground box detail on sheet ED(4).

13. Seal ends of all conduits with duct seal, expandable foam, or by other methods approved by the Engineer. Seal conduit immediately after completion of conductor installation and pull tests. Do not use duct tape as a permanent conduit sealant. Do not use silicone caulk as a conduit sealant.

14. File smooth the cut ends of all mounting strut and conduit. Before installing, paint the field cut ends of all mounting strut and RMC (threaded or non-threaded) with zinc rich paint (94% or more zinc content) to alleviate overspray. Use zinc rich paint to touch up galvanized material as allowed under Item 445 "Galvanizing." Do not paint non-galvanized material with a zinc rich paint as an alternative for materials required to be galvanized.

Texas Department of Transportation

Traffic Operations Division Standard

ELECTRICAL DETAILS CONDUITS & NOTES

ED(1)-14

FILE: ed1-14.dgn	DN:	CK:	DW:	CK:
©TxDOT October 2014	CONT	SECT	JOB	HIGHWAY
REVISIONS				
	DIST	COUNTY		SHEET NO.
				21

71A

DISCLAIMER:
The use of this standard is governed by the "Texas Engineering Practice Act". No warranty of any kind is made by TxDOT for any purpose whatsoever. TxDOT assumes no responsibility for the conversion of this standard to other formats or for incorrect results or damages resulting from its use.

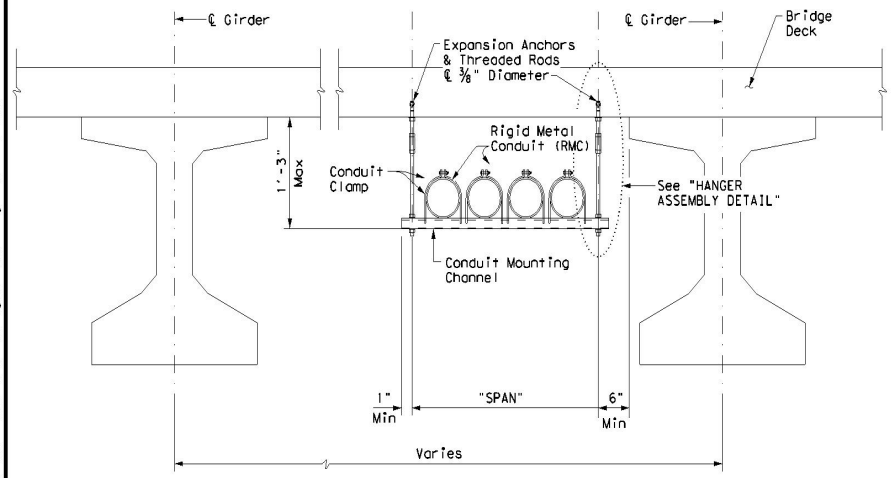

CONDUIT HANGING DETAIL

CONDUIT MOUNTING CHANNEL		
"SPAN"	"W" x "H"	"T"
less than 2'	1 ⅝" x 1 ⅜"	12 Ga.
2'-0" to 2'-6"	1 ⅝" x 1 ⅝"	12 Ga.
>2'-6" to 3'-0"	1 ⅝" x 2 7/16"	12 Ga.

Channels with round or short slotted hole patterns are allowed, if the load carrying capacity is not reduced by more than 15%.

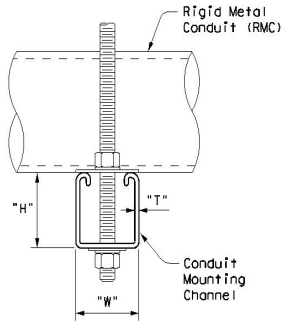

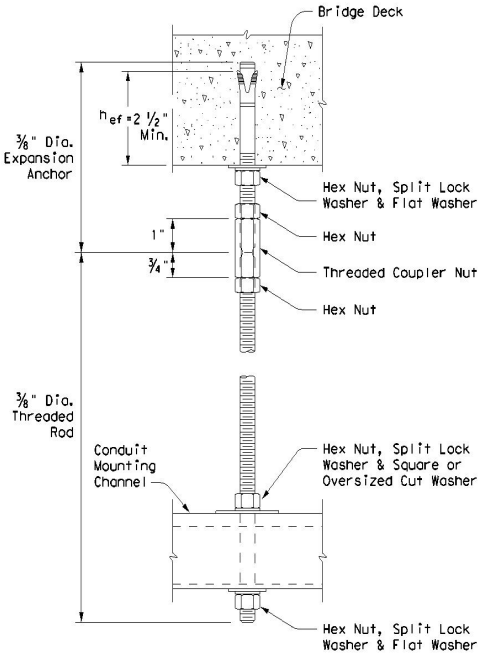

HANGER ASSEMBLY DETAIL

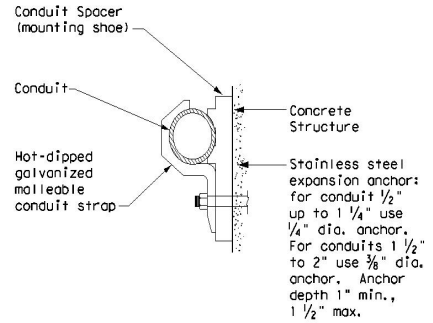

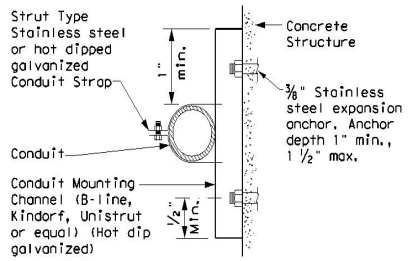

CONDUIT MOUNTING OPTIONS

Attachment to concrete surfaces
See ED(1)B.2

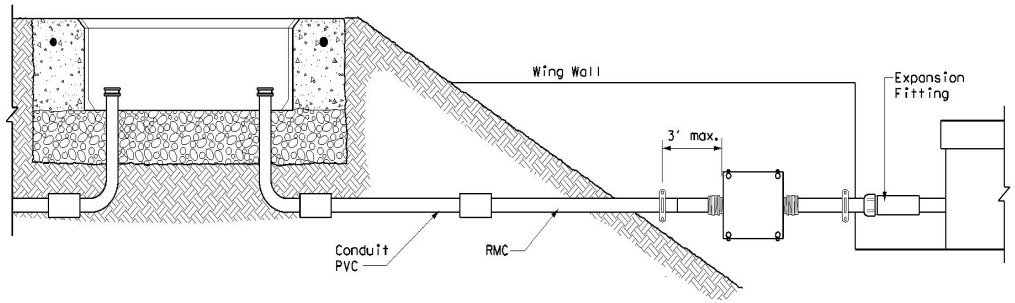

TYPICAL CONDUIT ENTRY TO BRIDGE STRUCTURE DETAIL

EXPANSION ANCHOR NOTES FOR BRIDGE DECK ATTACHMENT

1. Use torque controlled mechanical expansion anchors that are approved for use in cracked concrete by the International Code Council, Evaluation Service (ICC-ES). The chosen anchor product shall have a designated ICC-ES Evaluation Report number, and its approval status shall be maintained on the ICC-ES website under Division 031600 for Concrete Anchors.
2. Unless otherwise approved by the Engineer: do not use adhesive anchors; do not use expansion anchors that are not included in the ICC-ES approval list; and do not use expansion anchors that are only approved for use in uncracked concrete.
3. Use anchors manufactured with stainless steel expansion wedges. Anchors manufactured with carbon steel expansion wedges are not allowed. Anchor bodies can be either zinc-plated carbon steel or stainless steel. For application in marine environment, both the anchor body and expansion wedge shall be stainless steel.
4. Install anchors as shown on the plans and in accordance with the anchor manufacturer's published installation instructions. Arrange a field demonstration test to evaluate the procedures and tools. The test shall be witnessed and approved by the Engineer prior to furnishing anchors on the structure.
5. Prior to hole drilling, use rebar locator to ensure clearing of existing deck strands or reinforcement. Install anchors to ensure a minimum effective embedment depth, (h_{ef}), as shown. Increase (h_{ef})as needed to ensure sufficient thread length for proper torqueing and tightening of anchors.
6. Use anchors of minimum 1600 Lbs tensile capacity (minimum of steel, concrete breakout, and concrete pullout strengths as determined by ACI 318 Appendix D) at the required minimum embedment depth (h_{ef}). No lateral loads shall be introduced after conduit installation.

Texas Department of Transportation

Traffic Operations Division Standard

ELECTRICAL DETAILS
CONDUIT SUPPORTS

ED(2)-14

FILE: ed2x14.dgn	DN: TxDOT	CK: TxDOT	DW: TxDOT	CK: TxDOT
©TxDOT October 2014	CONT	SECT	JOB	HIGHWAY
REVISIONS	DIST	COUNTY		SHEET NO.
				22

DATE:
FILE:

DISCLAIMER:
The use of this standard is governed by the "Texas Engineering Practice Act". No warranty of any kind is made by TxDOT for any purpose whatsoever. TxDOT assumes no responsibility for the conversion of this standard to other formats or for incorrect results or damages resulting from its use.

DATE:
FILE:

ELECTRICAL CONDUCTORS

A. MATERIAL INFORMATION

1. Provide Type XHHW insulated conductors in accordance with Departmental Material Specification (DMS)11040 "Conductors" and Item 620 "Electrical Conductors." Provide conductors as listed on the Material Producers List (MPL) on the Department web site under "Roadway Illumination and Electrical Supplies" Item 620. Color code insulated conductors in conformance with the NEC. Identify grounded (neutral) conductors with white insulation. Identify grounding conductors (ground wires) with green insulation or bare conductors. Identify ungrounded (hot) conductors with any color insulation except green, white, or gray. Keep color scheme consistent throughout the wiring system. Identify conductors 6 American Wire Gauge (AWG) and smaller by continuous color jacket. Identify electrical conductors 4 AWG and larger by continuous color jacket or by colored tape. When identifying conductors with colored tape, mark at least 6 in. of the conductor's insulation with half laps of tape.
2. Provide a solid copper 6 AWG grounding electrode conductor to bond the electrical service equipment to the concrete encased grounding electrode or the ground rod at the service location. Connect the grounding electrode conductor to the ground rod with a UL listed connector in accordance with DMS 11040. Connect the grounding electrode conductor to the concrete encased grounding electrode as shown in the plans.
3. Where two or more circuits are present in one conduit or enclosure, permanently identify the conductors of each branch circuit by attaching a non-metallic tag around both circuit conductors at each accessible location. Provide tags with two straps, large enough to indicate circuit number, letter, or other identification as shown in the plans. Print circuit identification on the tag with a permanent marker.
4. Use listed compression or screw type pressure connectors, terminal blocks, or split bolt connectors for splicing as specified in DMS 11040. Use hot melt adhesive tape to fill the gap and seal the ends of heat shrink tubing. Provide UL listed gel-filled insulating splice covers. Splicing materials, insulating materials, breakaway disconnects, splice covers, and fuse holders are subsidiary to various bid items.

B. CONSTRUCTION METHODS

1. Use only a flat, high tensile strength polyester fiber pull tape for pulling conductors through the conduit system. After installing conductors in conduit, perform conductor pull test. If a conductor cannot be freely pulled, make any needed alterations or repairs at no additional cost to the department. Perform insulation resistance tests in accordance with Item 620. Coordinate with the Engineer to witness the tests.
2. Leave 2 ft. minimum, 3 ft. maximum length for each conductor up to the splice in ground boxes. Leave 3 ft. minimum, 4 ft. maximum length of conductor in ground boxes when pulled through with no splice. Leave 1 ft. minimum, 1.5 ft. maximum length of conductor at enclosures, weatherheads and pole bases.
3. Make splices only in junction boxes, ground boxes, pole bases, or electrical enclosures and use only listed compression or screw type pressure connectors, terminal blocks, or split bolt connectors. Insulate splices with heavy wall heat shrink tubing or gel-filled insulating splice covers to provide a watertight splice. Overlap conductor insulation with heat shrink tubing a minimum of 2 in. past both sides of the splice. Where heat shrink tubing may not shrink sufficiently to provide a watertight seal around the individual conductors, prior to heating the tubing, increase the diameter of the conductor insulation using hot melt adhesive tape to provide a watertight seal between the individual conductors and the heat shrink tubing. Ensure the tape extends past the heat shrink tubing. Use hot melt adhesive tape to fill the gap and seal the ends of heat shrink tubing. Heat shrink tubing that appears to have been burned, or overheated, is considered defective and must be replaced.
4. Size and install gel-filled insulating splice covers according to manufacturer's specifications when used in place of heat shrink tubing.
5. Wire nuts with factory applied waterproof sealant may be used for 8 AWG or smaller conductors in above ground junction boxes, but not in pole bases or ground boxes. Install wire nuts in an upright position to prevent the accumulation of water.
6. Support conductors in illumination poles with a J-hook at the top of the pole.
7. When terminating conductors, remove the insulation and jacketing material without nicking the individual strands of the conductor. Conductors with nicked individual conductor strands or removed strands will be considered damaged.
8. Replace conductors and cables that are damaged beyond repair or that fail an insulation resistance test at no additional cost to the department.
9. Do not repair damaged conductors with duct tape, electrical tape, or wire nuts. Use only approved splicing methods.
10. Do not terminate more than one conductor under a single connector, unless the connector is rated for multiple conductors. Do not exceed the pressure connector's listing for maximum number and size of conductors allowed.
11. Install breakaway connectors on conductors bid under Item 620 whenever those conductors pass through a breakaway support device. Follow manufacturer's instructions when terminating conductors to breakaway connectors. Properly torque threaded connections. Proper terminations are critical to the safe operation of breakaway devices. Use waterproofing boots on breakaway connectors to fit snugly around the conductor to ensure waterproof connection. Only one conductor may enter a single opening in a boot. Provide waterproof boots with the correct number of openings. Leave unused openings factory sealed. Use prequalified breakaway connectors as shown on the MPL.
12. Provide and install a separate stranded equipment grounding conductor (EGC) in all conduits that contain circuit wiring of 50 volts or more. Unless shown elsewhere, size the EGC to be the same size as the largest current carrying conductor contained in the conduit. Ensure all EGCs are bonded together at every accessible location. For traffic signal installations, provide a minimum size 8 AWG EGC. The EGC is paid for under Item 620.

C. TEMPORARY WIRING

1. Install temporary conductors and electrical equipment in accordance with the NEC article "Temporary Installations" and Department standard sheets.
2. Provide a ground fault circuit interrupter (GFCI) for power outlets for portable electrical equipment, power tools, ice machines, ice storage bins and refrigerators located outdoors at grade. GFCI may be any one of the following: molded cord and plug set, receptacle, or circuit breaker type.
3. Use listed wire nuts with factory applied sealant for temporary wiring where approved.
4. Enclose conductor splices within a listed enclosure or ground box, or ensure the splices are more than 10 ft. above grade vertically and more than 5 ft. horizontally from any metal structure. Where installing temporary conductors in areas subject to vehicle traffic or mobile construction equipment, ensure the vertical clearance to ground is at least 18 ft. when measured at the lowest point. Ground messenger wires that support power conductors in conformance with the NEC.
5. Protect and when necessary repair any existing electrical conduits uncovered during the construction process in a timely manner and in conformance with the NEC.

GROUND RODS & GROUNDING ELECTRODES

A. MATERIAL INFORMATION

1. Provide and install a grounding electrode at electrical services. Provide ground rods according to DMS 11040 and the plans. Larger diameter or longer length rods may be called for in some specific locations, see the individual plans sheets. Concrete encased grounding electrodes may be called for in specific locations including electrical service, see individual plan sheets.

B. CONSTRUCTION METHODS

1. Furnish auxiliary ground rods for lightning protection and install in soil, concrete, or both, as called for in the plans. For ground rods installed in concrete, ensure the connection of the conductor to the ground rod is readily accessible for inspection or repairs. For ground rods installed in soil, ensure that the upper end is between 2 to 4 in. below finished grade.
2. Do not place ground rods in the same drilled hole as a timber pole.
3. Install ground rods so the imprinted part number is at the upper end of the rod.
4. Remove all non-conductive coatings such as concrete splatter from the rod at the clamp location.
5. Route all conductors as short and straight as possible for connection to lightning protection ground rods. When a bend is required, ensure a minimum radius bend of four inches for these conductors.
6. Unless otherwise called for in the plans, protect grounding electrode conductors with non-metallic conduit. When protecting grounding electrode conductors with metal conduit, provide and install a grounding type bushing and properly sized bonding jumper on each end of the metal conduit.
7. Written authorization is required before installing a ground rod in a horizontal trench for rocky soil or a solid rock bottom.

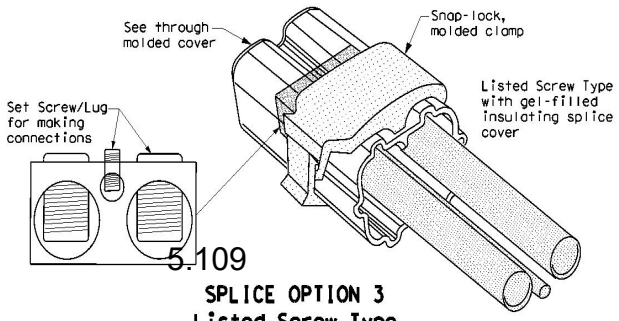

SPLICE OPTION 3
Listed Screw Type

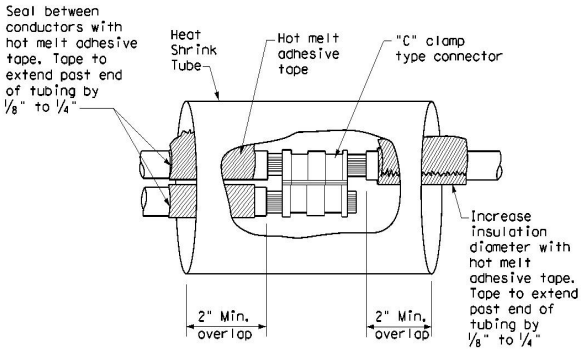

SPLICE OPTION 1
Compression Type

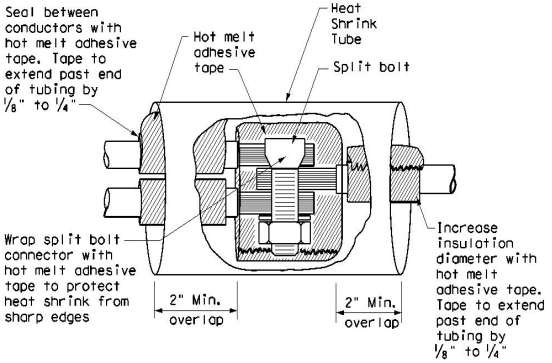

SPLICE OPTION 2
Split Bolt Type

Texas Department of Transportation

Traffic Operations Division Standard

ELECTRICAL DETAILS CONDUCTORS

ED(3)-14

July 11, 2023

FILE: ed314.dgn	DN: TxDOT	CK: TxDOT	DW: TxDOT	CK: TxDOT
©TxDOT October 2014	CONT	SECT	JOB	HIGHWAY
REVISIONS				
	DIST	COUNTY		SHEET NO.
				23

71C

5.109

DISCLAIMER:
The use of this standard is governed by the "Texas Engineering Practice Act". No warranty of any kind is made by TxDOT for any purpose whatsoever. TxDOT assumes no responsibility for the conversion of this standard to other formats or for incorrect results or damages resulting from its use.

DATE:
FILE:

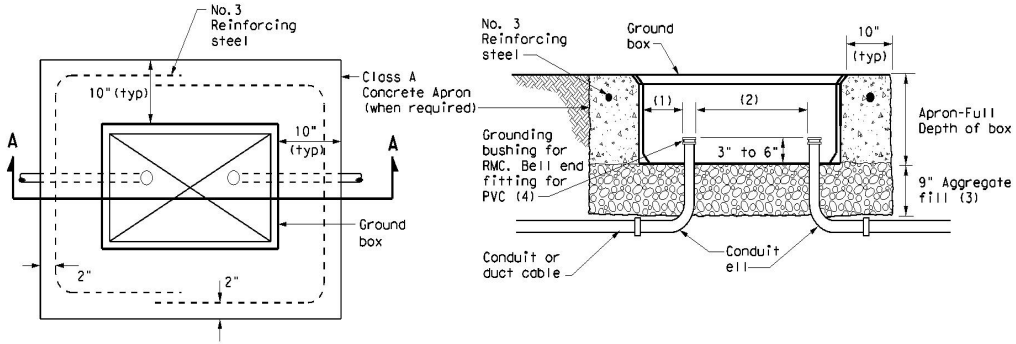

PLAN VIEW

SECTION A - A

APRON FOR GROUND BOX

(1) Uniformly space ends of conduits within the ground box. Position ends of conduits so that ground box walls do not interfere with the installation of grounding bushings or bell end fittings.

(2) Maintain sufficient space between conduits to allow for proper installation of bushing.

(3) Place aggregate under the box, not in the box. Aggregate should not encroach on the interior volume of the box.

(4) Install a grounding bushing on the upper end of all RMC terminating in a ground box. Ground RMC elbows when any part of the elbow is less than 18 in. below the bottom of the ground box. Install a PVC bushing or bell end fitting on the upper end of all PVC conduits terminating in a ground box.

GROUND BOX DIMENSIONS	
TYPE	OUTSIDE DIMENSIONS (INCHES) (Width x Length X Depth)
A	12 X 23 X 11
B	12 X 23 X 22
C	16 X 29 X 11
D	16 X 29 X 22
E	12 X 23 X 17

GROUND BOXES

A. MATERIALS

1. Provide polymer concrete ground boxes measuring 16x30x24 in. (WxLxD) or smaller in accordance with Departmental Material Specification (DMS) 11070 "Ground Boxes" and Item 624 "Ground Boxes."
2. Provide Type A, B, C, D, and E ground boxes as shown in the plans, and as listed on the Material Producers List (MPL) on the Department web site under "Roadway Illumination and Electrical Supplies," Item 624.
3. Ensure ground box cover is correctly labeled in accordance with DMS 11070.
4. Provide larger ground boxes in accordance with Item 624 and as shown in the plans.

B. CONSTRUCTION METHODS

1. Remove all gravel and dirt from conduit. Cap all conduits prior to placing aggregate and setting ground box. Provide Grade 3 or 4 coarse aggregate as shown on Table 2 of Item 302 "Aggregates for Surface Treatments." Ensure aggregate bed is in place and at least 9 inches deep, prior to setting the ground box. Install ground box on top of aggregate.
2. Cast ground box aprons in place. Reinforcing steel may be field bent. Ensure the depth of concrete for the apron extends from finished grade to the top of the aggregate bed under the box. Ground box aprons, including concrete and reinforcing steel, are subsidiary to ground boxes when called for by descriptive code.
3. Keep bolt holes in the box clear of dirt. Bolt covers down when not working in ground boxes.
4. Install all conduits and ells in a neat and workmanlike manner. Uniformly space conduits so grounding bushings and bell end fittings can easily be installed.
5. Temporarily seal all conduits in the ground box until conductors are installed.
6. Permanently seal conduits immediately after the completion of conductor installation and pull tests. Permanently seal the ends of all conduits with duct seal, expandable foam, or other method as approved. Do not use duct tape as a permanent conduit sealant. Do not use silicone caulk as a sealant.
7. When a ground rod is present in a ground box, bond all equipment grounding conductors together and to the ground rod with listed connectors.
8. When a type B or D ground box is stacked to meet volume requirements, it is allowable to cut an appropriately sized hole for conduit entry in the side wall at least 18 inches below grade.
9. If an existing ground box in the contract has a metal cover, bond the cover to the equipment grounding conductor with a 3 ft. long stranded bonding jumper the same size as the grounding conductor. The bonding jumper is subsidiary to various bid items. Verify existing ground boxes with metal covers are shown on the plans, with notes fully describing the work required.
10. If other ground boxes with metal covers are within the project limits but are not part of the contract, the Engineer may direct the Contractor to bond the metal covers, identifying the specific boxes in writing. This work will be paid for separately.
11. Bond metal ground box covers to the grounding conductor with a tank ground type lug.

GROUND BOX COVER DIMENSIONS								
TYPE	DIMENSIONS (INCHES)							
	H	I	J	K	L	M	N	P
A, B & E	23 1/4	23	13 3/4	13 1/2	9 7/8	5 1/8	1 3/8	2
C & D	30 1/2	30 1/4	17 1/2	17 1/4	13 1/4	6 3/4	1 3/8	2

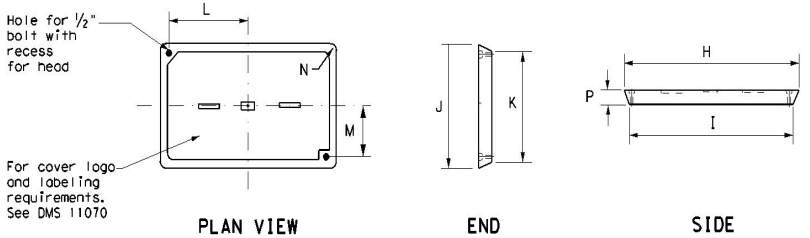

PLAN VIEW

END

SIDE

GROUND BOX COVER

Texas Department of Transportation

Traffic Operations Division Standard

ELECTRICAL DETAILS GROUND BOXES

ED(4)-14

FILE:	ed14.dgn	DN: TxDOT	CK: TxDOT	DW: TxDOT	CK: TxDOT		
©TxDOT October 2014		CONT	SECT	JOB		HIGHWAY	
REVISIONS							
		DIST	COUNTY			SHEET NO.	
						24	

7ID

DISCLAIMER:
The use of this standard is governed by the "Texas Engineering Practice Act". No warranty of any kind is made by TxDOT for any purpose whatsoever. TxDOT assumes no responsibility for the conversion of this standard to other formats or for incorrect results or damages resulting from its use.

DATE:
FILE:

ELECTRICAL SERVICES NOTES

1. Provide new materials. Ensure installation and materials comply with the applicable provisions of the National Electrical Code (NEC) and National Electrical Manufacturers Association (NEMA) standards. Ensure material is Underwriters Laboratories (UL) listed. Provide and install electrical service conduits, conductors, disconnects, contactors, circuit breaker panels, and branch circuit breakers as shown on the Electrical Service Data chart in the plans. Faulty fabrication or poor workmanship in material, equipment, or installation is justification for rejection. Where manufacturers provide warranties and guarantees as a customary trade practice, furnish these to the State.

2. Provide electrical services in accordance with Electrical Details standard sheets, Departmental Material Specification (DMS) 11080 "Electrical Services," DMS 11081 "Electrical Services-Type A," DMS 11082 "Electrical Services-Type C," DMS 11083 "Electrical Services-Type D," DMS 11084 "Electrical Services-Type T," DMS 11085 "Electrical Services-Pedestal (PS)", and Item 628 "Electrical Services" of the Standard Specifications. Provide electrical service types A, C, and D, as listed on the Material Producers List (MPL) on the Department web site under "Roadway Illumination and Electrical Supplies," Item 628. Provide other service types as detailed on the plans.

3. Provide all work, materials, services, and any incidentals needed to install a complete electrical service as specified in the plans.

4. Coordinate with the Engineer and the utility provider for metering and compliance with utility requirements. Primary line extensions, connection charges, meter charges, and other charges by the utility company to provide power to the location are paid for in accordance with Item 628. Get approval for the costs associated with these charges prior to engaging the utility company to do the work. Consult with the utility provider to determine costs and requirements, and coordinate the work as approved.

5. The enclosure manufacturer will provide Master Lock Type 2 with brass tumblers keyed #2195 for all custom electrical enclosures. Installing Contractor is to provide Master Lock #2195 Type 2 with brass tumblers for "off the shelf" enclosures. Master Lock #2195 keys and locks become property of the State. Unless otherwise approved, do not energize electrical service equipment until locks are installed.

6. Enclosures with external disconnects that de-energize all equipment inside the enclosure do not need a dead front trim. Protect incoming line terminations from incidental contact as required by the NEC.

7. When galvanized is specified for nuts, screws, bolts or miscellaneous hardware, stainless steel may be used.

8. Provide wiring and electrical components rated for 75°C. Provide red, black, and white colored XHHW service entrance conductors of minimum size 6 American Wire Gauge (AWG). Identify size 6 AWG conductors by continuous color jacket. Identify electrical conductors sized 4 AWG and larger by continuous color jacket or by colored tape. Mark at least 6 inches of the conductor's insulation with half laps of colored tape, when identifying conductors. Ensure each service entrance conductor exits through a separately bushed non-metallic opening in the weatherhead. The lengths of the conductors outside the weatherhead are to be 12 inches minimum, 18 inches maximum, or as required by utility.

9. All electrical service conduit and conductors attached to the electrical service including the riser or the elbow below ground are subsidiary to the electrical service. For an underground utility feed, all service conduit and conductors after the elbow, including service conduit and conductors for the utility pole riser when furnished by the Contractor, will be paid for separately.

10. Provide rigid metal conduit (RMC) for all conduits on service, except for the ½ in. PVC conduit containing the electrical service grounding electrode conductor. Size the service entrance conduit as shown in the plans. Ensure conduit for branch circuit entry to enclosure is the same size as that shown on the layout sheets for branch circuit conduit. Extend all rigid metal conduits a minimum of 6 inches underground and then couple to the type and schedule of the conduit shown on the layout for that particular branch circuit. Install a grounding bushing on the RMC where it terminates in the service enclosure.

11. Use of liquidtight flexible metal conduit (LFMC) is allowed between the meter and service enclosure when they are mounted 90 to 180 degrees to each other. Size the LFMC the same size as service entrance conduit. LFMC must not exceed 3 feet in length. Strap LFMC within 1 foot of each end. LFMC less than 12 inches in length need not be strapped. Each end of LFMC must have a grounding bushing or be terminated with a grounding fitting. The LFMC must contain a grounded (neutral) conductor. Ensure any bend in LFMC never exceeds 180 degrees. A pull test is required on all installed conductors, with at least six inches of free conductor movement demonstrated to the satisfaction of the Engineer.

12. Ensure all mounting hardware and installation details of services conform to utility company specifications.

13. For all electrical service enclosures listed under Item 628 on the MPL, the UL 508 enclosure manufacturers will prepare and submit a schematic drawing unique to each service. Before shipment to the job site, place the applicable laminated schematic drawings and the laminated plan sheet showing the electrical service data chart used to build the enclosure in the enclosure's data pocket. The installing contractor will copy and laminate the actual project plan sheets detailing all equipment and branch circuits supplied by that service. The laminated plan sheets are to be placed in the service enclosure's document pocket. Reduce 11 in. x 17 in. plan sheets to 8 ½ in. x 11 in. before laminating. If the installation differs from the plan sheets, the installing contractor is to redline plan sheets before laminating.

14. When providing an "Off The Shelf" Type D or Type T service, provide laminated plan sheets detailing equipment and branch circuits supplied by that service. Reduce 11 in. x 17 in. plan sheets to 8 ½ in. x 11 in before laminating. Deliver these drawings before completion of the work to the Engineer, instead of placing in enclosure that has no door pocket.

15. Do not install conduit in the back wall of a service enclosure where it would penetrate the equipment mounting panel inside the enclosure. Provide grounding bushings on all metal conduits, and terminate bonding jumpers to grounding bus. Grounding bushings are not required when the end of the metal conduit is fitted with a conduit sealing hub or threaded boss, such as a meter base hub.

SERVICE ASSEMBLY ENCLOSURE

1. Provide threaded hub for all conduit entries into the top of enclosure.

2. Type galvanized steel (GS) enclosures may be used for Type C panelboards and for Type D and T services that do not use an enclosure mounted photocell or lighting contactor. Provide GS enclosures in accordance with DMS 11080, 11082, 11083, and 11084.

3. Provide aluminum (AL) and stainless steel (SS) enclosures for Types A, C, and D in accordance with DMS 11080, 11081, 11082, 11083, and 11084. Do not paint stainless steel.

4. Provide pedestal service (PS) enclosures in accordance with ED(9) and DMS 11080 and 11085. Do not provide GS pedestal services. If GS is shown in the PS descriptive code, provide an AL enclosure.

MAIN DISCONNECT & BRANCH CIRCUIT BREAKERS

1. Field drill flange-mounted remote operator handle if needed, to ensure handle is lockable in both the "On" and "Off" positions.

2. When the utility company provides a transformer larger than 50 KVA, verify that the available fault current is less than the circuit breaker's ampere interrupting capacity (AIC) rating and provide documentation from the electric utility provider to the Engineer.

PHOTOELECTRIC CONTROL

1. Provide photocell as listed on the MPL. Move, adjust, or shield the photocell from stray or ambient night time light to ensure proper operation. Mount photocell facing north when practical. Mount top of pole photocells as shown on Top Mounted Photocell Detail.

* ELECTRICAL SERVICE DATA

Elec. Service ID	Plan Sheet Number	Electrical Service Description	Service Conduit **Size	Service Conductors No./Size	Safety Switch Amps	Main Ckt. Bkr. Pole/Amps	Two-Pole Contractor Amps	Panelbd/ Loadcenter Amp Rating	Branch Circuit ID	Branch Ckt. Bkr. Pole/Amps	Branch Circuit Amps	KVA Load
SB 183	289	ELC SRV TY A 240/480 100(SS)AL(E)SF(U)	2"	3/#2	100	2P/100	100	N/A	Lighting NB	2P/40	26	28.1
									Lighting SB	2P/40	25	
									Underpass	1P/20	15	
NB Access	30	ELC SRV TY D 120/240 060(NS)SS(E)TS(O)	1 ¼"	3/#6	N/A	2P/60		100	Sig. Controller	1P/30	23	5.3
							30		Luminaires	2P/20	9	
									CCTV	1P/20	3	
2nd & Main	58	ELC SRV TY T 120/240 000(NS)GS(N)SP(O)	1 ¼"	3/#6	N/A	N/A	N/A	70	Flashing Beacon 1	1P/20	4	1.0
									Flashing Beacon 2	1P/20	4	

* Example only, not for construction. All new electrical services must have electrical service data chart specific to that service as shown in the plans.

** Verify service conduit size with utility. Size may change due to utility meter requirements. Ensure conduit size meets the National ELectrical Code.

EXPLANATION OF ELECTRICAL SERVICE DESCRIPTIVE CODE

ELEC SERV TY X XXX/XXX XXX (XX) XX (X) XX (X)

- Schematic Type
- Service Voltage V / V
- Disconnect Amp Rating
  000 indicates main lug only/
  Typically Type T
- (SS)= Safety Switch Ahead of Meter-Check with Utility
- (NS)= No safety Switch Ahead of Meter-Check with Utility
- Enclosure Type
  - GS= Galvanized steel("off the shelf")
  - SS= Stainless steel(Custom Enclosure)See MPL
  - AL= Aluminum (Custom Enclosure)See MPL
- Photocell Mounting Location
  - (E)= Inside Service/Enclosure Mounted
  - (T)= Top of pole
  - (L)= Luminaire mounted
  - (N)= None/No Photocell or Lighting Contactor Required
- Service Support Type
  - GC= Granite concrete
  - OC= Other concrete
  - TP= Timber pole
  - SP= Steel pole
  - SF= Steel frame
  - OT= Pole by others or paid for separately
  - EX= Existing pole
  - TS= Service on traffic signal pole
  - PS= Pedestal Service
- O= Overhead Service Feed from Utility
- U= Underground Service Feed from Utility

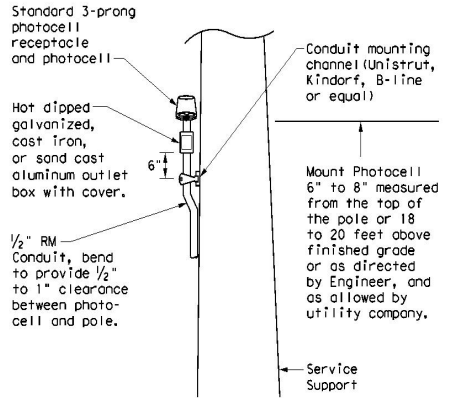

TOP MOUNTED PHOTOCELL

Install conduit strap maximum 3 feet from box. 5 foot maximum spacing between straps supporting conduit.

Texas Department of Transportation

Traffic Operations Division Standard

ELECTRICAL DETAILS SERVICE NOTES & DATA

ED(5)-14

July 11, 2023

FILE: ed5-14.dgn	DN: TxDOT	CK: TxDOT	DW: TxDOT	CK: TxDOT
©TxDOT October 2014	CONT	SECT	JOB	HIGHWAY
REVISIONS				
	DIST	COUNTY		SHEET NO.
				25

71E

PACKET 5111

DISCLAIMER:
The use of this standard is governed by the "Texas Engineering Practice Act". No warranty of any kind is made by TxDOT for any purpose whatsoever. TxDOT assumes no responsibility for the conversion of this standard to other formats or for incorrect results or damages resulting from its use.

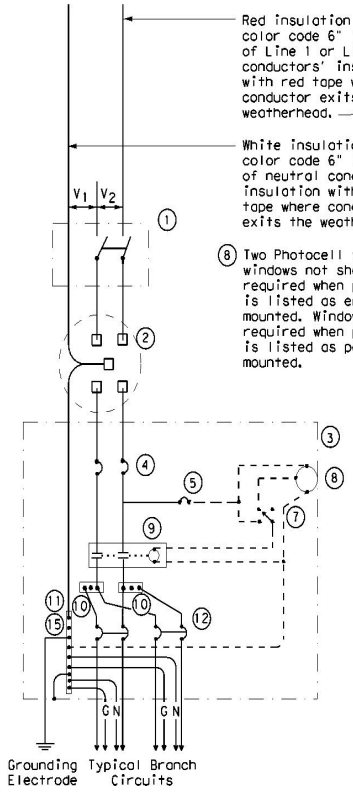

SCHEMATIC TYPE A
THREE WIRE

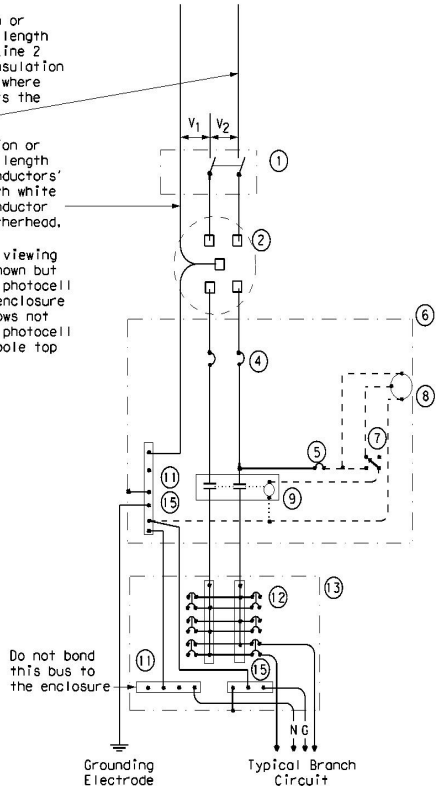

SCHEMATIC TYPE C
THREE WIRE

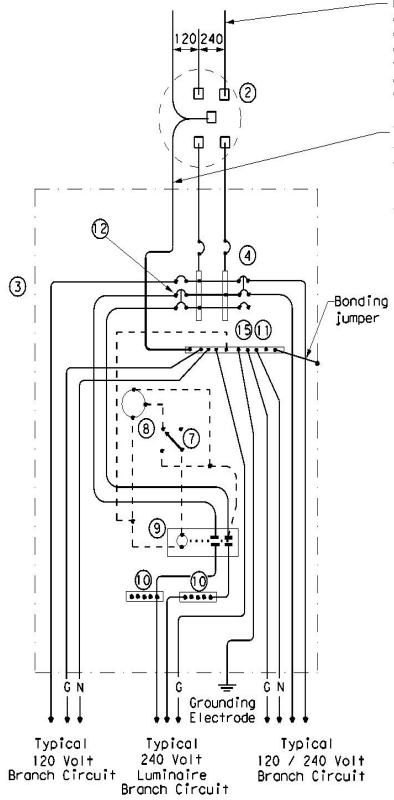

SCHEMATIC TYPE D - CUSTOM
120/240 VOLTS - THREE WIRE

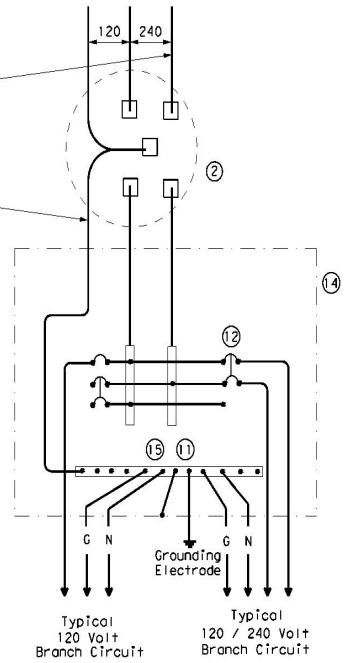

SCHEMATIC TYPE T
120/240 VOLTS - THREE WIRE

Galvanized steel-"Buy Off The Shelf" only. When required install photocell top of the pole or on luminaire only, no lighting contractor will be installed.

WIRING LEGEND	
———	Power Wiring
- - - - -	Control Wiring
—N—	Neutral Conductor
—G—	Equipment grounding conductor-always required

SCHEMATIC LEGEND	
1	Safety Switch (when required)
2	Meter (when required-verify with electric utility provider)
3	Service Assembly Enclosure
4	Main Disconnect Breaker (See Electrical Service Data)
5	Circuit Breaker, 15 Amp (Control Circuit)
6	Auxiliary Enclosure
7	Control Station ("H-O-A" Switch)
8	Photo Electric Control (enclosure-mounted shown)
9	Lighting Contactor
10	Power Distribution Terminal Blocks
11	Neutral Bus
12	Branch Circuit Breaker (See Electrical Service Data)
13	Separate Circuit Breaker Panelboard
14	Load Center
15	Ground Bus

Texas Department of Transportation

Traffic Operations Division Standard

ELECTRICAL DETAILS SERVICE ENCLOSURE AND NOTES

ED(6)-14

FILE: ed6-14.dgn	DN: TxDOT	CK: TxDOT	DW: TxDOT	CK: TxDOT
©TxDOT October 2014	CONT	SECT	JOB	HIGHWAY
REVISIONS				
	DIST	COUNTY		SHEET NO.
				26

71F

DATE:
FILE:

TRAFFIC SIGNAL NOTES

1. Do not pass luminaire conductors through the signal controller cabinet.
2. Include an equipment grounding conductor in all conduits throughout the electrical system. Bond all exposed metal parts to the grounding conductor.
3. Provide roadway luminaires, when required, in accordance with the material and construction sections of Item 610, "Roadway Illumination Assemblies," except for performance testing of luminaires. Test installed roadway luminaires for proper operation as a part of the associated traffic signal system test.
4. If internally illuminated street name signs are approved for use, ground the fixture to the pole with a 12 AWG green XHHW conductor.
5. Bond anchor bolts to rebar cage in two locations using #3 bars or 6 AWG stranded copper conductors. Use listed mechanical connectors rated for embedment in concrete. See TXDOT standard TS-FD for further details.
6. Drill and tap signal poles for ½ in. X 13 UNC tank ground fitting. Provide and install tank ground fitting 4 in. to 6 in. directly below electrical service enclosure. Provide properly sized hole through the bottom of the enclosure for the service grounding electrode conductor. Connect the electrical service grounding electrode conductor to the tank ground fitting. Ensure electrical service grounding electrode conductor is as short and straight as possible from the enclosure to the tank ground fitting. See Inset A detail for further information. Size service entrance conduit and branch circuit conduit as shown in the plans.
7. Mount electrical service enclosure and meter to signal pole with stainless steel bands. Ensure bands are a minimum width of ¾ in. Secure enclosures to bands using two-bolt brackets. Install brackets near top and bottom of each enclosure. Install properly sized stainless steel washers on each bolt in the enclosure. Band or drill and tap properly sized stand-off straps to signal pole for attaching conduit.
8. Conduct pull tests and insulation resistance tests on all illumination and power conductors as required in Item 620 "Electrical Conductors" and ED(3). To prevent electronics damage, do not conduct insulation resistance tests on traffic signal cables after termination.
9. Lock all enclosures and bolt down all ground box covers before applying power to the signal installation.
10. Terminate conduits entering the top of enclosures with a conduit-sealing hub or threaded boss such as meter hub. Install a grounding bushing on all metal conduits not connected to conduit-sealing hub or threaded boss. Bond the grounding bushing to the ground bus with a bonding jumper. Seal all conduits entering enclosures with duct seal or expanding foam. Do not use silicone to seal conduit ends.
11. For all conduits, ensure the burial depth is a minimum of 18". Ensure the minimum burial depth for conduit placed under a roadway is 24".

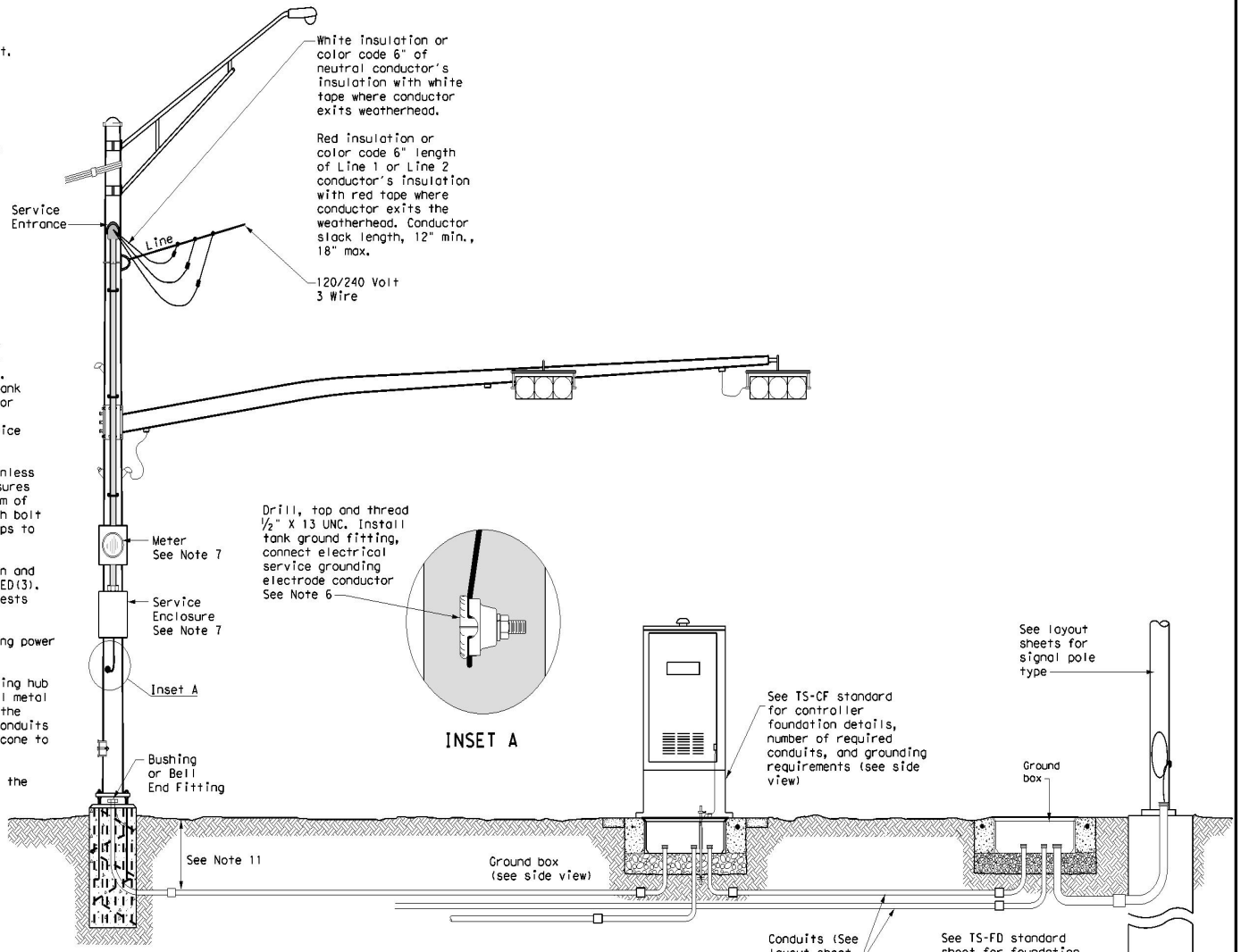

SIGNAL POLE WITH SERVICE

Type T electrical service mounted on signal pole shown as an example. See electrical details, layout sheets, and electrical service data chart for additional details.

SIGNAL CONTROLLER FRONT VIEW

SIGNAL POLE

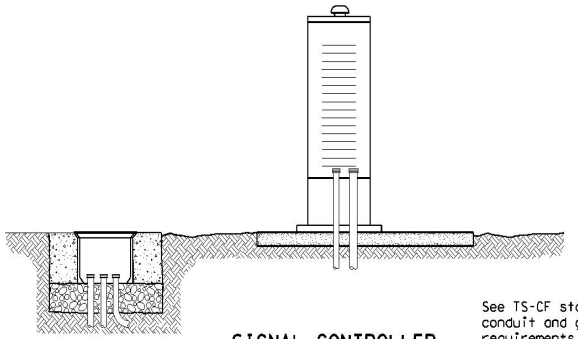

SIGNAL CONTROLLER SIDE VIEW

See TS-CF standard for conduit and grounding requirements. See layout sheets for ground box locations and any additional conduits that are required.

Texas Department of Transportation — Traffic Operations Division Standard

ELECTRICAL DETAILS TYPICAL TRAFFIC SIGNAL SYSTEM DETAILS

ED(8)-14

FILE: ed8-14.dgn	DN: TxDOT	CK: TxDOT	DW: TxDOT	CK: TxDOT			
©TxDOT October 2014	CONT	SECT	JOB	HIGHWAY			
REVISIONS							
	DIST	COUNTY		SHEET NO.			
				27			

71H

DISCLAIMER:
The use of this standard is governed by the "Texas Engineering Practice Act". No warranty of any kind is made by TxDOT for any purpose whatsoever. TxDOT assumes no responsibility for the conversion of this standard to other formats or for incorrect results or damages resulting from its use.

DATE:
FILE:

PEDESTAL SERVICE NOTES

1. Manufacture pedestal electrical services in accordance with Departmental Material Specifications (DMS)11080 "Electrical Services", 11085 "Electrical Services-Pedestal (PS)" and Item 628 "Electrical Services. "Provide pedestal electrical services as listed on the Material Producers list (MPL) on the Department's web site under "Roadway Illumination and Electrical Supplies," Item 628. Ensure all mounting hardware and installation details of services meet utility company specifications. Contact the local utility company for approval of pedestal details prior to installing the electrical pedestal service. Submit any changes required by the utility company prior to manufacturing the pedestal enclosure.

2. When a meter socket is required, provide a socket with a minimum 100 amp rating that complies with local utility requirements.

3. Provide Class A or C concrete for pedestal service foundations in accordance with Item 420, "Concrete Substructures," except that concrete will not be paid for directly but is considered subsidiary to Item 628.

4. Provide #4 reinforcing steel for foundations in accordance with Item 440, "Reinforcement for Concrete."

5. Install ½ in. X 2 1⁄16 in. minimum length concrete single expansion type anchors for mounting pedestal enclosure to foundation. Anchor location to match mounting holes in each corner of enclosure. Secure each of the four corners of the pedestal enclosure to the anchors in the foundation with a ½ in. galvanized or stainless steel machine thread bolt, a properly sized locknut and a flat washer.

6. Finish top of concrete foundation in a neat and workmanlike manner. If leveling washers are used, ensure no more than ⅛ in. gap at any corner. Do not exceed a maximum dip or rise in the foundation of ⅛ in. per foot. When properly installed, ensure the top of the service enclosure is level front to back and side to side within ¼ in. Repair rocking or movement of the service enclosure at no additional cost to the department.

7. Do not use liquidtight flexible metal conduit (LFMC) on pedestal type services.

8. Ensure all elbows in the foundation are sized as per utility provider's conduit requirements for underground conduit and feeders. PVC extensions may be installed provided the ends of the rigid metal conduits are more than 2 in. below the top of the concrete foundation. Where extension conduits are metal, grounding bushings must be installed with a bonding jumper properly terminated.

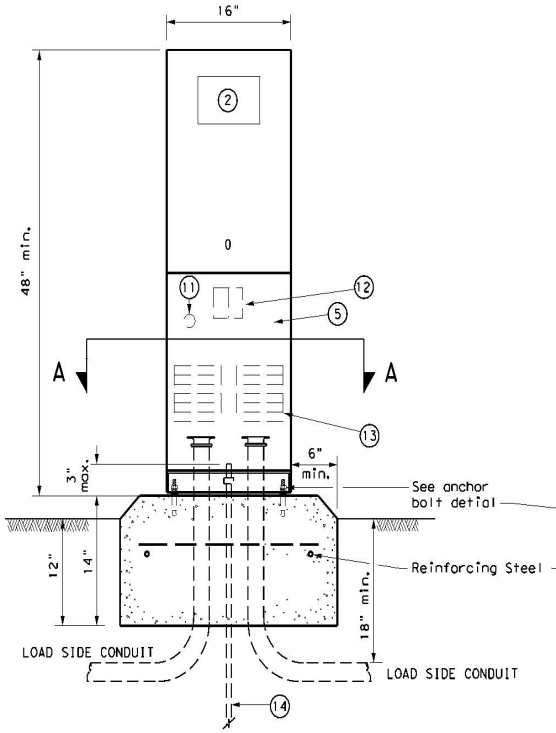

FRONT VIEW

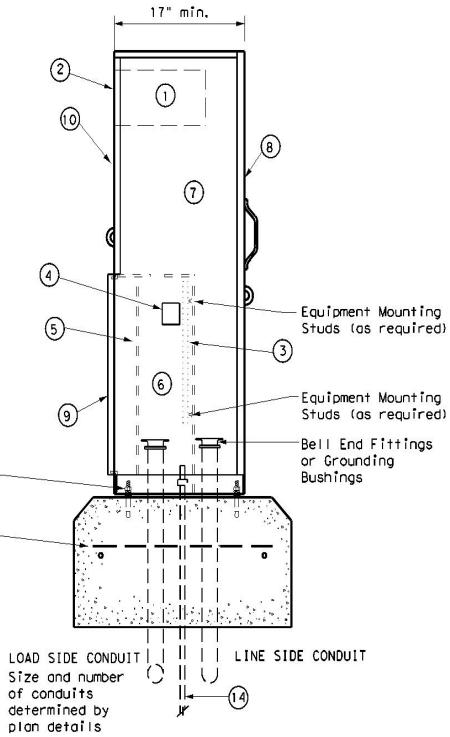

SIDE VIEW

TYPE C shown, TYPE A similar except that TYPE A shall have individual circuit breakers (CB) mounted on an equipment mounting panel. CB Handles shall protrude through hinged deadfront trim.

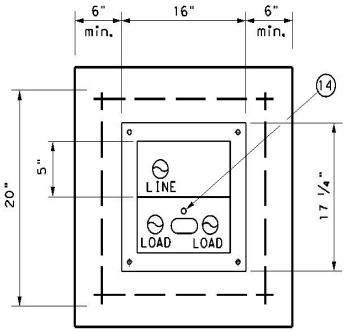

SECTION A-A

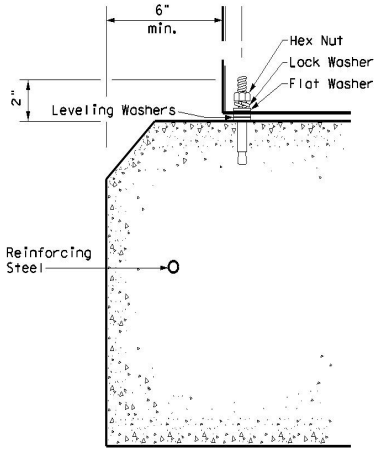

ANCHOR BOLT DETAIL

LEGEND	
1	Meter Socket, (when required)
2	Meter Socket Window, (when required)
3	Equipment Mounting Panel
4	Photo Electric Control Window, (When required)
5	Hinged Deadfront Trim
6	Load Side Conduit Trim
7	Line Side Conduit Area
8	Utility Access Door, with handle
9	Pedestal Door
10	Hinged Meter Access
11	Control Station (H-O-A Switch)
12	Main Disconnect
13	Branch Circuit Breakers
14	Copper Clad Ground Rod - 5/8" X 10'

Texas Department of Transportation

Traffic Operations Division Standard

ELECTRICAL DETAILS
ELECTRICAL SERVICE SUPPORT
PEDESTAL SERVICE TYPE PS

ED(9)-14

July 11, 2023

FILE: ed9-14.dgn	DN: TxDOT	CK: TxDOT	DW: TxDOT	CK: TxDOT
©TxDOT October 2014	CONT	SECT	JOB	HIGHWAY
REVISIONS				
	DIST	COUNTY		SHEET NO.
				28

71J

DISCLAIMER:
The use of this standard is governed by the "Texas Engineering Practice Act". No warranty of any kind is made by TxDOT for any purpose whatsoever. TxDOT assumes no responsibility for the conversion of this standard to other formats or for incorrect results or damages resulting from its use.

DATE:
FILE:

DUCT CABLE & HDPE CONDUIT NOTES

1. Provide duct cable in accordance with Departmental Material Specification (DMS) 11060 "Duct Cable" and Item 622 "Duct Cable." Provide duct cable as listed on the Material Producer List (MPL) on the Department web site under "Roadway Illumination and Electrical Supplies" Item 622.

2. Provide High-Density Polyethylene (HDPE) conduit in accordance with DMS 11060 and Item 618, "Conduit." Provide HDPE as listed on the MPL on the Department web site under "Roadway Illumination and Electrical Supplies," Item 618.

3. Supply duct cable with a minimum 2 in. diameter, unless otherwise shown in the plans. Provide duct cable and HDPE conduit as shown by descriptive code or on the plans. Bend duct cable and HDPE conduit as recommended by the manufacturer, with a minimum bending radius of 26 in. for 2 in. duct. Follow manufacturers' recommendations when handling duct cable and HDPE conduit reels and during installation of duct cable and HDPE conduit.

4. Do not splice conductors within duct cable or HDPE conduit. Couple duct cable and HDPE entering a ground box or foundation to a PVC elbow. When galvanized steel RMC elbows are called for in the plans and any portion of the RMC elbow is buried less than 18" from possible contact, ground the RMC elbow.

5. Furnish and install duct cable with factory installed conductors, sized as shown in the plans and as required by the National Electrical Code (NEC). The NEC contains specific requirements for duct cable in Article, "Nonmetallic Underground Conduit with Conductors: Type NUCC."

6. When conduit casing is called for in the plans, extend duct cable or HDPE conduit through the conduit casing in one continuous length without connection to the casing.

7. Seal the ends of duct cable or HDPE conduit with duct seal, expandable foam, or other approved method after completing the pull tests required by Item 622.

8. Provide minimum cover of 24 in. under roadways, 18 in. in other locations, or as shown on the plans.

9. Furnish and install listed fittings to couple duct cable or HDPE conduit to other types of conduit. Duct cable and HDPE conduit may be field-threaded and spliced with PVC or RMC threaded couplings; connected with listed tie-wrap fittings; connected using listed coupling made of HDPE with stainless steel external banding clamps and locking rings; connected with approved electrofusion conduit couplings; or connected using an approved chemical fusion method using an epoxy or adhesive specifically designed for HDPE couplings and connectors all installed in accordance with their manufacturer's instructions. Do not use PVC glue on HDPE. Do not use water pipe fittings, or connect conduit with heat shrink tubing.

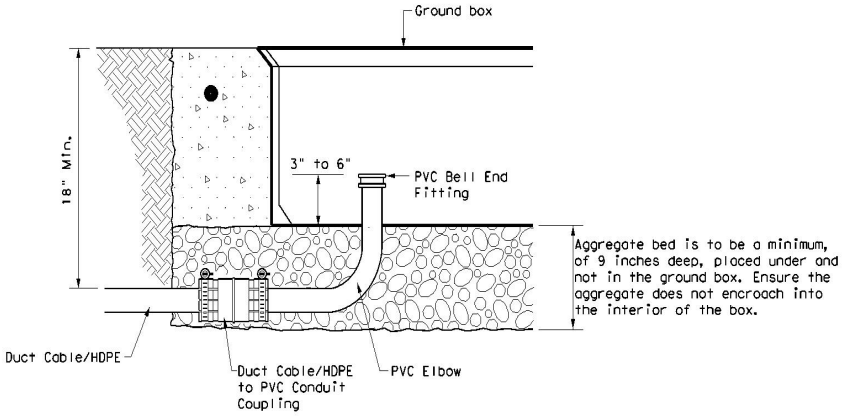

DUCT CABLE/HDPE AT GROUND BOX

When the upper end of an RMC Ell does not enter the ground box, it may be extended with a SCH-40 PVC conduit nipple and bell end, provided there is a minimum of 18" of cover over all parts of the elbow. If not, a rigid extension and ground bushing is required.

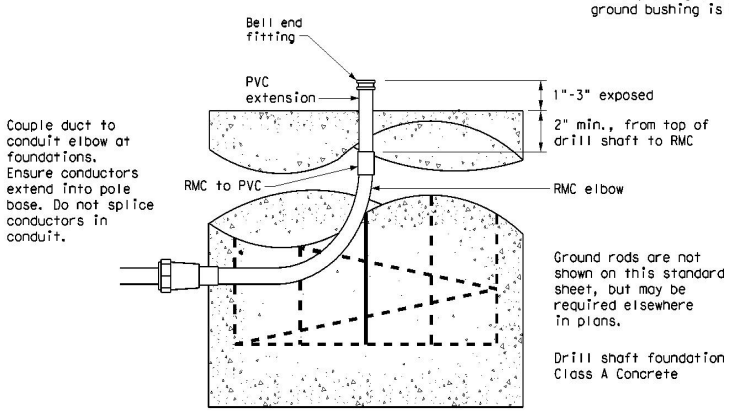

DUCT CABLE / HDPE AT FOUNDATION

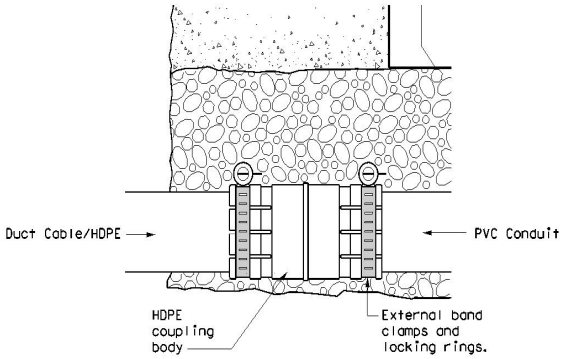

DUCT CABLE/HDPE TO PVC

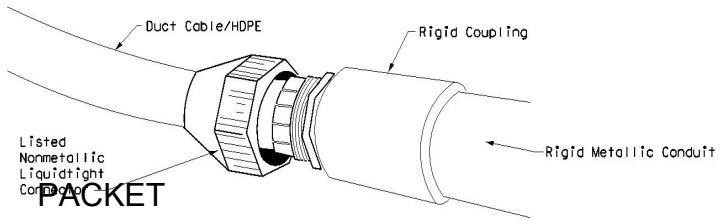

DUCT CABLE/HDPE TO RMC

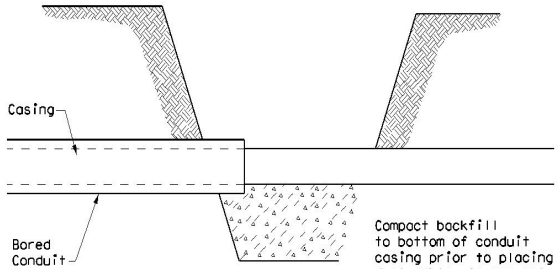

BORE PIT DETAIL

Texas Department of Transportation

Traffic Operations Division Standard

ELECTRICAL DETAILS DUCT CABLE/ HDPE CONDUIT

ED(11)-14

DN: TxDOT	CK: TxDOT	DW: TxDOT	CK: TxDOT
CONT	SECT	JOB	HIGHWAY
DIST	COUNTY		SHEET NO.
			29

© TxDOT October 2014

REVISIONS

71L

DISCLAIMER:
The use of this standard is governed by the "Texas Engineering Practice Act". No warranty of any kind is made by TxDOT for any purpose whatsoever. TxDOT assumes no responsibility for the conversion of this standard to other formats or for incorrect results or damages resulting from its use.

DATE:
FILE: edi11-14.dgn

BATTERY BOX GROUND BOXES NOTES

A. MATERIALS

1. Provide polymer concrete or fiberglass reinforced plastic (FRP) battery box ground box and cover in accordance with Departmental Material Specification (DMS) 11071 "Battery Box Ground Boxes." Battery box will accommodate up to 4 batteries, each measuring 8 in. x 13.5 in. x 10 in. (W x L x D). Label battery box ground box cover in accordance with DMS 11071.

2. Supply a marine grade batteries with covers. Secure the marine grade batteries with covers to the stainless steel rack in the bottom of the ground box with tie down straps.

B. CONSTRUCTION METHODS

1. Ensure conduit entry will not interfere with placement of the batteries in the battery box ground box.

2. Remove all gravel and dirt from conduit. Cap all conduits prior to placing aggregate and setting battery box ground box. Provide Grade 3 or 4 coarse aggregate as shown on Table 2 of Item 302 "Aggregates for Surface Treatments." Ensure the aggregate bed is in place and is a minimum of 9 in. deep prior to setting the box. Install battery box ground box on top of aggregate.

3. Cast battery box aprons in place. Reinforcing steel may be field bent. Ensure the depth of concrete for the apron extends from finished grade to the top of the aggregate bed under the box. Battery box ground box aprons, including concrete and reinforcing steel, are subsidiary to battery box ground boxes when called for by descriptive code.

4. Bolt covers down when not working in battery box ground boxes. Keep bolt holes in the box clear of dirt.

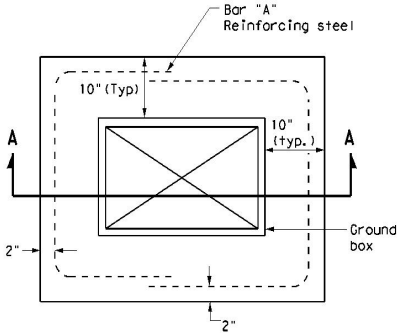

PLAN VIEW

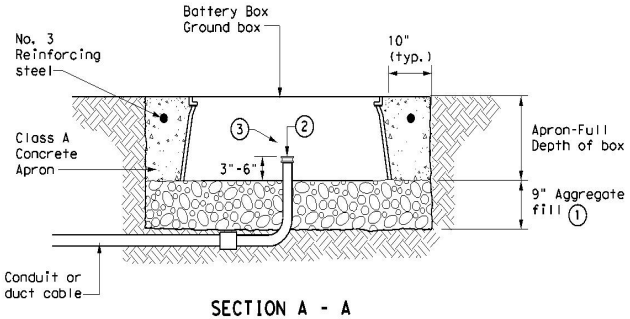

SECTION A - A

APRON FOR BATTERY BOX GROUND BOXES

(1) Place aggregate under the box and not in the box. Aggregate should not encroach on the interior volume of the box.

(2) Install bushing or bell end fitting on the upper end of conduit.

(3) Install all conduits in a neat and workmanlike manner.

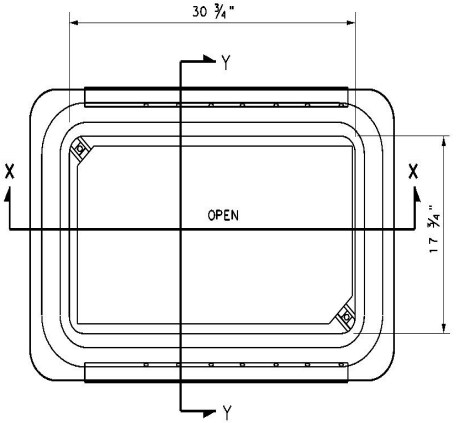

BATTERY BOX TOP VIEW

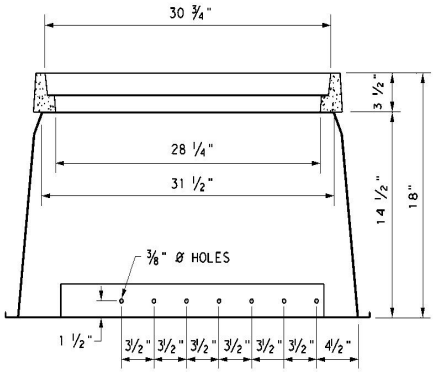

SECTION X-X

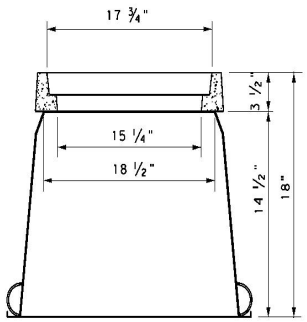

SECTION Y-Y

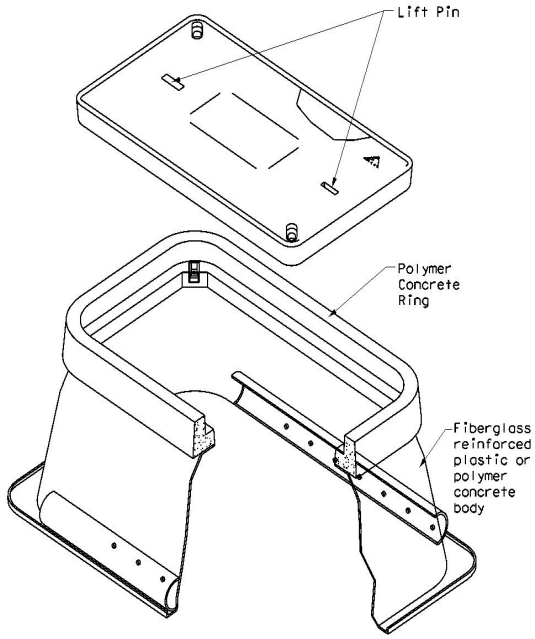

Texas Department of Transportation

Traffic Operations Division Standard

ELECTRICAL DETAILS BATTERY BOX GROUND BOXES

ED(12)-14

FILE: ed12-14.dgn	DN: TxDOT	CK: TxDOT	DW: TxDOT	CK: TxDOT			
©TxDOT October 2014	CONT	SECT	JOB	HIGHWAY			
REVISIONS							
	DIST	COUNTY		SHEET NO.			
				30			

71M

DISCLAIMER:
The use of this standard is governed by the "Texas Engineering Practice Act". No warranty of any kind is made by TxDOT for any purpose whatsoever. TxDOT assumes no responsibility for the conversion of this standard to other formats or for incorrect results or damages resulting from its use.

DATE:
FILE:

PACKET

DISCLAIMER:
The use of this standard is governed by the "Texas Engineering Practice Act". No warranty of any kind is made by TxDOT for any purpose whatsoever. TxDOT assumes no responsibility for the conversion of this standard to other formats or for incorrect results or damages resulting from its use.

DATE:
FILE:

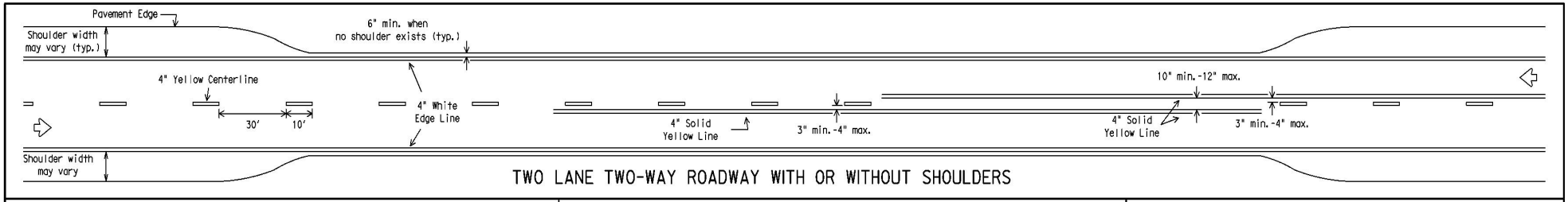

TWO LANE TWO-WAY ROADWAY WITH OR WITHOUT SHOULDERS

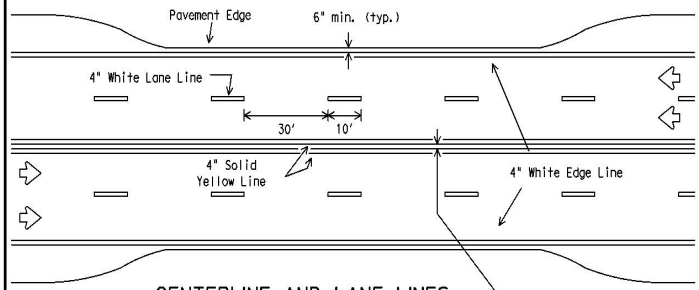

CENTERLINE AND LANE LINES FOUR LANE TWO-WAY ROADWAY WITH OR WITHOUT SHOULDERS

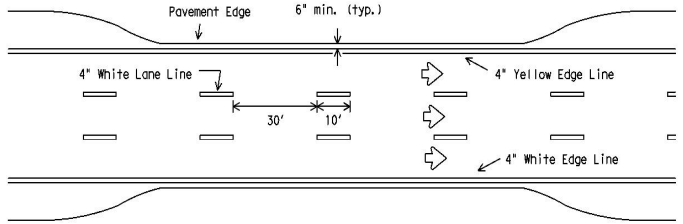

EDGE LINE AND LANE LINES ONE-WAY ROADWAY WITH OR WITHOUT SHOULDERS

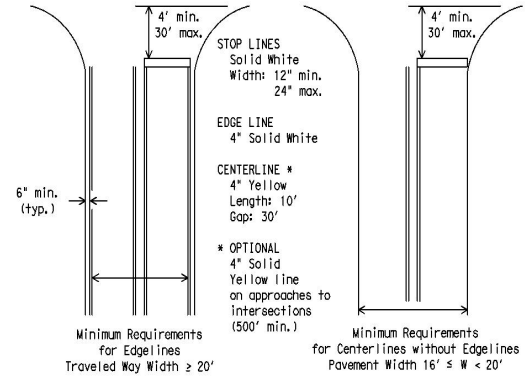

GUIDE FOR PLACEMENT OF STOP LINES, EDGE LINE & CENTERLINE

Based on Traveled Way and Pavement Widths for Undivided Highways

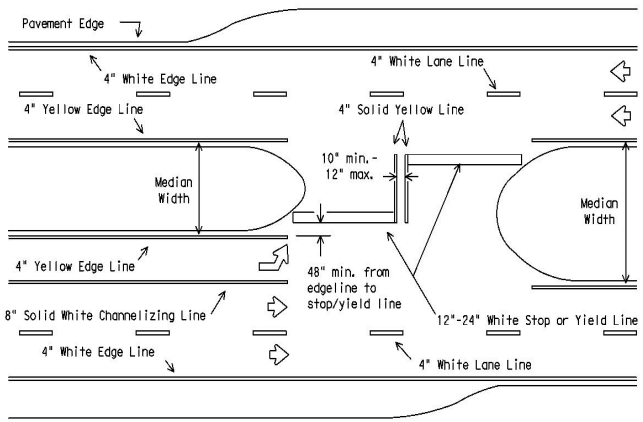

All medians shall be field measured to determine the location of necessary striping. Stop/Yield bars and centerlines shall be placed when the median width is greater than 30 ft. The median width is defined as the area between two roadways of a divided highway measured from edge of traveled way to edge of traveled way. The median excludes turn lanes. The median width might be different between intersections, interchanges and of opposite approaches of the same intersection. The narrow median width will be the controlling width to determine if markings are required.

FOUR LANE DIVIDED ROADWAY INTERSECTIONS

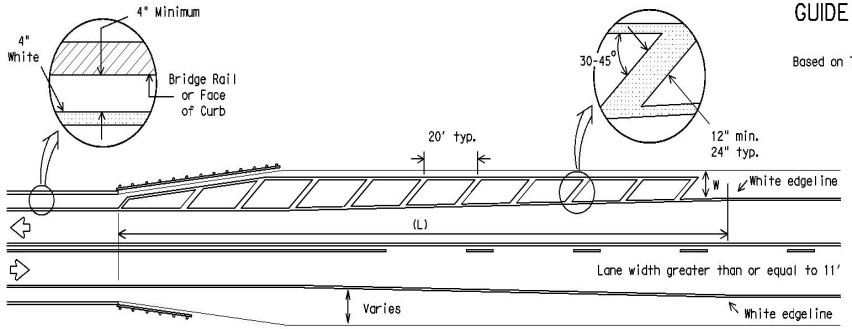

NOTES:

1. No-passing zone on bridge approach is optional but if used, it shall be a minimum 500 feet long.
2. For crosshatching length (L) see Table 1.
3. The width of the offset (W) and the required crosshatching width is the full shoulder width in advance of the bridge.
4. The crosshatching is not required if delineators or barrier reflectors are used along the structure.
5. For guard fence details, refer elsewhere in the plans.

ROADWAYS WITH REDUCED SHOULDER WIDTHS ACROSS BRIDGE OR CULVERT

TABLE 1 - TYPICAL LENGTH (L)

Posted Speed *	Formula
≤ 40	$L = \frac{WS^2}{60}$
≥ 45	L=WS

* 85th Percentile Speed may be used on roads where traffic speeds normally exceed the posted speed limit. Crosshatching length should be rounded up to nearest 5 foot increment.

L=Length of Crosshatching (FT.) W=Width of Offset (FT.)
S=Posted Speed (MPH)

EXAMPLES:

An 8 foot shoulder in advance of a bridge reduces to 4 feet on a 70 MPH roadway. The length of the cross-hatching should be:

$L = 8 \times 70 = 560$ ft.

A 4 foot shoulder in advance of a bridge reduces to 2 feet on a 40 MPH roadway. The length of the cross-hatching should be:

$L = 4(40)^2 / 60 = 106.67$ ft. rounded to 110 ft.

GENERAL NOTES

1. Edgeline striping shall be as shown in the plans or as directed by the Engineer. The edgeline should typically be placed a minimum of 6 inches from the edge of pavement. This distance may vary due to pavement raveling or other conditions. Edgelines are not required in curb and gutter sections of roadways.
2. The traveled way includes only that portion of the roadway used for vehicular travel and not the parking lanes, sidewalks, berms and shoulders. The traveled ways shall be measured from the inside of edgeline to inside of edgeline of a two lane roadway.

MATERIAL SPECIFICATIONS	
PAVEMENT MARKERS (REFLECTORIZED)	DMS-4200
EPOXY AND ADHESIVES	DMS-6100
BITUMINOUS ADHESIVE FOR PAVEMENT MARKERS	DMS-6130
TRAFFIC PAINT	DMS-8200
HOT APPLIED THERMOPLASTIC	DMS-8220
PERMANENT PREFABRICATED PAVEMENT MARKINGS	DMS-8240

All pavement marking materials shall meet the required Departmental Material Specifications as specified by the plans.

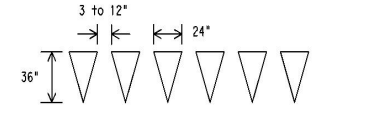

YIELD LINES

Texas Department of Transportation
Traffic Operations Division

TYPICAL STANDARD PAVEMENT MARKINGS

PM(1)-12

© TXDOT November 1978

DN: TXDOT	CK: TXDOT	DW: TXDOT	CK: TXDOT

REVISIONS	CONT	SECT	JOB	HIGHWAY
8-95 2-12				
5-00				
8-00				
3-03				

DIST	COUNTY	SHEET NO.
		31

22A

DISCLAIMER:
The use of this standard is governed by the "Texas Engineering Practice Act". No warranty of any kind is made by TxDOT for any purpose whatsoever. TxDOT assumes no responsibility for the conversion of this standard to other formats or for incorrect results or damages resulting from its use.

REFLECTIVE RAISED PAVEMENT MARKERS FOR VEHICLE POSITIONING GUIDANCE

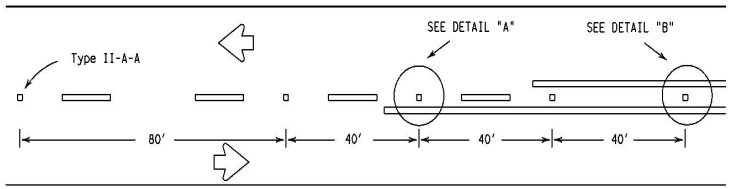

CENTERLINE FOR ALL TWO LANE ROADWAYS

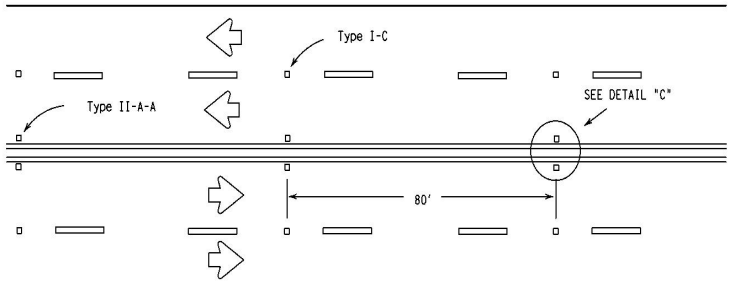

CENTERLINE & LANE LINES
FOR FOUR LANE TWO-WAY HIGHWAYS

Raised pavement marker Type I-C, clear face toward normal traffic, shall be placed on 80-foot centers.

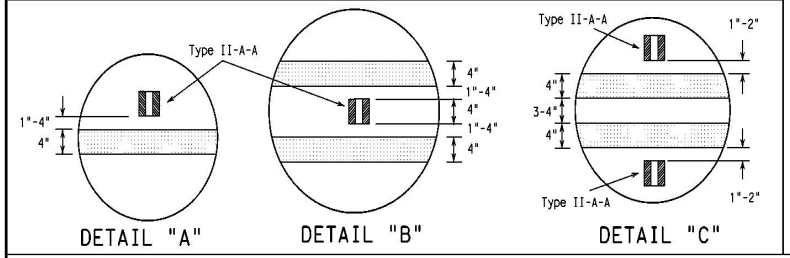

DETAIL "A" DETAIL "B" DETAIL "C"

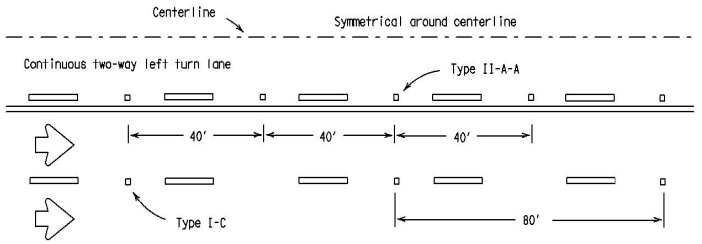

CENTERLINE AND LANE LINES FOR TWO-WAY LEFT TURN LANE

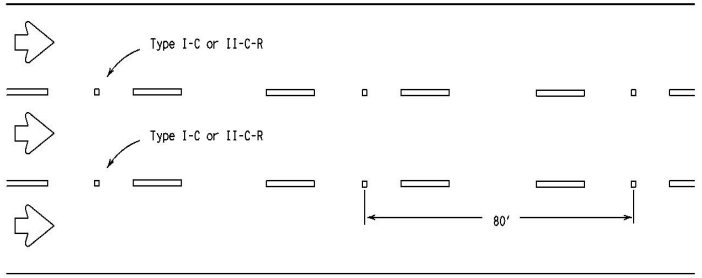

LANE LINES FOR ONE-WAY ROADWAY (NON-FREEWAY FACILITIES)

Raised pavement markers Type II-C-R shall have clear face toward normal traffic and red face toward wrong-way traffic.

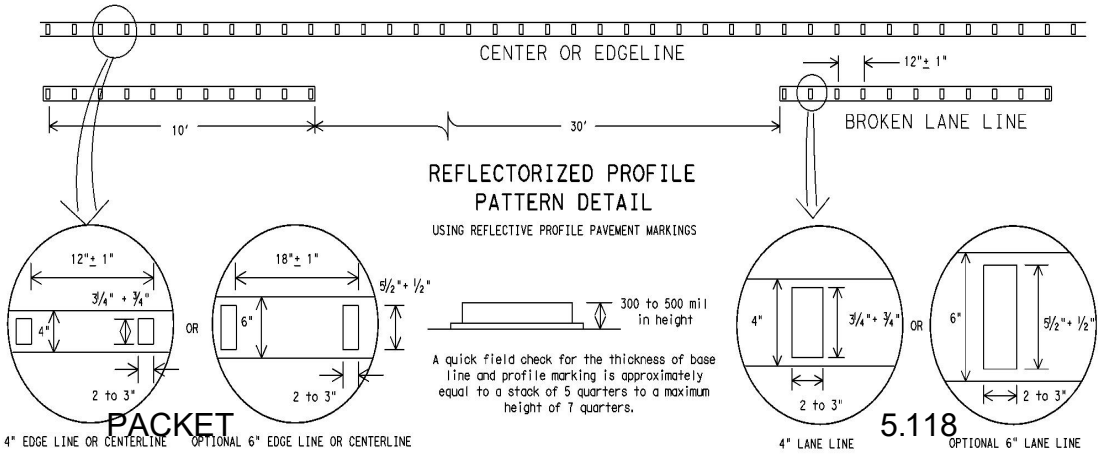

REFLECTORIZED PROFILE PATTERN DETAIL

USING REFLECTIVE PROFILE PAVEMENT MARKINGS

300 to 500 mil in height

A quick field check for the thickness of base line and profile marking is approximately equal to a stack of 5 quarters to a maximum height of 7 quarters.

NOTE:
Profile markings shall not be placed on roadways with a posted speed limit of 45 MPH or less.

GENERAL NOTES

1. All raised pavement markers placed in broken lines shall be placed in line with and midway between the stripes.
2. On concrete pavements the raised pavement markers should be placed to one side of the longitudinal joints.

MATERIAL SPECIFICATIONS	
PAVEMENT MARKERS (REFLECTORIZED)	DMS-4200
EPOXY AND ADHESIVES	DMS-6100
BITUMINOUS ADHESIVE FOR PAVEMENT MARKERS	DMS-6130
TRAFFIC PAINT	DMS-8200
HOT APPLIED THERMOPLASTIC	DMS-8220
PERMANENT PREFABRICATED PAVEMENT MARKINGS	DMS-8240

All pavement marking materials shall meet the required Departmental Material Specifications as specified by the plans.

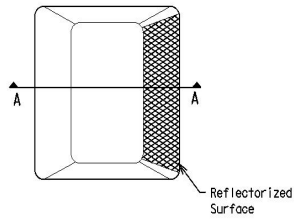

Type I (Top View)

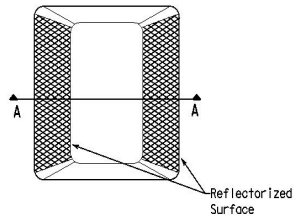

Type II (Top View)

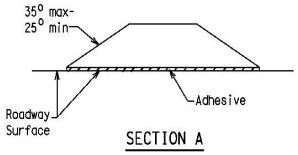

SECTION A

RAISED PAVEMENT MARKERS

Texas Department of Transportation
Traffic Operations Division

POSITION GUIDANCE USING RAISED MARKERS
REFLECTORIZED PROFILE MARKINGS

PM(2)-12

© TxDOT April 1971

DN: TXDOT	CK: TXDOT	DW: TXDOT	CK: TXDOT

REVISIONS		CONT	SECT	JOB	HIGHWAY
4-92	2-10				
5-00	2-12				
8-00					
2-08					

DIST	COUNTY	SHEET NO.
		32

22B

DATE:
FILE:

PACKET 5.118 July 11, 2023

DISCLAIMER: The use of this standard is governed by the "Texas Engineering Practice Act". No warranty of any kind is made by TxDOT for any purpose whatsoever. TxDOT assumes no responsibility for the conversion of this standard to other formats or for incorrect results or damages resulting from its use.

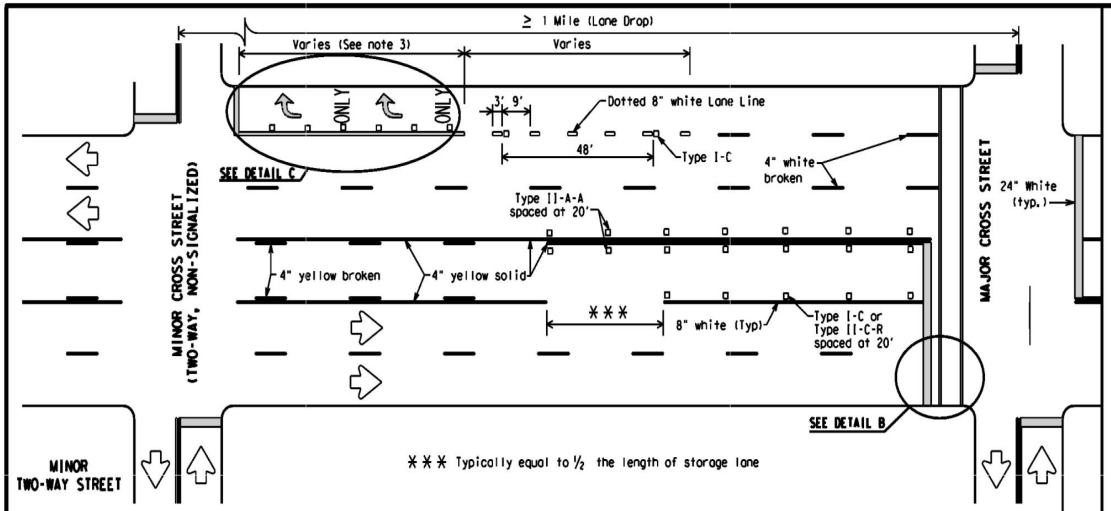

TYPICAL TWLTL AT TWO-WAY CROSS STREET AND RIGHT TURN LANE DROP

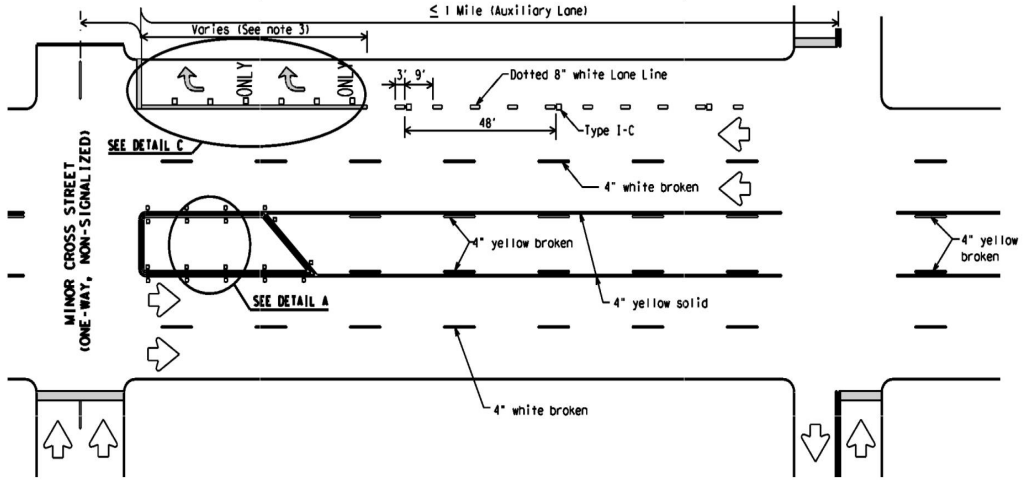

TYPICAL TWLTL AT ONE-WAY STREET AND RIGHT TURN AUXILIARY LANE

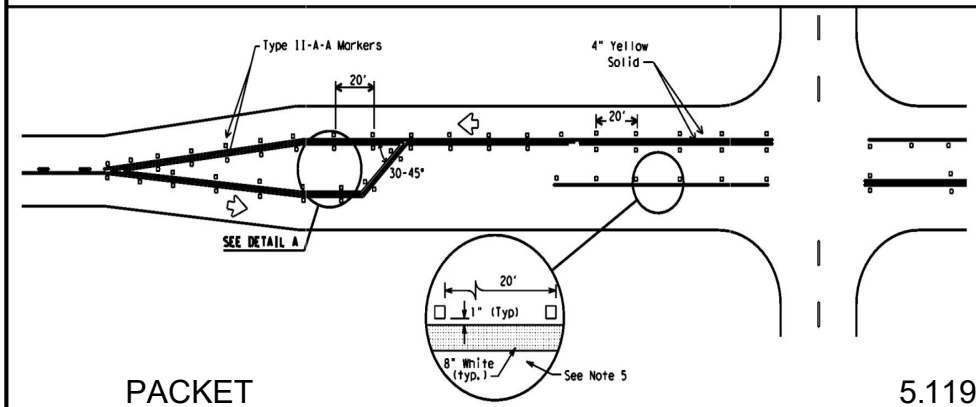

TYPICAL TWO-LANE HIGHWAY INTERSECTION WITH LEFT TURN BAYS

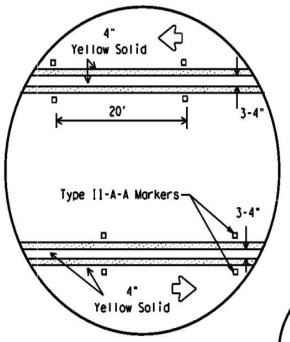

DETAIL A

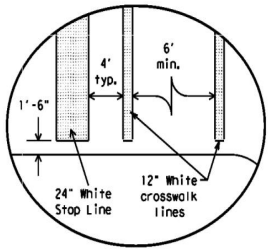

Final placement of Stop Bar and Crosswalk shall be approved by the Engineer in the field.

DETAIL B

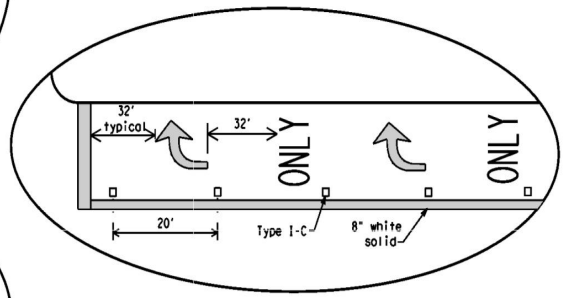

DETAIL C

MATERIAL SPECIFICATIONS	
PAVEMENT MARKERS (REFLECTORIZED)	DMS-4200
EPOXY AND ADHESIVES	DMS-6100
BITUMINOUS ADHESIVE FOR PAVEMENT MARKERS	DMS-6130
TRAFFIC PAINT	DMS-8200
HOT APPLIED THERMOPLASTIC	DMS-8220
PERMANENT PREFABRICATED PAVEMENT MARKINGS	DMS-8240

All pavement marking materials shall meet the required Departmental Material Specifications as specified by the plans.

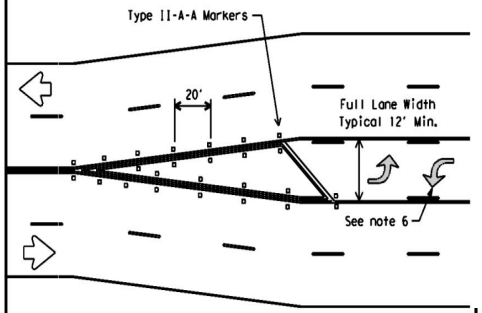

TYPICAL TRANSITION FOR TWLTL AND DIVIDED HIGHWAY

GENERAL NOTES

1. Refer elsewhere in plans for additional RPM placement and details.
2. Lane use word and arrow markings shall be used where through lanes approaching an intersection become mandatory turn lanes. Lane use word and arrow markings should be used in auxiliary lanes of substantial length. Lane use arrow markings or word and arrow markings may be used in other lanes and turn bays for emphasis. Details for words and arrows as shown in the Standard Highway Sign Designs for Texas.
3. When lane used word and arrow markings are used, two sets of arrows should be used if the length of the bay is greater than 180 feet. When a single lane use arrow or word and arrow marking is used for a short turn lane, it should be located at or near the upstream end of the full-width turn lane.
4. Other crosswalk patterns as shown in the "Texas Manual on Uniform Traffic Control Devices" may be used.
5. Raised pavement marker Type I-C with undivided highways, flush medians and two way left turn lanes. Raised pavement marker Type II-C-R with divided highways and raised medians.
6. A two-way left-turn (TWLT) lane-use arrow pavement marking should be used at or just downstream from the beginning of a two-way left-turn lane within a corridor. Repeating the marking after each intersection or dedicated turn bay is not required unless stated elsewhere in the plans.

Texas Department of Transportation
Traffic Operations Division

PAVEMENT MARKINGS FOR TWO-WAY LEFT TURN LANES DIVIDED HIGHWAYS AND RURAL LEFT TURN BAYS

PM(3)-12

©TxDOT April 1998

DN: TxDOT	CK: TxDOT	DW: TxDOT	CK: TxDOT
REVISIONS	CONT	SECT	JOB	HIGHWAY
5-00 2-12				
8-00				
3-03	DIST	COUNTY		SHEET NO.
2-10				33

22C

DATE:
FILE:

DISCLAIMER:
The use of this standard is governed by the "Texas Engineering Practice Act". No warranty of any kind is made by TxDOT for any purpose whatsoever. TxDOT assumes no responsibility for the conversion of this standard to other formats or for incorrect results or damages resulting from its use.

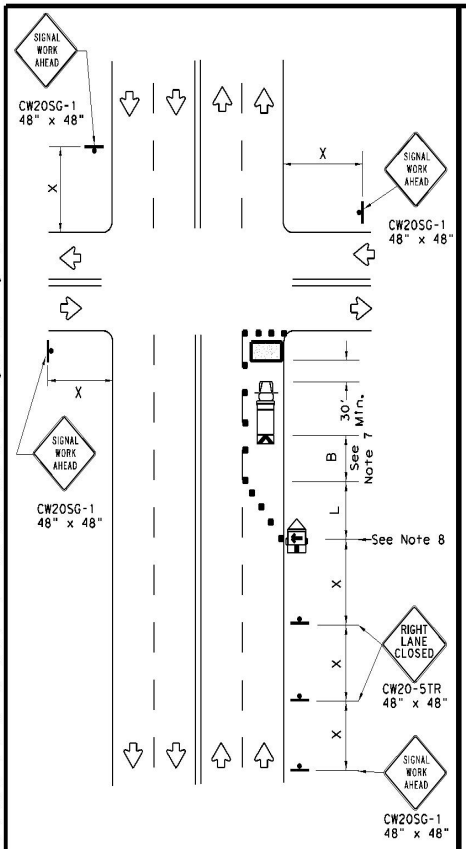

NEAR SIDE LANE CLOSURE

SHORT DURATION OR SHORT TERM STATIONARY

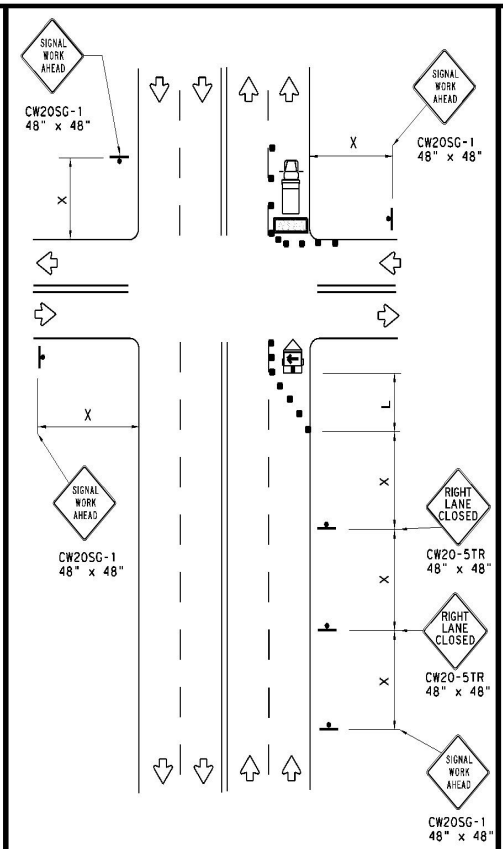

FAR SIDE RIGHT LANE CLOSURE

SHORT DURATION OR SHORT TERM STATIONARY

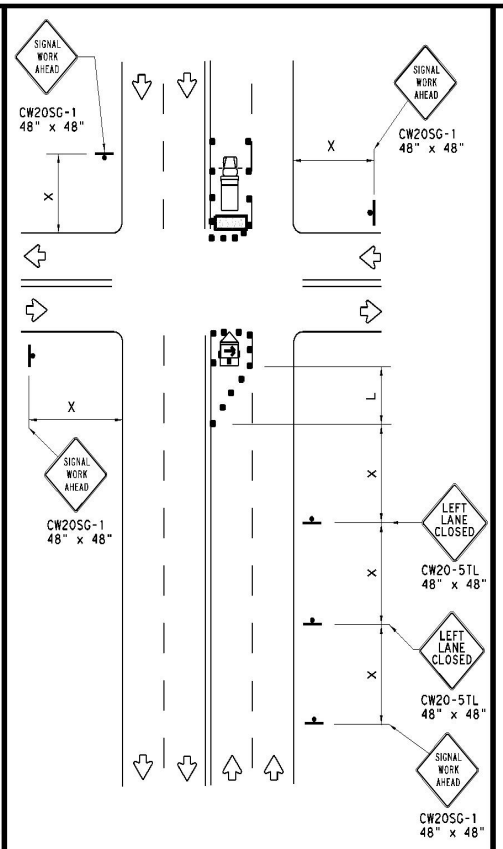

FAR SIDE LEFT LANE CLOSURE

SHORT DURATION OR SHORT TERM STATIONARY

LEGEND			
	Type 3 Barricade		Channelizing Devices
	Heavy Work Vehicle		Truck Mounted Attenuator (TMA)
	Trailer Mounted Flashing Arrow Board	M	Portable Changeable Message Sign (PCMS)
	Sign		Traffic Flow
	Flag		Flagger

Posted Speed *	Formula	Minimum Desirable Taper Lengths ** 10' Offset	11' Offset	12' Offset	Suggested Maximum Spacing of Channelizing Devices On a Taper	On a Tangent	Minimum Sign Spacing "X" Distance	Suggested Longitudinal Buffer Space "B"
30	$L=\frac{WS^2}{60}$	150'	165'	180'	30'	60'	120'	90'
35		205'	225'	245'	35'	70'	160'	120'
40		265'	295'	320'	40'	80'	240'	155'
45	L=WS	450'	495'	540'	45'	90'	320'	195'
50		500'	550'	600'	50'	100'	400'	240'
55		550'	605'	660'	55'	110'	500'	295'
60		600'	660'	720'	60'	120'	600'	350'
65		650'	715'	780'	65'	130'	700'	410'
70		700'	770'	840'	70'	140'	800'	475'
75		750'	825'	900'	75'	150'	900'	540'

* Conventional Roads Only

** Taper lengths have been rounded off.
L=Length of Taper(FT) W=Width of Offset(FT) S=Posted Speed(MPH)

WORKERS IN BUCKET TRUCKS SHALL NOT WORK ABOVE OPEN LANES OF TRAFFIC.

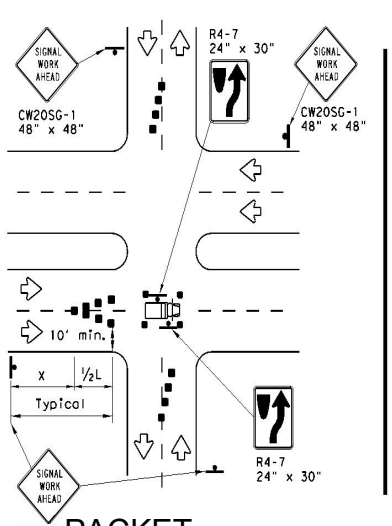

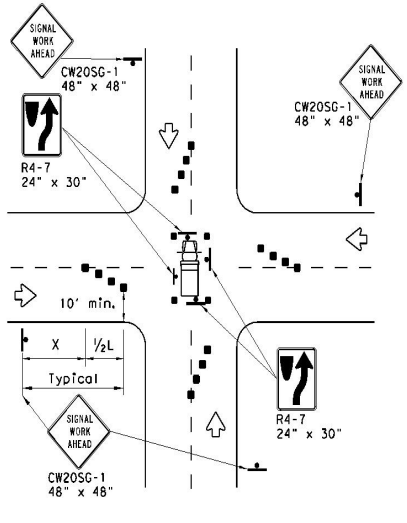

OPERATIONS IN THE INTERSECTION

SHORT DURATION

GENERAL NOTES

1. The minimum size channelizing device is the 28" cone. 42" Two-piece cones, drums, vertical panels or barricades will be required when the device must be left unattended at night.
2. Obstructions or hazards at the work area shall be clearly marked and delineated at all times.
3. Flaggers and Flagger Symbol (CW20-7) signs may be required according to field conditions.
4. Vehicles parked in roadway shall be equipped with at least two high intensity rotating, flashing, oscillating or strobe type lights.
5. High level warning devices (flag trees) may be used at corners of the vehicle.
6. When work operations are performed on existing signals, the signals may be placed in flashing red mode when approved by the engineer. If existing signals do not have power, All-Way Stop (R1-1 and R1-3P) signs may be implemented when approved by the engineer.
7. For Short-Term Stationary work the buffer space "B" from the above table should be used if field conditions permit. For Short Duration (less than 1 hour) any buffer space provided will enhance the safety of the setup.
8. The arrow board at this location may be omitted for Short Duration work if the work vehicle has an arrow board in operation. As an option, the arrow board may be placed at the end of the taper in the closed lane if space is not available at the beginning of the taper.
9. Signs and devices for the NEAR SIDE LANE CLOSURE may be altered for a left lane closure by using a LEFT LANE CLOSED (CW20-5TL) and adding channelizing devices on the centerline to protect the work space from opposing traffic.

SHEET 1 OF 2

Texas Department of Transportation | Traffic Operations Division Standard

TRAFFIC SIGNAL WORK TYPICAL DETAILS

WZ(BTS-1)-13

DN: TxDOT	CK: TxDOT	DW: TxDOT	CK: TxDOT
©TxDOT April 1992	CONT	SECT	JOB	HIGHWAY
REVISIONS				
2-98 10-99 7-13	DIST	COUNTY		SHEET NO.
4-98 3-03				34

DATE:
FILE:

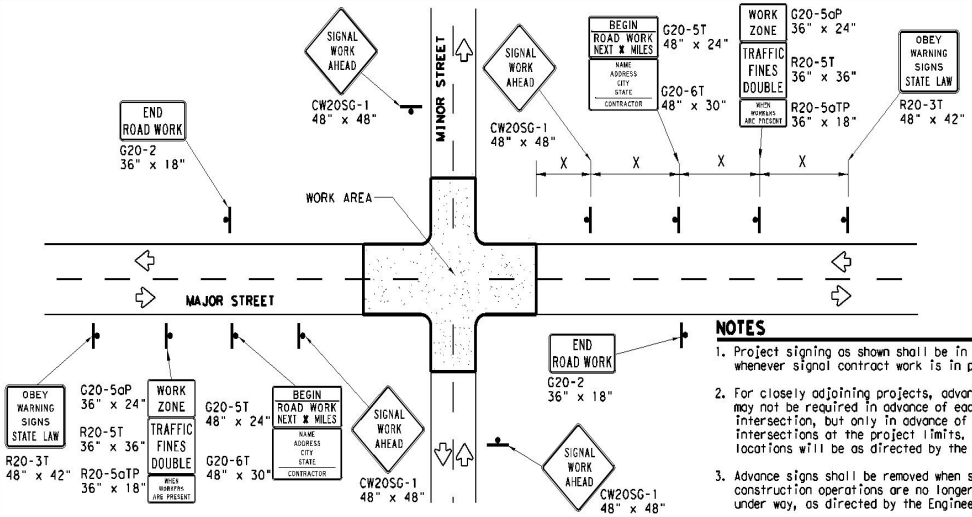

TYPICAL ADVANCE SIGNAL PROJECT SIGNING

FOR LONG TERM and INTERMEDIATE-TERM STATIONARY WORK OPERATIONS

NOTES

1. Project signing as shown shall be in place whenever signal contract work is in progress.
2. For closely adjoining projects, advance signing may not be required in advance of each intersection, but only in advance of the intersections at the project limits. Actual locations will be as directed by the Engineer.
3. Advance signs shall be removed when signal construction operations are no longer under way, as directed by the Engineer.
4. Warning sign spacing shown is typical for both directions.
5. See the Table on sheet 1 of 2 for Typical warning sign spacing.

GENERAL NOTES FOR WORK ZONE SIGNS

1. Signs shall be installed and maintained in a straight and plumb condition.
2. Wooden sign posts shall be painted white.
3. Barricades shall NOT be used as sign supports.
4. Nails shall NOT be used to attach signs to any support.
5. All signs shall be installed in accordance with the plans or as directed by the Engineer.
6. The Contractor shall furnish the sign design shown in the plans or in the "Standard Highway Sign Designs for Texas" (SHSD).
7. The Contractor shall furnish sign supports and substrates listed in the "Compliant Work Zone Traffic Control Device List" (CWZTCD), installed as per the manufacturer's recommendations.
8. Temporary signs that have damaged or cracked substrates and/or damaged or marred reflective sheeting shall be replaced as directed by the Engineer.
9. Identification markings may be shown only on the back of the sign substrate. The maximum height of letters and/or company logos used for identification shall be 1".
10. Damaged wood posts shall be replaced. Splicing wood posts will not be allowed.

DURATION OF WORK

1. Work zone durations are defined in Part 6, Section 6G.02 of the Texas Manual on Uniform Traffic Control Devices (TMUTCD).

SIGN MOUNTING HEIGHT

1. Sign height of Long-term/Intermediate-term warning signs shall be as shown on Figure 6F-1 of the TMUTCD.
2. Sign height of Short-term/Short Duration warning signs shall be as shown on Figure 6F-2 of the TMUTCD.
3. Regulatory signs shall be mounted at least 7 feet, but not more than 9 feet, above the paved surface regardless of work duration.

REMOVING OR COVERING

1. When sign messages may be confusing or do not apply, the signs shall be removed or completely covered, unless otherwise approved by the Engineer.
2. When signs are covered, the material used shall be opaque, such as heavy mil black plastic, or other materials which will cover the entire sign face and maintain their opaque properties under automobile headlights at night without damaging the sign sheeting. Burlap, or heavy materials such as plywood or aluminum shall not be used to cover signs.
3. Duct tape or other adhesive material shall NOT be affixed to a sign face.
4. Signs and anchor stubs shall be removed and holes back filled upon completion of the work.

REFLECTIVE SHEETING

1. All signs shall be retroreflective and constructed of sheeting meeting the requirements of the DMS and color usage table shown on this sheet.

SIGN SUPPORT WEIGHTS

1. Weights used to keep signs from turning over should be sandbags filled with dry, cohesionless material.
2. The sandbags will be tied shut to keep the sand from spilling and to maintain a constant weight.
3. Rock, concrete, iron, steel or other solid objects will not be permitted for use as sign support weights.
4. Sandbags should weigh a minimum of 35 lbs and a maximum of 50 lbs.
5. Sandbags shall be made of a durable material that tears upon vehicular impact. Rubber, such as tire inner tubes, shall not be used.
6. Rubber ballasts designed for channelizing devices should not be used for ballast on portable sign supports. Sign supports designed and manufactured with rubber bases may be used when shown on the CWZTCD list.
7. Sandbags shall only be placed along or laid over the base supports of the traffic control device and shall not be suspended above ground level or hung with rope, wire, chains or other fastners. Sandbags shall be placed along the length of the skids to weigh down the sign support.
8. Sandbags shall NOT be placed under the skid and shall not be used to level sign supports placed on slopes.

LEGEND	
	Sign
	Channelizing Devices
	Type 3 Barricade

DEPARTMENTAL MATERIAL SPECIFICATIONS	
SIGN FACE MATERIALS	DMS-8300
FLEXIBLE ROLL-UP REFLECTIVE SIGNS	DMS-8310

COLOR	USAGE	SHEETING MATERIAL
ORANGE	BACKGROUND	TYPE B_{FL} OR TYPE C_{FL} SHEETING
WHITE	BACKGROUND	TYPE A SHEETING
BLACK	LEGEND & BORDERS	ACRYLIC NON-REFLECTIVE SHEETING

Only pre-qualified products shall be used. Accepted "Compliant Work Zone Traffic Control Devices List" (CWZTCD) describes pre-qualified products and their sources and may be found at the following web address:
http://www.txdot.gov/txdot_library/publications/construction.htm

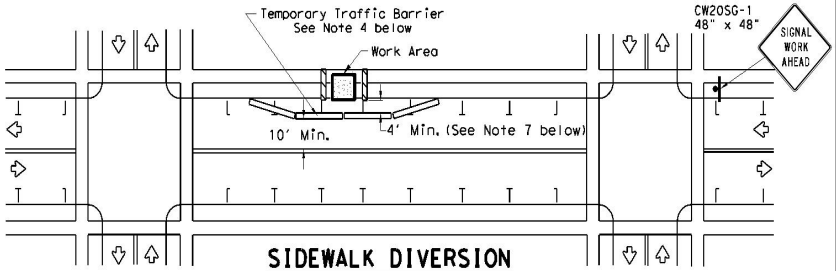

SIDEWALK DIVERSION

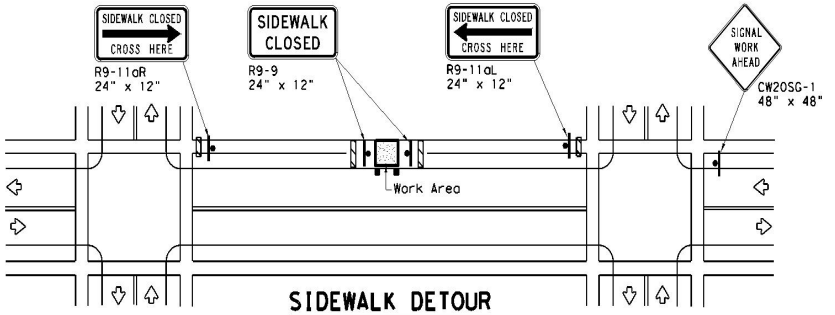

SIDEWALK DETOUR

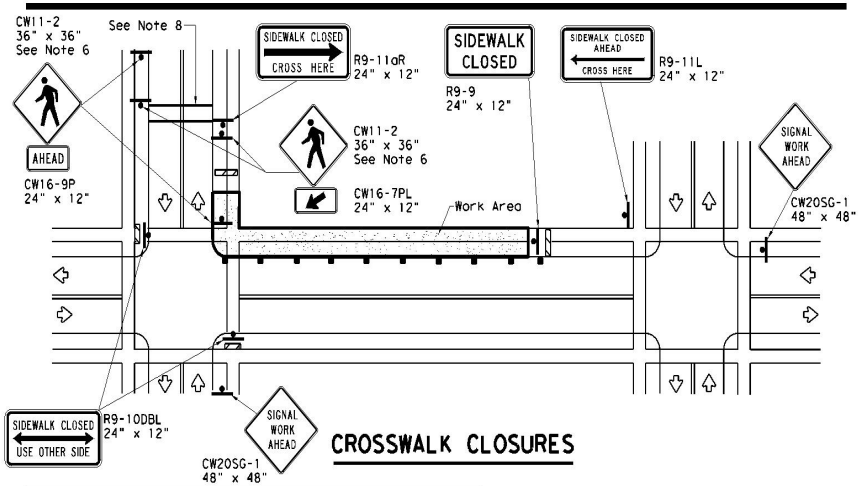

CROSSWALK CLOSURES

PEDESTRIAN CONTROL

1. Holes, trenches or other hazards shall be adequately protected by covering, delineating or surrounding the hazard with orange plastic pedestrian fencing or longitudinal channelizing devices, or as directed by the Engineer.
2. "CROSSWALK CLOSURES" as detailed above will require the Engineer's approval prior to installation.
3. R9 series signs shown may be placed on supports detailed on the BC standards or CWZTCD list, or when fabricated from approved lightweight plastic substrates, they may be mounted on top of a plastic drum at or near the location shown.
4. For speeds less than 45 mph longitudinal channelizing devices may be used instead of traffic barriers when approved by the Engineer. Attenuation of blunt ends and installation of water filled devices shall be as per BC(9) and manufacturer's recommendations.
5. Location of devices are for general guidance. Actual device spacing and location must be field adjusted to meet actual conditions.
6. Where pedestrians with visual disabilities normally use the closed sidewalk Detectable Pedestrian Barricades should be used instead of the Type 3 Barricades shown.
7. The width of existing sidewalk should be maintained if practical.
8. Pavement markings for mid-block crosswalks shall be paid for under the appropriate bid items.
9. When crosswalks or other pedestrian facilities are closed or relocated, temporary facilities shall be detectable and shall include accessibility features consistent with the features present in the existing pedestrian facility.

SHEET 2 OF 2

Texas Department of Transportation | Traffic Operations Division Standard

TRAFFIC SIGNAL WORK BARRICADES AND SIGNS

WZ(BTS-2)-13

FILE:	DN: TxDOT	CK: TxDOT	DW: TxDOT	CK: TxDOT
©TxDOT April 1992	CONT	SECT	JOB	HIGHWAY
REVISIONS				
2-98 10-99 7-13	DIST	COUNTY		SHEET NO.
4-98 3-03				35

115

DISCLAIMER:
The use of this standard is governed by the "Texas Engineering Practice Act". No warranty of any kind is made by TxDOT for any purpose whatsoever. TxDOT assumes no responsibility for the conversion of this standard to other formats or for incorrect results or damages resulting from its use.

DATE:
FILE:

PACKET 5121 July 11, 2023

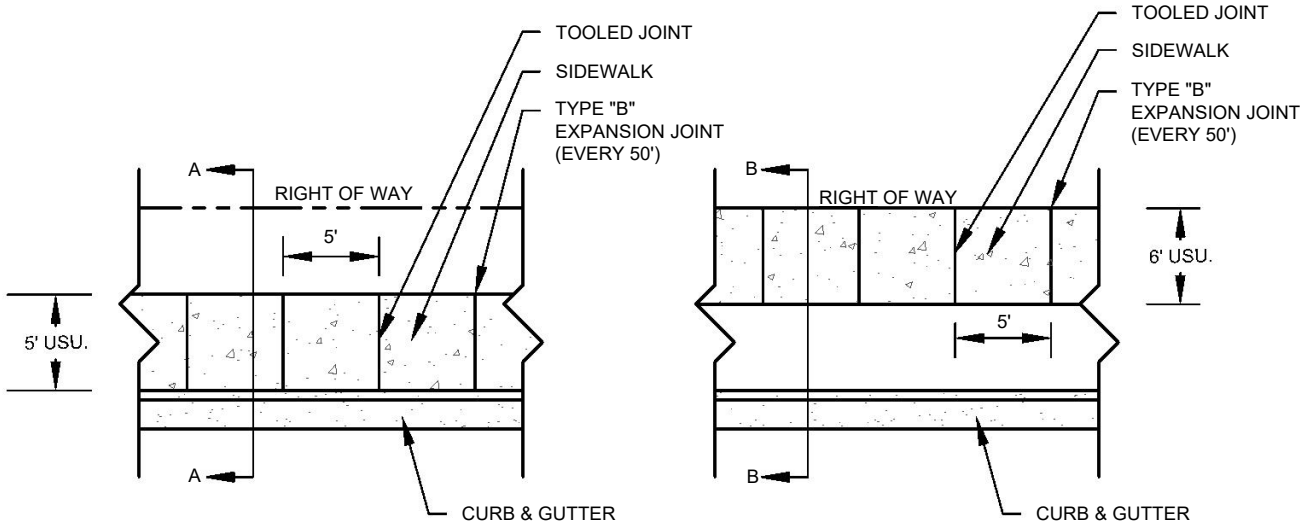

ATTACHED SIDEWALK PLACEMENT

DETACHED SIDEWALK PLACEMENT

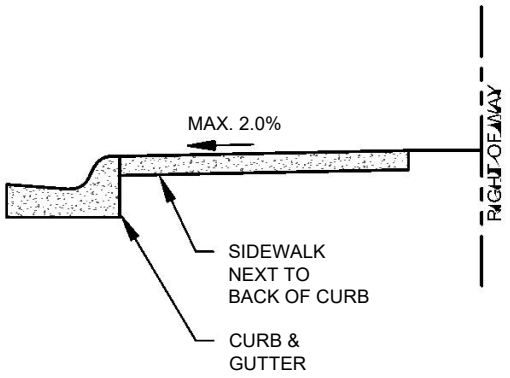

SECTION A - A

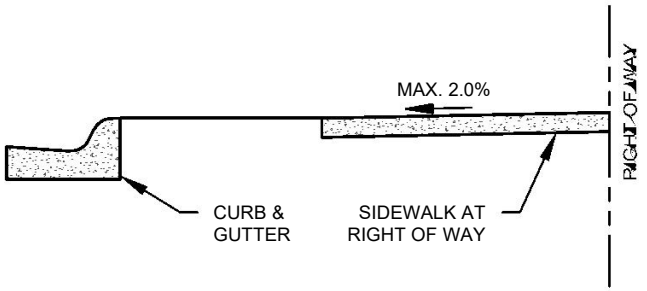

SECTION B - B

NOTES:

1. CONCRETE TO BE CITY OF MIDLAND CLASS "A" AND HAVE A MINIMUM 28 DAY COMPRESSION STRENGTH OF 3000 PSI. USE FIBER REINFORCED CONCRETE PAVEMENT THROUGHOUT.
2. SIDEWALK TO BE A MINIMUM OF 5' WIDE AND 4" THICK.
3. SIDEWALKS TO HAVE TYPE A SAWCUT JOINTS OR TOOLED JOINTS EVERY 5'.
4. TYPE "B" EXPANSION JOINTS TO BE LOCATED AT ALL PEDESTRIAN ACCESS RAMPS AND WHEREVER NEW SIDEWALK IS PLACED ADJACENT TO EXISTING CONCRETE.
5. ATTACHED SIDEWALK WILL BE LOCATED ADJACENT TO THE BACK OF CURB.
6. DETACHED SIDEWALK WILL BE LOCATED ADJACENT TO THE RIGHT-OF-WAY.
7. SIDEWALK CROSS-SLOPE MAY NOT EXCEED 2.0%.
8. ALL EXPOSED SIDEWALK EDGES TO HAVE A 1/2" RADIUS.
9. WHERE OBSTRUCTION IN SIDEWALK EXIST, THERE SHALL BE A 3' MINIMUM CLEARANCE. SIDEWALK LOCATION MAY BE SHIFTED WITH THE APPROVAL OF THE CITY ENGINEER.
10. ALL SIDEWALKS WITH A CONCRETE SURFACE SHALL HAVE A COURSE BROOM FINISH OR OTHER ROUGH NON-SKID TYPE FINISH AS APPROVED BY THE CITY ENGINEER.
11. MATERIALS AND CONSTRUCTION METHODS TO CONFORM TO THE CITY OF MIDLAND STANDARDS AND SPECIFICATIONS.
12. CONSTRUCT AS SHOWN UNLESS OTHERWISE APPROVED IN WRITING BY THE CITY ENGINEER.
13. SIDEWALKS IN DOWNTOWN PER CENTRAL BUSINESS DISTRICT POLICY.

MIDLAND Engineering Services	DRAWN: DPM CHECKED: JCF APPROVED: MCC	EFFECTIVE DATE: 10/01/2018	SCALE: NTS	DETAIL:
	5.122	STANDARD SIDEWALK	July 11, 2023	225

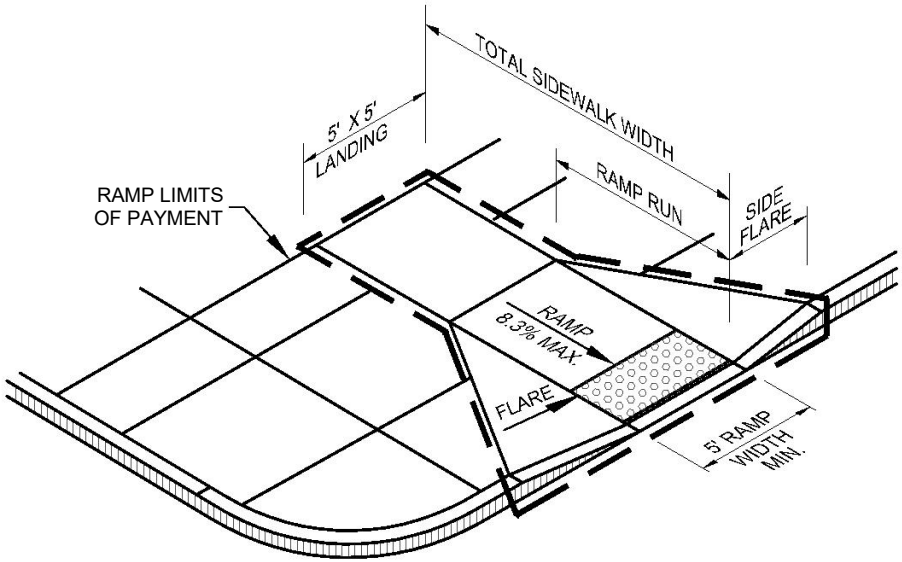

TYPE 1

PERPENDICULAR CURB RAMP

CURB RAMP NOTES:

1. ADJUST CURB RAMP LOCATION AND OR TYPE SO THAT NO OBSTRUCTION IS LOCATED WITHIN THE LANDING AREA.
2. ALL SLOPES ARE MAXIMUM ALLOWABLE. THE LEAST POSSIBLE SLOPE THAT WILL STILL DRAIN PROPERLY SHOULD BE USED.
3. LANDINGS SHALL BE 5'X 5' MINIMUM WITH A MAXIMUM 2% SLOPE IN ANY DIRECTION. WHERE OBSTRUCTIONS EXIST, THERE SHALL BE A 3' MINIMUM CLEARANCE IN WIDTH AND LENGTH OF THE LANDING.
4. MANEUVERING SPACE AT THE BOTTOM OF CURB RAMPS SHALL BE A MINIMUM OF 4'X4' WHOLLY CONTAINED WITHIN THE CROSSWALK AND TO THE ENTIRE OUTSIDE OF THE PARALLEL VEHICULAR TRAVEL PATH.
5. MAXIMUM ALLOWABLE CROSS SLOPE ON SIDEWALK AND CURB RAMP SURFACES IS 2%.
6. CURB RAMPS WITH RETURNED CURBS MAY BE USED ONLY WHERE PEDESTRIANS WOULD NOT NORMALLY WALK ACROSS THE RAMP, EITHER BECAUSE THE ADJACENT SURFACE IS PLANTING OR OTHER NON-WALKING SURFACE OR BECAUSE THE SIDE APPROACH IS SUBSTANTIALLY OBSTRUCTED. OTHERWISE, PROVIDE FLARED SIDES.
7. ADDITIONAL INFORMATION ON CURB RAMP LOCATION, DESIGN, LIGHT REFLECTIVE VALUE AND TEXTURE MAY BE FOUND IN THE CURRENT EDITION OF THE TEXAS ACCESSIBILITY STANDARDS (TAS) AND 16 TAC 68.102.
8. AT INTERSECTIONS WHERE CROSSWALK MARKINGS ARE NOT REQUIRED, CURB RAMPS SHALL BE ALIGNED WITH THEORETICAL CROSSWALKS,OR AS DIRECTED BY THE ENGINEER.
9. PROVIDE A SMOOTH TRANSITION WHERE THE CURB RAMPS CONNECT TO THE STREET.
10. FLARE SLOPE SHALL NOT EXCEED 10% MEASURED ALONG CURB LINE.
11. ALL RAMPS AND LANDINGS WITH A CONCRETE SURFACE SHALL HAVE A COURSE BROOM FINISH OR OTHER ROUGH NON-SKID TYPE FINISH AS APPROVED BY THE ENGINEER.
12. PLACE 6" OF CONCRETE IN RAMPS, LANDINGS, AND FLARES THAT ARE LOCATED AT THE RETURNS ADJACENT TO THE BACK OF CURB OF ARTERIAL STREETS AND COMMERCIAL SITES.

GENERAL NOTES:

1. CONCRETE TO BE CITY OF MIDLAND CLASS "A" WITH A MINIMUM 28 DAY COMPRESSION STRENGTH OF 3000 PSI. USE FIBER REINFORCED CONCRETE THROUGHOUT.
2. MATERIALS AND CONSTRUCTION METHODS TO CONFORM TO THE CITY OF MIDLAND STANDARDS AND SPECIFICATIONS UNLESS OTHERWISE DIRECTED BY ADA STANDARDS AND RESOURCES.

37

MIDLAND Engineering Services	DRAWN: DPM CHECKED: JCF APPROVED: MCC	EFFECTIVE DATE: 10/01/2018	SCALE: NTS	DETAIL:
		PERPENDICULAR CURB RAMP		232

DETECTABLE WARNING SURFACE NOTES:

1. DETECTABLE WARNING SURFACE SUCH AS ARMOR-TILE ADA SOUND AMPLIFYING DETECTABLE/TACTILE WARNING SURFACE TILE OR EQUAL AND APPROVED BY THE ENGINEER AS MEETING ALL REQUIREMENTS OF ASTM C-936, C-33.
2. CURB RAMPS MUST CONTAIN A DETECTABLE WARNING SURFACE THAT CONSISTS OF RAISED TRUNCATED DOMES COMPLYING WITH SECTION 7.05 DETACHABLE WARNINGS OF THE TEXAS ACCESSIBILITY STANDARDS (TAS). THE SURFACE MUST CONTRAST VISUALLY WITH ADJOINING SURFACES, INCLUDING SIDE FLARES. FURNISH DARK BROWN OR DARK RED DETECTABLE WARNING SURFACE ADJACENT TO UNCOLORED CONCRETE,UNLESS SPECIFIED ELSEWHERE IN THE PLANS.
3. DETECTABLE WARNING SURFACES MUST BE SLIP RESISTANT AND NOT ALLOW WATER TO ACCUMULATE.
4. ALIGN TRUNCATED DOMES IN THE DIRECTION OF PEDESTRIAN TRAVEL WHEN ENTERING THE STREET.
5. SHADED AREAS INDICATE THE APPROXIMATE LOCATION FOR THE DETECTABLE WARNING SURFACE FOR EACH CURB RAMP TYPE.
6. DETECTABLE WARNING SURFACES SHALL BE A MINIMUM OF 24" IN DEPTH IN THE DIRECTION OF PEDESTRIAN TRAVEL.
7. DETECTABLE WARNING SURFACES SHALL BE LOCATED SO THAT THE EDGE NEAREST THE CURB LINE IS A MINIMUM OF 6" AND A MAXIMUM OF 10" FROM THE EXTENSION OF THE FACE OF CURB. DETECTABLE WARNING SURFACES MAY BE CURVED ALONG THE CORNER RADIUS.
8. SINGLE TILE PLATES COLONIAL RED COLOR.

GENERAL NOTES:

1. CONCRETE TO BE CITY OF MIDLAND CLASS "A" WITH A MINIMUM 28 DAY COMPRESSION STRENGTH OF 3000 PSI. USE FIBER REINFORCED CONCRETE THROUGHOUT.
2. MATERIALS AND CONSTRUCTION METHODS TO CONFORM TO THE CITY OF MIDLAND STANDARDS AND SPECIFICATIONS UNLESS OTHERWISE DIRECTED BY ADA STANDARDS AND RESOURCES.

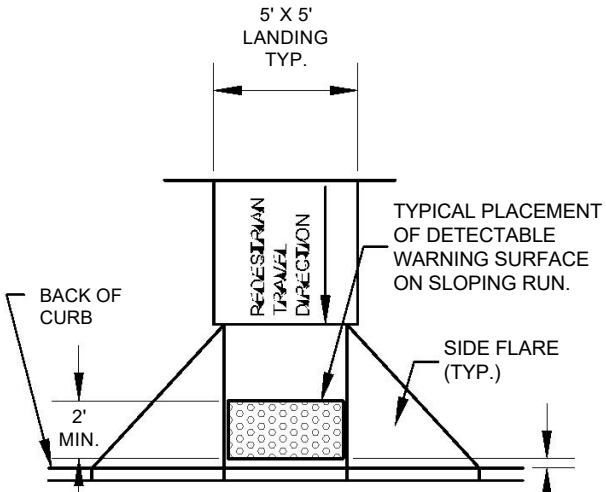

PERPENDICULAR CURB RAMP

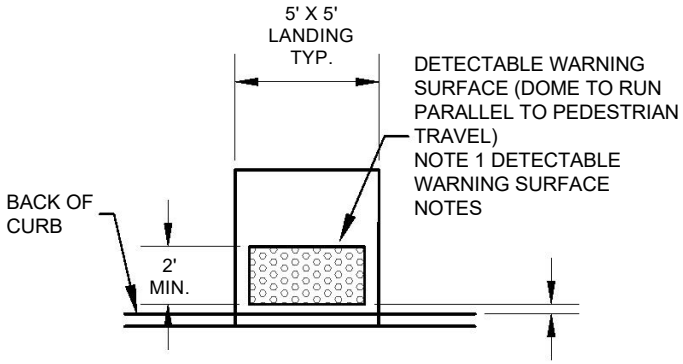

TRUNCATED DOME PATTERN

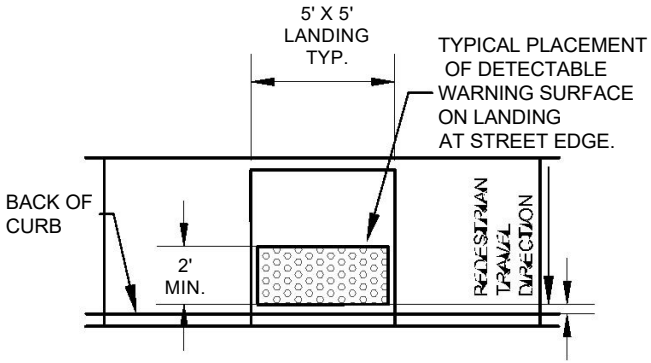

PARALLEL CURB RAMP

38

MIDLAND Engineering Services	DRAWN: DPM CHECKED: JCF APPROVED: MCC	EFFECTIVE DATE: 10/01/2018	SCALE: NTS	DETAIL:
		DETECTABLE WARNING SURFACE		233

CITY OF MIDLAND, TEXAS
TRAFFIC SIGNAL DESIGN

BIG SPRING STREET AT LONE STAR LANE

JANUARY 2023

PROJECT MAP

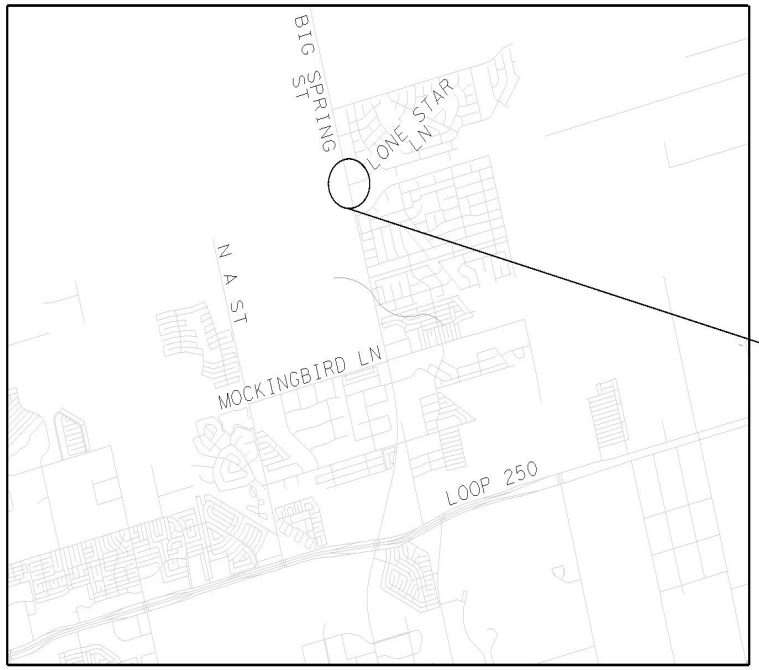

LOCATION MAP

N. T. S.

PLAN INDEX

SHEET NO.

1	COVER SHEET
2	GENERAL NOTES - 1 OF 3
3	GENERAL NOTES - 2 OF 3
4	GENERAL NOTES - 3 OF 3
5	QUANTITY SUMMARY
6	REMOVALS AND PROPOSED RAMPS
7	TRAFFIC SIGNAL LAYOUT
8	TRAFFIC SIGNAL QUANTITIES AND DETAILS - 1 OF 3
9	TRAFFIC SIGNAL QUANTITIES AND DETAILS - 2 OF 3
10	TRAFFIC SIGNAL QUANTITIES AND DETAILS - 3 OF 3
11	DRIVEWAY LAYOUT
12-62	TxDOT STANDARDS
63-64	CITY OF MIDLAND STANDARDS

1/25/2023

STATE OF TEXAS
THOMAS W HARTMANN
109948
LICENSED
PROFESSIONAL ENGINEER

1/25/2023

STATE OF TEXAS
JESUS J. SAENZ
135270
LICENSED
PROFESSIONAL ENGINEER

PLANS PREPARED BY:

Kimley»Horn
TBPE FIRM F-928

13455 Noel Road
Two Galleria Office Tower, Suite 700
Dallas, Texas 75240
CONTACT: THOMAS W. HARTMANN, P.E.

PACKET

All construction will require compliance to City of Midland Standards and
Specifications, TxDOT Standard Specifications and Standard Plans, and Texas Manual on Uniform Traffic Control Devices.

PLOTTED: 1/25/2023
FILENAME: K:\DAL_TPTO\project\064465334 - Midland 349 & Lone Star Signal Design\CADD\Midland_SHT001_cover_sheet.dgn
1544.8356 ft / in.
BY: Lucy.Cunningham

GENERAL NOTES:

TRAFFIC SIGNAL INSTALLATION
****

Underground utilities may be present within the right-of-way on this project. For signal, illumination, surveillance, and communication and control, contact both the City Utilities Department and Transportation Division for locates a minimum of 48 hours in advance of excavation. The locations of all signal related items, pavement markings, signing, etc. are diagrammatic **only** and may be shifted to accommodate field conditions with approval from the Engineer.

Unless otherwise indicated in the plans or specifications, all work shall conform to the standards, details, and specifications of the City of Midland.

Item 6: Control of Materials
Restrict storage of equipment and material to approved areas. The Engineer will not approve storage in any City yard. Promptly and properly dispose of any waste generated from servicing equipment on the project.

Item 7: Legal Relations and Responsibilities
Utilities (public, private, City, and TxDOT) exist throughout the project. Prior to any excavation, investigate to determine the utility locations within the project right-of-way. Contact the TxDOT Odessa Traffic Operations shop at 432-498-4690 to investigate and determine the location of any TxDOT utility that may exist within the project right-of-way. Contact the City of Midland to investigate and determine the location of any City utility that may exist within the project right-of-way.

Exercise caution when excavating in areas where investigations have determined that utilities exist.

Item 8: Prosecution and Progress
Maintain ingress and egress to side streets and private property at all times. Working days will be computed and charged in accordance with Article 8.3.1 .4. "Standard Workweek". Do not disturb natural vegetation and trees wherever possible.

Item 100: Preparation of Right of Way
It is the intent on the plans to prepare only that portion of the right of way necessary for construction. Do not disturb natural vegetation and trees wherever possible. ROW clearing shall be performed utilizing a forestry mulcher or similar equipment as approved by the engineer to minimize soil disturbance.

Item 105: Removal of Treated and Untreated Base and Asphalt Pavement
Saw cut and remove existing asphaltic pavement by an approved method.

Item 110: Excavation
Broom the existing base or subgrade to remove any loose material dropped during excavation operations. This work is considered subsidiary to this item.

Before excavation and embankment operations begin, windrow all topsoil (approx. 4 inches) to be reused on side slopes or behind the proposed curb and gutter. This work is subsidiary to Item 110, "Excavation" and Item 132, "Embankment".

Excavate only the volume of material that can reasonably be replaced with new HMAC within 24 hours of removal based on anticipated production rates. The Engineer may halt further excavation if any excavated volumes have not been replaced with HMAC within 48 hours of excavation.

Item 132: Embankment
For all material with a plasticity index of less than 20, use test method Tex-113-E in lieu of test method Tex-114-E for determining the percent of density. Material quality test requirements will be waived for material excavated from the right of way on this project and utilized in embankment.

Type X embankment material shall meet testing requirements of Type A with the exception that the specification limit for PI is between 6 and 15, and no more that 15% of the total aggregate may be field sand or other uncrushed fine aggregate.

Item 416: Drilled Shaft Foundations
The Inspector, together with the Contractor, will calculate the vertical signal head clearance before placing any traffic signal pole foundation.
Notify the Inspector 48 hours prior to forming and placing concrete in any of the signal pole and controller foundations. Do not place concrete without an Inspector present. Failure to inform the Inspector and provide adequate time to arrive on the job site may result in removing and replacing the foundation.

Install a 5/8"x 10' copper clad ground rod in each traffic signal pole foundation. The ground rod for each foundation will protrude above the finish grade of the foundation a minimum of 1" and a maximum of 2".

Provide a smooth finish for all portions of drill shafts extending above proposed ground. Include cost for this work in the unit bid price for this item.

Traffic signal pole foundations will be paid for once regardless of extra work caused by obstructions. Concrete removal required for installation of drilled shaft will be subsidiary to Item 416. For drilled shaft foundations for traffic signal poles, provide Class "C" concrete with 6-1/2" slump for dry type placement in accordance with Table 2, Slump Requirements.

Per City of Midland, extend height of drilled shafts for 20 feet of clearance from crown of road to bottom of signal heads on Big Spring Street.

Item 421: Hydraulic Cement Concrete
Furnish mix designs to the Engineer at least 48 hours prior to placing concrete. Provide an approved Private Laboratory Contractor to perform the needed concrete testing.

Furnish a job site curing tank equipped with a recording thermometer with the capability to chart temperatures for 24 hours, 7 days, or 30 days. Furnish the engineer with copies of the temperature records.

Furnish disposable 4" cylinder molds and cups that meet testing tolerances. The City will provide strength testing equipment for acceptance testing.

Within seven (7) days after concrete has been placed for foundations for traffic signals, roadway illumination assemblies, or high mast illumination assemblies, provide a rub finish for exposed surfaces in accordance with Item 427, Surface Finishes for Concrete.

Furnish Type II or IP cement for cast in place concrete.

All plants and trucks will be inspected and approved by the Engineer in lieu of the NRMCA or non-department engineer sealed certifications. The criteria and frequency of the engineer approval of plants and trucks is the same used for NRMCA certification.

Item 427: Surface Finishes for Concrete
Provide a surface area 1 rub finish for all concrete structures with the exception of abutments.

Item 449: Anchor Bolts
Prior to installation of nuts, coat the entire length of exposed anchor bolt threads for traffic signal poles, roadway illumination poles, high mast illumination poles, or overhead sign support structures with Crouse-Hinds tl-2, 0-z Gedney Stl, or Thomas & Betts Kopr-Shield compound electrically conducting protective thread lubricant.

Item 502: Barricades, Signs and Traffic Handling
Use Temporary Traffic Control (TTC) for this project as detailed on the latest Texas Department of Transportation BC standard plan sheets, and WZ (BTS-1 and BTS-2)-13, as provided for in Part VI of the Texas Manual on Uniform Traffic Control Devices, and as indicated on the title sheet. In addition to the TTC and the latest WZ standard plan sheets, install barricades and warning signs, as appropriate, to adequately warn motorists. Permanent signs may be installed when construction in an area is complete and they will not be in conflict with the traffic control plan for the remainder of the job.

Existing signs are to remain as long as they do not interfere with construction and they do not conflict with the traffic control plan.

When traffic is obstructed, arrange warning devices in accordance with arrangements indicated in the latest edition of the Texas Manual on Uniform Traffic Control Devices. When advanced warning flashing arrow panels and/or changeable message signs are specified, have one standby unit in good condition at the job site.

Cover or remove any work zone signs when work or condition references is not occurring.

No work will be permitted to commence on the road before sunrise and shall be arranged so that all machinery and/or equipment shall be away from the roadway near the R.O.W. line after sunset. Any operations requiring lane closures shall not begin before 9:00 A.M. or continue past 4:00 P.M.
Do not place barricades, signs, or any other traffic control devices where they interfere with sight distance at driveway or side streets. Provide access to all driveways during all phases of construction. Attention is called to the fact that allocations used for storing construction equipment and material of any type within the right of way shall be approved by the Engineer.

Use of the right of way for these purposes will be restricted to those locations where driver sight distance to businesses and side street intersections is not obstructed and at other locations where an unsightly appearance, as determined by the Engineer, will not exist. Remove any obstructions to existing drainage due to the Contractor's operations a required at the Contractor expense.

Item 506: Temporary Erosion, Sedimentation, and Environmental Controls
It is not anticipated that erosion control devices will be needed on this project. In the event that devices are needed, the storm water pollution prevention plan shall consist of using the following items and/or items as directed by the Engineer. Payment for the work may be determined in accordance with Article 4.2, "Changes in the Work".

- Biodegradable erosion control logs

Item 529: Concrete Curb, Gutter, and Combined Curb And Gutter
Use and place approved expansion joint material between the existing curb and the proposed curb and at least every 50 feet in the proposed curb sections. Use polypropylene fiber reinforcing when required at a rate of 1.5 lbs./cy in lieu of wire reinforcing.

Polypropylene fibers may not be used in lieu of reinforcing steel. After construction, restore the adjacent surface to a condition approved by the Engineer. Consider this work subsidiary to this bid item.

Item 530: Intersections, Driveways, and Turnouts
Reinforce concrete driveways with no. 3 bars spaced at 12" O.C.B.W. or with #4 bars spaced at 18" O.C.B.W. Surface treat turnouts before the roadway is treated with the second one course surface treatment.

1/25/2023
STATE OF TEXAS
THOMAS W HARTMANN
109948
LICENSED
PROFESSIONAL ENGINEER

Kimley»Horn
F-928
13455 Noel Road
Two Galleria Office Tower, Suite 700
Dallas, Texas 75240
tel. No. (972) 770-1300
Fax No. (972) 239-3820

MIDLAND
Feel the Energy!

GENERAL NOTES

SHEET 1 OF 3
TxDOT PROJECT NUMBER: 064465334
SCALE: AS SHOWN
DATE: 1/25/2023

DESIGN	GRAPHICS	CHECK
TWH	LRC	TWH

2

PLOTTED: 1/25/2023
FILENAME: K:\DAL_TPTO\projects\064465334 - Midland 349 & Lone Star Signal Design\Cadd\Midland_SHT002_general notes (1 of 3).dgn
40.0000 ft / in.
By: Lucy.Cunningham

Polypropylene fiber may not be used in lieu of reinforcing steel. In addition to reinforcing steel, polypropylene fiber is required at a rate of 1.5 lbs./cy.

Item 531: Sidewalks
The curb ramp locations shown in the plans have taken into account the geometric features of the intersection, traffic signals, and the pavement markings. If anything changes during construction, the location of curb ramps must be adjusted to ensure they meet TAS/ADAAG requirement.

Item 618: Conduit
Place a single continuous piece of warning tape in accordance with this item along the entire length of each underground conduit installation. Locate warning tape approximately twelve inches above conduit as indication that a buried electrical line exists below the tape. Cement stabilized backfilled conduit is exempt from this requirement.

Comply with warning tape requirement for any installation of buried conduit, including portions of conduit located outside of cement stabilized backfill. When trenched conduit is proposed beneath roadways under construction, install conduit after grading operations have been completed and before any surfacing begins at that location.

When shown on the plans as bored conduit, install conduit by an approved directional boring method.

Maintain a minimum 24" depth from finish grade to top of conduit for conduit proposed beneath pavement. Use an approved ditching method. Place and backfill conduit proposed beneath existing pavement in accordance with the section shown in the plans. Schedule and complete work so that all lanes are open to traffic at night.

For conduit raceways that are intended to remain empty or unused, extend the lower end of conduit from the face of the foundation to a minimum of 1' beyond the edge of the foundation or the riprap apron, whichever is farthest, and use conduit cap fittings for both ends of conduit. Do not glue caps or use duct tape when capping ends of conduit raceways that are intended to remain empty. Prevent dirt and debris from entering raceways during construction by temporarily capping both ends of open raceways. Other than conduit raceways that are intended to remain unused, fit each exposed end of raceways with a bushing. Where steel raceway is used, install a ground-type bushing and connect the bushing and ground rod with a bonding jumper.

The locations of conduit are diagrammatic only and may be shifted to accommodate field conditions as directed.

Item 620: Electrical Conductors
Terminate all electrical conductors from the controller at the termination block in the traffic signal pole hand hole whether in use or not.

All wiring not covered by the plans and specifications shall be in accordance with the National Electric Code (NEC). When the specification for electrical items require a UL listed product, it will be constructed to mean UL listed or CSA listed. Bond together any grounding conductors that share the same conduit, junction box, ground box, or structure at every accessible point in accordance with the National Electrical Code (NEC).

Item 624: Ground Boxes
Locations of ground boxes are approximate. Final location will be as approved. Provide an apron for ground boxes as shown on Standard ED (4)-14. Slack conductors required by Standard Sheet ED (3)- 14 will be subsidiary to Item 624. Concrete removal required for installation of ground boxes will be subsidiary to Item 624.

Item 628: Electrical Services
Contact the Electric Utility Company to make all necessary arrangements to provide power for the electrical service shown on the plans in accordance with Article 628.5 and the Electrical Details, except that the City of Midland will make application to the Electric Utility Company for service. Before fabricating the electrical service, contact the City of Midland Signal Shop Supervisor (phone 432-685-7928) to make application (billing arrangements) for service with the Electric Utility Company.

Physically identify the location for each proposed electrical service on the project, and request the physical address for each proposed electrical service identified; the Engineer will provide the physical address for each respective location. Permanently mark the physical address of any proposed electrical service on the respective meter base lid.

Use one of two methods for permanent marking. For the preferred method of marking, use an approved die-stamp, with a minimum ½ height or alpha-numeric characters and stamp physical address on meter base lid. After stamping, apply coating of zinc-rich paint to the tamped area. Do not damage meter base. Replace meter base if determined by the engineer as damaged or unacceptable. No additional compensation will be made for replacement of meter bases in the event that an unacceptable determination is made. When approved, use an alternate method of marking by providing a brass or aluminum plate tag with the physical address embossed by a machine-stamp process. Affix this tag to the meter base by a method approved by the engineer. Provide a sample of a stamped plate tag for approval of this alternate method. The permanent physical address is required to be marked on the meter base prior to initiation of electrical service. Materials, labor, tools, equipment and incidentals necessary to complete this, work will be considered a subsidiary to Item 628, Electrical Services.

Service enclosures and photocells from pre-approved sources will not be subject to the catalog cut sheet requirements of electrical detail standards. Notify the Engineer when pre-approved service enclosures and/or photocells will be supplied, and provide written documentation of manufacturer, brand, type, and model of service enclosure to be used prior to beginning any electrical service construction. For incidental material and parts necessary for construction of electrical services, including the service entrance weather-head, rigid metal conduit (RMC) and PVC conduit, conduit fittings, service conductor, circuit breakers, ground rod and clamp, grounding bushing (s), and mounting hardware including straps and channel bracket for conduit support, furnish products and/or materials that comply with the plans and specifications. Prior to construction of any electrical service, submit to the Engineer respective catalog cut sheets for incidental materials and parts.

Electrical services conducted or parts which do not comply with the specifications will be cause for rejection of a portion or all of the work.

Use sixteen (16) inch diameter foundations with 4 ~ #5 bars and a #2 spiral or eighteen (18) inch diameter foundation with 4 ~ #6 bar and a #2 spiral for electrical service. Foundation lengths shall be a shown in the plan. Anchor bolts for either foundation shall be ¾" x 18" x 4". Install photocell(s) facing north when practical.

Item 644: Small Roadside Sign Supports and Assemblies
All new sign support for stop and yield signs will have a 12" red strip of Type C high specific intensity reflective tape. Place the top of the tape 4' above the edge of the roadway. This work will not be paid for directly and will be subsidiary to the pertinent bid item.

For standard small sign details and dimensions, refer to the Standard Highway Sign Designs for Texas (SHSD): a supplement to the Texas Manual on Uniform Traffic Control Devices (TMUTCD).

Mark and locate existing reference marker perpendicular to the road and along the right of way, or as directed, prior to removal. Erect new reference marker at the original location, upon completion of construction. Prior to taking elevations to determine lengths for fabrication of sign posts, obtain verification of all proposed locations.

All sign supports and assemblies installed as part of this project shall conform to TxDOT Standard Item 644.

Item 656: Foundations for Traffic Control Devices
Install a 5/8" x 8' copper clad ground rod in all signal poles and signal controller foundations and make a system ground connection at the ground rod in addition to the ground connection required by the standard sheet, "Traffic Signal Controller Slab and Base". Maintain two inches (2") of ground rod extension above the finish surface of the foundation. Material, labor, tools, and incidentals necessary to provide and install this ground rod are considered subsidiary to the various bid items.

Foundations for traffic signal controller cabinet is subsidiary to Items 680.

Before placing the concrete for the controller foundation, coordinate with the City of Midland to ensure that the anchor bolt pacing will match the anchor bolts and cabinet supplied by the City.

Form a 3/4-inch chamfer on the top edge of each pedestal pole foundation. Probe for utilities and underground structures prior to drilling foundations. Foundations shall be paid for once regardless of extra work caused by obstructions. Location of foundations shown on the plans are for diagrammatic purposes only and may be varied to meet local conditions, subject to approval. Stake these locations and have them approved by the Inspector before installation of foundation.

Item 666: Retroreflectorized Pavement Markings
Type I markings shall meet the minimum retroreflectivity values defined by Article 4.4 Retroreflectivity Requirements.

This Contract totals more than 200,000 feet of pavement markings; use a mobile retroreflectometer for retroreflectivity measurements. Portable retroreflectometers may not be used for this Contract.

Place Type I pavement markings with a ribbon-gun application.

Measure thickness for markings in accordance with Tex-854-B using usage rates (Part II).

Item 672: Raised Pavement Markers
Do not place raised pavement markers until the micro-surfacing has cured a minimum of 48 hours.

Item 677: Eliminating Existing Pavement Markings and Markers
Remove pavement markers by a method which causes the least damage to the pavement surface. All work for the elimination of existing pavement marking and markers shall conform to TxDOT Standard Item 677.

Item 680: Installation of Highway Traffic Signals
Notify the City of Midland Traffic Engineer at 432-685-7280 one week before beginning any work involving traffic signals.

This project shall consist of the installation of all of the materials necessary for complete signal systems as follows:

1. Wire the signal installation to operate in accordance with phase diagrams in the plans. Timing and phasing will be changed and maintained by the City of Midland Traffic Engineering Group. A copy of all revisions to the original timing and phasing plans will be delivered to the City of Midland Traffic Engineering group, and one copy is to stay in the controller cabinet at the completion of the project.
2. Provide an approved technician who is available at all times by an on-call basis for maintenance of any installed signal equipment during the period of time in which installed signals are operating, including the test period for this project.
3. Provide a minimum length of 24" for each signal cable in each pull box and signal pole. All conductors are to be continuous without splice between terminals.
4. The City of Midland will supply all equipment for Opticom emergency vehicle systems. The City will install Opticom equipment in the controller cabinet. Contractor will install Opticom cable and proposed detectors on signal mast arms or poles. Work on incidentals necessary to install Opticom system equipment will be considered subsidiary to various bid items. Opticom system quantities for contractor information only are approximate and as follows:
    - Opticom Model 3100 Radio/GPS Receiver Module - I EA
    - Opticom detector cable - 1000 LF

1/25/2023
STATE OF TEXAS
THOMAS W HARTMANN
109948
LICENSED
PROFESSIONAL ENGINEER

Kimley»Horn
F-928
13455 Noel Road
Two Galleria Office Tower, Suite 700
Dallas, Texas 75240
Tel No. (972) 770-1300
Fax No. (972) 239-3820

MIDLAND
Feel the Energy!

GENERAL NOTES

SHEET 2 OF 3
TxDOT PROJECT NUMBER: 064465334
SCALE: AS SHOWN
DATE: 1/25/2023

DESIGN	GRAPHICS	CHECK
TWH	LRC	TWH

3

PLOTTED: 1/25/2023
FILENAME: K:\DAL_TPP\projects\064465334 - Midland 349 & Lone Star Signal Design\Cad\Midland_SHT003_general notes (2 of 3).dgn
40.0000 ft / in.
BY: Lucy.Cunningham

5. Replace any LEDs that fail during the thirty (30) day test period in a timely manner. Equipment and incidentals necessary for replacement of failed LEDs are considered subsidiary to the various bid items and will not be paid for directly.
6. Initially operate traffic signals at new locations in flash mode until such time as is approved so that phase sequencing may be initiated.
7. Provide submittal literature for all traffic signal equipment before installation. Equipment will not be accepted for delivery and payments will not be made until the equipment, materials lists, and shop drawing have been approved by the Engineer. Approval by the Engineer does not relieve the Contractor of his responsibilities to meet the requirements of the specifications and plans. All submittal literature shall be approved and verified for all the furnished traffic signal equipment prior to its installation.
8. Furnish and install all required materials and equipment necessary for the complete and operating traffic signal installation.
9. Accomplish the erection of poles and luminaires located near any overhead electrical lines using established industry and utility safety practices. Consult with the appropriate utility company before beginning such work.
10. The locations shown on the plans for controller foundations, conduit, and other items may be adjusted to better fit field conditions as approved, due to conflicts with utilities.
11. Provide vibration dampers for mast arms 28 feet long and longer. Use dampers l8"x48" for arms up to 48 feet long, and l6"x66" for longer mast arms. Install using Astra-Brac, Signfix aluminum channel, or equal, at a maximum of 3 feet from the end of the mast arm.
12. Provide a qualified technician on the project site to place the traffic signals in full operation.
13. Install the City of Midland supplied equipment listed below:

CITY OF MIDLAND CONTROLLER		
1	Provided by City	NEMA TS2 Type 2 Cabinet
1	Provided by City	Battery Backup Unit
1	Provided by City	Intelight Controller
1	Provided by City	MMU2-LEip
1	Provided by City	Conflict Monitor
6	Provided by City	Traffic Signal Poles
4	Provided by City	ILSN Signs
2	Provided by City	Flashing Yellow Arrow Signs
1	Provided by City	PTZ Camera
4	Provided by City	Radar Detectors
1	Provided by City	Opticom System

Contact the City of Midland Signal Shop Supervisor at (432) 685-7928 to coordinate a pickup time.

14. The City of Midland will not assume responsibility for the maintenance of the traffic signals until the project is completed and accepted.
15. Place the traffic signal into operation only after all required striping is complete and all conflicting signing is removed.
16. Project Inspection: For electrical project inspection, contact the City of Midland Signal Shop in advance of needed inspections. At the time of the final electrical inspection, the City of Midland will create a punch list of discrepancies to be corrected before signal is put into flash mode.
17. Signal Turn-On: Notify the City of Midland Signal Shop Supervisor approximately 48 hours in advance of the signal turn on. Signal technicians from the City of Midland must be present when the signals are placed in full operation. Unless otherwise directed, place the signal in full operation between 9:00 AM. - 12:00 (NOON) on Mondays, Tuesdays, or Wednesdays only.
18. During the thirty-day test period, the City of Midland Signal Shop will be the First Responders to all trouble calls. They will, in turn, contact the Contractor. Provide qualified personnel to respond to these and all trouble calls. Repair and diagnose any malfunctions to signal equipment supplied for the project. Provide a telephone number, not subject to frequent changes and available to receive calls on a 24-hour basis. Respond to reported calls within a reasonable travel time, (i.e. from a Midland address), but not more than 2 hours maximum. Make appropriate repair within 24 hours. Place a logbook in the controller cabinet and keep a record of each trouble call reported. Notify the Engineer of each trouble call. The error log in the conflict monitor shall not be cleared during the thirty-day test period without approval. If it is necessary to replace equipment, such as a controller, in order to return the signals to normal operation, the City of Midland will replace the equipment with loaned equipment until the original equipment is repaired and then replaced.
19. The battery back-up will be installed with the controller on the concrete pad paid for under Item 680. If a larger pad is needed to accommodate the battery back-up, the additional labor and material will be subsidiary to this item.

Item 682: Vehicle and Pedestrian Signal Heads
Use aluminum signal heads and components for this project. Provide all signal heads from the same manufacturer. Install signal head attachments so that the wiring to each signal head passes from the mast arm through the attachment hardware to the signal head. Do not leave cable or wiring exposed.

Provide signal head attachments that allow for adjustment about the horizontal and vertical axis.

Provide aluminum pedestrian and vehicle signal heads in the following color: Federal Yellow #13538 of Federal Standard 595. Provide non-painted aluminum tubing. Provide back plates, louvers, and the inside of visors with a flat black finish. Provide aluminum vented back plates for all traffic signal heads. Provide back plates with yellow retroreflective border.

Turn down signal heads or cover with burlap or other material, as approved, until traffic signals placed in operation. Mount signal heads level and plumb.

Provide louvers that have 5 vanes and a flat black finish on the inside surfaces. Securely fasten a hardware cloth screen with 5/8 inch or smaller mesh size to the front face of each louver to prevent entry by birds. Provide all LED traffic signal lamp units. as well as the various components of the signal heads to be installed within this project.

Item 684: Traffic Signal Cables
Include extra cable length in each run to provide adequate slack at each ground box, foundation, and signal head. Identify each cable as shown on the plans (cable 1, etc.) with pre-numbered identification tags of plastic, tape, or marking labels at each signal head, ground box, terminal block, pole base, and controller.

All cable shall be continuous without splices from terminal point to terminal point or as directed or approved. All proposed signal cable and number of conductors required shall be as shown on the plans. Terminate all electrical conductors from the controller at the termination block in the signal pole hand hole, whether in use or not.

Provide an extra 10' for each cable terminating in the controller cabinet. All cables shall be continuous without splices from terminal point to terminal point. Provide stranded 14 AWG Type A signal cables. Provide 12 AWG Type C signal cables for Accessible Pedestrian Signal Unit. Provide the number of conductors as shown on the plans.

Item 686: Traffic Signal Pole Assemblies (Steel)
City of Midland to provide all traffic signal pole assemblies.

Mark pole shafts and mast arms with the identification numbers from the plans to facilitate field-assembly. Identify pole shafts and mast arms by intersection for projects with multiple intersections.

Provide nuts on top and bottom (double nuts) of the base plate as shown on the plans. Set anchor bolts for mast arm signal poles and strain poles so that two are in tension and two are in compression. Obtain approval of anchor bolt placement before placing concrete.

Use the traffic signal pole heights and mast arm lengths shown on the plans and in the material summary for bidding purposes only. Make field measurements to determine the actual pole height and mast arm length required. Provide vertical clearance of 17 to 19 feet from the roadway to the lowest point of the signal head or mast arm. Place signal heads 40 feet minimum and 180 feet maximum from the stop line. If the nearest signal is more than 180 feet from the stop line, place a supplemental near-side signal head. Determine the field measurements and elevations from the actual field location of the poles, considering all above and below ground utilities and existing roadway elevations.

Provide vibration dampers for mast arms 28 feet long and longer. Use dampers 18"x48" for arms up to 48 feet long, and 16"x66" for longer mast arms. Install using Astro-sign Brac, Signfix aluminum channel, or equal, at a maximum of 3 feet from the end of the mast arm.

Item 688: Pedestrian Detectors and Vehicle Loop Detectors
At intersections where a minimum of 10 ft. spacing between adjacent accessible pedestrian signal units is not possible, each accessible pedestrian push button must be provided with the following features:

- A push button locator tone,
- A tactile arrow,
- A speech walk message for the walking person indication and
- A speech push button information message.

Item 3076: Dense-Graded Hot-Mix Asphalt
Binder:
Provide a binder with a Performance Grade of 70-22(PG 70-22) for the Type B mix.

Aggregate quality:
Furnish Class B aggregate for the Type B mix. Furnish aggregates that meet sac requirements for the shoulders and/or ramps. Magnesium sulfate soundness loss will not be greater than 20 when class "A" aggregate is required.

Mixture design:
The target laboratory molded density for mix will be xx.x percent. Test method Tex-530-C (Boil Test) will not be required.

Placement:
Semi-trailer type vehicles are prohibited from dumping directly into the finishing machine for the finished surface unless the trailer is equipped with an auger slatted chain or another approved conveyor. No more than 10% RAP will be allowed in the non-surface course. No RAS will be allowed. Mineral filler will not be allowed. Lime will not be allowed as an anti-stripping agent.

Item 6001: Portable Changeable Message Sign
Location(s) and duration for PCMS shall be as directed by the Engineer; PCMS shall be placed in operation a minimum of one (1) week prior to construction.

Item 6025: Radar Presence Detection System
The Contractor shall furnish and install the Wavetronix™ radar detection system. The Contractor shall install, aim, and program all detectors (including detector cable) as shown on the plans per City detail. The Contractor shall refer to plans for radar detection zone placement. The Contractor shall have previously completed installation training provided by the Radar Detection System Manufacturer or make arrangements for the Manufacturer to install and calibrate the system.

A 4 channel back plate is required for presence detection (RPDD).

1/25/2023
STATE OF TEXAS
THOMAS W HARTMANN
109948
LICENSED
PROFESSIONAL ENGINEER

Kimley»Horn
F-928
13455 Noel Road
Two Galleria Office Tower, Suite 700
Dallas, Texas 75240
Tel No. (972) 770-1300
Fax No. (972) 239-3820

MIDLAND
Feel the Energy!

GENERAL NOTES

SHEET 3 OF 3
TxDOT PROJECT NUMBER: 064465334
SCALE: AS SHOWN
DATE: 1/25/2023

DESIGN	GRAPHICS	CHECK
TWH	LRC	TWH

4

PLOTTED: 1/25/2023
FILENAME: K:\DAL_TPP\projects\064465334 - Midland 349 & Lone Star Signal Design\Cad\Midland_SHT004_general notes (3 of 3).dgn
40.0000 ft / in.
By: Lucy.Cunningham

BIG SPRING ST AT LONE STAR LN				
ITEM	CODE	DESCRIPTION	UNIT	QUANTITY
104	6022	REMOVING CONC (CURB AND GUTTER)	LF	122
105	6096	REMOV STAB BASE AND ASPH PAV (0"-12")	SY	271
247	6230	FL BS (CMP IN PLACE) (TY A GR 1-2) (8")	SY	202
416	6032	DRILL SHAFT (TRF SIG POLE) (36 IN)	LF	26
416	6034	DRILL SHAFT (TRF SIG POLE) (48 IN)	LF	50
500	6001	MOBILIZATION	LS	1
502	6001	BARRICADES, SIGNS AND TRAFFIC HANDLING	MO	2
529	6029	CONC CURB & GUTTER (TY A)	LF	115
530	6010	INTRSCT, DRVWAYS, & TURNOUT (CONC)	SY	145
531	6003	CONC SIDEWALKS (6")	SY	19
531	6010	CURB RAMPS (TY 7)	EA	2
552	6001	WIRE FENCE (TY A)	LF	140
552	6005	GATE (TY 1)	EA	2
618	6023	CONDT (PVC) (SCH 40) (2")	LF	135
618	6029	CONDT (PVC) (SCH 40) (3")	LF	80
618	6033	CONDT (PVC) (SCH 40) (4")	LF	20
618	6034	CONDT (PVC) (SCH 40) (4") (BORE)	LF	400
618	6046	CONDT (PVC) (SCH 80) (2")	LF	10
620	6004	ELEC CONDR (NO.12) INSULATED	LF	170
620	6008	ELEC CONDR (NO.8) INSULATED	LF	630
620	6009	ELEC CONDR (NO.6) BARE	LF	605
620	6010	ELEC CONDR (NO.6) INSULATED	LF	210
624	6008	GROUND BOX TY C (162911)W/APRON	EA	5
628	6189	ELC SRV TY D 120/240 070(NS)SS(E)SP(U)	EA	1
644	6033	IN SM RD SN SUP&AM TYS80(1)SA(U)	EA	3
644	6076	REMOVE SM RD SN SUP&AM	EA	1
666	6036	REFL PAV MRK TY I (W)8"(SLD)(100MIL)	LF	170
666	6041	REFL PAV MRK TY I (W)12"(SLD)(090MIL)	LF	258
666	6047	REFL PAV MRK TY I (W)24"(SLD)(090MIL)	LF	122
666	6226	PAVEMENT SEALER 8"	LF	170
666	6228	PAVEMENT SEALER 12"	LF	258
666	6230	PAVEMENT SEALER 24"	LF	122
666	6231	PAVEMENT SEALER (ARROW)	EA	4
666	6232	PAVEMENT SEALER (WORD)	EA	2
668	6077	PREFAB PAV MRK TY C (W) (ARROW)	EA	4
668	6085	PREFAB PAV MRK TY C (W) (WORD)	EA	2
677	6001	ELIM EXT PAV MRK & MRKS (4")	LF	520
677	6007	ELIM EXT PAV MRK & MRKS (24")	LF	12
678	6004	PAV SURF PREP FOR MRK (8")	LF	170
678	6006	PAV SURF PREP FOR MRK (12")	LF	258
678	6008	PAV SURF PREP FOR MRK (24")	LF	122
678	6009	PAV SURF PREP FOR MRK (ARROW)	EA	4
678	6016	PAV SURF PREP FOR MRK (WORD)	EA	2
678	6033	PAV SURF PREP FOR MRK (RPM)	EA	22
680	6005	INS HY TRF SIG (DPT SUP CNT & CAB)(ISO)	EA	1
*	*	TRAFFIC SIGNAL CONTROLLER, CABINET AND BBU CABINET		
*	*	PICK UP AND INSTALL MAST ARM SIGNAL POLES		
*	*	FURNISH AND INSTALL REGULATORY SIGN PANELS ON SIGNAL EQUIPMENT		
*	*	CAT 5 ETHERNET		
*	*	INSTALLATION OF RADIO & PTZ		
*	*	INSTALLATION OF OPTICOM SYSTEM AND CABLES		
*	*	LED INTERNALLY ILLUMINATED STREET NAME SIGNS		
682	6001	VEH SIG SEC (12")LED(GRN)	EA	12
682	6002	VEH SIG SEC (12")LED(GRN ARW)	EA	2
682	6003	VEH SIG SEC (12")LED(YEL)	EA	12
682	6004	VEH SIG SEC (12")LED(YEL ARW)	EA	4
682	6005	VEH SIG SEC (12")LED(RED)	EA	12
682	6006	VEH SIG SEC (12")LED(RED ARW)	EA	4
682	6018	PED SIG SEC (LED)(COUNTDOWN)	EA	4
682	6051	BACKPLATE W/REFL BRDR(3 SEC)ALUM	EA	12
682	6053	BACKPLATE W/REFL BRDR(5 SEC)ALUM	EA	2
684	6007	TRF SIG CBL (TY A)(12 AWG)(2 CONDR)	LF	495
684	6031	TRF SIG CBL (TY A)(14 AWG)(5 CONDR)	LF	530
684	6033	TRF SIG CBL (TY A)(14 AWG)(7 CONDR)	LF	145
684	6046	TRF SIG CBL (TY A)(14 AWG)(20 CONDR)	LF	520
686	6040	INS TRF SIG PL AM(S)1 ARM(36')LUM&ILSN	EA	1
686	6048	INS TRF SIG PL AM(S)1 ARM(44')LUM&ILSN	EA	1
686	6058	INS TRF SIG PL AM(S)1 ARM(55')ILSN	EA	1
686	6060	INS TRF SIG PL AM(S)1 ARM(55')LUM&ILSN	EA	1
687	6001	PED POLE ASSEMBLY	EA	2
**	**	DRILL SHAFT (TRF SIG POLE) (24 IN)	LF	12
688	6001	PED DETECT PUSH BUTTON (APS)	EA	4
688	6003	PED DETECTOR CONTROLLER UNIT	EA	1
3076	6023	D-GR HMA TY-C PG70-22	TON	22
3076	6040	D-GR HMA TY-D PG70-22	TON	22
6292	6004	RVDS (PRESENCE DET ONLY) (INSTALL ONLY)	EA	2
6292	6006	RVDS (PRES AND ADV DET) (INSTALL ONLY)	EA	2
***	***	RADAR PRESENCE DETECTOR COMM CABLE	LF	1015

* SUBSIDIARY TO ITEM 680, FOR CONTRACTOR'S INFORMATION ONLY
** SUBSIDIARY TO ITEM 687, FOR CONTRACTOR'S INFORMATION ONLY
*** SUBSIDIARY TO ITEM 6292, FOR CONTRACTOR'S INFORMATION ONLY

1/25/2023

STATE OF TEXAS
THOMAS W HARTMANN
109948
LICENSED
PROFESSIONAL ENGINEER

Kimley»Horn
F-928
13455 Noel Road
Two Galleria Office Tower, Suite 700
Dallas, Texas 75240
tel. No. (972) 770-1300
Fax No. (972) 239-3820

MIDLAND
Feel the Energy!

SUMMARY OF QUANTITIES

TXDOT CSJ NUMBER: 064465334
SCALE: AS SHOWN
DATE: 1/25/2023

DESIGN	GRAPHICS	CHECK
TWH	LRC	TWH

5

PLOTTED: 1/25/2023
FILENAME: K:\DAL_TPTO\Project\064465334 - Midland 349 & Lone Star Signal Design\Cadd\Midland_SHT005_Summary of quantities.dgn
40.0000 ft / in.
By: Lucy.Cunningham

NOTES:

1. INSTALLATION AND PAYMENT FOR PROPOSED DRIVEWAY, RAMPS, AND SIDEWALKS SHALL INCLUDE ALL INCIDENTAL WORK, INCLUDING EXCAVATION, REMOVAL AND DISPOSAL OF EXISTING CONCRETE CURB AND SIDEWALK, PROPOSED CURB ALONG SIDEWALKS, AND OTHER MISCELLANEOUS MATERIAL NECESSARY TO CONSTRUCT THE PROPOSED DRIVEWAY, RAMPS, AND SIDEWALKS. SIDEWALK QUANTITIES PROVIDED ARE ESTIMATES ONLY. PAYMENT FOR SIDEWALK SHALL BE FOR THE QUANTITY CONSTRUCTED IN THE FIELD.
2. PROPOSED CURB RAMP LANDING SHALL BE POURED UP TO THE SIGNAL FOUNDATION, LEAVING NO GAPS.
3. THE INFORMATION SHOWN ON THESE DRAWINGS CONCERNING THE TYPE AND LOCATION OF UNDERGROUND UTILITIES IS NOT GUARANTEED TO BE ACCURATE OR ALL INCLUSIVE. BEFORE CONSTRUCTION, CONTRACTOR TO MAKE DETERMINATION AS TO THE TYPE AND LOCATION OF UNDERGROUND UTILITIES TO AVOID DAMAGE THERETO.
4. INSTALL BARRIER FREE RAMPS AS SHOWN ON THE PLANS. RAMP SLOPES SHALL MATCH AS SHOWN IN LEGEND. UNLESS OTHERWISE NOTED, CONCRETE SIDEWALK IN RAMP AREA SHALL NOT EXCEED 2% CROSS SLOPE OR 2% RUNNING SLOPE UNLESS OTHERWISE APPROVED BY THE ENGINEER. TIE PROPOSED RAMP AND SIDEWALK TO EXISTING SIDEWALK AS SHOWN ON THE PLAN.
5. CONTRACTOR SHALL ENSURE THAT ALL PED RAMPS DRAIN TOWARDS THE STREET WITHOUT PONDING IN THE RAMP OR GUTTER AREA.
6. CONTRACTOR SHALL REMOVE ALL EXISTING PAVEMENT MARKINGS THAT CONFLICT WITH THE PROPOSED PAVEMENT MARKINGS. SEE GENERAL NOTES (ITEM 677) FOR ADDITIONAL INFORMATION.

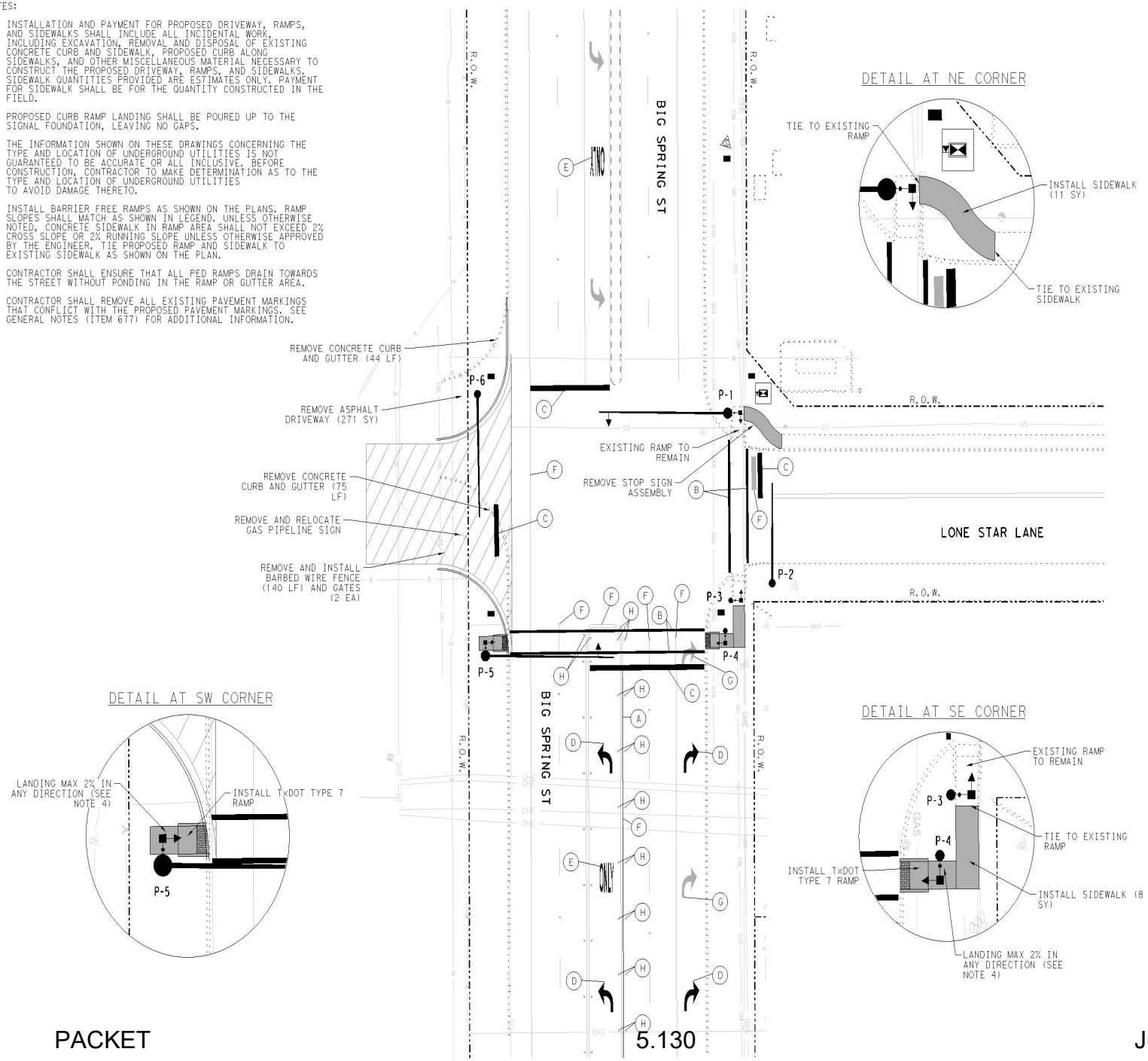

PEDESTRIAN RAMP DETAILS: SCALE: 1" = 20'

ORIGINALLY PLOTTED SCALE: SCALE: 1" = 40'

LEGEND
PEDESTRIAN RAMPS

- 8.3% MAX RUNNING SLOPE, 2% MAX CROSS SLOPE
- 5% MAX RUNNING SLOPE, 2% MAX CROSS SLOPE

LEGEND
PAVEMENT MARKING

- (A) REFL PAV MRK TY I (W)8"(SLD)(090MIL)
- (B) REFL PAV MRK TY I (W)12"(SLD)(090MIL)
- (C) REFL PAV MRK TY I (W)24"(SLD)(090MIL)
- (D) PREFAB PAV MRK TY C (W)(ARROW)
- (E) PREFAB PAV MRK TY C (W)(WORD)
- (F) REMOVAL OF PAVEMENT MARKING LINE
- (G) REMOVAL OF PAVEMENT MARKING (TY C)
- (H) REMOVAL OF RAISED PAVEMENT MARKER

1/25/2023

STATE OF TEXAS
THOMAS W HARTMANN
109948
LICENSED PROFESSIONAL ENGINEER

Kimley»Horn
F-928
13455 Noel Road
Two Galleria Office Tower, Suite 700
Dallas, Texas 75240
tel No. (972) 770-1300
Fax No. (972) 239-3820

MIDLAND
Feel the Energy!

REMOVALS AND PROPOSED RAMPS/MARKINGS

TXDOT CSJ NUMBER: 064466334
SCALE: AS SHOWN
DATE: 1/25/2023

DESIGN	GRAPHICS	CHECK
TWH	LRC	TWH

6

PLOTTED: 1/25/2023
FILENAME: R:\DAL_TPP\projects\064465334 - Midland 349 & Lone Star Signal Design\Cadd\Midland_SHT096_p_ramps.dgn
40.0000 ft / in.
By: Lucy.Cunningham

NOTES:

1. THE INFORMATION SHOWN ON THESE DRAWINGS CONCERNING THE EXISTING TRAFFIC SIGNAL HARDWARE, PAVEMENT MARKINGS, SIGNING, RIGHT-OF-WAY, AND THE TYPE AND LOCATION OF UNDERGROUND UTILITIES IS NOT GUARANTEED TO BE ACCURATE OR ALL INCLUSIVE. BEFORE CONSTRUCTION, CONTRACTOR TO MAKE DETERMINATION AS TO THE TYPE AND LOCATION OF UNDERGROUND UTILITIES TO AVOID DAMAGE THERETO.
2. THE ENGINEER DOES NOT CONFIRM OR VALIDATE THE EXISTING ITEMS SHOWN.
3. CURB RAMP AND SIDEWALK REMOVALS SHALL BE SUBSIDIARY TO THE INSTALLATION OF NEW CURB RAMP OR CONCRETE SIDEWALK (SEE PROPOSED PEDESTRIAN RAMPS LAYOUT).
4. THE LOCATION OF THE PROPOSED SIGNAL POLES, CONDUIT, AND GROUND BOXES, ARE DIAGRAMMATIC ONLY AND MAY BE SHIFTED BY THE ENGINEER TO ACCOMMODATE FIELD CONDITIONS.
5. CONTRACTOR SHALL COORDINATE WITH ONCOR CONCERNING TRAFFIC SIGNAL ELECTRICAL SERVICE. CONTACT ONCOR REGARDING POINT OF DELIVERY AND DISTRIBUTION TO ELECTRICAL PEDESTAL SERVICE.
6. REFER TO THE QUANTITY DATA SHEET FOR ADDITIONAL INFORMATION REGARDING CONDUIT AND CONDUCTOR TYPES AND QUANTITIES.
7. RIGHT OF WAY LINE LOCATION IS APPROXIMATE.
8. EXISTING STOP SIGNS TO BE REMOVED AFTER TRAFFIC SIGNAL IS OPERATIONAL.
9. CITY OF MIDLAND TO FURNISH: OPTICOM SYSTEM, BATTERY BACKUP UNIT, ILSN SIGNS, FLASHING YELLOW ARROW SIGNS, CONTROLLER, TRAFFIC SIGNAL POLES, AND CABINET AS SHOWN IN THE PLANS.
10. CONTRACTOR TO RUN 2 ETHERNET CABLES (RADIO & CCTV) BETWEEN CABINET AND POLE P-1. CONTRACTOR SHALL COORDINATE WITH CITY OF MIDLAND TO FINALIZE LOCATIONS. CITY WILL INSTALL RADIO & CCTV AFTER SIGNAL IS COMPLETE.
11. ALL EXISTING WORKING ILLUMINATION TO BE WORKING AT THE END OF THE PROJECT.
12. TOP OF DRILLED TRAFFIC SIGNAL FOUNDATION SHAFT BASE TO BE EXPOSED MIN. 2.5' ABOVE STREET LEVEL.

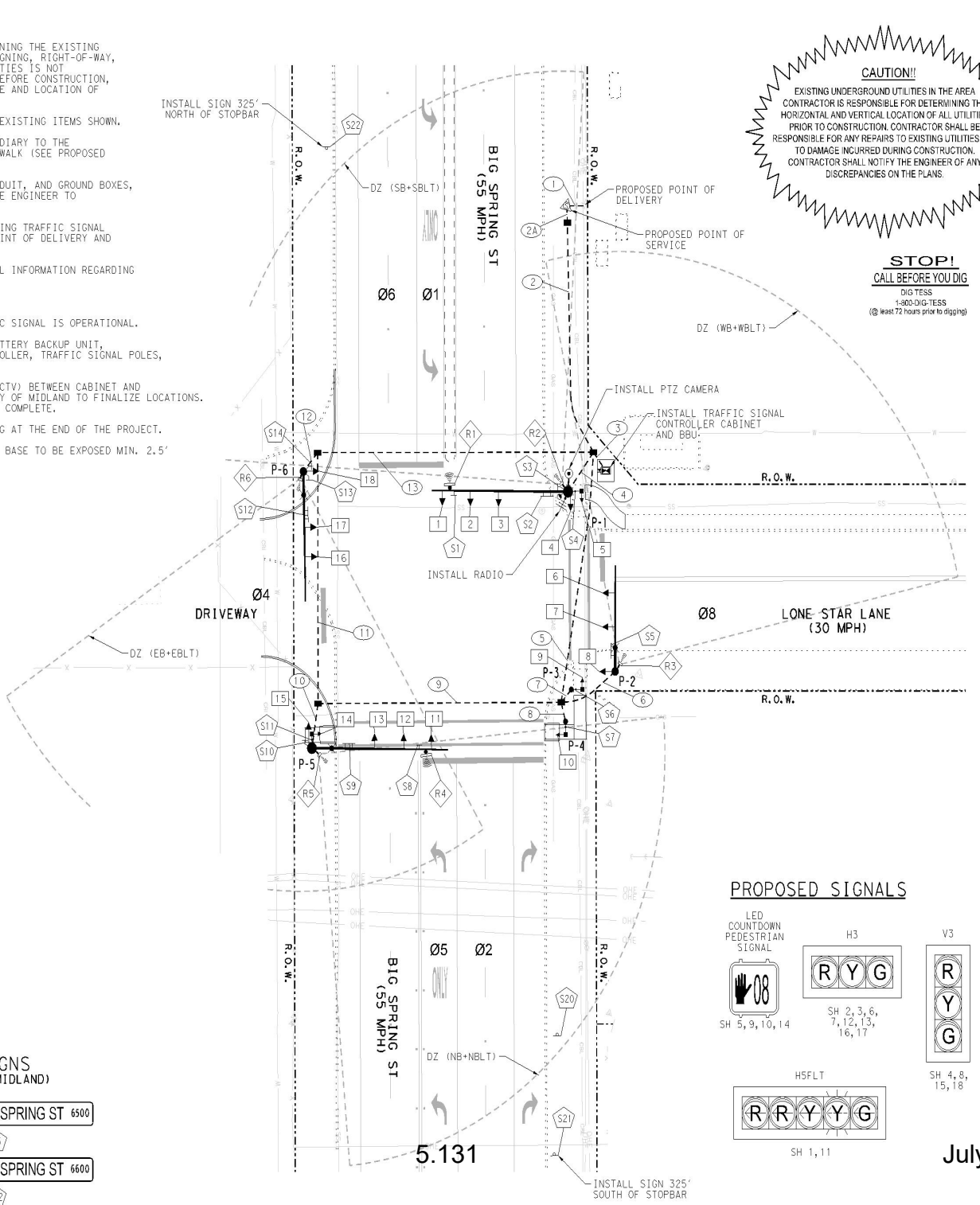

CAUTION!!
EXISTING UNDERGROUND UTILITIES IN THE AREA CONTRACTOR IS RESPONSIBLE FOR DETERMINING THE HORIZONTAL AND VERTICAL LOCATION OF ALL UTILITIES PRIOR TO CONSTRUCTION. CONTRACTOR SHALL BE RESPONSIBLE FOR ANY REPAIRS TO EXISTING UTILITIES DUE TO DAMAGE INCURRED DURING CONSTRUCTION. CONTRACTOR SHALL NOTIFY THE ENGINEER OF ANY DISCREPANCIES ON THE PLANS.

STOP!
CALL BEFORE YOU DIG
DIG TESS
1-800-DIG-TESS
(@ least 72 hours prior to digging)

0 10 20 40
ORIGINALLY PLOTTED SCALE: SCALE: 1" = 40'

LEGEND

- TYPICAL PROPOSED MAST ARM COMBINATION SIGNAL\ WITH PEDESTRIAN SIGNAL, PUSH BUTTON, LED LUMINAIRE AND SIGNAGE
- TYPICAL PROPOSED PED POLE WITH PEDESTRIAN SIGNAL, PUSH BUTTONS, AND SIGNAGE
- TRAFFIC SIGNAL CONTROLLER CABINET AND CONCRETE PAD WITH BBU SYSTEM (EXTERNAL BATTERY CABINET)
- PROPOSED TYPE C GROUND BOX W/ APRON
- PROPOSED CONDUIT
- CONDUIT RUN NUMBER
- SIGNAL HEAD NUMBER
- SIGN LABEL
- RADAR DETECTOR LABEL
- PROPOSED OPTICOM DETECTOR
- PRESENCE RADAR
- SETBACK RADAR
- PROPOSED ELECTRICAL SERVICE
- PROPOSED TRAFFIC SIGNAL POLE NUMBER
- PROPOSED PTZ CAMERA
- PROPOSED RADIO ANTENNA

PROPOSED SIGNS

R10-17T(MOD) — LEFT TURN YIELD ON FLASHING — S1, S8
R3-7R — RIGHT LANE MUST TURN RIGHT — S15
W3-3 — S16, S17
R9-3 — S3, S10, S13, S14
R10-3EL — START CROSSING Watch For Vehicles; DON'T START Finish Crossing If Started; TIME REMAINING To Finish Crossing; DON'T CROSS; TO CROSS PUSH BUTTON — S4, S7, S11
R10-3ER — START CROSSING Watch For Vehicles; DON'T START Finish Crossing If Started; TIME REMAINING To Finish Crossing; DON'T CROSS; TO CROSS PUSH BUTTON — S6

ILSN STREET NAME SIGNS
(TO BE PROVIDED BY THE CITY OF MIDLAND)

- LONE STAR LN 1000 — S2
- 6600 N BIG SPRING ST 6500 — S5
- 1000 LONE STAR LN — S9
- 6500 N BIG SPRING ST 6600 — S12

PROPOSED SIGNALS

- LED COUNTDOWN PEDESTRIAN SIGNAL — SH 5, 9, 10, 14
- H3 (R Y G) — SH 2, 3, 6, 7, 12, 13, 16, 17
- V3 (R Y G) — SH 4, 8, 15, 18
- H5FLT (R R Y Y G) — SH 1, 11

1/25/2023
STATE OF TEXAS
THOMAS W HARTMANN
109948
LICENSED PROFESSIONAL ENGINEER

Kimley»Horn
F-928
13455 Noel Road
Two Galleria Office Tower, Suite 700
Dallas, Texas 75240
tel. No. (972) 770-1300
Fax No. (972) 239-3820

MIDLAND
Feel the Energy!

PROPOSED TRAFFIC SIGNAL LAYOUT

TxDOT PROJECT NUMBER: 064465334
SCALE: AS SHOWN
DATE: 1/25/2023

DESIGN	GRAPHICS	CHECK	
TWH	LRC	TWH	7

PLOTTED: 1/25/2023
FILENAME: K:\DAL_TPP\project\064465334 - Midland 349 & Lone Star Signal Design\Cadd\Midland_SHT007_p_sgnl.dgn
40.0000 ft / in.
By: Lucy.Cunningham

CONDUIT AND CABLE CHART

WIRE SIZE AND TYPE

RUN NO	CONDUIT STATUS	TxDOT ITEM 618 CONDUIT										CABLE STATUS	TxDOT ITEM 620 ELECTRICAL CONDUCTORS								TxDOT ITEM 684 TRAFFIC SIGNAL CABLES								OPTICOM CABLE		CAT 5 ETHERNET CABLE		RADAR CABLE		TOTAL LENGTH OF RUN	RUN NO
		2" PVC SCH 80 (RISER)		2" PVC (TRENCHED)		3" PVC (TRENCHED)		4" PVC (TRENCHED)		4" PVC (BORED)			NO. 6 XHHW WIRE		NO. 6 BARE WIRE		NO. 8 XHHW WIRE		NO. 12 XHHW WIRE		TY A 2 CNDR NO. 12		TY A 5 CNDR NO. 14		TY A 7 CNDR NO. 14		TY A 20 CNDR NO. 14									
		Qty	Len	Qty	Len	Qty	Len	Qty	Len	Qty	Len		Qty	Len	Qty	Len	Qty	Len	Qty	Len	Qty	Len	Qty	Len	Qty	Len	Qty	Len	Qty	Len	Qty	Len		
1	I	1	10	1	10							I	TO BE INSTALLED BY ONCOR																				10	1
2A	I			1	10							I	2	20	1	10	2	20															10	2A
2	I			1	85							I	2	170	1	85	2	170															85	2
3	I			1	10			2	20			I	2	20	1	10					4	40					4	40	1	10	1	10	6	60	10	3
4	I					1	20					I			1	20	2	40			1	20					1	20	1	20	1	20	2	40	20	4
5	I									1	90	I			1	90	1	90			3	270					2	180					3	270	90	5
6	I					1	30					I			1	30	2	60					2	60			1	30					1	30	30	6
7	I			1	10							I			1	10					1	10	1	10									10	7
8	I			1	10							I			1	10					1	10	1	10									10	8
9	I									1	105	I			1	105	1	105			1	105					1	105					2	210	105	9
10	I					1	20					I			1	20	1	20			1	20					1	20					2	40	20	10
11	I									1	90	I			1	90																			90	11
12	I					1	10					I			1	10	1	10									1	10					1	10	10	12
13	I									1	115	I			1	115	1	115									1	115					1	115	115	13
SUBTOTAL			10		135		80		20		400			210		605		630		0		475		80		0		520		30		30		775		
P-1	P											I								20		5		120		75				25		30		95	VARIES	P-1
P-2	P											I								50				100										25	VARIES	P-2
P-3	P											I										5		10											VARIES	P-3
P-4	P											I										5		10											VARIES	P-4
P-5	P											I								50		5		120		70								95	VARIES	P-5
P-6	P											I								50				90										25	VARIES	P-6
SUBTOTAL			0		0		0		0		0			0		0		0		170		20		450		145		0		25		30		240		
TOTAL			10		135		80		20		400			210		605		630		170		495		530		145		520		55		60		1015		

CONDUIT STATUS: E=EXISTING; I=INSTALL; A=ABANDON; AC=AERIAL CABLE; R=REMOVE AND SALVAGE; P=INSTALL WIRE INSIDE STEEL POLE

P-# - REFERS TO WIRING WITHIN THE SIGNAL POLE AND MAST ARM

SIGNAL HEAD AND POLE PLACEMENT (FT)

POLE NUMBER	STATUS	A (FT)	B (FT)	C (FT)	D (FT)	F (FT)	G (FT) **	H (FT)	NO. OF HEADS (EA) *	ILSN	LUM	DRILLED SHAFT LENGTH (FT) 24" DIA SUB TO ITEM 687	DRILLED SHAFT LENGTH (FT) 36" DIA TYPE A ITEM 416	DRILLED SHAFT LENGTH (FT) 48" DIA TYPE A ITEM 416 **	FDN. TYPE WIND ZONE 80 MPH
P-1	I	6	28	12	12	55	20	24	3	Y	N	-	-	25	48-A
P-2	I	7	15	12	-	36	19	30	2	Y	Y	-	13	-	36-A
P-3	I	7	PEDESTRIAN SIGNAL POLE				10	-	-	-	-	6	-	-	24-A
P-4	I	9	PEDESTRIAN SIGNAL POLE				10	-	-	-	-	6	-	-	24-A
P-5	I	10	26	12	11	55	20	30	3	Y	Y	-	-	25	48-A
P-6	I	8	19	10	-	44	19	30	2	Y	Y	-	13	-	36-A
								TOTAL:				12	26	50	

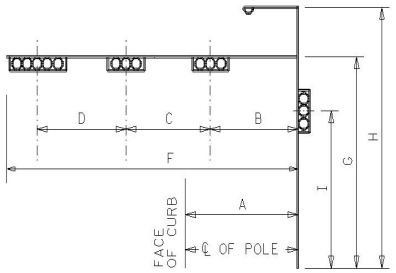

SIGNAL POLE STATUS: I=INSTALL; E=EXISTING; REM=REMOVE; F=INSTALL IN FUTURE PHASE

NOTE: TOP OF DRILLED TRAFFIC SIGNAL FOUNDATION SHAFT BASE TO BE EXPOSED MIN. 2.5' ABOVE STREET LEVEL.

* - DOES NOT INCLUDE VERTICAL SIDEMOUNT SIGNAL HEADS OR PEDESTRIAN SIGNAL HEADS

- PER CITY OF MIDLAND, EXTEND HEIGHT OF DRILLED SHAFTS FOR 20 FEET OF CLEARANCE FROM

** CROWN OF ROAD TO BOTTOM OF SIGNAL HEADS ON BIG SPRING STREET

1/25/2023

STATE OF TEXAS
THOMAS W HARTMANN
109948
LICENSED
PROFESSIONAL ENGINEER

Kimley»Horn
F-928
13455 Noel Road
Two Galleria Office Tower, Suite 700
Dallas, Texas 75240
tel. No. (972) 770-1300
Fax No. (972) 239-3820

MIDLAND
Feel the Energy!

PROPOSED QUANTITIES

SHEET 1 OF 3

TxDOT PROJECT NUMBER: 064465334

SCALE: AS SHOWN

DATE: 1/25/2023

DESIGN	GRAPHICS	CHECK
TWH	LRC	TWH

8

PLOTTED: 1/25/2023
FILENAME: K:\ODAL_TPTO\projects\064465334 - Midland 349 & Lone Star Signal Design\Cadd\Midland_SHT008_Proposed quantities (1 of 3).dgn
40.0000 ft / in.
By: Lucy.Cunningham

CABLE TERMINATION CHART

CNDR. NO.	CONDUCTOR COLOR	CABLE 1 20 CNDR. FROM P-1 TO CNTRL.	CABLE 2 20 CNDR. FROM P-2 TO CNTRL.	CABLE 3 5 CNDR. FROM P-2 TO P-3	CABLE 4 5 CNDR. FROM P-2 TO P-4	CABLE 5 20 CNDR. FROM P-5 TO CNTRL.	CABLE 6 20 CNDR. FROM P-6 TO CNTRL.
1	BLACK	SPARE	SPARE	SPARE	SPARE	SPARE	SPARE
2	WHITE	SH COM	SH COM	SH COM	SH COM	SH COM	SH COM
3	RED	SH 2,3,4 - Ø2 R	SH 6,7,8 - Ø4 R	SH 9 - Ø2 DW	SH 10 - Ø4 DW	SH 12,13,15 - Ø6 R	SH 16,17,18 - Ø8 R
4	GREEN	SH 2,3,4 - Ø2 G	SH 6,7,8 - Ø4 G	SH 9 - Ø2 W	SH 10 - Ø4 W	SH 12,13,15 - Ø6 G	SH 16,17,18 - Ø8 G
5	ORANGE	SH 2,3,4 - Ø2 Y	SH 6,7,8 - Ø4 Y	SPARE	SPARE	SH 12,13,15 - Ø6 Y	SH 16,17,18 - Ø8 Y
6	BLUE	SH 5 - Ø2 DW	SPARE			SH 14 - Ø4 DW	SPARE
7	WHITE/BLACK	SH 5 - Ø2 W	SPARE			SH 14 - Ø4 W	SPARE
8	RED/BLACK	SPARE	SPARE			SPARE	SPARE
9	GREEN/BLACK	SPARE	SPARE			SPARE	SPARE
10	ORANGE/BLACK	SPARE	SPARE			SPARE	SPARE
11	BLUE/BLACK	SPARE	SPARE			SPARE	SPARE
12	BLACK/WHITE	SPARE	SPARE			SPARE	SPARE
13	RED/WHITE	SH 1 - OLB R (LT ARW)	SPARE			SH 11 - OLA R (LT ARW)	SPARE
14	GREEN/WHITE	SH 1 - Ø5 G (LT ARW)	SPARE			SH 11 - Ø1 G (LT ARW)	SPARE
15	BLUE/WHITE	SH 1 - OLB Y (LT ARW)	SPARE			SH 11 - OLA Y (LT ARW)	SPARE
16	BLACK/RED	SPARE	SPARE			SPARE	SPARE
17	WHITE/RED	SPARE	SPARE			SPARE	SPARE
18	ORANGE/RED	SPARE	SPARE			SPARE	SPARE
19	BLUE/RED	SH 1 - OLB FY (LT ARW)	SPARE			SH 11 - OLA FY (LT ARW)	SPARE
20	RED/GREEN	SPARE	SPARE			SPARE	SPARE

NOTE: RUN (TYPE C) (2 CNDR) (NO. 12) TO ALL POLES WITH APS BUTTONS

SIGNAL HEADS (ITEM 682)

SIGNAL HEAD NUMBER	12" LED SIGNAL INDICATION										PED SIG SEC (LED) (COUNTDOWN)
	SIGNAL HEAD TYPE	STATUS	BACK PLATE		LED SIGNAL LAMPS						
			3 SEC	5 SEC	<-G-	G	<-Y-	Y	<-R-	R	
			EA	EA	EA	EA	EA	EA	EA	EA	EA
1	H5FLT	I		1	1		2		2		
2	H3	I	1			1		1		1	
3	H3	I	1			1		1		1	
4	V3	I	1			1		1		1	
5	PED	I									1
6	H3	I	1			1		1		1	
7	H3	I	1			1		1		1	
8	V3	I	1			1		1		1	
9	PED	I									1
10	PED	I									1
11	H5FLT	I		1	1		2		2		
12	H3	I	1			1		1		1	
13	H3	I	1			1		1		1	
14	PED	I									1
15	V3	I	1			1		1		1	
16	H3	I	1			1		1		1	
17	H3	I	1			1		1		1	
18	V3	I	1			1		1		1	
	TOTAL (NEW)		12	2	2	12	4	12	4	12	4

STATUS: I=INSTALL; E=EXISTING; REM=EXISTING TO BE REMOVED; REL=RELOCATE

GROUND BOX SUMMARY

DESCRIPTION	UNIT	QTY.
GROUND BOX TY C (162911) W/APRON	EA	5

ELECTRICAL SERVICE DATA

ELEC. SERVICE ID	PLAN SHEET NUMBER	ELECTRICAL SERVICE DESCRIPTION (SEE ED(5)-14)	SERVICE CONDUIT **SIZE	SERVICE CONDUCTORS NO. / SIZE	SAFETY SWITCH AMPS	MAIN CKT. BRK. POLE / AMPS	TWO-POLE CONTACTOR AMPS	PANELBD / LOADCENTER AMP RATING (MIN)	BRANCH CKT. BRK. POLE / AMPS	BRANCH CIRCUIT AMPS	KVA LOAD
ES-01	----	TY D 120/240 070 (NS)SS(E)SP(U)	2"	2 / #4 INSULATED 1/#6 BARE	N/A	2P / 70	30	100	TRAFFIC SIGNAL	1P/50	<13.2
									ILSN	1P/20	
									LIGHTING	2P/20	

** - VERIFY SERVICE CONDUIT SIZE WITH UTILITY. SIZE MAY CHANGE DUE TO THE UTILITY METER REQUIREMENTS. ENSURE CONDUIT SIZE MEETS THE NATIONAL ELECTRICAL CODE.

1/25/2023

STATE OF TEXAS
THOMAS W HARTMANN
109948
LICENSED
PROFESSIONAL ENGINEER

Kimley»Horn
F-928
13455 Noel Road
Two Galleria Office Tower, Suite 700
Dallas, Texas 75240
tel. No. (972) 770-1300
Fax No. (972) 239-3820

MIDLAND
Feel the Energy!

PROPOSED QUANTITIES

SHEET 2 OF 3
TxDOT PROJECT NUMBER: 064465334
SCALE: AS SHOWN
DATE: 1/25/2023

DESIGN	GRAPHICS	CHECK
TWH	LRC	TWH

9

PLOTTED: 1/25/2023
FILENAME: K:\DAL_TPTO\projects\064465334 - Midland 349 & Loop 250\Midland_SH1009_Proposed quantities (2 of 3).dgn
40.0000 ft / in.
By: Lucy.Cunningham

APS MESSAGE CHART			
POLE LOCATION	PEDESTRIAN MOVEMENT	FUNCTIONS	SPEECH MESSAGE/SOUND DETAILS
P-1	Phase 2	PUSH BUTTON ON DW	WAIT TO CROSS LONE STAR LANE AT BIG SPRING STREET
		EXTENDED BUTTON PUSH	WAIT TO CROSS LONE STAR LANE AT BIG SPRING STREET
		LOCATOR TONE	SLOW TICK
		WALK INDICATION	LONE STAR LANE, WALK SIGN IS ON TO CROSS LONE STAR LANE
P-3	Phase 2	PUSH BUTTON ON DW	WAIT TO CROSS LONE STAR LANE AT BIG SPRING STREET
		EXTENDED BUTTON PUSH	WAIT TO CROSS LONE STAR LANE AT BIG SPRING STREET
		LOCATOR TONE	SLOW TICK
		WALK INDICATION	LONE STAR LANE, WALK SIGN IS ON TO CROSS LONE STAR LANE
P-4	Phase 4	PUSH BUTTON ON DW	WAIT TO CROSS BIG SPRING STREET AT LONE STAR LANE
		EXTENDED BUTTON PUSH	WAIT TO CROSS BIG SPRING STREET AT LONE STAR LANE
		LOCATOR TONE	SLOW TICK
		WALK INDICATION	BIG SPRING STREET, WALK SIGN IS ON TO CROSS BIG SPRING STREET
P-5	Phase 4	PUSH BUTTON ON DW	WAIT TO CROSS BIG SPRING STREET AT LONE STAR LANE
		EXTENDED BUTTON PUSH	WAIT TO CROSS BIG SPRING STREET AT LONE STAR LANE
		LOCATOR TONE	SLOW TICK
		WALK INDICATION	BIG SPRING STREET, WALK SIGN IS ON TO CROSS BIG SPRING STREET

SIGNS SUMMARY					
SIGN	SIGN TYPE	SIGN LEGEND	STATUS	SUPPORT	SIGN DIMENSION (in x in)
S1	R10-17T(MOD)	LEFT TURN YIELD ON FLASHING	I	P-1	30"x36"
S2	ILSN	LONE STAR LN	I	P-1	18"xVA
S3	R9-3	NO PEDESTRIANS	I	P-1	18"x18"
S4	R10-3EL	PED PUSH BUTTON	I	P-1	9"x15"
S5	ILSN	BIG SPRING ST	I	P-2	18"xVA
S6	R10-3ER	PED PUSH BUTTON	I	P-3	9"x15"
S7	R10-3EL	PED PUSH BUTTON	I	P-4	9"x15"
S8	R10-17T(MOD)	LEFT TURN YIELD ON FLASHING	I	P-5	30"x36"
S9	ILSN	LONE STAR LN	I	P-5	18"xVA
S10	R9-3	NO PEDESTRIANS	I	P-5	18"x18"
S11	R10-3EL	PED PUSH BUTTON	I	P-5	9"x15"
S12	ILSN	BIG SPRING ST	I	P-6	18"xVA
S13	R9-3	NO PEDESTRIANS	I	P-6	18"x18"
S14	R9-3	NO PEDESTRIANS	I	P-6	18"x18"
S15	R3-7R	RIGHT LANE MUST TURN RIGHT	I	GROUND MOUNTED	36"x36"
S16	W3-3	SIGNAL AHEAD	I	GROUND MOUNTED	30"x30"
S17	W3-3	SIGNAL AHEAD	I	GROUND MOUNTED	30"x30"

STATUS: I=INSTALL; E=EXISTING TO REMAIN; REM=EXISTING TO BE REMOVED; REL=EXISTING TO BE RELOCATED

PHASE SEQUENCE

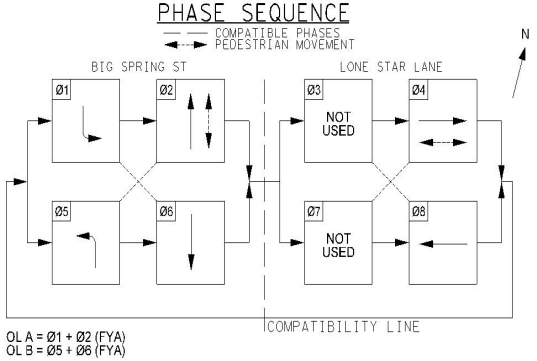

OL A = Ø1 + Ø2 (FYA)
OL B = Ø5 + Ø6 (FYA)

1/25/2023

STATE OF TEXAS
THOMAS W HARTMANN
109948
LICENSED
PROFESSIONAL ENGINEER

Kimley»Horn
F-928
13455 Noel Road
Two Galleria Office Tower, Suite 700
Dallas, Texas 75240
tel. No. (972) 770-1300
Fax No. (972) 239-3820

MIDLAND
Feel the Energy!

PROPOSED QUANTITIES

SHEET 3 OF 3
TxDOT PROJECT NUMBER: 064465334
SCALE: AS SHOWN
DATE: 1/25/2023

DESIGN	GRAPHICS	CHECK
TWH	LRC	TWH

10

PLOTTED: 1/25/2023
FILENAME: K:\DAL_TPP\projects\064465334 - Midland 349 & Lone Star Signal Design\Cadd\Midland_SHT010_Proposed quantities (3 of 3).dgn
40.0000 ft / in.
By: Lucy.Cunningham

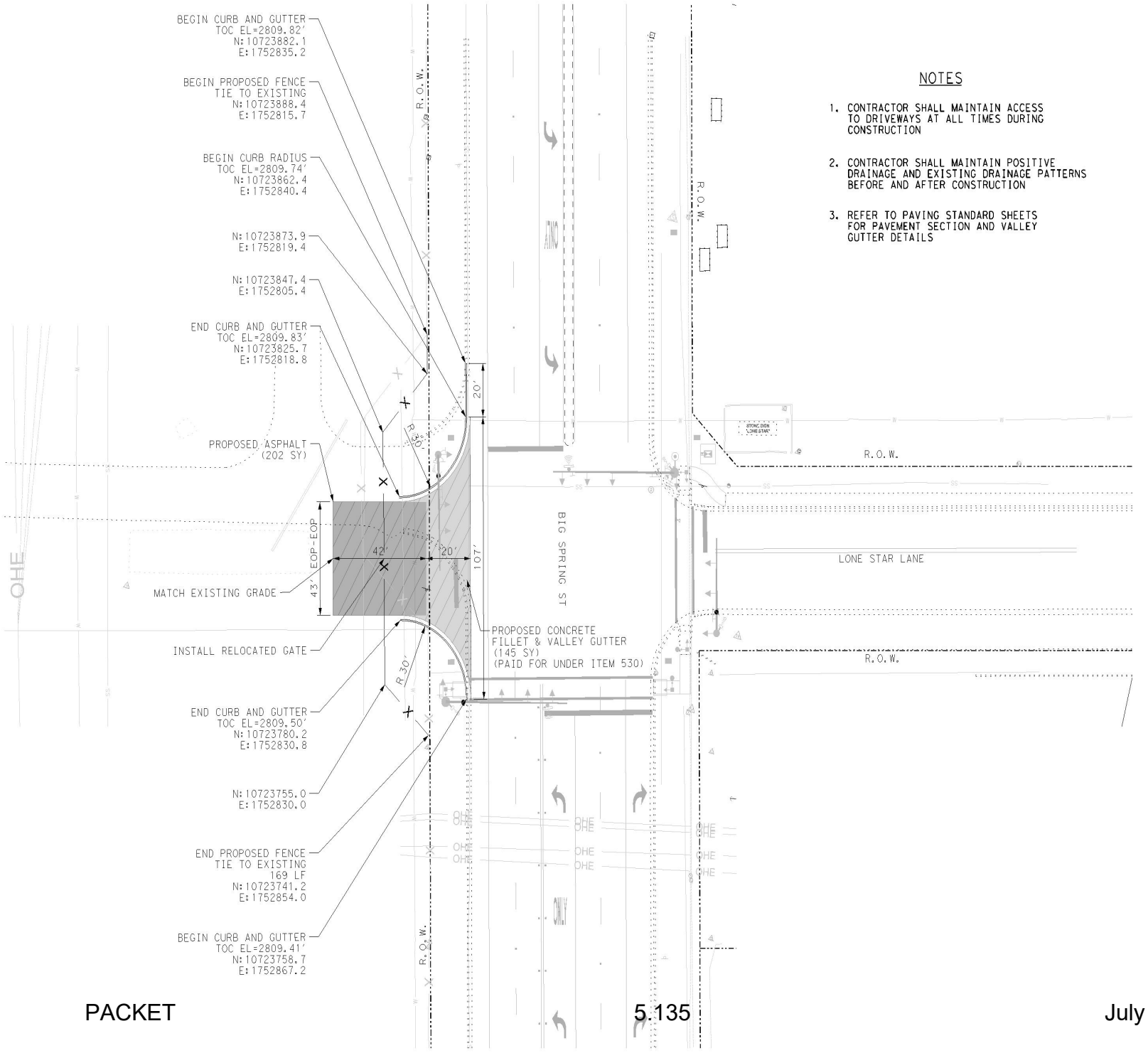

NOTES

1. CONTRACTOR SHALL MAINTAIN ACCESS TO DRIVEWAYS AT ALL TIMES DURING CONSTRUCTION
2. CONTRACTOR SHALL MAINTAIN POSITIVE DRAINAGE AND EXISTING DRAINAGE PATTERNS BEFORE AND AFTER CONSTRUCTION
3. REFER TO PAVING STANDARD SHEETS FOR PAVEMENT SECTION AND VALLEY GUTTER DETAILS

LEGEND

- PROPOSED DRIVEWAY
- PROPOSED FENCE
- RIGHT OF WAY

1/25/2023

STATE OF TEXAS
JESUS J. SAENZ
135270
LICENSED
PROFESSIONAL ENGINEER

Kimley»Horn
F-928
13455 Noel Road
Two Galleria Office Tower, Suite 700
Dallas, Texas 75240
tel. No. (972) 770-1300
Fax No. (972) 239-3820

MIDLAND
Feel the Energy!

PROPOSED DRIVEWAY

TxDOT PROJECT NUMBER: 064465334
SCALE: AS SHOWN
DATE: 1/25/2023

DESIGN	GRAPHICS	CHECK
EIA	EIA	JJS

11

PLOTTED: 1/25/2023
FILENAME: K:\DAL_TPTO\project\064465334 - Midland 349 & Lone Star Signal Design\Cadd\Midland_SHT011_Proposed Driveway.dgn
40.0000 ft / in.
By: Lucy.Cunningham

DISCLAIMER:
The use of this standard is governed by the "Texas Engineering Practice Act". No warranty of any kind is made by TxDOT for any purpose whatsoever. TxDOT assumes no responsibility for the conversion of this standard to other formats or for incorrect results or damages resulting from its use.

DATE:
FILE:

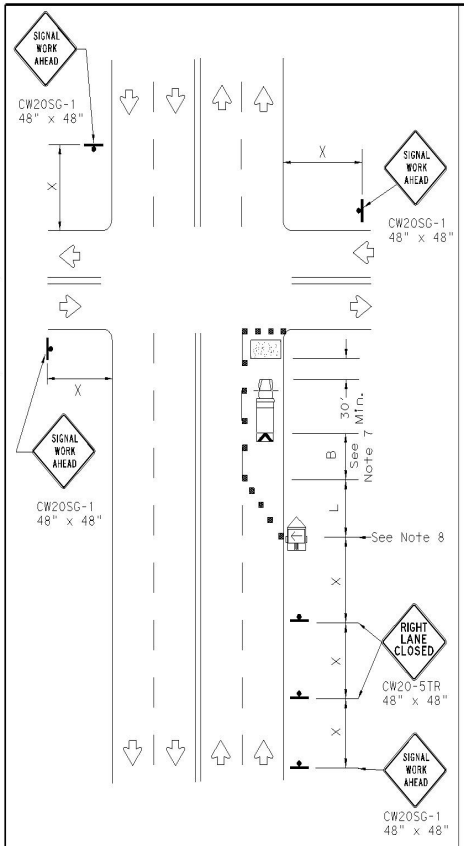

NEAR SIDE LANE CLOSURE

SHORT DURATION OR SHORT TERM STATIONARY

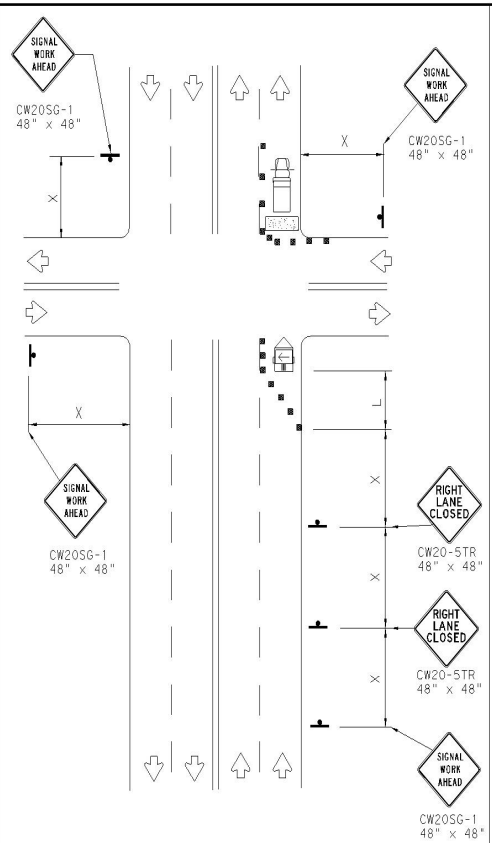

FAR SIDE RIGHT LANE CLOSURE

SHORT DURATION OR SHORT TERM STATIONARY

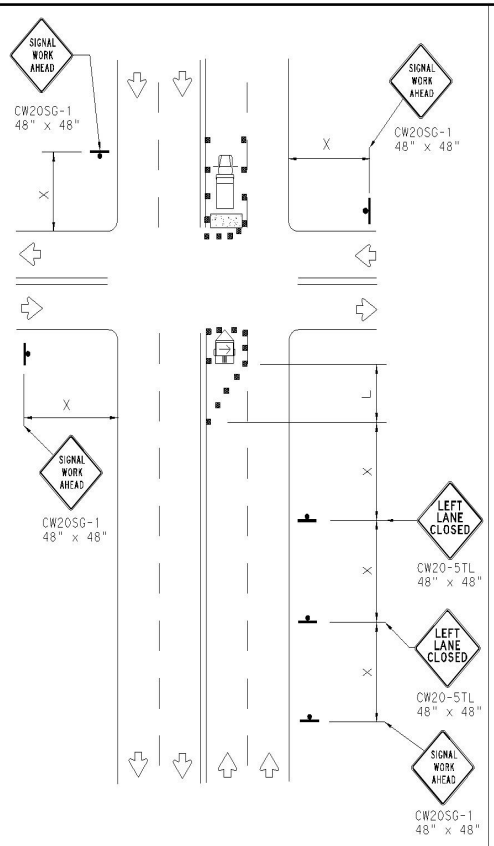

FAR SIDE LEFT LANE CLOSURE

SHORT DURATION OR SHORT TERM STATIONARY

LEGEND			
	Type 3 Barricade		Channelizing Devices
	Heavy Work Vehicle		Truck Mounted Attenuator (TMA)
	Trailer Mounted Flashing Arrow Board	M	Portable Changeable Message Sign (PCMS)
	Sign		Traffic Flow
	Flag		Flagger

Posted Speed *	Formula	Minimum Desirable Taper Lengths ** 10' Offset	11' Offset	12' Offset	Suggested Maximum Spacing of Channelizing Devices On a Taper	On a Tangent	Minimum Sign Spacing "X" Distance	Suggested Longitudinal Buffer Space "B"
30	$L=\frac{WS^2}{60}$	150'	165'	180'	30'	60'	120'	90'
35		205'	225'	245'	35'	70'	160'	120'
40		265'	295'	320'	40'	80'	240'	155'
45	L=WS	450'	495'	540'	45'	90'	320'	195'
50		500'	550'	600'	50'	100'	400'	240'
55		550'	605'	660'	55'	110'	500'	295'
60		600'	660'	720'	60'	120'	600'	350'
65		650'	715'	780'	65'	130'	700'	410'
70		700'	770'	840'	70'	140'	800'	475'
75		750'	825'	900'	75'	150'	900'	540'

* Conventional Roads Only

** Taper lengths have been rounded off.
L=Length of Taper(FT) W=Width of Offset(FT) S=Posted Speed(MPH)

WORKERS IN BUCKET TRUCKS SHALL NOT WORK ABOVE OPEN LANES OF TRAFFIC.

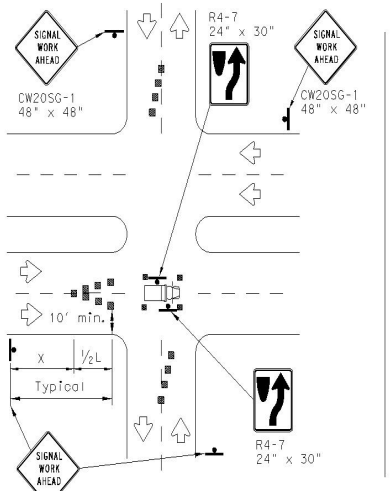

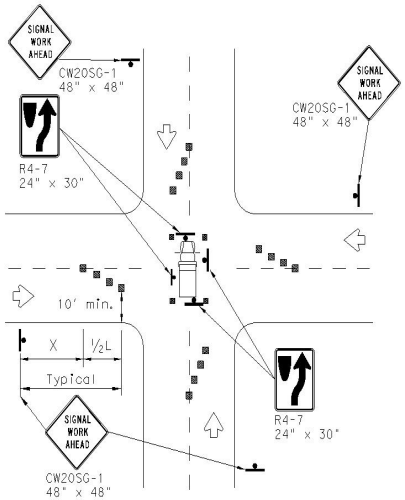

OPERATIONS IN THE INTERSECTION

SHORT DURATION

GENERAL NOTES

1. The minimum size channelizing device is the 28" cone. 42" Two-piece cones, drums, vertical panels or barricades will be required when the device must be left unattended at night.
2. Obstructions or hazards at the work area shall be clearly marked and delineated at all times.
3. Flaggers and Flagger Symbol (CW20-7) signs may be required according to field conditions.
4. Vehicles parked in roadway shall be equipped with at least two high intensity rotating, flashing, oscillating or strobe type lights.
5. High level warning devices (flag trees) may be used at corners of the vehicle.
6. When work operations are performed on existing signals, the signals may be placed in flashing red mode when approved by the engineer. If existing signals do not have power, All-Way Stop (R1-1 and R1-3P) signs may be implemented when approved by the engineer.
7. For Short-Term Stationary work the buffer space "B" from the above table should be used if field conditions permit. For Short Duration (less than 1 hour) any buffer space provided will enhance the safety of the setup.
8. The arrow board at this location may be omitted for Short Duration work if the work vehicle has an arrow board in operation. As an option, the arrow board may be placed at the end of the taper in the closed lane if space is not available at the beginning of the taper.
9. Signs and devices for the NEAR SIDE LANE CLOSURE may be altered for a left lane closure by using a LEFT LANE CLOSED (CW20-5TL) and adding channelizing devices on the centerline to protect the work space from opposing traffic.

SHEET 1 OF 2

Texas Department of Transportation

Traffic Operations Division Standard

TRAFFIC SIGNAL WORK TYPICAL DETAILS

WZ(BTS-1)-13

FILE: wzbts-13.dgn	DN: TxDOT	CK: TxDOT	DW: TxDOT	CK: TxDOT
©TxDOT April 1992	CONT	SECT	JOB	HIGHWAY
REVISIONS	.	.	.	.
2-98 10-99 7-13	DIST	COUNTY		SHEET NO.
4-98 3-03	.	.	.	12

114

DISCLAIMER:
The use of this standard is governed by the "Texas Engineering Practice Act". No warranty of any kind is made by TxDOT for any purpose whatsoever. TxDOT assumes no responsibility for the conversion of this standard to other formats or for incorrect results or damages resulting from its use.

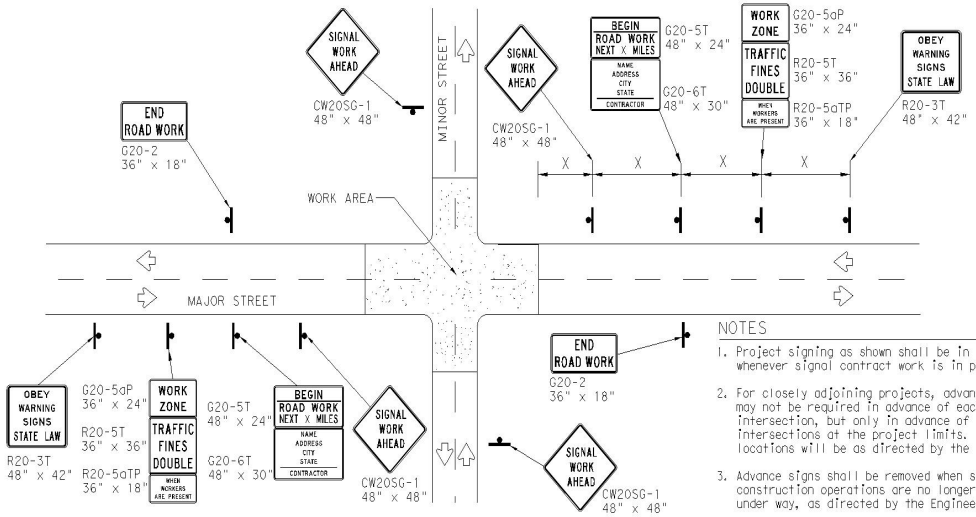

TYPICAL ADVANCE SIGNAL PROJECT SIGNING

FOR LONG TERM and INTERMEDIATE-TERM STATIONARY WORK OPERATIONS

NOTES

1. Project signing as shown shall be in place whenever signal contract work is in progress.
2. For closely adjoining projects, advance signing may not be required in advance of each intersection, but only in advance of the intersections at the project limits. Actual locations will be as directed by the Engineer.
3. Advance signs shall be removed when signal construction operations are no longer under way, as directed by the Engineer.
4. Warning sign spacing shown is typical for both directions.
5. See the Table on sheet 1 of 2 for Typical warning sign spacing.

GENERAL NOTES FOR WORK ZONE SIGNS

1. Signs shall be installed and maintained in a straight and plumb condition.
2. Wooden sign posts shall be painted white.
3. Barricades shall NOT be used as sign supports.
4. Nails shall NOT be used to attach signs to any support.
5. All signs shall be installed in accordance with the plans or as directed by the Engineer.
6. The Contractor shall furnish the sign design shown in the plans or in the "Standard Highway Sign Designs for Texas" (SHSD).
7. The Contractor shall furnish sign supports and substrates listed in the "Compliant Work Zone Traffic Control Device List" (CWZTCD), installed as per the manufacturer's recommendations.
8. Temporary signs that have damaged or cracked substrates and/or damaged or marred reflective sheeting shall be replaced as directed by the Engineer.
9. Identification markings may be shown only on the back of the sign substrate. The maximum height of letters and/or company logos used for identification shall be 1".
10. Damaged wood posts shall be replaced. Splicing wood posts will not be allowed.

DURATION OF WORK

1. Work zone durations are defined in Part 6, Section 6C.02 of the Texas Manual on Uniform Traffic Control Devices (TMUTCD).

SIGN MOUNTING HEIGHT

1. Sign height of Long-term/Intermediate-term warning signs shall be as shown on Figure 6F-1 of the TMUTCD.
2. Sign height of Short-term/Short Duration warning signs shall be as shown on Figure 6F-2 of the TMUTCD.
3. Regulatory signs shall be mounted at least 7 feet, but not more than 9 feet, above the paved surface regardless of work duration.

REMOVING OR COVERING

1. When sign messages may be confusing or do not apply, the signs shall be removed or completely covered, unless otherwise approved by the Engineer.
2. When signs are covered, the material used shall be opaque, such as heavy mil black plastic, or other materials which will cover the entire sign face and maintain their opaque properties under automobile headlights at night without damaging the sign sheeting. Burlap, or heavy materials such as plywood or alluminum shall not be used to cover signs.
3. Duct tape or other adhesive material shall NOT be affixed to a sign face.
4. Signs and anchor stubs shall be removed and holes backfilled upon completion of the work.

REFLECTIVE SHEETING

1. All signs shall be retroreflective and constructed of sheeting meeting the requirements of the DMS and color usage table shown on this sheet.

SIGN SUPPORT WEIGHTS

1. Weights used to keep signs from turning over should be sandbags filled with dry, cohesionless material.
2. The sandbags will be tied shut to keep the sand from spilling and to maintain a constant weight.
3. Rock, concrete, iron, steel or other solid objects will not be permitted for use as sign support weights.
4. Sandbags should weigh a minimum of 35 lbs and a maximum of 50 lbs.
5. Sandbags shall be made of a durable material that tears upon vehicular impact. Rubber, such as tire inner tubes, shall not be used.
6. Rubber ballasts designed for channelizing devices should not be used for ballast on portable sign supports. Sign supports designed and manufactured with rubber bases may be used when shown on the CWZTCD list.
7. Sandbags shall only be placed along or laid over the base supports of the traffic control device and shall not be suspended above ground level or hung with rope, wire, chains or other fastners. Sandbags shall be placed along the length of the skids to weigh down the sign support.
8. Sandbags shall NOT be placed under the skid and shall not be used to level sign supports placed on slopes.

LEGEND	
	Sign
	Channelizing Devices
	Type 3 Barricade

DEPARTMENTAL MATERIAL SPECIFICATIONS	
SIGN FACE MATERIALS	DMS-8300
FLEXIBLE ROLL-UP REFLECTIVE SIGNS	DMS-8310

COLOR	USAGE	SHEETING MATERIAL
ORANGE	BACKGROUND	TYPE B_{FL} OR TYPE C_{FL} SHEETING
WHITE	BACKGROUND	TYPE A SHEETING
BLACK	LEGEND & BORDERS	ACRYLIC NON-REFLECTIVE SHEETING

Only pre-qualified products shall be used. Appendix One "Compliant Work Zone Traffic Control Devices List" (CWZTCD) describes pre-qualified products and their sources and may be found at the following web address:
http://www.txdot.gov/txdot_library/publications/construction.htm

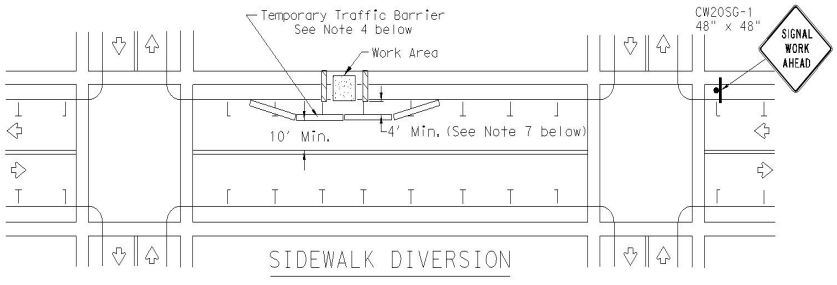

SIDEWALK DIVERSION

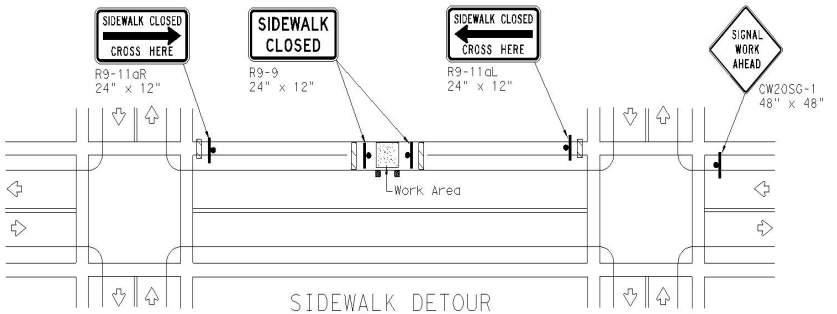

SIDEWALK DETOUR

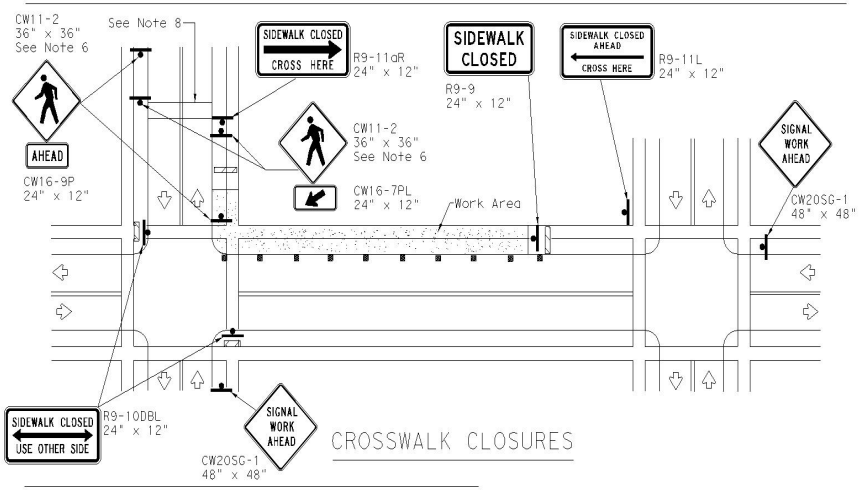

CROSSWALK CLOSURES

PEDESTRIAN CONTROL

1. Holes, trenches or other hazards shall be adequately protected by covering, delineating or surrounding the hazard with orange plastic pedestrian fencing or longitudinal channelizing devices, or as directed by the Engineer.
2. "CROSSWALK CLOSURES" as detailed above will require the Engineer's approval prior to installation.
3. R9 series signs shown may be placed on supports detailed on the BC standards or CWZTCD list, or when fabricated from approved lightweight plastic substrates, they may be mounted on top of a plastic drum at or near the location shown.
4. For speeds less than 45 mph longitudinal channelizing devices may be used instead of traffic barriers when approved by the Engineer. Attenuation of blunt ends and installation of water filled devices shall be as per BC(9) and manufacturer's recommendations.
5. Location of devices are for general guidance. Actual device spacing and location must be field adjusted to meet actual conditions.
6. Where pedestrians with visual disabilities normally use the closed sidewalk Detectable Pedestrian Barricades should be used instead of the Type 3 Barricades shown.
7. The width of existing sidewalk should be maintained if practical.
8. Pavement markings for mid-block crosswalks shall be paid for under the appropriate bid items.
9. When crosswalks or other pedestrian facilities are closed or relocated, temporary facilities shall be detectable and shall include accessibility features consistent with the features present in the existing pedestrian facility.

SHEET 2 OF 2

Texas Department of Transportation | Traffic Operations Division Standard

TRAFFIC SIGNAL WORK BARRICADES AND SIGNS

WZ(BTS-2)-13

FILE: wzbts13-20.dgn	DN: TxDOT	CK: TxDOT	DW: TxDOT	CK: TxDOT
©TxDOT April 1992	CONT	SECT	JOB	HIGHWAY
REVISIONS	.	.	.	.
2-98 10-99 7-13	DIST	COUNTY		SHEET NO.
4-98 3-03	.	.		13
115				

DATE:
FILE:

PACKET 5.137 July 11, 2023

DISCLAIMER:
The use of this standard is governed by the "Texas Engineering Practice Act". No warranty of any kind is made by the Texas Department of Transportation for any purpose whatsoever. TxDOT disclaims responsibility for the conversion of this standard to other formats or for incorrect results or damages resulting from its use.

BARRICADE AND CONSTRUCTION (BC) STANDARD SHEETS GENERAL NOTES:

1. The Barricade and Construction Standard Sheets (BC sheets) are intended to show typical examples for placement of temporary traffic control devices, construction pavement markings, and typical work zone signs. The information contained in these sheets meet or exceed the requirements shown in the "Texas Manual on Uniform Traffic Control Devices" (TMUTCD).

2. The development and design of the Traffic Control Plan (TCP) is the responsibility of the Engineer.

3. The Contractor may propose changes to the TCP that are signed and sealed by a licensed professional engineer for approval. The Engineer may develop, sign and seal Contractor proposed changes.

4. The Contractor is responsible for installing and maintaining the traffic control devices as shown in the plans. The Contractor may not move or change the approximate location of any device without the approval of the Engineer.

5. Geometric design of lane shifts and detours should, when possible, meet the applicable design criteria contained in manuals such as the American Association of State Highway and Transportation Officials (AASHTO), "A Policy on Geometric Design of Highways and Streets," the TxDOT "Roadway Design Manual" or engineering judgment.

6. When projects abut, the Engineer(s) may omit the END ROAD WORK, TRAFFIC FINES DOUBLE, and other advance warning signs if the signing would be redundant and the work areas appear continuous to the motorists. If the adjacent project is completed first, the Contractor shall erect the necessary warning signs as shown on these sheets, the TCP sheets or as directed by the Engineer. The BEGIN ROAD WORK NEXT X MILES sign shall be revised to show appropriate work zone distance.

7. The Engineer may require duplicate warning signs on the median side of divided highways where median width will permit and traffic volumes justify the signing.

8. All signs shall be constructed in accordance with the details found in the "Standard Highway Sign Designs for Texas," latest edition. Sign details not shown in this manual shall be shown in the plans or the Engineer shall provide a detail to the Contractor before the sign is manufactured.

9. The temporary traffic control devices shown in the illustrations of the BC sheets are examples. As necessary, the Engineer will determine the most appropriate traffic control devices to be used.

10. As shown on BC(2), the OBEY WARNING SIGNS STATE LAW sign, STAY ALERT TALK OR TEXT LATER (see Sign Detail G20-10T) and the WORK ZONE TRAFFIC FINES DOUBLE sign with plaque shall be erected in advance of the CSJ limits. However, the TRAFFIC FINES DOUBLE sign will not be required on projects consisting solely of mobile operation work, such as striping or milling edgeline rumble strips. The BEGIN ROAD WORK NEXT X MILES, CONTRACTOR and END ROAD WORK signs shall be erected at or near the CSJ limits.

11. Except for devices required by Note 10, traffic control devices should be in place only while work is actually in progress or a definite need exists.

12. The Engineer has the final decision on the location of all traffic control devices.

13. Inactive equipment and work vehicles, including workers' private vehicles must be parked away from travel lanes. They should be as close to the right-of-way line as possible, or located behind a barrier or guardrail, or as approved by the Engineer.

WORKER SAFETY APPAREL NOTES:

1. Workers on foot who are exposed to traffic or to construction equipment within the right-of-way shall wear high-visibility safety apparel meeting the requirements of ISEA "American National Standard for High-Visibility Apparel", latest or equivalent revisions, and labeled as ANSI 107-2004 standard performance for Class 2 or 3 risk exposure. Class 3 garments should be considered for high traffic volume work areas or night time work.

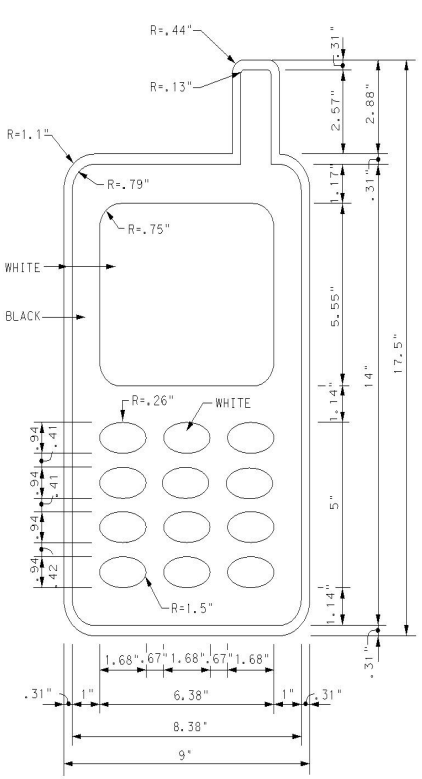

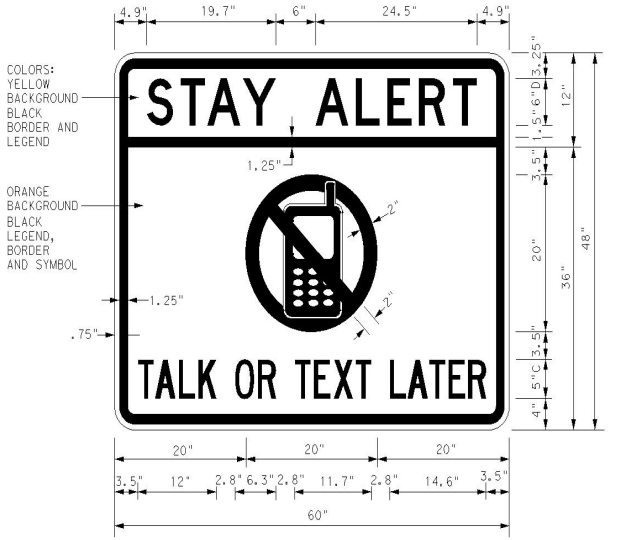

3.0" Radius, 1.25" Border, 0.75" Indent, Black on Yellow;
(STAY ALERT) Font: D
3.0" Radius, 1.25" Border, 0.75" Indent, Black on Orange;
(TALK OR TEXT LATER) Font: C specified length;

SIGN DETAIL (G20-10T)

Only pre-qualified products shall be used. The "Compliant Work Zone Traffic Control Devices List" (CWZTCD) describes pre-qualified products and their sources and may be found on-line at the web address given below or by contacting:

Texas Department of Transportation
Traffic Operations Division - TE
Phone (512) 416-3118

THE DOCUMENTS BELOW CAN BE FOUND ON-LINE AT http://www.txdot.gov
COMPLIANT WORK ZONE TRAFFIC CONTROL DEVICES LIST (CWZTCD)
DEPARTMENTAL MATERIAL SPECIFICATIONS (DMS)
MATERIAL PRODUCER LIST (MPL)
ROADWAY DESIGN MANUAL - SEE "MANUALS (ONLINE MANUALS)"
STANDARD HIGHWAY SIGN DESIGNS FOR TEXAS (SHSD)
TEXAS MANUAL ON UNIFORM TRAFFIC CONTROL DEVICES (TMUTCD)
TRAFFIC ENGINEERING STANDARD SHEETS

Texas Department of Transportation — Traffic Operations Division Standard

BARRICADE AND CONSTRUCTION GENERAL NOTES AND REQUIREMENTS

BC(1)-14

FILE: bc-14.dgn	DN: TxDOT	CK: TxDOT	DW: TxDOT	CK: TxDOT
©TxDOT November 2002	CONT	SECT	JOB	HIGHWAY
REVISIONS 4-03 5-10 8-14 9-07 7-13	DIST	COUNTY		SHEET NO. 14

95

DATE:
FILE:

DISCLAIMER:
The use of this standard is governed by the "Texas Engineering Practice Act". No warranty of any kind is made by TxDOT for any purpose whatsoever. TxDOT assumes no responsibility for the conversion of this standard to other formats or for incorrect results or damages resulting from its use.

TYPICAL LOCATION OF CROSSROAD SIGNS

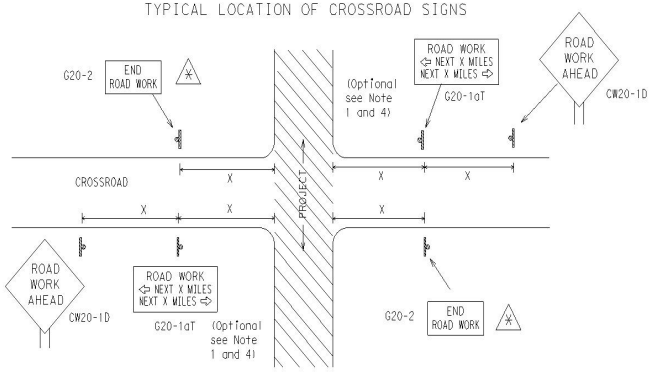

* May be mounted on back of "ROAD WORK AHEAD"(CW20-1D) sign with approval of Engineer. (See note 2 below)

1. The typical minimum signing on a crossroad approach should be a "ROAD WORK AHEAD" (CW20-1D)sign and a (G20-2) "END ROAD WORK" sign, unless noted otherwise in plans.
2. The Engineer may use the reduced size 36" x 36" ROAD WORK AHEAD (CW20-1D) sign mounted back to back with the reduced size 36" x 18" "END ROAD WORK"(G20-2) sign on low volume crossroads (see Note 4 under "Typical Construction Warning Sign Size and Spacing"). See the "Standard Highway Sign Designs for Texas" manual for sign details. The Engineer may omit the advance warning signs on low volume crossroads. The Engineer will determine whether a road is low volume. This information shall be shown in the plans.
3. Based on existing field conditions, the Engineer/Inspector may require additional signs such as FLAGGER AHEAD, LOOSE GRAVEL, or other appropriate signs. When additional signs are required, these signs will be considered part of the minimum requirements. The Engineer/Inspector will determine the proper location and spacing of any sign not shown on the BC sheets, Traffic Control Plan sheets or the Work Zone Standard Sheets.
4. The "ROAD WORK NEXT X MILES"(G20-1aT)sign shall be required at high volume crossroads to advise motorists of the length of construction in either direction from the intersection. The Engineer will determine whether a roadway is considered high volume.
5. Additional traffic control devices may be shown elsewhere in the plans for higher volume crossroads.
6. When work occurs in the intersection area, appropriate traffic control devices, as shown elsewhere in the plans or as determined by the Engineer/Inspector, shall be in place.

T-INTERSECTION

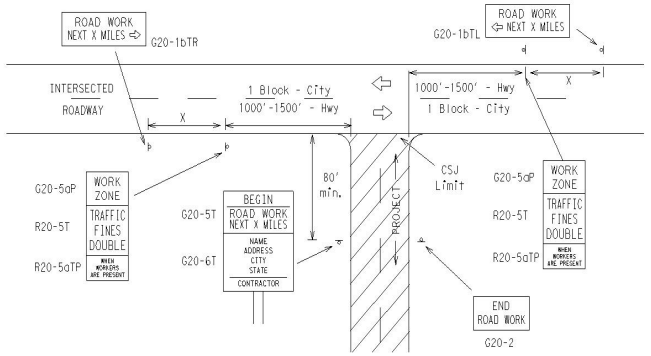

CSJ LIMITS AT T-INTERSECTION

1. The Engineer will determine the types and location of any additional traffic control devices, such as a flagger and accompanying signs, or other signs, that should be used when work is being performed at or near an intersection.
2. If construction closes the road at a T-intersection the Contractor shall place the "CONTRACTOR NAME"(G20-6T) sign behind the Type 3 Barricades for the road closure (see BC(10) also). The "ROAD WORK NEXT X MILES" left arrow(G20-1bTL) and "ROAD WORK NEXT X MILES" right arrow (G20-1bTR)" signs shall be replaced by the detour signing called for in the plans.

TYPICAL CONSTRUCTION WARNING SIGN SIZE AND SPACING[1,5,6]

SIZE

Sign Number or Series	Conventional Road	Expressway/ Freeway
CW20[4] CW21 CW22 CW23 CW25	48" x 48"	48" x 48"
CW1, CW2, CW7, CW8, CW9, CW11, CW14	36" x 36"	48" x 48"
CW3, CW4, CW5, CW6, CW8-3, CW10, CW12	48" x 48"	48" x 48"

SPACING

Posted Speed	Sign Spacing "X" △
MPH	Feet (Apprx.)
30	120
35	160
40	240
45	320
50	400
55	500[2]
60	600[2]
65	700[2]
70	800[2]
75	900[2]
80	1000[2]
*	*[3]

* For typical sign spacings on divided highways, expressways and freeways, see Part 6 of the "Texas Manual on Uniform Traffic Control Devices" (TMUTCD) typical application diagrams or TCP Standard Sheets.

△ Minimum distance from work area to first Advance Warning sign nearest the work area and/or distance between each additional sign.

GENERAL NOTES

1. Special or larger size signs may be used as necessary.
2. Distance between signs should be increased as required to have 1500 feet advance warning.
3. Distance between signs should be increased as required to have 1/2 mile or more advance warning.
4. 36" x 36" "ROAD WORK AHEAD" (CW20-1D)signs may be used on low volume crossroads at the discretion of the Engineer. See Note 2 under "Typical Location of Crossroad Signs".
5. Only diamond shaped warning sign sizes are indicated.
6. See sign size listing in "TMUTCD", Sign Appendix or the "Standard Highway Sign Designs for Texas" manual for complete list of available sign design sizes.

WORK AREAS IN MULTIPLE LOCATIONS WITHIN CSJ LIMITS

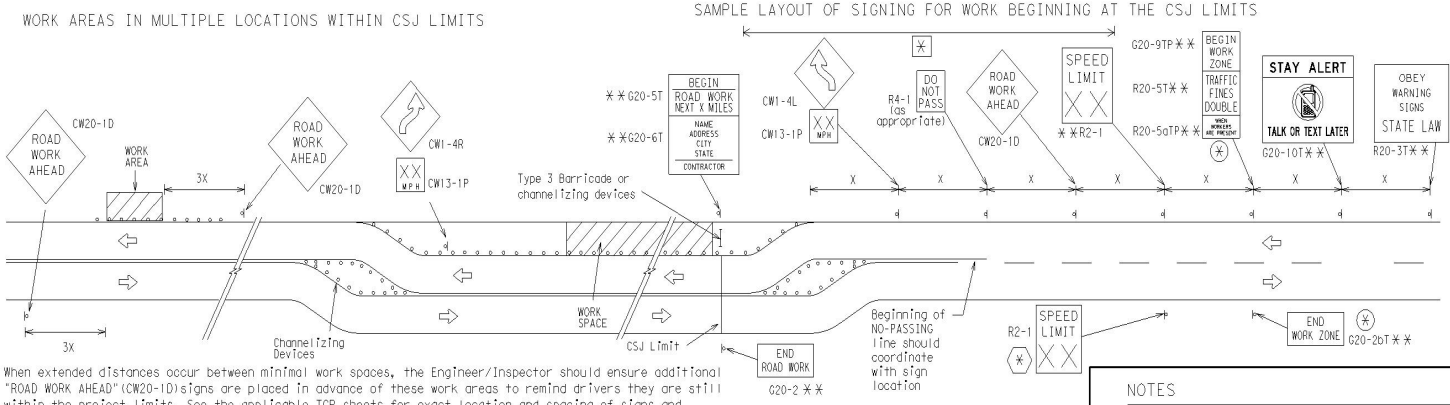

When extended distances occur between minimal work spaces, the Engineer/Inspector should ensure additional "ROAD WORK AHEAD"(CW20-1D)signs are placed in advance of these work areas to remind drivers they are still within the project limits. See the applicable TCP sheets for exact location and spacing of signs and channelizing devices.

SAMPLE LAYOUT OF SIGNING FOR WORK BEGINNING AT THE CSJ LIMITS

SAMPLE LAYOUT OF SIGNING FOR WORK BEGINNING DOWNSTREAM OF THE CSJ LIMITS

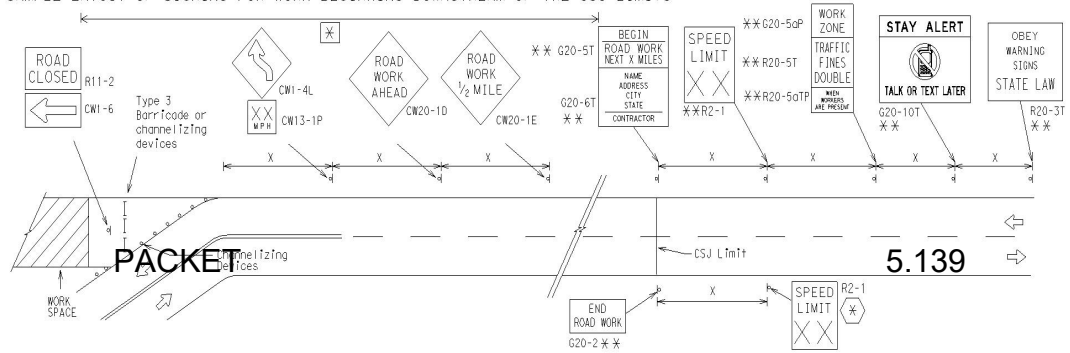

NOTES

The Contractor shall determine the appropriate distance to be placed on the G20-1 series signs and "BEGIN ROAD WORK NEXT X MILES"(G20-5T)sign for each specific project. This distance shall replace the "X" and shall be rounded to the nearest whole mile with the approval of the Engineer. No decimals shall be used.

(*) The "BEGIN WORK ZONE"(G20-9TP) and "END WORK ZONE" (G20-2bT) shall be used as shown on the sample layout when advance signs are required outside the CSJ Limits. They inform the motorist of entering or leaving a part of the work zone lying outside the CSJ Limits where traffic fines may double if workers are present.

** Required CSJ Limit signing. See Note 10 on BC(1). TRAFFIC FINES DOUBLE signs will not be required on projects consisting solely of mobile operations work.

[X] Area for placement of "ROAD WORK AHEAD" (CW20-1D)sign and other signs or devices as called for on the Traffic Control Plan.

(*) Contractor will install a regulatory speed limit sign at the end of the work zone.

LEGEND	
⊢⊣	Type 3 Barricade
○ ○ ○	Channelizing Devices
▬	Sign
X	See Typical Construction Warning Sign SIze and Spacing chart or the TMUTCD for sign spacing requirements.

SHEET 2 OF 12

Texas Department of Transportation | Traffic Operations Division Standard

BARRICADE AND CONSTRUCTION PROJECT LIMITS

BC(2)-14

FILE: bc-14.dgn	DN: TxDOT	CK: TxDOT	DW: TxDOT	CK: TxDOT
©TxDOT November 2002	CONT	SECT	JOB	HIGHWAY
REVISIONS	.	.	.	.
9-07 8-14	DIST	COUNTY		SHEET NO.
7-13	.	.		15

96

DATE:
FILE:

PACKET 5.139 July 11, 2023

TYPICAL APPLICATION OF WORK ZONE SPEED LIMIT SIGNS

Work zone speed limits shall be regulatory, established in accordance with the "Procedures for Establishing Speed Zones," and approved by the Texas Transportation Commission, or by City Ordinance when within Incorporated City Limits.

Reduced speeds should only be posted in the vicinity of work activity and not throughout the entire project.
Regulatory work zone speed signs (R2-1) shall be removed or covered during periods when they are not needed.

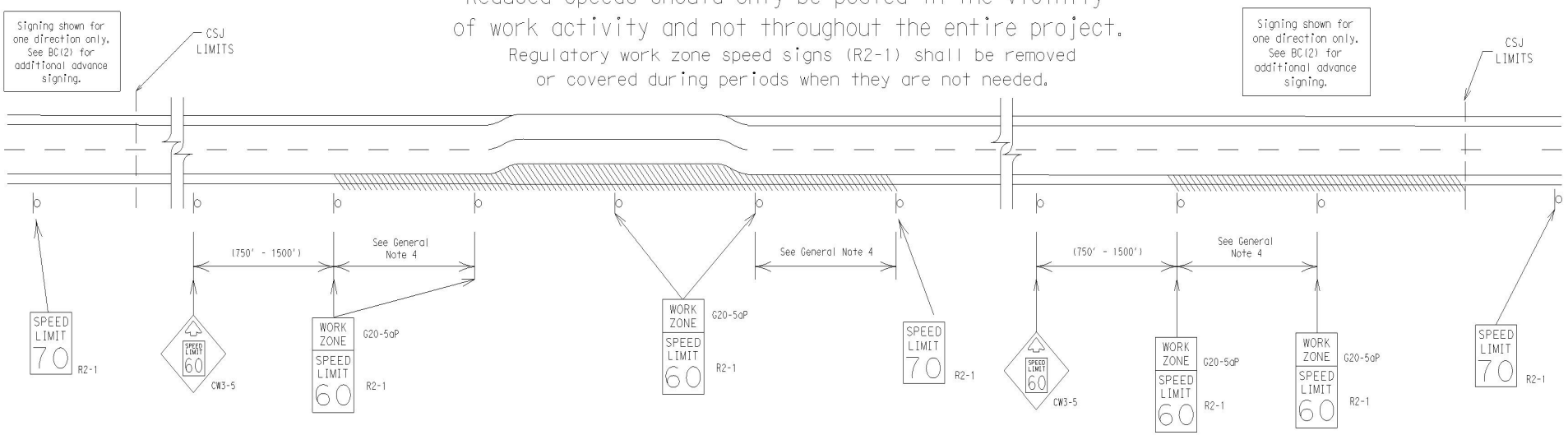

GUIDANCE FOR USE:

LONG/INTERMEDIATE TERM WORK ZONE SPEED LIMITS

This type of work zone speed limit should be included on the design of the traffic control plans when restricted geometrics with a lower design speed are present in the work zone and modification of the geometrics to a higher design speed is not feasible.

Long/Intermediate Term Work Zone Speed Limit signs, when approved as described above, should be posted and visible to the motorist when work activity is present. Work activity may also be defined as a change in the roadway that requires a reduced speed for motorists to safely negotiate the work area, including:

a) rough road or damaged pavement surface
b) substantial alteration of roadway geometrics (diversions)
c) construction detours
d) grade
e) width
f) other conditions readily apparent to the driver

As long as any of these conditions exist, the work zone speed limit signs should remain in place.

SHORT TERM WORK ZONE SPEED LIMITS

This type of work zone speed limit may be included on the design of the traffic control plans when workers or equipment are not behind concrete barrier, when work activity is within 10 feet of the traveled way or actually in the travelled way.

Short Term Work Zone Speed Limit signs should be posted and visible to the motorists only when work activity is present. When work activity is not present, signs shall be removed or covered.
(See Removing or Covering on BC(4)).

GENERAL NOTES

1. Regulatory work zone speed limits should be used only for sections of construction projects where speed control is of major importance.
2. Regulatory work zone speed limit signs shall be placed on supports at a 7 foot minimum mounting height.
3. Speed zone signs are illustrated for one direction of travel and are normally posted for each direction of travel.
4. Frequency of work zone speed limit signs should be:
   40 mph and greater 0.2 to 2 miles
   35 mph and less 0.2 to 1 mile
5. Regulatory speed limit signs shall have black legend and border on a white reflective background (See "Reflective Sheeting" on BC(4)).
6. Fabrication, erection and maintenance of the "ADVANCE SPEED LIMIT" (CW3-5) sign, "WORK ZONE" (G20-5aP) plaque and the "SPEED LIMIT" (R2-1) signs shall not be paid for directly, but shall be considered subsidiary to Item 502.
7. Turning signs from view, laying signs over or down will not be allowed, unless as otherwise noted under "REMOVING OR COVERING" on BC(4).
8. Techniques that may help reduce traffic speeds include but are not limited to:
   A. Law enforcement.
   B. Flagger stationed next to sign.
   C. Portable changeable message sign (PCMS).
   D. Low-power (drone) radar transmitter.
   E. Speed monitor trailers or signs.
9. Speeds shown on details above are for illustration only. Work Zone Speed Limits should only be posted as approved for each project.
10. For more specific guidance concerning the type of work, work zone conditions and factors impacting allowable regulatory construction speed zone reduction see TxDOT form #1204 in the TxDOT e-form system.

DISCLAIMER:
The use of this standard is governed by the "Texas Engineering Practice Act". No warranty of any kind is made by TxDOT for any purpose whatsoever. TxDOT assumes no responsibility for the conversion or for this standard to other formats or for incorrect results or damages resulting from its use.

DATE:
FILE:

SHEET 3 OF 12

Texas Department of Transportation | Traffic Operations Division Standard

BARRICADE AND CONSTRUCTION WORK ZONE SPEED LIMIT

BC(3)-14

FILE: bc-14.dgn	DN: TxDOT	CK: TxDOT	DW: TxDOT	CK: TxDOT
©TxDOT November 2002	CONT	SECT	JOB	HIGHWAY
REVISIONS 9-07 8-14 7-13	DIST	COUNTY		SHEET NO. 16

97

DISCLAIMER:
The use of this standard is governed by the "Texas Engineering Practice Act". No warranty of any kind is made by TxDOT for any purpose whatsoever. TxDOT assumes no responsibility for the conversion of this standard to other formats or for incorrect results or damages resulting from its use.

TYPICAL MINIMUM CLEARANCES FOR LONG TERM AND INTERMEDIATE TERM SIGNS

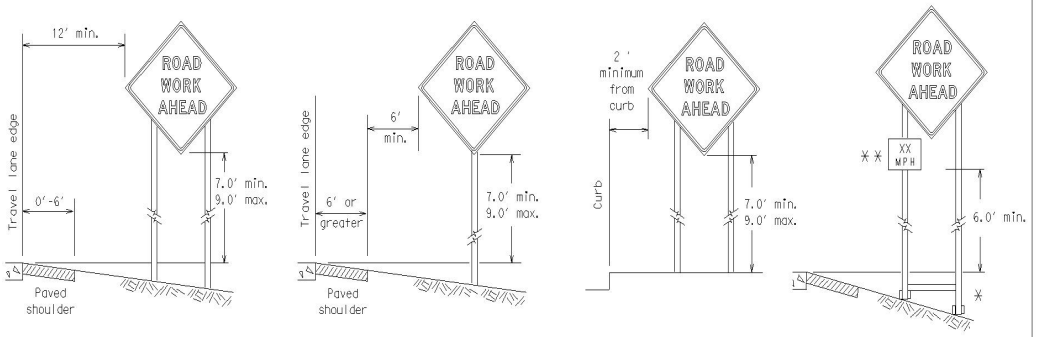

* When placing skid supports on unlevel ground, the leg post lengths must be adjusted so the sign appears straight and plumb. Objects shall NOT be placed under skids as a means of leveling.

** When plaques are placed on dual-leg supports, they should be attached to the upright nearest the travel lane. Supplemental plaques (advisory or distance) should not cover the surface of the parent sign.

ATTACHMENT FOR SIGN SUPPORTS

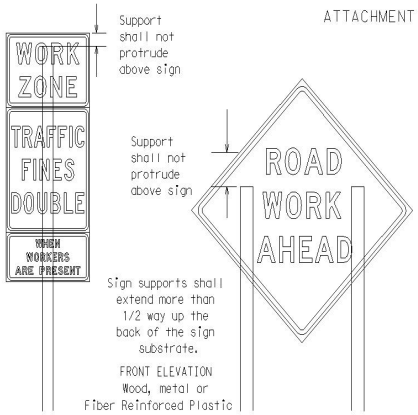

Splicing embedded perforated square metal tubing in order to extend post height will only be allowed when the splice is made using four bolts, two above and two below the spice point. Splice must be located entirely behind the sign substrate, not near the base of the support. Splice insert lengths should be at least 5 times nominal post size, centered on the splice and of at least the same gauge material.

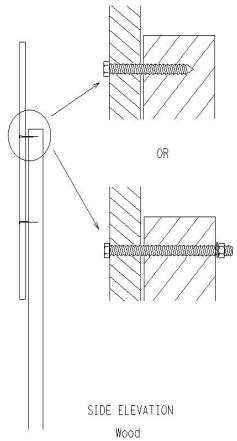

Attachment to wooden supports will be by bolts and nuts or screws. Use TxDOT's or manufacturer's recommended procedures for attaching sign substrates to other types of sign supports

Nails shall NOT be allowed. Each sign shall be attached directly to the sign support. Multiple signs shall not be joined or spliced by any means. Wood supports shall not be extended or repaired by splicing or other means.

STOP/SLOW PADDLES

1. STOP/SLOW paddles are the primary method to control traffic by flaggers. The STOP/SLOW paddle size should be 24" x 24" as detailed below.
2. When used at night, the STOP/SLOW paddle shall be retroreflectorized.
3. STOP/SLOW paddles may be attached to a staff with a minimum length of 6' to the bottom of the sign.
4. Any lights incorporated into the STOP or SLOW paddle faces shall only be as specifically described in Section 6E.03 Hand Signaling Devices in the TMUTCD.

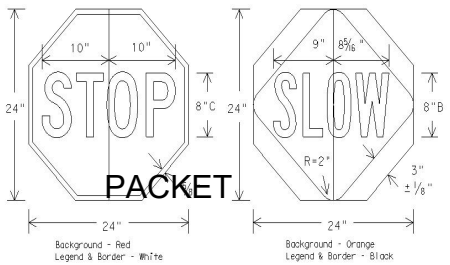

CONTRACTOR REQUIREMENTS FOR MAINTAINING PERMANENT SIGNS WITHIN THE PROJECT LIMITS

1. Permanent signs are used to give notice of traffic laws or regulations, call attention to conditions that are potentially hazardous to traffic operations, show route designations, destinations, directions, distances, services, points of interest, and other geographical, recreational, or cultural information. Drivers proceeding through a work zone need the same, if not better route guidance as normally installed on a roadway without construction.
2. When permanent regulatory or warning signs conflict with work zone conditions, remove or cover the permanent signs until the permanent sign message matches the roadway condition.
3. When existing permanent signs are moved and relocated due to construction purposes, they shall be visible to motorists at all times.
4. If existing signs are to be relocated on their original supports, they shall be installed on crashworthy bases as shown on the SMD Standard sheets. The signs shall meet the required mounting heights shown on the BC Sheets or the SMD Standards. This work should be paid for under the appropriate pay item for relocating existing signs.
5. If permanent signs are to be removed and relocated using temporary supports, the Contractor shall use crashworthy supports as shown on the BC sheets or the CWZTCD. The signs shall meet the required mounting heights shown on the BC Sheets or the SMD Standards during construction. This work should be paid for under the appropriate pay item for relocating existing signs.
6. Any sign or traffic control device that is struck or damaged by the contractor or his/her construction equipment shall be replaced as soon as possible by the Contractor to ensure proper guidance for the motorists. This will be subsidiary to Item 502.

GENERAL NOTES FOR WORK ZONE SIGNS

1. Contractor shall install and maintain signs in a straight and plumb condition and/or as directed by the Engineer.
2. Wooden sign posts shall be painted white.
3. Barricades shall NOT be used as sign supports.
4. All signs shall be installed in accordance with the plans or as directed by the Engineer. Signs shall be used to regulate, warn, and guide the traveling public safely through the work zone.
5. The Contractor may furnish either the sign design shown in the plans or in the "Standard Highway Sign Designs for Texas" (SHSD). The Engineer/Inspector may require the Contractor to furnish other work zone signs that are shown in the TMUTCD but may have been omitted from the plans. Any variation in the plans shall be documented by written agreement between the Engineer and the Contractor's Responsible Person. All changes must be documented in writing before being implemented. This can include documenting the changes in the Inspector's TxDOT diary and having both the Inspector and Contractor initial and date the agreed upon changes.
6. The Contractor shall furnish sign supports listed in the "Compliant Work Zone Traffic Control Device List" (CWZTCD). The Contractor shall install the sign support in accordance with the manufacturer's recommendations. If there is a question regarding installation procedures, the Contractor shall furnish the Engineer a copy of the manufacturer's installation recommendations so the Engineer can verify the correct procedures are being followed.
7. The Contractor is responsible for installing signs on approved supports and replacing signs with damaged or cracked substrates and/or damaged or marred reflective sheeting as directed by the Engineer/Inspector.
8. Identification markings may be shown only on the back of the sign substrate. The maximum height of letters and/or company logos used for identification shall be 1 inch.
9. The Contractor shall replace damaged wood posts. New or damaged wood sign posts shall not be spliced.

DURATION OF WORK (as defined by the "Texas Manual on Uniform Traffic Control Devices" Part 6)

1. The types of sign supports, sign mounting height, the size of signs, and the type of sign substrates can vary based on the type of work being performed. The Engineer is responsible for selecting the appropriate size sign for the type of work being performed. The Contractor is responsible for ensuring the sign support, sign mounting height and substrate meets manufacturer's recommendations in regard to crashworthiness and duration of work requirements.
   a. Long-term stationary - work that occupies a location more than 3 days.
   b. Intermediate-term stationary - work that occupies a location more than one daylight period up to 3 days, or nighttime work lasting more than one hour.
   c. Short-term stationary - daytime work that occupies a location for more than 1 hour in a single daylight period.
   d. Short, duration - work that occupies a location up to 1 hour.
   e. Mobile - work that moves continuously or intermittently (stopping for up to approximately 15 minutes.)

SIGN MOUNTING HEIGHT

1. The bottom of Long-term/Intermediate-term signs shall be at least 7 feet, but not more than 9 feet, above the paved surface, except as shown for supplemental plaques mounted below other signs.
2. The bottom of Short-term/Short Duration signs shall be a minimum of 1 foot above the pavement surface but no more than 2 feet above the ground.
3. Long-term/Intermediate-term Signs may be used in lieu of Short-term/Short Duration signing.
4. Short-term/Short Duration signs shall be used only during daylight and shall be removed at the end of the workday or raised to appropriate Long-term/Intermediate sign height.
5. Regulatory signs shall be mounted at least 7 feet, but not more than 9 feet, above the paved surface regardless of work duration.

SIZE OF SIGNS

1. The Contractor shall furnish the sign sizes shown on BC (2) unless otherwise shown in the plans or as directed by the Engineer.

SIGN SUBSTRATES

1. The Contractor shall ensure the sign substrate is installed in accordance with the manufacturer's recommendations for the type of sign support that is being used. The CWZTCD lists each substrate that can be used on the different types and models of sign supports.
2. "Mesh" type materials are NOT an approved sign substrate, regardless of the tightness of the weave.
3. All wooden individual sign panels fabricated from 2 or more pieces shall have one or more plywood cleat, 1/2" thick by 6" wide, fastened to the back of the sign and extending fully across the sign. The cleat shall be attached to the back of the sign using wood screws that do not penetrate the face of the sign panel. The screws shall be placed on both sides of the splice and spaced at 6" centers. The Engineer may approve other methods of splicing the sign face.

REFLECTIVE SHEETING

1. All signs shall be retroreflective and constructed of sheeting meeting the color and retro-reflectivity requirements of DMS-8300 for rigid signs or DMS-8310 for roll-up signs. The web address for DMS specifications is shown on BC(1).
2. White sheeting, meeting the requirements of DMS-8300 Type A, shall be used for signs with a white background.
3. Orange sheeting, meeting the requirements of DMS-8300 Type B_{FL} or Type C_{FL}, shall be used for rigid signs with orange backgrounds.

SIGN LETTERS

1. All sign letters and numbers shall be clear, and open rounded type uppercase alphabet letters as approved by the Federal Highway Administration (FHWA) and as published in the "Standard Highway Sign Design for Texas" manual. Signs, letters and numbers shall be of first class workmanship in accordance with Department Standards and Specifications.

REMOVING OR COVERING

1. When sign messages may be confusing or do not apply, the signs shall be removed or completely covered.
2. Long-term stationary or intermediate stationary signs installed on square metal tubing may be turned away from traffic 90 degrees when the sign message is not applicable. This technique may not be used for signs installed in the median of divided highways or near any intersections where the sign may be seen from approaching traffic.
3. Signs installed on wooden skids shall not be turned at 90 degree angles to the roadway. These signs should be removed or completely covered when not required.
4. When signs are covered, the material used shall be opaque, such as heavy mil black plastic, or other materials which will cover the entire sign face and maintain their opaque properties under automobile headlights at night, without damaging the sign sheeting.
5. Burlap shall NOT be used to cover signs.
6. Duct tape or other adhesive material shall NOT be affixed to a sign face.
7. Signs and anchor stubs shall be removed and holes backfilled upon completion of work.

SIGN SUPPORT WEIGHTS

1. Where sign supports require the use of weights to keep from turning over, the use of sandbags with dry, cohesionless sand should be used.
2. The sandbags will be tied shut to keep the sand from spilling and to maintain a constant weight.
3. Rock, concrete, iron, steel or other solid objects shall not be permitted for use as sign support weights.
4. Sandbags should weigh a minimum of 35 lbs and a maximum of 50 lbs.
5. Sandbags shall be made of a durable material that tears upon vehicular impact. Rubber (such as tire inner tubes) shall NOT be used.
6. Rubber ballasts designed for channelizing devices should not be used for ballast on portable sign supports. Sign supports designed and manufactured with rubber bases may be used when shown on the CWZTCD list.
7. Sandbags shall only be placed along or laid over the base supports of the traffic control device and shall not be suspended above ground level or hung with rope, wire, chains or other fasteners. Sandbags shall be placed along the length of the skids to weigh down the sign support.
8. Sandbags shall NOT be placed under the skid and shall not be used to level sign supports placed on slopes.

FLAGS ON SIGNS

1. Flags may be used to draw attention to warning signs. When used the flag shall be 16 inches square or larger and shall be orange or fluorescent red-orange in color. Flags shall not be allowed to cover any portion of the sign face.

Texas Department of Transportation — Traffic Operations Division Standard

BARRICADE AND CONSTRUCTION TEMPORARY SIGN NOTES

BC(4)-14

FILE: bc-14.dgn	DN: TxDOT	CK: TxDOT	DW: TxDOT	CK: TxDOT
©TxDOT November 2002	CONT	SECT	JOB	HIGHWAY
REVISIONS	.	.	.	.
9-07 8-14	DIST	COUNTY		SHEET NO.
7-13	.	.		17

98

DATE:
FILE:

PACKET 5.141 July 11, 2023

DISCLAIMER:
The use of this standard is governed by the "Texas Engineering Practice Act". No warranty of any kind is made by TxDOT for any purpose whatsoever. TxDOT assumes no responsibility for the conversion of this standard to other formats or for incorrect results or damages resulting from its use.

DATE:
FILE:

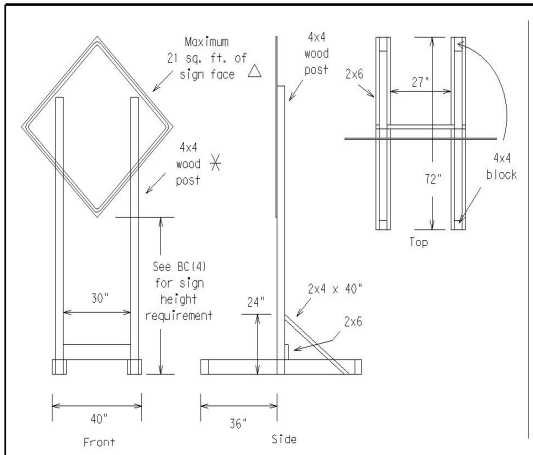

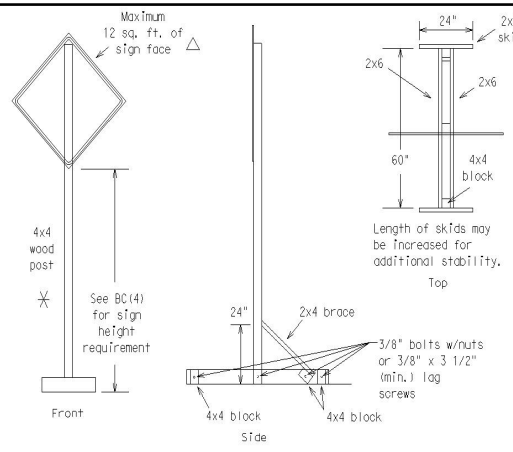

SKID MOUNTED WOOD SIGN SUPPORTS

LONG/INTERMEDIATE TERM STATIONARY - PORTABLE SKID MOUNTED SIGN SUPPORTS □

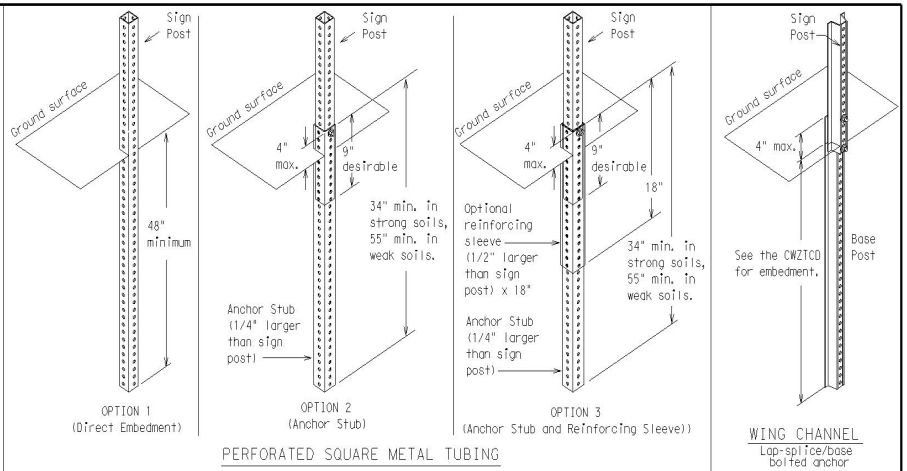

PERFORATED SQUARE METAL TUBING

GROUND MOUNTED SIGN SUPPORTS

Refer to the CWZTCD and the manufacturer's installation procedure for each type sign support.
The maximum sign square footage shall adhere to the manufacturer's recommendation.
Two post installations can be used for larger signs.

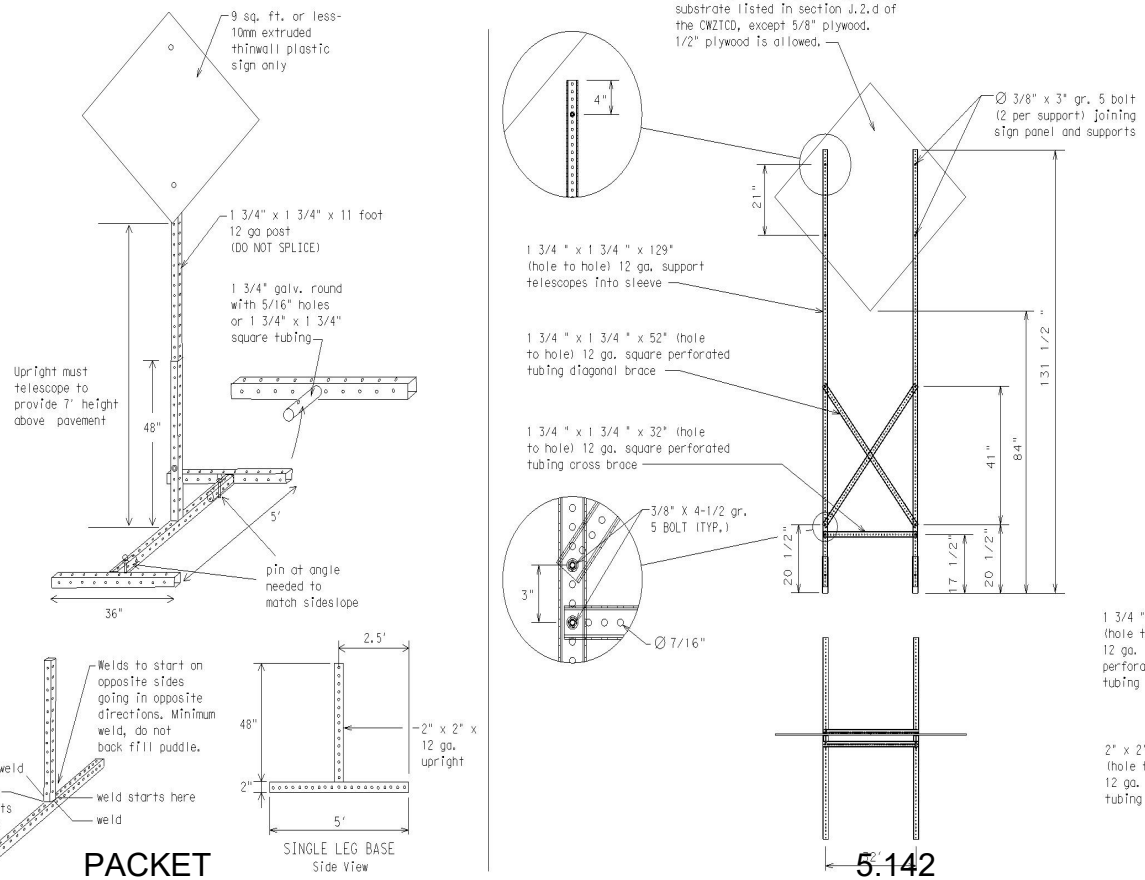

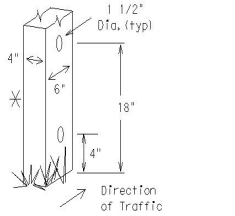

Nominal Post Size	Number of Posts	Maximum Sq. feet of Sign Face	Minimum Soil Embedment	Drilled Hole(s) Required
4 x 4	1	12	36"	NO
4 x 4	2	21	36"	NO
4 x 6	1	21	36"	YES
4 x 6	2	36	36"	YES

WOOD POST SYSTEM FOR GROUND MOUNTED SIGN SUPPORTS

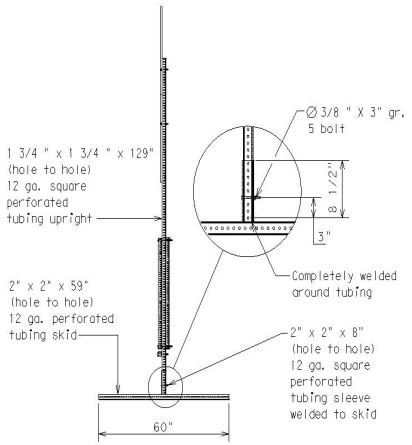

WEDGE ANCHORS

Both steel and plastic Wedge Anchor Systems as shown on the SMD Standard Sheets may be used as temporary sign supports for signs up to 10 square feet of sign face. They may be set in concrete or in sturdy soils if approved by the Engineer. (See web address for "Traffic Engineering Standard Sheets" on BC(1)).

OTHER DESIGNS

MORE DETAILS OF APPROVED LONG/INTERMEDIATE AND SHORT TERM SUPPORTS CAN BE FOUND ON THE CWZTCD LIST. SEE BC(1) FOR WEBSITE LOCATION.

GENERAL NOTES

1. Nails may be used in the assembly of wooden sign supports, but 3/8" bolts with nuts or 3/8" x 3 1/2" lag screws must be used on every joint for final connection.
2. No more than 2 sign posts shall be placed within a 7 ft. circle, except for specific materials noted on the CWZTCD List.
3. When project is completed, all sign supports and foundations shall be removed from the project site. This will be considered subsidiary to Item 502.

□ See BC(4) for definition of "Work Duration."

✳ Wood sign posts MUST be one piece. Splicing will NOT be allowed. Posts shall be painted white.

△ See the CWZTCD for the type of sign substrate that can be used for each approved sign support.

SHEET 5 OF 12

Texas Department of Transportation | Traffic Operations Division Standard

BARRICADE AND CONSTRUCTION TYPICAL SIGN SUPPORT

BC(5)-14

FILE: bc-14_sign	DN: TxDOT	CK: TxDOT	DW: TxDOT	CK: TxDOT
©TxDOT November 2002	CONT	SECT	JOB	HIGHWAY
REVISIONS	.	.	.	.
9-07 8-14	DIST	COUNTY		SHEET NO.
7-13	.	.		18
99				

SKID MOUNTED PERFORATED SQUARE STEEL TUBING SIGN SUPPORTS

WHEN NOT IN USE, REMOVE THE PCMS FROM THE RIGHT-OF-WAY OR PLACE THE PCMS BEHIND BARRIER OR GUARDRAIL WITH SIGN PANEL TURNED PARALLEL TO TRAFFIC

PORTABLE CHANGEABLE MESSAGE SIGNS

1. The Engineer/Inspector shall approve all messages used on portable changeable message signs (PCMS).
2. Messages on PCMS should contain no more than 8 words (about four to eight characters per word), not including simple words such as "TO," "FOR," "AT," etc.
3. Messages should consist of a single phase, or two phases that alternate. Three-phase messages are not allowed. Each phase of the message should convey a single thought, and must be understood by itself.
4. Use the word "EXIT" to refer to an exit ramp on a freeway; i.e., "EXIT CLOSED." Do not use the term "RAMP."
5. Always use the route or interstate designation (IH, US, SH, FM) along with the number when referring to a roadway.
6. When in use the bottom of a stationary PCMS message panel should be a minimum 7 feet above the roadway, where possible.
7. The message term "WEEKEND" should be used only if the work is to start on Saturday morning and end by Sunday evening at midnight. Actual days and hours of work should be displayed on the PCMS if work is to begin on Friday evening and/or continue into Monday morning.
8. The Engineer/Inspector may select one of two options which are available for displaying a two-phase message on a PCMS. Each phase may be displayed for either four seconds each or for three seconds each.
9. Do not "flash" messages or words included in a message. The message should be steady burn or continuous while displayed.
10. Do not present redundant information on a two-phase message; i.e., keeping two lines of the message the same and changing the third line.
11. Do not use the word "Danger" in message.
12. Do not display the message "LANES SHIFT LEFT" or "LANES SHIFT RIGHT" on a PCMS. Drivers do not understand the message.
13. Do not display messages that scroll horizontally or vertically across the face of the sign.
14. The following table lists abbreviated words and two-word phrases that are acceptable for use on a PCMS. Both words in a phrase must be displayed together. Words or phrases not on this list should not be abbreviated, unless shown in the TMUTCD.
15. PCMS character height should be at least 18 inches for trailer mounted units. They should be visible from at least 1/2 (.5) mile and the text should be legible from at least 600 feet at night and 800 feet in daylight. Truck mounted units must have a character height of 10 inches and must be legible from at least 400 feet.
16. Each line of text should be centered on the message board rather than left or right justified.
17. If disabled, the PCMS should default to an illegible display that will not alarm motorists and will only be used to alert workers that the PCMS has malfunctioned. A pattern such as a series of horizontal solid bars is appropriate.

WORD OR PHRASE	ABBREVIATION
Access Road	ACCS RD
Alternate	ALT
Avenue	AVE
Best Route	BEST RTE
Boulevard	BLVD
Bridge	BRDG
Cannot	CANT
Center	CTR
Construction Ahead	CONST AHD
CROSSING	XING
Detour Route	DETOUR RTE
Do Not	DONT
East	E
Eastbound	(route) E
Emergency	EMER
Emergency Vehicle	EMER VEH
Entrance, Enter	ENT
Express Lane	EXP LN
Expressway	EXPWY
XXXX Feet	XXXX FT
Fog Ahead	FOG AHD
Freeway	FRWY, FWY
Freeway Blocked	FWY BLKD
Friday	FRI
Hazardous Driving	HAZ DRIVING
Hazardous Material	HAZMAT
High-Occupancy	HOV
Vehicle Highway	HWY
Hour(s)	HR, HRS
Information	INFO
It Is	ITS
Junction	JCT
Left	LFT
Left Lane	LANE LEFT
Lane Closed	LN CLSD
Lower Level	LWR LEVEL
Maintenance	MAINT

WORD OR PHRASE	ABBREVIATION
Major	MAJ
Miles	MI
Miles Per Hour	MPH
Minor	MNR
Monday	MON
Normal	NORM
North	N
Northbound	(route) N
Parking	PKING
Road	RD
Right Lane	RT LN
Saturday	SAT
Service Road	SERV RD
Shoulder	SHLDR
Slippery	SLIP
South	S
Southbound	(route) S
Speed	SPD
Street	ST
Sunday	SUN
Telephone	PHONE
Temporary	TEMP
Thursday	THURS
To Downtown	TO DWNTN
Traffic	TRAF
Travelers	TRVLRS
Tuesday	TUES
Time Minutes	TIME MIN
Upper Level	UPR LEVEL
Vehicles (s)	VEH, VEHS
Warning	WARN
Wednesday	WED
Weight Limit	WT LIMIT
West	W
Westbound	(route) W
Wet Pavement	WET PVMT
Will Not	WONT

Roadway designation # IH-number, US-number, SH-number, FM-number

RECOMMENDED PHASES AND FORMATS FOR PCMS MESSAGES DURING ROADWORK ACTIVITIES

(The Engineer may approve other messages not specifically covered here.)

Phase 1: Condition Lists

Road/Lane/Ramp Closure List

FREEWAY CLOSED X MILE	FRONTAGE ROAD CLOSED
ROAD CLOSED AT SH XXX	SHOULDER CLOSED XXX FT
ROAD CLSD AT FM XXXX	RIGHT LN CLOSED XXX FT
RIGHT X LANES CLOSED	RIGHT X LANES OPEN
CENTER LANE CLOSED	DAYTIME LANE CLOSURES
NIGHT LANE CLOSURES	I-XX SOUTH EXIT CLOSED
VARIOUS LANES CLOSED	EXIT XXX CLOSED X MILE
EXIT CLOSED	RIGHT LN TO BE CLOSED
MALL DRIVEWAY CLOSED	X LANES CLOSED TUE - FRI
XXXXXXXX BLVD CLOSED	

Other Condition List

ROADWORK XXX FT	ROAD REPAIRS XXXX FT
FLAGGER XXXX FT	LANE NARROWS XXXX FT
RIGHT LN NARROWS XXXX FT	TWO-WAY TRAFFIC XX MILE
MERGING TRAFFIC XXXX FT	CONST TRAFFIC XXX FT
LOOSE GRAVEL XXXX FT	UNEVEN LANES XXXX FT
DETOUR X MILE	ROUGH ROAD XXXX FT
ROADWORK PAST SH XXXX	ROADWORK NEXT FRI-SUN
BUMP XXXX FT	US XXX EXIT X MILES
TRAFFIC SIGNAL XXXX FT	LANES SHIFT *

* LANES SHIFT in Phase 1 must be used with STAY IN LANE in Phase 2.

Phase 2: Possible Component Lists

Action to Take/Effect on Travel List

MERGE RIGHT	FORM X LINES RIGHT
DETOUR NEXT X EXITS	USE XXXXX RD EXIT
USE EXIT XXX	USE EXIT I-XX NORTH
STAY ON US XXX SOUTH	USE I-XX E TO I-XX N
TRUCKS USE US XXX N	WATCH FOR TRUCKS
WATCH FOR TRUCKS	EXPECT DELAYS
EXPECT DELAYS	PREPARE TO STOP
REDUCE SPEED XXX FT	END SHOULDER USE
USE OTHER ROUTES	WATCH FOR WORKERS
STAY IN LANE *	

Location List

AT FM XXXX
BEFORE RAILROAD CROSSING
NEXT X MILES
PAST US XXX EXIT
XXXXXXX TO XXXXXXX
US XXX TO FM XXXX

Warning List

SPEED LIMIT XX MPH
MAXIMUM SPEED XX MPH
MINIMUM SPEED XX MPH
ADVISORY SPEED XX MPH
RIGHT LANE EXIT
USE CAUTION
DRIVE SAFELY
DRIVE WITH CARE

** Advance Notice List

TUE-FRI XX AM- X PM
APR XX- XX X PM-X AM
BEGINS MONDAY
BEGINS MAY XX
MAY X-X XX PM - XX AM
NEXT FRI-SUN
XX AM TO XX PM
NEXT TUE AUG XX
TONIGHT XX PM- XX AM

* STAY IN LANE in Phase 2 must be used with LANES SHIFT in Phase 1.

** See Application Guidelines Note 6.

APPLICATION GUIDELINES

1. Only 1 or 2 phases are to be used on a PCMS.
2. The 1st phase (or both) should be selected from the "Road/Lane/Ramp Closure List" and the "Other Condition List".
3. A 2nd phase can be selected from the "Action to Take/Effect on Travel, Location, General Warning, or Advance Notice Phase Lists".
4. A Location Phase is necessary only if a distance or location is not included in the first phase selected.
5. If two PCMS are used in sequence, they must be separated by a minimum of 1000 ft. Each PCMS shall be limited to two phases, and should be understandable by themselves.
6. For advance notice, when the current date is within seven days of the actual work date, calendar days should be replaced with days of the week. Advance notification should typically be for no more than one week prior to the work.

WORDING ALTERNATIVES

1. The words RIGHT, LEFT and ALL can be interchanged as appropriate.
2. Roadway designations IH, US, SH, FM and LP can be interchanged as appropriate.
3. EAST, WEST, NORTH and SOUTH (or abbreviations E, W, N and S) can be interchanged as appropriate.
4. Highway names and numbers replaced as appropriate.
5. ROAD, HIGHWAY and FREEWAY can be interchanged as needed.
6. AHEAD may be used instead of distances if necessary.
7. FT and MI, MILE and MILES interchanged as appropriate.
8. AT, BEFORE and PAST interchanged as needed.
9. Distances or AHEAD can be eliminated from the message if a location phase is used.

PCMS SIGNS WITHIN THE R.O.W. SHALL BE BEHIND GUARDRAIL OR CONCRETE BARRIER OR SHALL HAVE A MINIMUM OF FOUR (4) PLASTIC DRUMS PLACED PERPENDICULAR TO TRAFFIC ON THE UPSTREAM SIDE OF THE PCMS, WHEN EXPOSED TO ONE DIRECTION OF TRAFFIC. WHEN EXPOSED TO TWO WAY TRAFFIC, THE FOUR DRUMS SHOULD BE PLACED WITH ONE DRUM AT EACH OF THE FOUR CORNERS OF THE UNIT.

FULL MATRIX PCMS SIGNS

1. When Full Matrix PCMS signs are used, the character height and legibility/visibility requirements shall be maintained as listed in Note 15 under "PORTABLE CHANGEABLE MESSAGE SIGNS" above.
2. When symbol signs, such as the "Flagger Symbol" (CW20-7) are represented graphically on the Full Matrix PCMS sign and, with the approval of the Engineer, it shall maintain the legibility/visibility requirement listed above.
3. When symbol signs are represented graphically on the Full Matrix PCMS, they shall only supplement the use of the static sign represented, and shall not substitute for, or replace that sign.
4. A full matrix PCMS may be used to simulate a flashing arrow board provided it meets the visibility, flash rate and dimming requirements on BC(7), for the same size arrow.

SHEET 6 OF 12

Texas Department of Transportation | Traffic Operations Division Standard

BARRICADE AND CONSTRUCTION PORTABLE CHANGEABLE MESSAGE SIGN (PCMS)

BC(6)-14

FILE:	DN: TxDOT	CK: TxDOT	DW: TxDOT	CK: TxDOT
©TxDOT November 2002	CONT	SECT	JOB	HIGHWAY
REVISIONS	.	.	.	.
9-07 8-14	DIST	COUNTY		SHEET NO.
7-13	.	.		19

100

DISCLAIMER:
The use of this standard is governed by the "Texas Engineering Practice Act". No warranty of any kind is made by the Texas Department of Transportation for any purpose whatsoever. TxDOT disclaims all liability for the conversion of this standard to other formats or for incorrect results or damages resulting from its use.

DATE:
FILE:

PACKET 5.143 July 11, 2023

DISCLAIMER:
The use of this standard is governed by the "Texas Engineering Practice Act". No warranty of any kind is made by TxDOT for any purpose whatsoever. TxDOT assumes no responsibility for the conversion of this standard to other formats or for incorrect results or damages resulting from its use.

DATE:
FILE:

1. Barrier Reflectors shall be pre-qualified, and conform to the color and reflectivity requirements of DMS-8600. A list of prequalified Barrier Reflectors can be found at the Material Producer List web address shown on BC(1).
2. Color of Barrier Reflectors shall be as specified in the TMUTCD. The cost of the reflectors shall be considered subsidiary to Item 512.

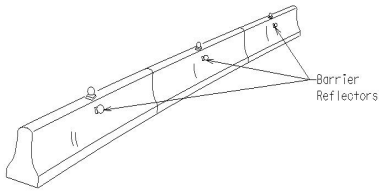

CONCRETE TRAFFIC BARRIER (CTB)

3. Where traffic is on one side of the CTB, two (2) Barrier Reflectors shall be mounted in approximately the midsection of each section of CTB. An alternate mounting location is uniformly spaced at one end of each CTB. This will allow for attachment of a barrier grapple without damaging the reflector. The Barrier Reflector mounted on the side of the CTB shall be located directly below the reflector mounted on top of the barrier, as shown in the detail above.
4. Where CTB separates two-way traffic, three barrier reflectors shall be mounted on each section of CTB. The reflector unit on top shall have two yellow reflective faces (Bi-Directional)while the reflectors on each side of the barrier shall have one yellow reflective face, as shown in the detail above.
5. When CTB separates traffic traveling in the same direction, no barrier reflectors will be required on top of the CTB.
6. Barrier Reflector units shall be yellow or white in color to match the edgeline being supplemented.
7. Maximum spacing of Barrier Reflectors is forty (40) feet.
8. Pavement markers or temporary flexible-reflective roadway marker tabs shall NOT be used as CTB delineation.
9. Attachment of Barrier Reflectors to CTB shall be per manufacturer's recommendations.
10. Missing or damaged Barrier Reflectors shall be replaced as directed by the Engineer.
11. Single slope barriers shall be delineated as shown on the above detail.

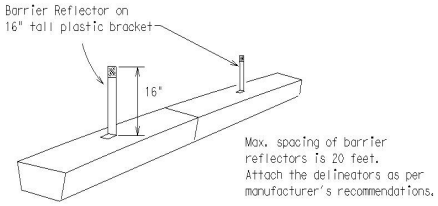

LOW PROFILE CONCRETE BARRIER (LPCB)

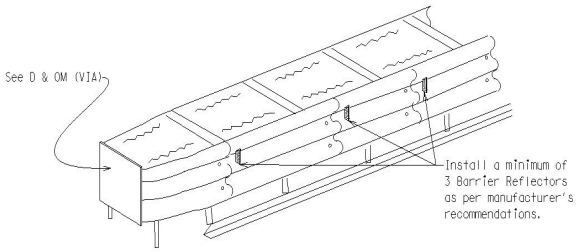

DELINEATION OF END TREATMENTS

END TREATMENTS FOR
CTB'S USED
IN WORK ZONES

End treatments used on CTB's in work zones shall meet crashworthy standards as defined in the National Cooperative Highway Research Report 350. Refer to the CWZTCD List for approved end treatments and manufacturers.

BARRIER REFLECTORS FOR CONCRETE TRAFFIC BARRIER AND ATTENUATORS

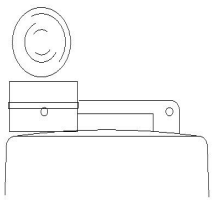

Type C Warning Light or approved substitute mounted on a drum adjacent to the travel way.

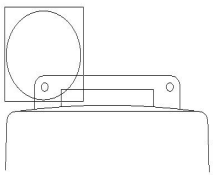

Warning reflector may be round or square. Must have a yellow reflective surface area of one side equal to 30 square inches.

WARNING LIGHTS

1. Warning lights shall meet the requirements of the TMUTCD.
2. Warning lights shall NOT be installed on barricades.
3. Type A-Low Intensity Flashing Warning Lights are commonly used with drums. They are intended to warn of or mark a potentially hazardous area. Their use shall be as indicated on this sheet and/or other sheets of the plans by the designation "FL". The Type A Warning Lights shall not be used with signs manufactured with Type B_{FL} or C_{FL} Sheeting meeting the requirements of Departmental Material Specification DMS-8300.
4. Type-C and Type D 360 degree Steady Burn Lights are intended to be used in a series for delineation to supplement other traffic control devices. Their use shall be as indicated on this sheet and/or other sheets of the plans by the designation "SB".
5. The Engineer/Inspector or the plans shall specify the location and type of warning lights to be installed on the traffic control devices.
6. When required by the Engineer, the Contractor shall furnish a copy of the warning lights certification. The warning light manufacturer will certify the warning lights meet the requirements of the latest ITE Purchase Specifications for Flashing and Steady-Burn Warning Lights.
7. When used to delineate curves, Type-C and Type D Steady Burn Lights should only be placed on the outside of the curve, not the inside.
8. The location of warning lights and warning reflectors on drums shall be as shown elsewhere in the plans.

WARNING LIGHTS MOUNTED ON PLASTIC DRUMS

1. Type A flashing warning lights are intended to warn drivers that they are approaching or are in a potentially hazardous area.
2. Type A random flashing warning lights are not intended for delineation and shall not be used in a series.
3. A series of sequential flashing warning lights placed on channelizing devices to form a merging taper may be used for delineation. If used, the successive flashing of the sequential warning lights should occur from the beginning of the taper to the end of the merging taper in order to identify the desired vehicle path. The rate of flashing for each light shall be 65 flashes per minute, plus or minus 10 flashes.
4. Type C and D steady-burn warning lights are intended to be used in a series to delineate the edge of the travel lane on detours, on lane changes, on lane closures, and on other similar conditions.
5. Type A, Type C and Type D warning lights shall be installed at locations as detailed on other sheets in the plans.
6. Warning lights shall not be installed on a drum that has a sign, chevron or vertical panel.
7. The maximum spacing for warning lights on drums should be identical to the channelizing device spacing.

WARNING REFLECTORS MOUNTED ON PLASTIC DRUMS AS A SUBSTITUTE FOR TYPE C (STEADY BURN) WARNING LIGHTS

1. A warning reflector or approved substitute may be mounted on a plastic drum as a substitute for a Type C, steady burn warning light at the discretion of the Contractor unless otherwise noted in the plans.
2. The warning reflector shall be yellow in color and shall be manufactured using a sign substrate approved for use with plastic drums listed on the CWZTCD.
3. The warning reflector shall have a minimum retroreflective surface area (one-side) of 30 square inches.
4. Round reflectors shall be fully reflectorized, including the area where attached to the drum.
5. Square substrates must have a minimum of 30 square inches of reflectorized sheeting. They do not have to be reflectorized where it attaches to the drum.
6. The side of the warning reflector facing approaching traffic shall have sheeting meeting the color and reflectivity requirements for DMS 8300-Type B or Type C.
7. When used near two-way traffic, both sides of the warning reflector shall be reflectorized.
8. The warning reflector should be mounted on the side of the handle nearest approaching traffic.
9. The maximum spacing for warning reflectors should be identical to the channelizing device spacing requirements.

Arrow Boards may be located behind channelizing devices in place for a shoulder taper or merging taper, otherwise they shall be delineated with four (4) channelizing devices placed perpendicular to traffic on the upstream side of traffic.

1. The Flashing Arrow Board should be used for all lane closures on multi-lane roadways, or slow moving maintenance or construction activities on the travel lanes.
2. Flashing Arrow Boards should not be used on two-lane, two-way roadways, detours, diversions or work on shoulders unless the "CAUTION" display (see detail below) is used.
3. The Engineer/Inspector shall choose all appropriate signs, barricades and/or other traffic control devices that should be used in conjunction with the Flashing Arrow Board.
4. The Flashing Arrow Board should be able to display the following symbols:

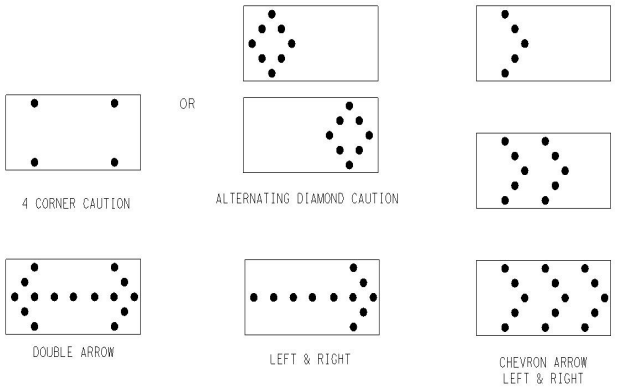

5. The "CAUTION" display consists of four corner lamps flashing simultaneously, or the Alternating Diamond Caution mode as shown.
6. The straight line caution display is NOT ALLOWED.
7. The Flashing Arrow Board shall be capable of minimum 50 percent dimming from rated lamp voltage. The flashing rate of the lamps shall not be less than 25 nor more than 40 flashes per minute.
8. Minimum lamp "on time" shall be approximately 50 percent for the flashing arrow and equal intervals of 25 percent for each sequential phase of the flashing chevron.
9. The sequential arrow display is NOT ALLOWED.
10. The flashing arrow display is the TxDOT standard; however, the sequential Chevron display may be used during daylight operations.
11. The Flashing Arrow Board shall be mounted on a vehicle, trailer or other suitable support.
12. A Flashing Arrow Board SHALL NOT BE USED to laterally shift traffic.
13. A full matrix PCMS may be used to simulate a Flashing Arrow Board provided it meets visibility, flash rate and dimming requirements on this sheet for the same size arrow.
14. Minimum mounting height of trailer mounted Arrow Boards should be 7 feet from roadway to bottom of panel.

REQUIREMENTS			
TYPE	MINIMUM SIZE	MINIMUM NUMBER OF PANEL LAMPS	MINIMUM VISIBILITY DISTANCE
B	30 x 60	13	3/4 mile
C	48 x 96	15	1 mile

ATTENTION
Flashing Arrow Boards shall be equipped with automatic dimming devices.

WHEN NOT IN USE, REMOVE THE ARROW BOARD FROM THE RIGHT-OF-WAY OR PLACE THE ARROW BOARD BEHIND CONCRETE TRAFFIC BARRIER OR GUARDRAIL.

FLASHING ARROW BOARDS

TRUCK-MOUNTED ATTENUATORS

1. Truck-mounted attenuators (TMA) used on TxDOT facilities must meet the requirements outlined in the National Cooperative Highway Research Report No. 350 (NCHRP 350) or the Manual for Assessing Safety Hardware (MASH).
2. Refer to the CWZTCD for the requirements of Level 2 or Level 3 TMAs.
3. Refer to the CWZTCD for a list of approved TMAs.
4. TMAs are required on freeways unless otherwise noted in the plans.
5. A TMA should be used anytime that it can be positioned 30 to 100 feet in advance of the area of crew exposure without adversely affecting the work performance.
6. The only reason a TMA should not be required is when a work area is spread down the roadway and the work crew is an extended distance from the TMA.

SHEET 7 OF 12

Texas Department of Transportation

Traffic Operations Division Standard

BARRICADE AND CONSTRUCTION ARROW PANEL, REFLECTORS, WARNING LIGHTS & ATTENUATOR

BC(7)-14

FILE: bc-14.dgn	DN: TxDOT	CK: TxDOT	DW: TxDOT	CK: TxDOT
©TxDOT November 2002	CONT	SECT	JOB	HIGHWAY
REVISIONS	.	.	.	.
9-07 8-14	DIST	COUNTY		SHEET NO.
7-13	.	.		20

101

DISCLAIMER:
The use of this standard is governed by the "Texas Engineering Practice Act". No warranty of any kind is made by TxDOT for any purpose whatsoever. TxDOT assumes no responsibility for the conversion of this standard to other formats or for incorrect results or damages resulting from its use.

GENERAL NOTES

1. For long term stationary work zones on freeways, drums shall be used as the primary channelizing device.
2. For intermediate term stationary work zones on freeways, drums should be used as the primary channelizing device but may be replaced in tangent sections by vertical panels, or 42" two-piece cones. In tangent sections one-piece cones may be used with the approval of the Engineer but only if personnel are present on the project at all times to maintain the cones in proper position and location.
3. For short term stationary work zones on freeways, drums are the preferred channelizing device but may be replaced in tapers, transitions and tangent sections by vertical panels, two-piece cones or one-piece cones as approved by the Engineer.
4. Drums and all related items shall comply with the requirements of the current version of the "Texas Manual on Uniform Traffic Control Devices" (TMUTCD) and the "Compliant Work Zone Traffic Control Devices List" (CWZTCD).
5. Drums, bases, and related materials shall exhibit good workmanship and shall be free from objectionable marks or defects that would adversely affect their appearance or serviceability.
6. The Contractor shall have a maximum of 24 hours to replace any plastic drums identified for replacement by the Engineer/Inspector. The replacement device must be an approved device.

GENERAL DESIGN REQUIREMENTS

Pre-qualified plastic drums shall meet the following requirements:

1. Plastic drums shall be a two-piece design; the "body" of the drum shall be the top portion and the "base" shall be the bottom.
2. The body and base shall lock together in such a manner that the body separates from the base when impacted by a vehicle traveling at a speed of 20 MPH or greater but prevents accidental separation due to normal handling and/or air turbulence created by passing vehicles.
3. Plastic drums shall be constructed of lightweight flexible, and deformable materials. The Contractor shall NOT use metal drums or single piece plastic drums as channelization devices or sign supports.
4. Drums shall present a profile that is a minimum of 18 inches in width at the 36 inch height when viewed from any direction. The height of drum unit (body installed on base) shall be a minimum of 36 inches and a maximum of 42 inches.
5. The top of the drum shall have a built-in handle for easy pickup and shall be designed to drain water and not collect debris. The handle shall have a minimum of two widely spaced 9/16 inch diameter holes to allow attachment of a warning light, warning reflector unit or approved compliant sign.
6. The exterior of the drum body shall have a minimum of four alternating orange and white retroreflective circumferential stripes not less than 4 inches nor greater than 8 inches in width. Any non-reflectorized space between any two adjacent stripes shall not exceed 2 inches in width.
7. Bases shall have a maximum width of 36 inches, a maximum height of 4 inches, and a minimum of two footholds of sufficient size to allow base to be held down while separating the drum body from the base.
8. Plastic drums shall be constructed of ultra-violet stabilized, orange, high-density polyethylene (HDPE) or other approved material.
9. Drum body shall have a maximum unballasted weight of 11 lbs.
10. Drum and base shall be marked with manufacturer's name and model number.

RETROREFLECTIVE SHEETING

1. The stripes used on drums shall be constructed of sheeting meeting the color and retroreflectivity requirements of Departmental Materials Specification DMS-8300, "Sign Face Materials." Type A reflective sheeting shall be supplied unless otherwise specified in the plans.
2. The sheeting shall be suitable for use on and shall adhere to the drum surface such that, upon vehicular impact, the sheeting shall remain adhered in-place and exhibit no delaminating, cracking, or loss of retroreflectivity other than that loss due to abrasion of the sheeting surface.

BALLAST

1. Unballasted bases shall be large enough to hold up to 50 lbs. of sand. This base, when filled with the ballast material, should weigh between 35 lbs (minimum) and 50 lbs (maximum). The ballast may be sand in one to three sandbags separate from the base, sand in a sand-filled plastic base, or other ballasting devices as approved by the Engineer. Stacking of sandbags will be allowed, however height of sandbags above pavement surface may not exceed 12 inches.
2. Bases with built-in ballast shall weigh between 40 lbs. and 50 lbs. Built-in ballast can be constructed of an integral crumb rubber base or a solid rubber base.
3. Recycled truck tire sidewalls may be used for ballast on drums approved for this type of ballast on the CWZTCD list.
4. The ballast shall not be heavy objects, water, or any material that would become hazardous to motorists, pedestrians, or workers when the drum is struck by a vehicle.
5. When used in areas subject to freezing, drums shall have drainage holes in the bottom to that water will not collect and freeze becoming a hazard when struck by a vehicle.
6. Ballast shall not be placed on top of drums.
7. Adhesives may be used to secure base of drums to pavement.

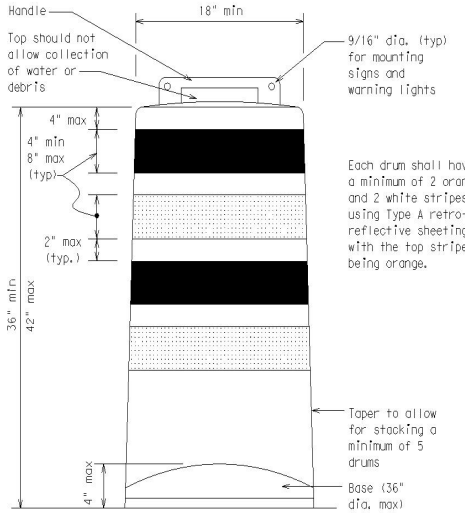

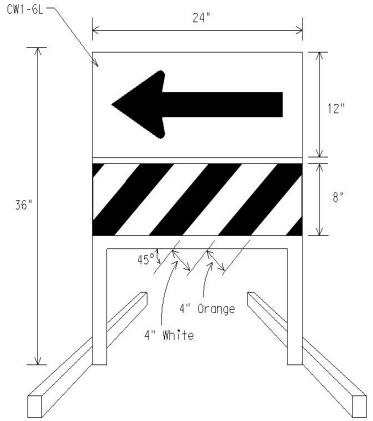

DIRECTION INDICATOR BARRICADE

1. The Direction Indicator Barricade may be used in tapers, transitions, and other areas where specific directional guidance to drivers is necessary.
2. If used, the Direction Indicator Barricade should be used in series to direct the driver through the transition and into the intended travel lane.
3. The Direction Indicator Barricade shall consist of One-Direction Large Arrow (CW1-6) sign in the size shown with a black arrow on a background of Type B_{FL} or Type C_{FL} Orange retroreflective sheeting above a rail with Type A retroreflective sheeting in alternating 4" white and orange stripes sloping downward at an angle of 45 degrees in the direction road users are to pass. Sheeting types shall be as per DMS 8300.
4. Double arrows on the Direction Indicator Barricade will not be allowed.
5. Approved manufacturers are shown on the CWZTCD List. Ballast shall be as approved by the manufacturers instructions.

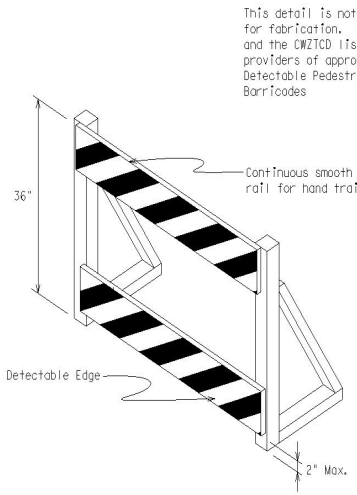

DETECTABLE PEDESTRIAN BARRICADES

1. When existing pedestrian facilities are disrupted, closed, or relocated in a TTC zone, the temporary facilities shall be detectable and include accessibility features consistent with the features present in the existing pedestrian facility.
2. Where pedestrians with visual disabilities normally use the closed sidewalk, a device that is detectable by a person with a visual disability traveling with the aid of a long cane shall be placed across the full width of the closed sidewalk.
3. Detectable pedestrian barricades similar to the one pictured above, longitudinal channelizing devices, some concrete barriers, and wood or chain link fencing with a continuous detectable edging can satisfactorily delineate a pedestrian path.
4. Tape, rope, or plastic chain strung between devices are not detectable, do not comply with the design standards in the "Americans with Disabilities Act Accessibility Guidelines for Buildings and Facilities (ADAAG)" and should not be used as a control for pedestrian movements.
5. Warning lights shall not be attached to detectable pedestrian barricades.
6. Detectable pedestrian barricades may use 8" nominal barricade rails as shown on BC(10) provided that the top rail provides a smooth continuous rail suitable for hand trailing with no splinters, burrs, or sharp edges.

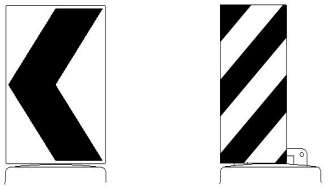

18" x 24" Sign (Maximum Sign Dimension) Chevron CW1-8, Opposing Traffic Lane Divider, Driveway sign D70a, Keep RIght R4 series or other signs as approved by Engineer

12" x 24" Vertical Panel mount with diagonals sloping down towards travel way

Plywood, Aluminum or Metal sign substrates shall NOT be used on plastic drums

SIGNS, CHEVRONS, AND VERTICAL PANELS MOUNTED ON PLASTIC DRUMS

1. Signs used on plastic drums shall be manufactured using substrates listed on the CWZTCD.
2. Chevrons and other work zone signs with an orange background shall be manufactured with Type B_{FL} or Type C_{FL} Orange sheeting meeting the color and retroreflectivity requirements of DMS-8300, "Sign Face Material," unless otherwise specified in the plans.
3. Vertical Panels shall be manufactured with orange and white sheeting meeting the requirements of DMS-8300 Type A Diagonal stripes on Vertical Panels shall slope down toward the intended traveled lane.
4. Other sign messages (text or symbolic) may be used as approved by the Engineer. Sign dimensions shall not exceed 18 inches in width or 24 inches in height, except for the R9 series signs discussed in note 8 below.
5. Signs shall be installed using a 1/2 inch bolt (nominal) and nut, two washers, and one locking washer for each connection.
6. Mounting bolts and nuts shall be fully engaged and adequately torqued. Bolts should not extend more than 1/2 inch beyond nuts.
7. Chevrons may be placed on drums on the outside of curves, on merging tapers or on shifting tapers. When used in these locations they may be placed on every drum or spaced not more than on every third drum. A minimum of three (3) should be used at each location called for in the plans.
8. R9-9, R9-10, R9-11 and R9-11a Sidewalk Closed signs which are 24 inches wide may be mounted on plastic drums, with approval of the Engineer.

Texas Department of Transportation | Traffic Operations Division Standard

BARRICADE AND CONSTRUCTION CHANNELIZING DEVICES

BC(8)-14

FILE: bc-14.dgn	DN: TxDOT	CK: TxDOT	DW: TxDOT	CK: TxDOT
©TxDOT November 2002	CONT	SECT	JOB	HIGHWAY
REVISIONS	.	.	.	.
4-03 7-13	DIST	COUNTY		SHEET NO.
9-07 8-14	.	.		21

102

DATE:
FILE:

PACKET
July 11, 2023

DISCLAIMER:
The use of this standard is governed by the "Texas Engineering Practice Act". No warranty of any kind is made by TxDOT for any purpose whatsoever. TxDOT assumes no responsibility for the conversion of this standard to other formats or for incorrect results or damages resulting from its use.

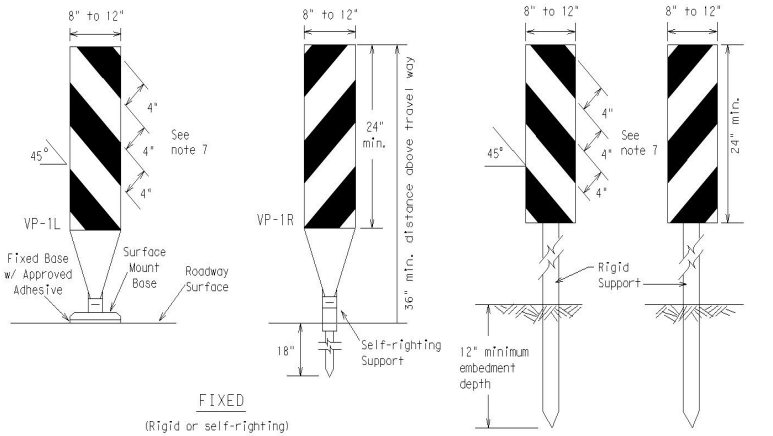

FIXED

(Rigid or self-righting)

DRIVEABLE

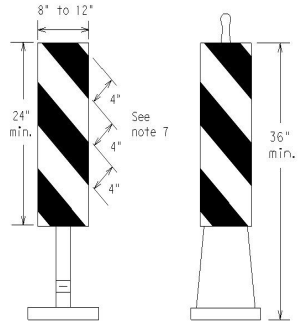

(Rigid or self-righting)

PORTABLE

VERTICAL PANELS (VPs)

1. Vertical Panels (VP's) are normally used to channelize traffic or divide opposing lanes of traffic.
2. VP's may be used in daytime or nighttime situations. They may be used at the edge of shoulder drop-offs and other areas such as lane transitions where positive daytime and nighttime delineation is required. The Engineer/Inspector shall refer to the Roadway Design Manual Appendix B "Treatment of Pavement Drop-offs in Work Zones" for additional guidelines on the use of VP's for drop-offs.
3. VP's should be mounted back to back if used at the edge of cuts adjacent to two-way two lane roadways. Stripes are to be reflective orange and reflective white and should always slope downward toward the travel lane.
4. VP's used on expressways and freeways or other high speed roadways, may have more than 270 square inches of retroreflective area facing traffic.
5. Self-righting supports are available with portable base. See "Compliant Work Zone Traffic Control Devices List" (CWZTCD).
6. Sheeting for the VP's shall be retroreflective Type A conforming to Departmental Material Specification DMS-8300, unless noted otherwise.
7. Where the height of reflective material on the vertical panel is 36 inches or greater, a panel stripe of 6 inches shall be used.

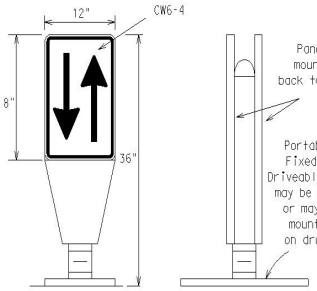

1. Opposing Traffic Lane Dividers (OTLD) are delineation devices designed to convert a normal one-way roadway section to two-way operation. OTLD's are used on temporary centerlines. The upward and downward arrows on the sign's face indicate the direction of traffic on either side of the divider. The base is secured to the pavement with an adhesive or rubber weight to minimize movement caused by a vehicle impact or wind gust.
2. The OTLD may be used in combination with 42" cones or VPs.
3. Spacing between the OTLD shall not exceed 500 feet. 42" cones or VPs placed between the OTLD's should not exceed 100 foot spacing.
4. The OTLD shall be orange with a black non-reflective legend. Sheeting for the OTLD shall be retroreflective Type B_{FL} or Type C_{FL} conforming to Departmental Material Specification DMS-8300, unless noted otherwise. The legend shall meet the requirements of DMS-8300.

OPPOSING TRAFFIC LANE DIVIDERS (OTLD)

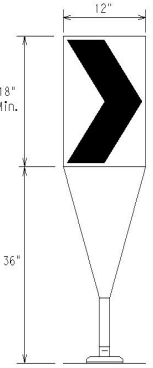

Fixed Base w/ Approved Adhesive (Driveable Base, or Flexible Support can be used)

1. The chevron shall be a vertical rectangle with a minimum size of 12 by 18 inches.
2. Chevrons are intended to give notice of a sharp change of alignment with the direction of travel and provide additional emphasis and guidance for vehicle operators with regard to changes in horizontal alignment of the roadway.
3. Chevrons, when used, shall be erected on the outside of a sharp curve or turn, or on the far side of an intersection. They shall be in line with and at right angles to approaching traffic. Spacing should be such that the motorist always has three in view, until the change in alignment eliminates its need.
4. To be effective, the chevron should be visible for at least 500 feet.
5. Chevrons shall be orange with a black nonreflective legend. Sheeting for the chevron shall be retroreflective Type B_{FL} or Type C_{FL} conforming to Departmental Material Specification DMS-8300, unless noted otherwise. The legend shall meet the requirements of DMS-8300.
6. For Long Term Stationary use on tapers or transitions on freeways and divided highways self-righting chevrons may be used to supplement plastic drums but not to replace plastic drums.

CHEVRONS

GENERAL NOTES

1. Work Zone channelizing devices illustrated on this sheet may be installed in close proximity to traffic and are suitable for use on high or low speed roadways. The Engineer/Inspector shall ensure that spacing and placement is uniform and in accordance with the "Texas Manual on Uniform Traffic Control Devices" (TMUTCD).
2. Channelizing devices shown on this sheet may have a driveable, fixed or portable base. The requirement for self-righting channelizing devices must be specified in the General Notes or other plan sheets.
3. Channelizing devices on self-righting supports should be used in work zone areas where channelizing devices are frequently impacted by errant vehicles or vehicle related wind gusts making alignment of the channelizing devices difficult to maintain. Locations of these devices shall be detailed elsewhere in the plans. These devices shall conform to the TMUTCD and the "Compliant Work Zone Traffic Control Devices List" (CWZTCD).
4. The Contractor shall maintain devices in a clean condition and replace damaged, nonreflective, faded, or broken devices and bases as required by the Engineer/Inspector. The Contractor shall be required to maintain proper device spacing and alignment.
5. Portable bases shall be fabricated from virgin and/or recycled rubber. The portable bases shall weigh a minimum of 30 lbs.
6. Pavement surfaces shall be prepared in a manner that ensures proper bonding between the adhesives, the fixed mount bases and the pavement surface. Adhesives shall be prepared and applied according to the manufacturer's recommendations.
7. The installation and removal of channelizing devices shall not cause detrimental effects to the final pavement surfaces, including pavement surface discoloration or surface integrity. Driveable bases shall not be permitted on final pavement surfaces. The Engineer/Inspector shall approve all application and removal procedures of fixed bases.

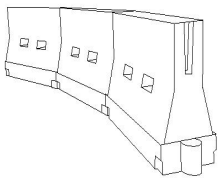

LONGITUDINAL CHANNELIZING DEVICES (LCD)

1. LCDs are crashworthy, lightweight, deformable devices that are highly visible, have good target value and can be connected together. They are not designed to contain or redirect a vehicle on impact.
2. LCDs may be used instead of a line of cones or drums.
3. LCDs shall be placed in accordance to application and installation requirements specific to the device, and used only when shown on the CWZTCD list.
4. LCDs should not be used to provide positive protection for obstacles, pedestrians or workers.
5. LCDs shall be supplemented with retroreflective delineation as required for temporary barriers on BC(7) when placed roughly parallel to the travel lanes.
6. LCDs used as barricades placed perpendicular to traffic should have at least one row of reflective sheeting meeting the requirements for barricade rails as shown on BC(10) placed near the top of the LCD along the full length of the device.

WATER BALLASTED SYSTEMS USED AS BARRIERS

1. Water ballasted systems used as barriers shall not be used solely to channelize road users, but also to protect the work space per the appropriate NCHRP 350 crashworthiness requirements based on roadway speed and barrier application.
2. Water ballasted systems used to channelize vehicular traffic shall be supplemented with retroreflective delineation or channelizing devices to improve daytime/nighttime visibility. They may also be supplemented with pavement markings.
3. Water ballasted systems used as barriers shall be placed in accordance to application and installation requirements specific to the device, and used only when shown on the CWZTCD list.
4. Water ballasted systems used as barriers should not be used for a merging taper except in low speed (less than 45 MPH) urban areas. When used on a taper in a low speed urban area, the taper shall be delineated and the taper length should be designed to optimize road user operations considering the available geometric conditions.
5. When water ballasted systems used as barriers have blunt ends exposed to traffic, they should be attenuated as per manufacturer recommendations or flared to a point outside the clear zone.

If used to channelize pedestrians, longitudinal channelizing devices or water ballasted systems must have a continuous detectable bottom for users of long canes and the top of the unit shall not be less than 32 inches in height.

HOLLOW OR WATER BALLASTED SYSTEMS USED AS LONGITUDINAL CHANNELIZING DEVICES OR BARRIERS

Posted Speed *	Formula	Minimum Desirable Taper Lengths **			Suggested Maximum Spacing of Channelizing Devices	
		10' Offset	11' Offset	12' Offset	On a Taper	On a Tangent
30	$L=\frac{WS^2}{60}$	150'	165'	180'	30'	60'
35		205'	225'	245'	35'	70'
40		265'	295'	320'	40'	80'
45	L=WS	450'	495'	540'	45'	90'
50		500'	550'	600'	50'	100'
55		550'	605'	660'	55'	110'
60		600'	660'	720'	60'	120'
65		650'	715'	780'	65'	130'
70		700'	770'	840'	70'	140'
75		750'	825'	900'	75'	150'
80		800'	880'	960'	80'	160'

** Taper lengths have been rounded off.
L=Length of Taper (FT.) W=Width of Offset (FT.)
S=Posted Speed (MPH)

SUGGESTED MAXIMUM SPACING OF CHANNELIZING DEVICES AND MINIMUM DESIRABLE TAPER LENGTHS

SHEET 9 OF 12

Texas Department of Transportation

Traffic Operations Division Standard

BARRICADE AND CONSTRUCTION CHANNELIZING DEVICES

BC(9)-14

FILE: bc-14.dgn	DN: TxDOT	CK: TxDOT	DW: TxDOT	CK: TxDOT
©TxDOT November 2002	CONT	SECT	JOB	HIGHWAY
REVISIONS	.	.	.	.
9-07 8-14	DIST	COUNTY		SHEET NO.
7-13	.	.	.	22

103

DATE:
FILE:

DISCLAIMER:
The use of this standard is governed by the "Texas Engineering Practice Act". No warranty of any kind is made by TxDOT for any purpose whatsoever. TxDOT assumes no responsibility for the conversion of this standard to other formats or for incorrect results or damages resulting from its use.

DATE:
FILE:

TYPE 3 BARRICADES

1. Refer to the Compliant Work Zone Traffic Control Devices List (CWZTCD) for details of the Type 3 Barricades and a list of all materials used in the construction of Type 3 Barricades.
2. Type 3 Barricades shall be used at each end of construction projects closed to all traffic.
3. Barricades extending across a roadway should have stripes that slope downward in the direction toward which traffic must turn in detouring. When both right and left turns are provided, the chevron striping may slope downward in both directions from the center of the barricade. Where no turns are provided at a closed road striping should slope downward in both directions toward the center of roadway.
4. Striping of rails, for the right side of the roadway, should slope downward to the left. For the left side of the roadway, striping should slope downward to the right.
5. Identification markings may be shown only on the back of the barricade rails. The maximum height of letters and/or company logos used for identification shall be 1".
6. Barricades shall not be placed parallel to traffic unless an adequate clear zone is provided.
7. Warning lights shall NOT be installed on barricades.
8. Where barricades require the use of weights to keep from turning over, the use of sandbags with dry, cohesionless sand is recommended. The sandbags will be tied shut to keep the sand from spilling and to maintain a constant weight. Sand bags shall not be stacked in a manner that covers any portion of a barricade rails reflective sheeting. Rock, concrete, iron, steel or other solid objects will NOT be permitted. Sandbags should weigh a minimum of 35 lbs and a maximum of 50 lbs. Sandbags shall be made of a durable material that tears upon vehicular impact. Rubber (such as tire inner tubes) shall not be used for sandbags. Sandbags shall only be placed along or upon the base supports of the device and shall not be suspended above ground level or hung with rope, wire, chains or other fasteners.
9. Sheeting for barricades shall be retroreflective Type A conforming to Departmental Material Specification DMS-8300 unless otherwise noted.

Barricades shall NOT be used as a sign support.

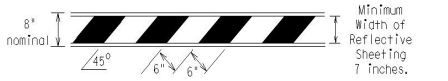

TYPICAL STRIPING DETAIL FOR BARRICADE RAIL

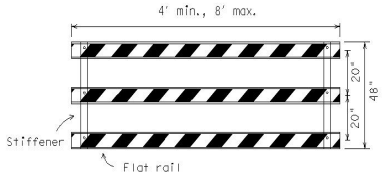

Stiffener may be inside or outside of support, but no more than 2 stiffeners shall be allowed on one barricade.

TYPICAL PANEL DETAIL
FOR SKID OR POST TYPE BARRICADES

Each roadway of a divided highway shall be barricaded in the same manner.

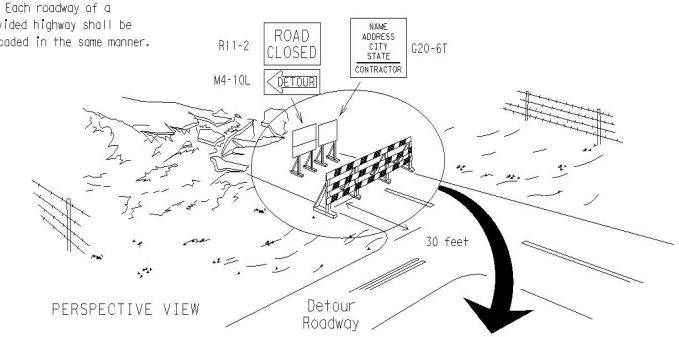

PERSPECTIVE VIEW

The three rails on Type 3 barricades shall be reflectorized orange and reflective white stripes on one side facing one-way traffic and both sides for two-way traffic.
Barricade striping should slant downward in the direction of detour.

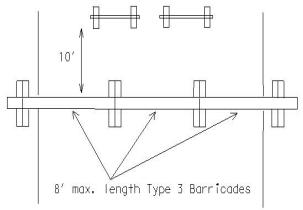

PLAN VIEW

1. Signs should be mounted on independent supports at a 7 foot mounting height in center of roadway. The signs should be a minimum of 10 feet behind Type 3 Barricades.
2. Advance signing shall be as specified elsewhere in the plans.

TYPE 3 BARRICADE (POST AND SKID) TYPICAL APPLICATION

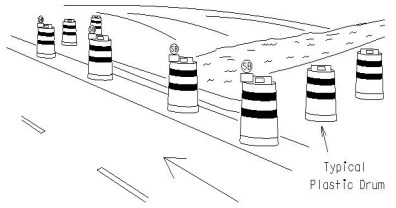

PERSPECTIVE VIEW

1. Where positive redirectional capability is provided, drums may be omitted.
2. Plastic construction fencing may be used with drums for safety as required in the plans.
3. Vertical Panels on flexible support may be substituted for drums when the shoulder width is less than 4 feet.
4. When the shoulder width is greater than 12 feet, steady-burn lights may be omitted if drums are used.
5. Drums must extend the length of the culvert widening.

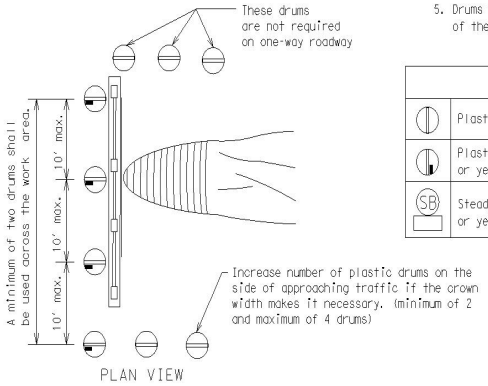

PLAN VIEW

LEGEND	
	Plastic drum
	Plastic drum with steady burn light or yellow warning reflector
SB	Steady burn warning light or yellow warning reflector

CULVERT WIDENING OR OTHER ISOLATED WORK WITHIN THE PROJECT LIMITS

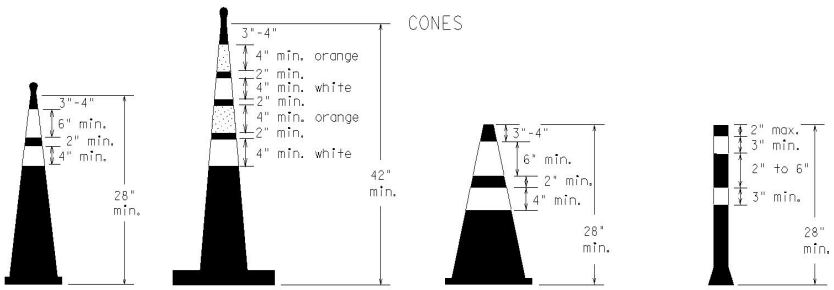

Two-Piece cones | One-Piece cones | Tubular Marker

28" Cones shall have a minimum weight of 9 1/2 lbs.

42" 2-piece cones shall have a minimum weight of 30 lbs. including base.

1. Traffic cones and tubular markers shall be predominantly orange, and meet the height and weight requirements shown above.
2. One-piece cones have the body and base of the cone molded in one consolidated unit. Two-piece cones have a cone shaped body and a separate rubber base, or ballast, that is added to keep the device upright and in place.
3. Two-piece cones may have a handle or loop extending up to 8" above the minimum height shown, in order to aid in retrieving the device.
4. Cones or tubular markers used at night shall have white or white and orange reflective bands as shown above. The reflective bands shall have a smooth, sealed outer surface and meet the requirements of Departmental Material Specification DMS-8300 Type A.
5. 28" cones and tubular markers are generally suitable for short duration and short-term stationary work as defined on BC(4). These should not be used for intermediate-term or long-term stationary work unless personnel is on-site to maintain them in their proper upright position.
6. 42" 2-piece cones, vertical panels or drums are suitable for all work zone durations.
7. Cones or tubular markers used on each project should be of the same size and shape.

THIS DEVICE SHALL NOT BE USED ON PROJECTS LET AFTER MARCH 2014.

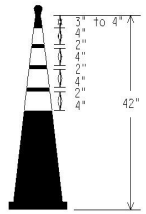

EDGELINE CHANNELIZER

1. This device is intended only for use in place of a vertical panel to channelize traffic by indicating the edge of the travel lane. It is not intended to be used in transitions or tapers.
2. This device shall not be used to separate lanes of traffic (opposing or otherwise) or warn of objects.
3. This device is based on a 42 inch, two-piece cone with an alternate striping pattern: four 4 inch retroreflective bands, with an approximate 2 inch gap between bands. The color of the band should correspond to the color of the edgeline (yellow for left edgeline, white for right edgeline) for which the device is substituted or for which it supplements. The reflectorized bands shall be retroreflective Type A conforming to Departmental Material Specification DMS-8300, unless otherwise noted.
4. The base must weigh a minimum of 30 lbs.

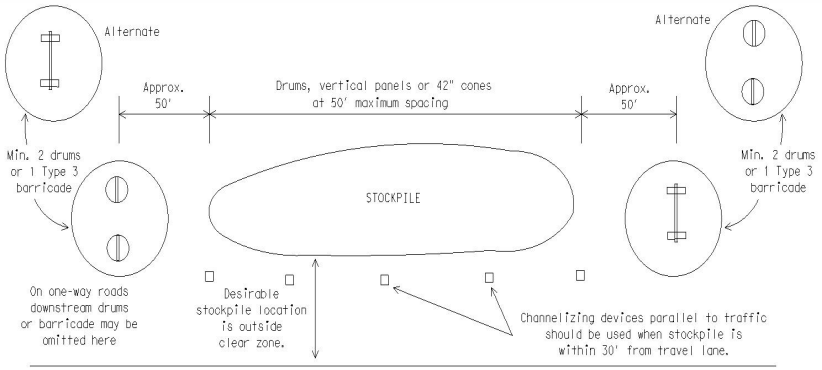

TRAFFIC CONTROL FOR MATERIAL STOCKPILES

PACKET 5.147 July 11, 2023

SHEET 10 OF 12

Texas Department of Transportation | Traffic Operations Division Standard

BARRICADE AND CONSTRUCTION CHANNELIZING DEVICES

BC(10)-14

FILE: bc-14.dgn	DN: TxDOT	CK: TxDOT	DW: TxDOT	CK: TxDOT
©TxDOT November 2002	CONT	SECT	JOB	HIGHWAY
REVISIONS	.	.	.	.
9-07 8-14	DIST	COUNTY		SHEET NO.
7-13	.	.		23

104

DISCLAIMER:
The use of this standard is governed by the "Texas Engineering Practice Act". No warranty of any kind is made by TxDOT for any purpose whatsoever. TxDOT assumes no responsibility for the conversion of this standard to other formats or for incorrect results or damages resulting from its use.

DATE:
FILE:

WORK ZONE PAVEMENT MARKINGS

GENERAL

1. The Contractor shall be responsible for maintaining work zone and existing pavement markings, in accordance with the standard specifications and special provisions, on all roadways open to traffic within the CSJ limits unless otherwise stated in the plans.
2. Color, patterns and dimensions shall be in conformance with the "Texas Manual on Uniform Traffic Control Devices" (TMUTCD).
3. Additional supplemental pavement marking details may be found in the plans or specifications.
4. Pavement markings shall be installed in accordance with the TMUTCD and as shown on the plans.
5. When short term markings are required on the plans, short term markings shall conform with the TMUTCD, the plans and details as shown on the Standard Plan Sheet WZ(STPM).
6. When standard pavement markings are not in place and the roadway is opened to traffic, DO NOT PASS signs shall be erected to mark the beginning of the sections where passing is prohibited and PASS WITH CARE signs at the beginning of sections where passing is permitted.
7. All work zone pavement markings shall be installed in accordance with Item 662, "Work Zone Pavement Markings."

RAISED PAVEMENT MARKERS

1. Raised pavement markers are to be placed according to the patterns on BC(12).
2. All raised pavement markers used for work zone markings shall meet the requirements of Item 672, "RAISED PAVEMENT MARKERS" and Departmental Material Specification DMS-4200 or DMS-4300.

PREFABRICATED PAVEMENT MARKINGS

1. Removable prefabricated pavement markings shall meet the requirements of DMS-8241.
2. Non-removable prefabricated pavement markings (foil back) shall meet the requirements of DMS-8240.

MAINTAINING WORK ZONE PAVEMENT MARKINGS

1. The Contractor will be responsible for maintaining work zone pavement markings within the work limits.
2. Work zone pavement markings shall be inspected in accordance with the frequency and reporting requirements of work zone traffic control device inspections as required by Form 599.
3. The markings should provide a visible reference for a minimum distance of 300 feet during normal daylight hours and 160 feet when illuminated by automobile low-beam headlights at night, unless sight distance is restricted by roadway geometrics.
4. Markings failing to meet this criteria within the first 30 days after placement shall be replaced at the expense of the Contractor as per Specification Item 662.

REMOVAL OF PAVEMENT MARKINGS

1. Pavement markings that are no longer applicable, could create confusion or direct a motorist toward or into the closed portion of the roadway shall be removed or obliterated before the roadway is opened to traffic.
2. The above shall not apply to detours in place for less than three days, where flaggers and/or sufficient channelizing devices are used in lieu of markings to outline the detour route.
3. Pavement markings shall be removed to the fullest extent possible, so as not to leave a discernable marking. This shall be by any method approved by TxDOT Specification Item 677 for "Eliminating Existing Pavement Markings and Markers".
4. The removal of pavement markings may require resurfacing or seal coating portions of the roadway as described in Item 677.
5. Subject to the approval of the Engineer, any method that proves to be successful on a particular type pavement may be used.
6. Blast cleaning may be used but will not be required unless specifically shown in the plans.
7. Over-painting of the markings SHALL NOT BE permitted.
8. Removal of raised pavement markers shall be as directed by the Engineer.
9. Removal of existing pavement markings and markers will be paid for directly in accordance with Item 677, "ELIMINATING EXISTING PAVEMENT MARKINGS AND MARKERS," unless otherwise stated in the plans.
10. Black-out marking tape may be used to cover conflicting existing markings for periods less than two weeks when approved by the Engineer.

Temporary Flexible-Reflective Roadway Marker Tabs

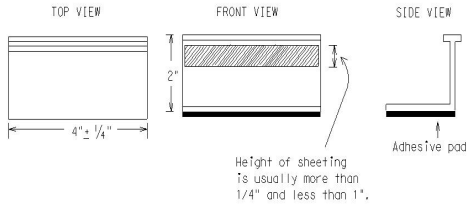

STAPLES OR NAILS SHALL NOT BE USED TO SECURE TEMPORARY FLEXIBLE-REFLECTIVE ROADWAY MARKER TABS TO THE PAVEMENT SURFACE

1. Temporary flexible-reflective roadway marker tabs used as guidemarks shall meet the requirements of DMS-8242.
2. Tabs detailed on this sheet are to be inspected and accepted by the Engineer or designated representative. Sampling and testing is not normally required, however at the option of the Engineer, either "A" or "B" below may be imposed to assure quality before placement on the roadway.
   A. Select five (5) or more tabs at random from each lot or shipment and submit to the Construction Division, Materials and Pavement Section to determine specification compliance.
   B. Select five (5) tabs and perform the following test. Affix five (5) tabs at 24 inch intervals on an asphaltic pavement in a straight line. Using a medium size passenger vehicle or pickup, run over the markers with the front and rear tires at a speed of 35 to 40 miles per hour, four (4) times in each direction. No more than one (1) out of the five (5) reflective surfaces shall be lost or displaced as a result of this test.
3. Small design variances may be noted between tab manufacturers.
4. See Standard Sheet WZ(STPM) for tab placement on new pavements. See Standard Sheet TCP(7-1) for tab placement on seal coat work.

RAISED PAVEMENT MARKERS USED AS GUIDEMARKS

1. Raised pavement markers used as guidemarks shall be from the approved product list, and meet the requirements of DMS-4200.
2. All temporary construction raised pavement markers provided on a project shall be of the same manufacturer.
3. Adhesive for guidemarks shall be bituminous material hot applied or butyl rubber pad for all surfaces, or thermoplastic for concrete surfaces.

Guidemarks shall be designated as:
YELLOW - (two amber reflective surfaces with yellow body).
WHITE - (one silver reflective surface with white body).

DEPARTMENTAL MATERIAL SPECIFICATIONS	
PAVEMENT MARKERS (REFLECTORIZED)	DMS-4200
TRAFFIC BUTTONS	DMS-4300
EPOXY AND ADHESIVES	DMS-6100
BITUMINOUS ADHESIVE FOR PAVEMENT MARKERS	DMS-6130
PERMANENT PREFABRICATED PAVEMENT MARKINGS	DMS-8240
TEMPORARY REMOVABLE, PREFABRICATED PAVEMENT MARKINGS	DMS-8241
TEMPORARY FLEXIBLE, REFLECTIVE ROADWAY MARKER TABS	DMS-8242

A list of prequalified reflective raised pavement markers, non-reflective traffic buttons, roadway marker tabs and other pavement markings can be found at the Material Producer List web address shown on BC(1).

Texas Department of Transportation

Traffic Operations Division Standard

BARRICADE AND CONSTRUCTION PAVEMENT MARKINGS

BC(11)-14

FILE: bc-14.dgn	DN: TxDOT	CK: TxDOT	DW: TxDOT	CK: TxDOT
©TxDOT February 1998	CONT	SECT	JOB	HIGHWAY
REVISIONS	.	.	.	.
2-98 9-07	DIST	COUNTY		SHEET NO.
1-02 7-13	.	.		24
11-02 8-14				

105

DISCLAIMER:
The use of this standard is governed by the "Texas Engineering Practice Act". No warranty of any kind is made by TxDOT for any purpose whatsoever. TxDOT assumes no responsibility for the conversion of this standard to other formats or for incorrect results or damages resulting from its use.

DATE:
FILE:

PAVEMENT MARKING PATTERNS

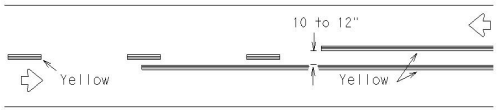

REFLECTORIZED PAVEMENT MARKINGS - PATTERN A

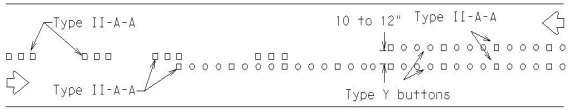

RAISED PAVEMENT MARKERS - PATTERN A

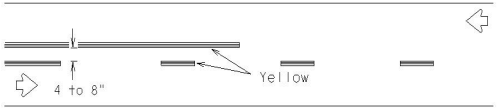

REFLECTORIZED PAVEMENT MARKINGS - PATTERN B

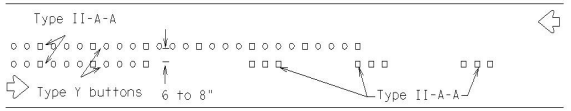

RAISED PAVEMENT MARKERS - PATTERN B

Pattern A is the TXDOT Standard, however Pattern B may be used if approved by the Engineer.
Prefabricated markings may be substituted for reflectorized pavement markings.

CENTER LINE & NO-PASSING ZONE BARRIER LINES FOR TWO-LANE, TWO-WAY HIGHWAYS

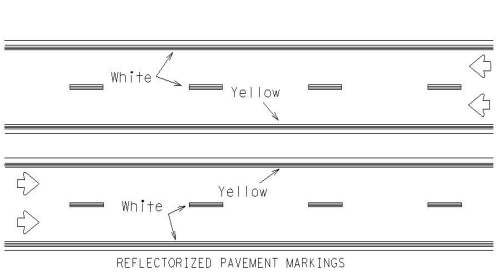

REFLECTORIZED PAVEMENT MARKINGS

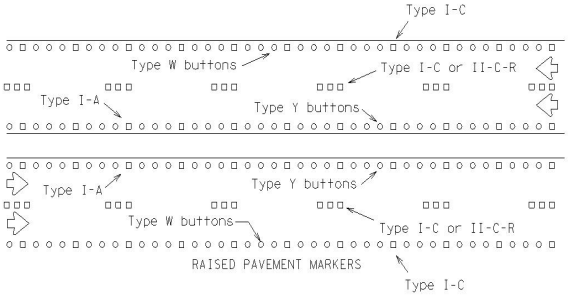

RAISED PAVEMENT MARKERS

Prefabricated markings may be substituted for reflectorized pavement markings.

EDGE & LANE LINES FOR DIVIDED HIGHWAY

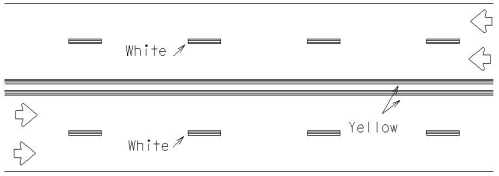

REFLECTORIZED PAVEMENT MARKINGS

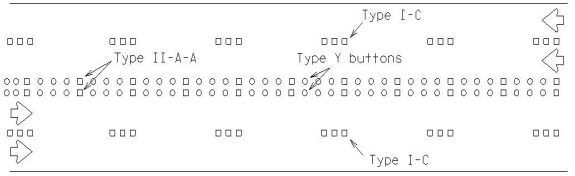

RAISED PAVEMENT MARKERS

Prefabricated markings may be substituted for reflectorized pavement markings.

LANE & CENTER LINES FOR MULTILANE UNDIVIDED HIGHWAYS

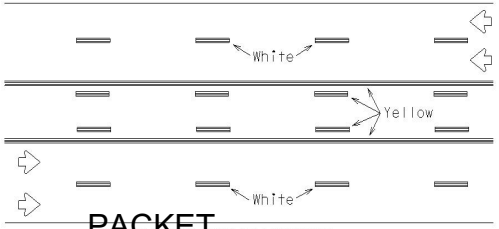

REFLECTORIZED PAVEMENT MARKINGS

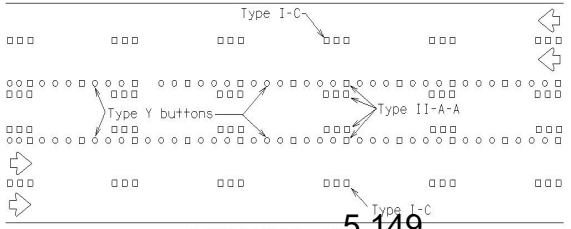

RAISED PAVEMENT MARKERS

Prefabricated markings may be substituted for reflectorized pavement markings.

TWO-WAY LEFT TURN LANE

STANDARD WORK ZONE PAVEMENT MARKINGS DETAILS

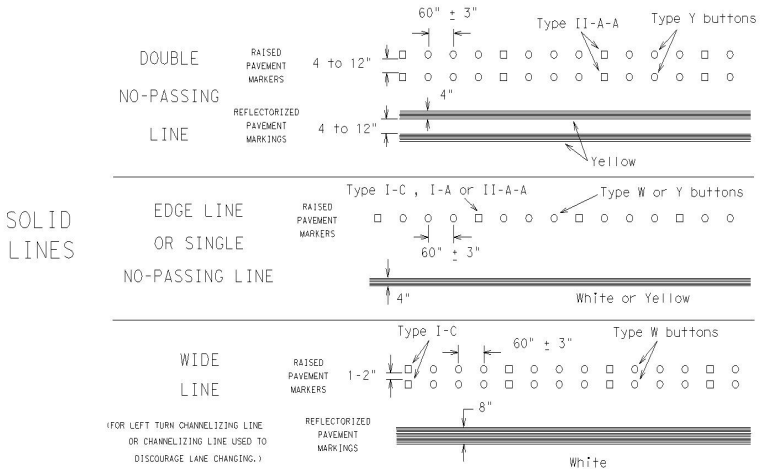

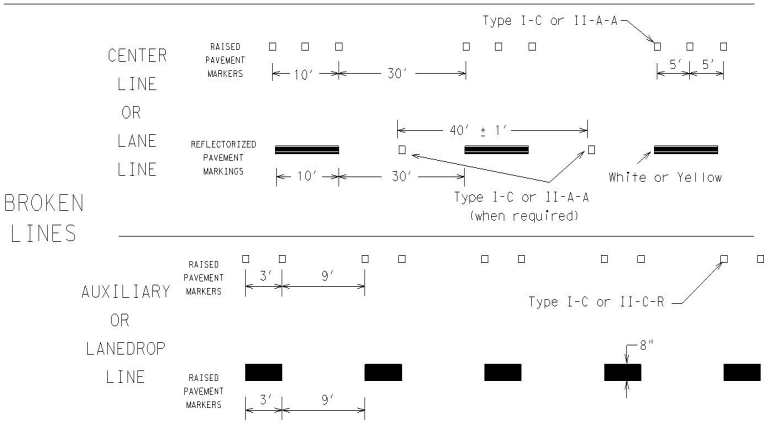

REMOVABLE MARKINGS WITH RAISED PAVEMENT MARKERS

If raised pavement markers are used to supplement REMOVABLE markings, the markers shall be applied to the top of the tape at the approximate mid length of tape used for broken lines or at 20 foot spacing for solid lines. This allows an easier removal of raised pavement markers and tape.

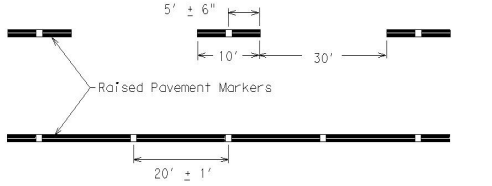

Centerline only - not to be used on edge lines

Raised pavement markers used as standard pavement markings shall be from the approved products list and meet the requirements of Item 672 "RAISED PAVEMENT MARKERS."

SHEET 12 OF 12

Texas Department of Transportation | Traffic Operations Division Standard

BARRICADE AND CONSTRUCTION PAVEMENT MARKING PATTERNS

BC(12)-14

FILE: bc-14.dgn	DN: TxDOT	CK: TxDOT	DW: TxDOT	CK: TxDOT
©TxDOT February 1998	CONT	SECT	JOB	HIGHWAY
REVISIONS	.	.	.	.
1-97 9-07	DIST	COUNTY		SHEET NO.
2-98 7-13	.	.		25
11-02 8-14				

106

DISCLAIMER: The use of this standard is governed by the "Texas Engineering Practice Act". No warranty of any kind is made by TxDOT for any purpose whatsoever. TxDOT assumes no responsibility for the conversion of this standard to other formats or for incorrect results or damages resulting from its use.

DATE:
FILE:

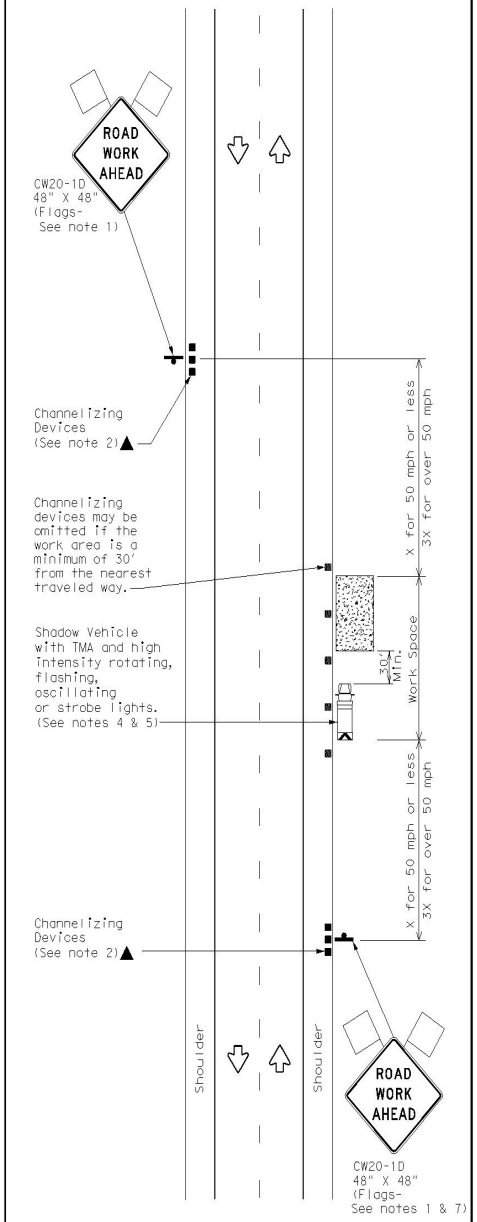

TCP (1-1a)

WORK SPACE NEAR SHOULDER

Conventional Roads

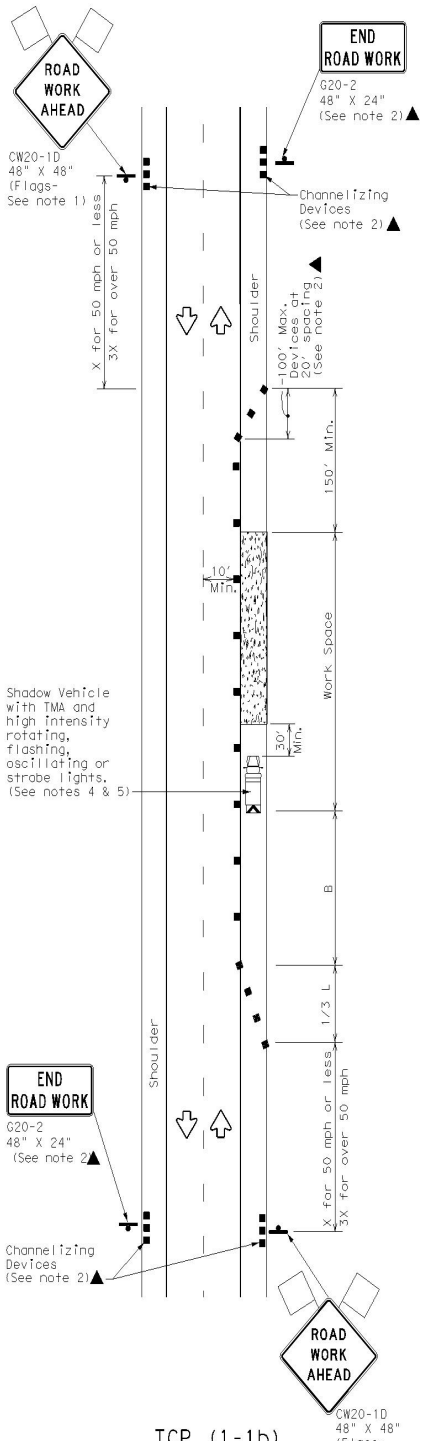

TCP (1-1b)

WORK SPACE ON SHOULDER

Conventional Roads

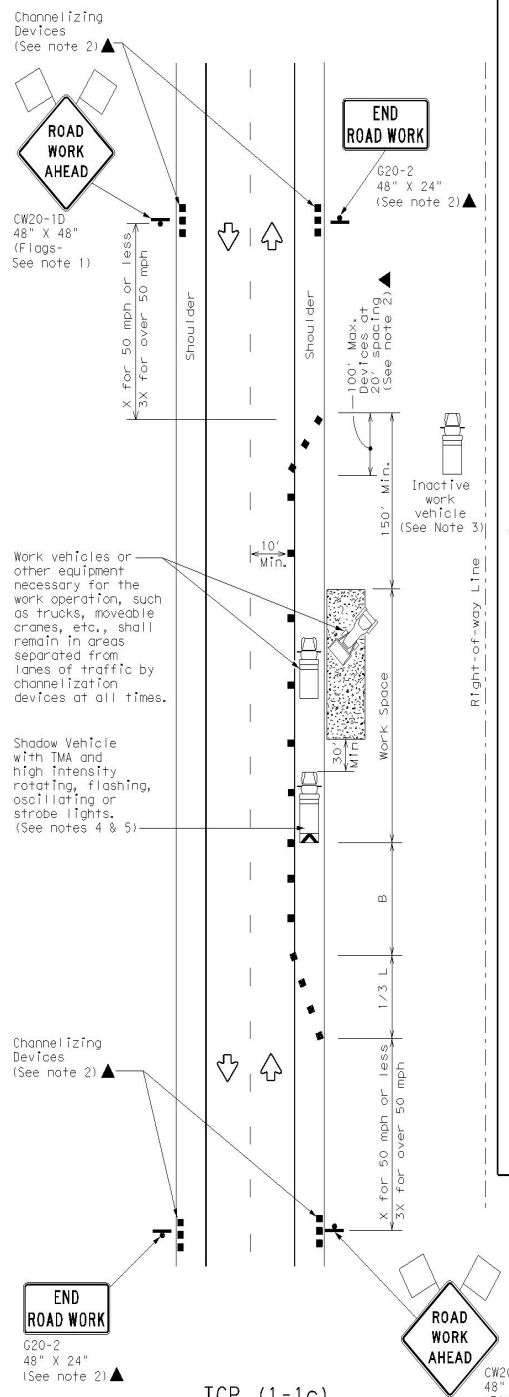

TCP (1-1c)

WORK VEHICLES ON SHOULDER

Conventional Roads

LEGEND			
	Type 3 Barricade		Channelizing Devices
	Heavy Work Vehicle		Truck Mounted Attenuator (TMA)
	Trailer Mounted Flashing Arrow Board		Portable Changeable Message Sign (PCMS)
	Sign		Traffic Flow
	Flag		Flagger

Posted Speed *	Formula	Minimum Desirable Taper Lengths ** 10' Offset	11' Offset	12' Offset	Suggested Maximum Spacing of Channelizing Devices On a Taper	On a Tangent	Minimum Sign Spacing "X" Distance	Suggested Longitudinal Buffer Space "B"
30	$L=\frac{WS^2}{60}$	150'	165'	180'	30'	60'	120'	90'
35		205'	225'	245'	35'	70'	160'	120'
40		265'	295'	320'	40'	80'	240'	155'
45	L=WS	450'	495'	540'	45'	90'	320'	195'
50		500'	550'	600'	50'	100'	400'	240'
55		550'	605'	660'	55'	110'	500'	295'
60		600'	660'	720'	60'	120'	600'	350'
65		650'	715'	780'	65'	130'	700'	410'
70		700'	770'	840'	70'	140'	800'	475'
75		750'	825'	900'	75'	150'	900'	540'

* Conventional Roads Only

** Taper lengths have been rounded off.
L=Length of Taper(FT) W=Width of Offset(FT) S=Posted Speed(MPH)

TYPICAL USAGE				
MOBILE	SHORT DURATION	SHORT TERM STATIONARY	INTERMEDIATE TERM STATIONARY	LONG TERM STATIONARY
	✓	✓		

GENERAL NOTES

1. Flags attached to signs where shown are REQUIRED.
2. All traffic control devices illustrated are REQUIRED, except those denoted with the triangle symbol may be omitted when stated elsewhere in the plans, or for routine maintenance work, when approved by the Engineer.
3. Inactive work vehicles or other equipment should be parked near the right-of-way line and not parked on the paved shoulder.
4. A Shadow Vehicle with a TMA should be used anytime it can be positioned 30 to 100 feet in advance of the area of crew exposure without adversely affecting the performance or quality of the work. If workers are no longer present but road or work conditions require the traffic control to remain in place, Type 3 Barricades or other channelizing devices may be substituted for the Shadow Vehicle and TMA.
5. Additional Shadow Vehicles with TMAs may be positioned off the paved surface, next to those shown in order to protect wider work spaces.
6. See TCP(5-1)for shoulder work on divided highways, expressways and freeways.
7. CW21-5 "SHOULDER WORK" signs may be used in place of CW20-1D "ROAD WORK AHEAD" signs for shoulder work on conventional roadways.

For construction or maintenance contract work, specific project requirements for shadow vehicles can be found in the project GENERAL NOTES for Item 502, Barricades, Signs and Traffic Handling.

Texas Department of Transportation
Traffic Operations Division

TRAFFIC CONTROL PLAN CONVENTIONAL ROAD SHOULDER WORK

TCP(1-1)-12

©TxDOT December 1985

DN: TXDOT	CK: TXDOT	DW: TXDOT	CK: TXDOT
REVISIONS	CONT	SECT	JOB	HIGHWAY
2-94 2-12				
8-95				
1-97	DIST	COUNTY		SHEET NO.
4-98				26

151

DISCLAIMER: The use of this standard is governed by the "Texas Engineering Practice Act". No warranty of any kind is made by TxDOT for any purpose whatsoever. TxDOT assumes no responsibility for the conversion of this standard to other formats or for incorrect results or damages resulting from its use.

DATE:
FILE:

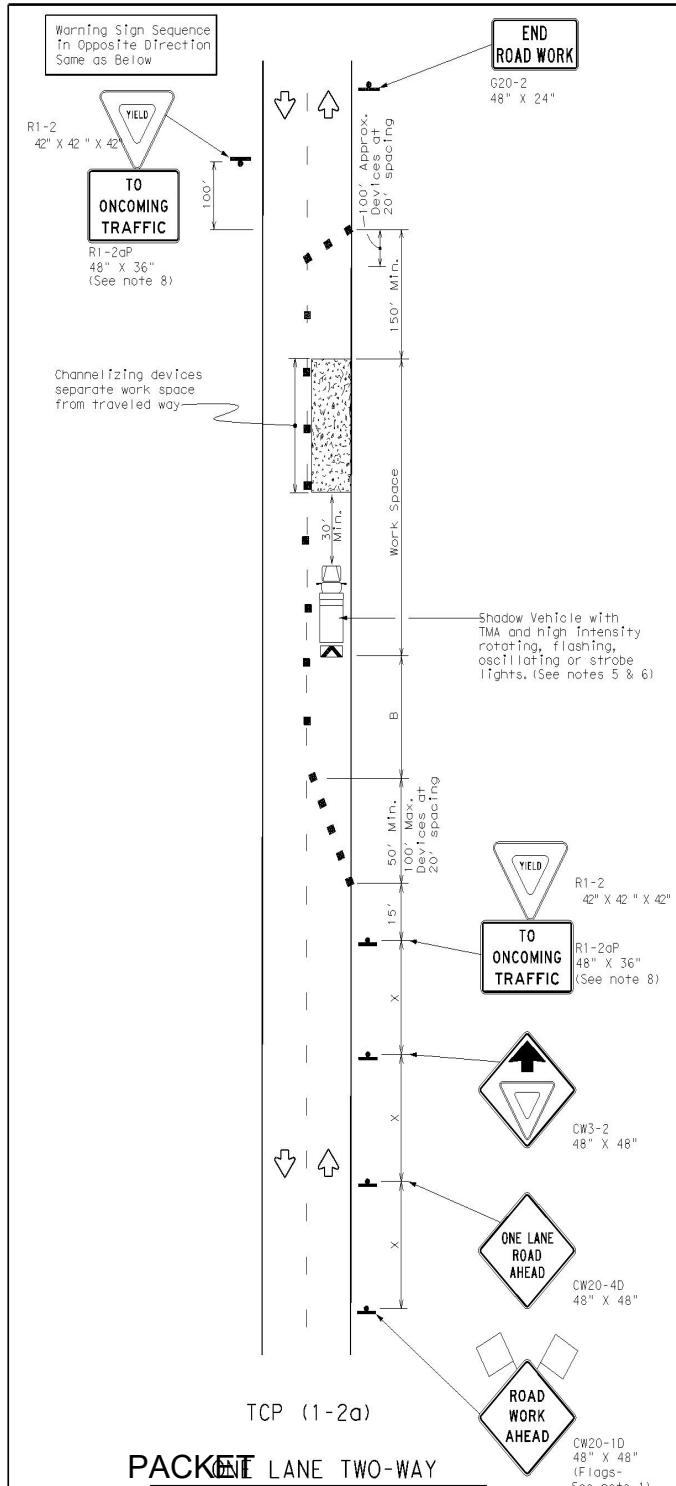

TCP (1-2a)

ONE LANE TWO-WAY CONTROL WITH YIELD SIGNS

(Less than 2000 ADT - See note 7)

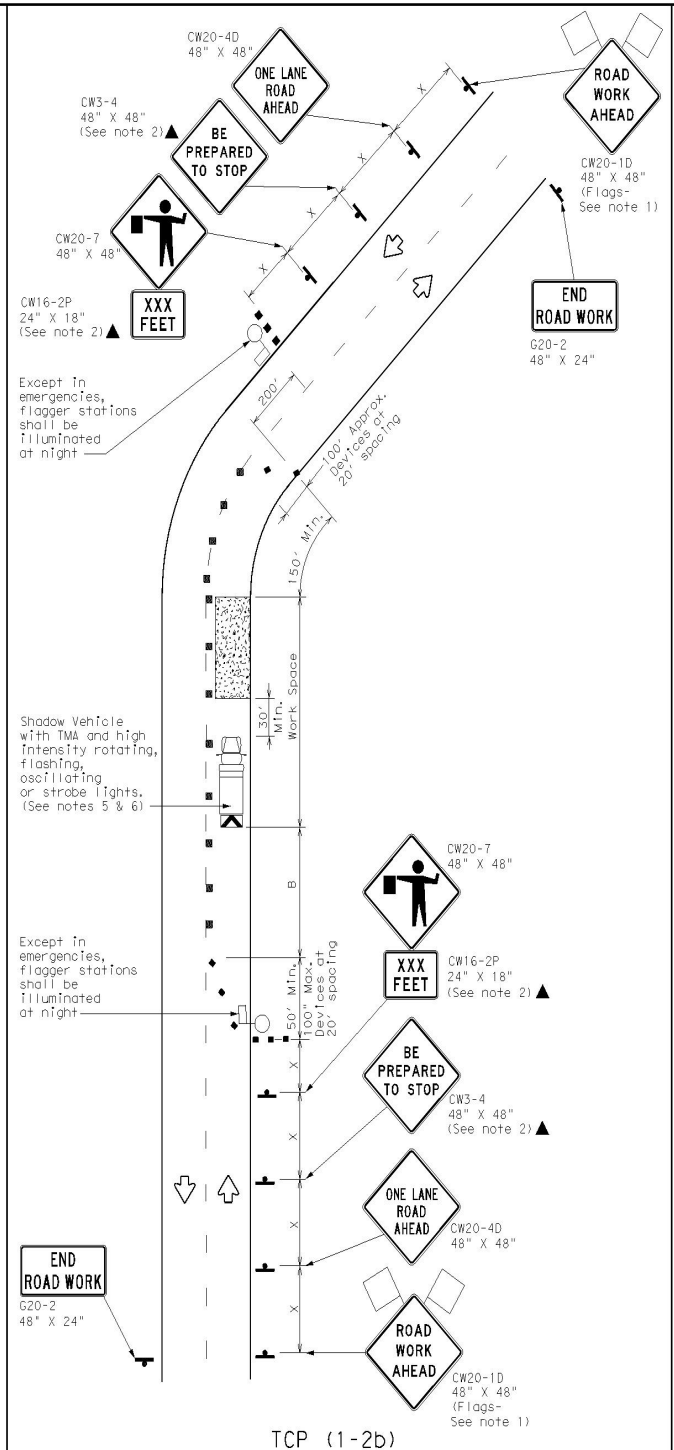

TCP (1-2b)

ONE LANE TWO-WAY CONTROL WITH FLAGGERS

LEGEND			
	Type 3 Barricade		Channelizing Devices
	Heavy Work Vehicle		Truck Mounted Attenuator (TMA)
	Trailer Mounted Flashing Arrow Board	(M)	Portable Changeable Message Sign (PCMS)
	Sign		Traffic Flow
	Flag		Flagger

Posted Speed *	Formula	Minimum Desirable Taper Lengths ** 10' Offset	11' Offset	12' Offset	Suggested Maximum Spacing of Channelizing Devices On a Taper	On a Tangent	Minimum Sign Spacing "X" Distance	Suggested Longitudinal Buffer Space "B"	Stopping Sight Distance
30	$L=\frac{WS^2}{60}$	150'	165'	180'	30'	60'	120'	90'	200'
35		205'	225'	245'	35'	70'	160'	120'	250'
40		265'	295'	320'	40'	80'	240'	155'	305'
45	L=WS	450'	495'	540'	45'	90'	320'	195'	360'
50		500'	550'	600'	50'	100'	400'	240'	425'
55		550'	605'	660'	55'	110'	500'	295'	495'
60		600'	660'	720'	60'	120'	600'	350'	570'
65		650'	715'	780'	65'	130'	700'	410'	645'
70		700'	770'	840'	70'	140'	800'	475'	730'
75		750'	825'	900'	75'	150'	900'	540'	820'

* Conventional Roads Only

** Taper lengths have been rounded off.
L=Length of Taper(FT) W=Width of Offset(FT) S=Posted Speed(MPH)

TYPICAL USAGE				
MOBILE	SHORT DURATION	SHORT TERM STATIONARY	INTERMEDIATE TERM STATIONARY	LONG TERM STATIONARY
	✓	✓		

GENERAL NOTES

1. Flags attached to signs where shown are REQUIRED.
2. All traffic control devices illustrated are REQUIRED, except those denoted with the triangle symbol may be omitted when stated elsewhere in the plans, or for routine maintenance work, when approved by the Engineer.
3. The CW3-4 "BE PREPARED TO STOP" sign may be installed after the CW20-4D "ONE LANE ROAD AHEAD" sign, but proper sign spacing shall be maintained.
4. Sign spacing may be increased or an additional CW20-1D "ROAD WORK AHEAD" sign may be used if advance warning ahead of the flagger or R1-2 "YIELD" sign is less than 1500 feet.
5. A Shadow Vehicle with a TMA should be used anytime it can be positioned 30 to 100 feet in advance of the area of crew exposure without adversely affecting the performance or quality of the work. If workers are no longer present but road or work conditions require the traffic control to remain in place, Type 3 Barricades or other channelizing devices may be substituted for the Shadow Vehicle and TMA.
6. Additional Shadow Vehicles with TMAs may be positioned off the paved surface, next to those shown in order to protect wider work spaces.

TCP (1-2a)

7. R1-2 "YIELD" sign traffic control may be used on projects with approaches that have adequate sight distance. For projects in urban areas, work spaces should be no longer than one half city block. In rural areas on roadways with less than 2000 ADT, work spaces should be no longer than 400 feet.
8. R1-2 "YIELD" sign with R1-2aP "TO ONCOMING TRAFFIC" plaque shall be placed on a support at a 7 foot minimum mounting height.

TCP (1-2b)

9. Flaggers should use two-way radios or other methods of communication to control traffic.
10. Length of work space should be based on the ability of flaggers to communicate.
11. If the work space is located near a horizontal or vertical curve, the buffer distances should be increased in order to maintain adequate stopping sight distance to the flagger and a queue of stopped vehicles (see table above).
12. Channelizing devices on the center-line may be omitted when a pilot car is leading traffic and approved by the Engineer.
13. Flaggers should use 24" STOP/SLOW paddles to control traffic. Flags should be limited to emergency situations.

For construction or maintenance contract work, specific project requirements for shadow vehicles can be found in the project GENERAL NOTES for Item 502, Barricades, Signs and Traffic Handling.

Texas Department of Transportation
Traffic Operations Division

TRAFFIC CONTROL PLAN ONE-LANE TWO-WAY TRAFFIC CONTROL

TCP(1-2)-12

©TxDOT December 1985

DN: TxDOT	CK: TxDOT	DW: TxDOT	CK: TxDOT
CONT	SECT	JOB	HIGHWAY
DIST	COUNTY		SHEET NO.
			27

REVISIONS
4-90 2-12
2-94
1-97
4-98

152

DISCLAIMER: The use of this standard is governed by the "Texas Engineering Practice Act". No warranty of any kind is made by TxDOT for any purpose whatsoever. TxDOT assumes no responsibility for the conversion of this standard to other formats or for incorrect results or damages resulting from its use.

DATE:
FILE:

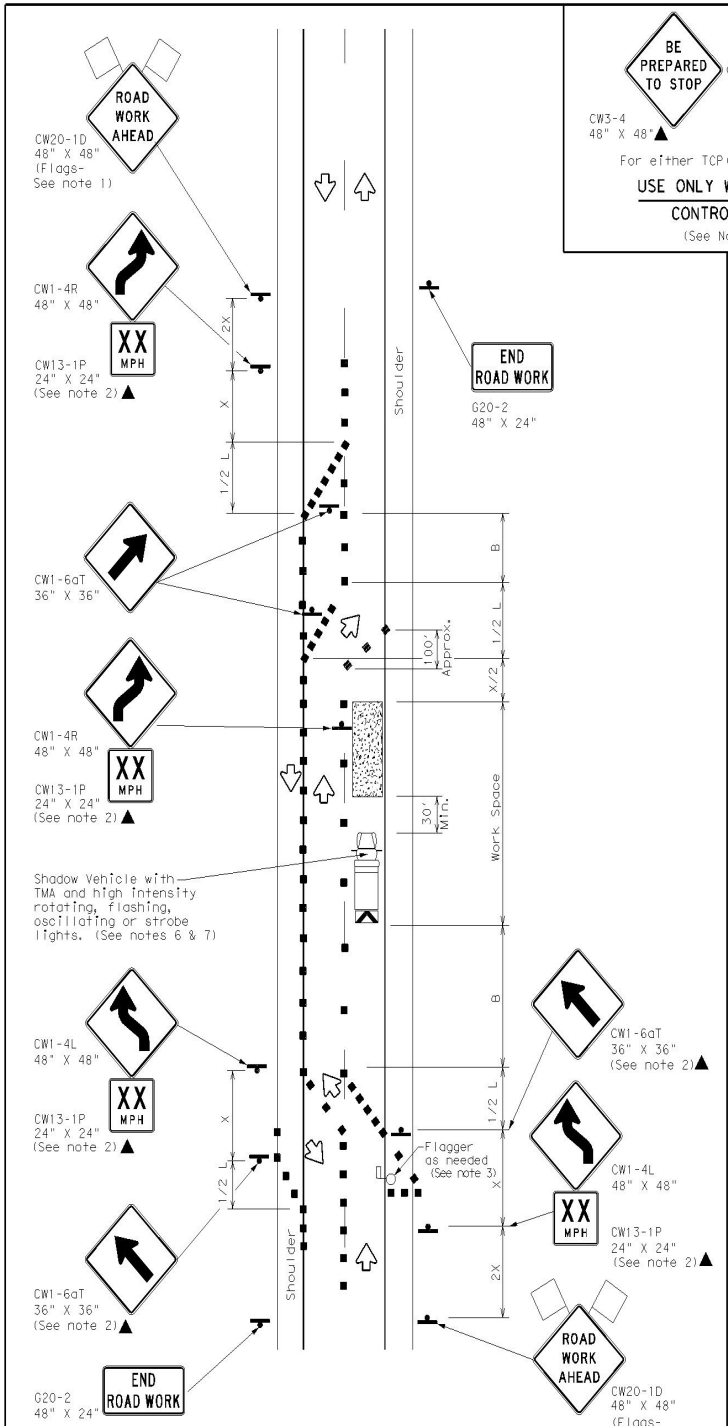

TCP (1-3a)

2-LANE ROADWAY WITH PAVED SHOULDERS

ONE LANE CLOSED

ADEQUATE FIELD OF VIEW

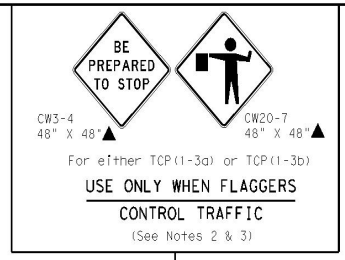

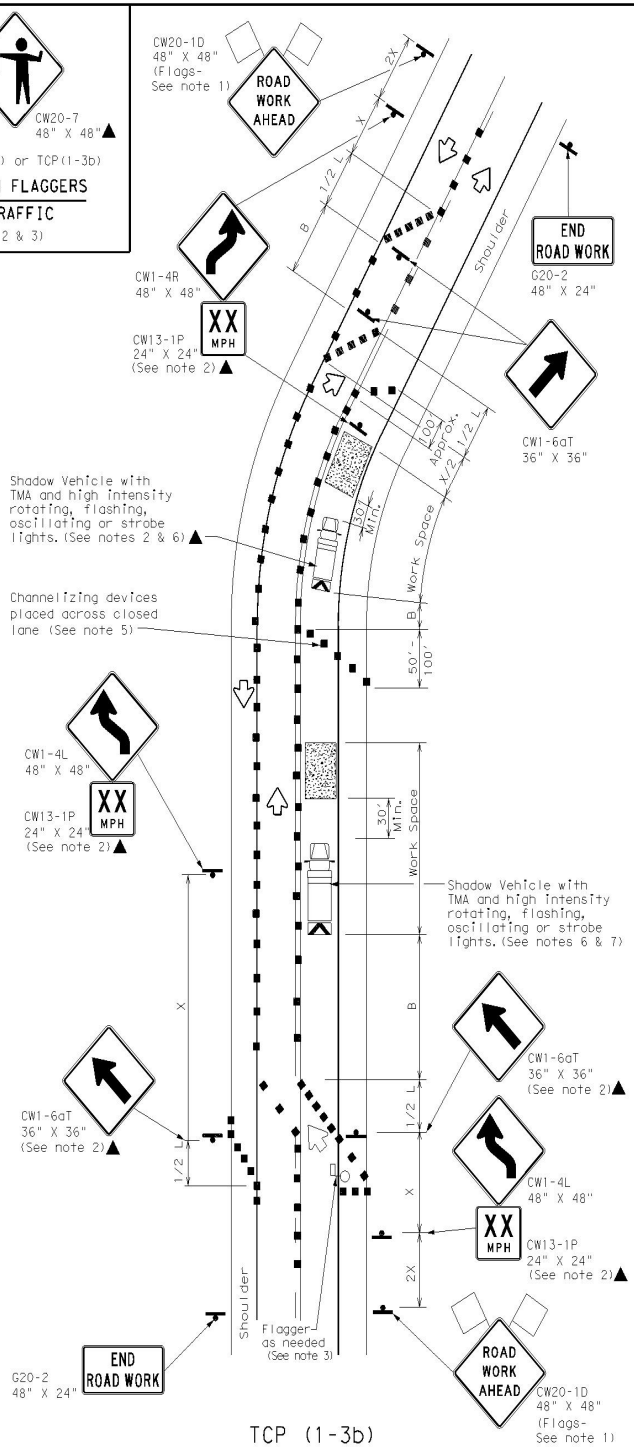

TCP (1-3b)

2-LANE ROADWAY WITH PAVED SHOULDERS

ONE LANE CLOSED

INADEQUATE FIELD OF VIEW

LEGEND			
	Type 3 Barricade		Channelizing Devices
	Heavy Work Vehicle		Truck Mounted Attenuator (TMA)
	Trailer Mounted Flashing Arrow Board	M	Portable Changeable Message Sign (PCMS)
	Sign		Traffic Flow
	Flag		Flagger

Posted Speed *	Formula	Minimum Desirable Taper Lengths ** 10' Offset	11' Offset	12' Offset	Suggested Maximum Spacing of Channelizing Devices On a Taper	On a Tangent	Minimum Sign Spacing "X" Distance	Suggested Longitudinal Buffer Space "B"
30	$L=\frac{WS^2}{60}$	150'	165'	180'	30'	60'	120'	90'
35		205'	225'	245'	35'	70'	160'	120'
40		265'	295'	320'	40'	80'	240'	155'
45	L=WS	450'	495'	540'	45'	90'	320'	195'
50		500'	550'	600'	50'	100'	400'	240'
55		550'	605'	660'	55'	110'	500'	295'
60		600'	660'	720'	60'	120'	600'	350'
65		650'	715'	780'	65'	130'	700'	410'
70		700'	770'	840'	70'	140'	800'	475'
75		750'	825'	900'	75'	150'	900'	540'

* Conventional Roads Only

** Taper lengths have been rounded off.
L=Length of Taper(FT) W=Width of Offset(FT) S=Posted Speed(MPH)

TYPICAL USAGE				
MOBILE	SHORT DURATION	SHORT TERM STATIONARY	INTERMEDIATE TERM STATIONARY	LONG TERM STATIONARY
	✓	✓		

GENERAL NOTES

1. Flags attached to signs where shown are REQUIRED.
2. All traffic control devices illustrated are REQUIRED, except those denoted with the triangle symbol may be omitted when stated elsewhere in the plans, or for routine maintenance work, when approved by the Engineer.
3. Flagger control should NOT be used unless roadway conditions or heavy traffic volume require additional emphasis to safely control traffic. Additional flaggers may be positioned in advance of traffic queues to alert traffic to reduce speed.
4. DO NOT PASS, PASS WITH CARE and construction regulatory speed zone signs may be installed downstream of the ROAD WORK AHEAD signs.
5. When the work zone is made up of several work spaces, channelizing devices should be placed laterally across the closed lane to re-emphasize closure. Laterally placed channelizing devices should be repeated every 500 to 1000 feet in urban areas and every 1/4 to 1/2 mile in rural areas.
6. A Shadow Vehicle with a TMA should be used anytime it can be positioned 30 to 100 feet in advance of the area of crew exposure without adversely affecting the performance or quality of the work. If workers are no longer present but road or work conditions require the traffic control to remain in place, Type 3 Barricades or other channelizing devices may be substituted for the Shadow Vehicle and TMA.
7. Additional Shadow Vehicles with TMAs may be positioned off the paved surface, next to those shown in order to protect wider work spaces.
8. Where traffic is directed over a yellow centerline, channelizing devices which separate two-way traffic should be spaced on tapers at 20', or 15' if posted speed are 35 mph or slower, and for tangent sections, at 1/2S where S is the speed in mph. This tighter device spacing is intended for the area of conflicting markings not the entire work zone.

For construction or maintenance contract work, specific project requirements for shadow vehicles can be found in the project GENERAL NOTES for Item 502, Barricades, Signs and Traffic Handling.

Texas Department of Transportation
Traffic Operations Division

TRAFFIC CONTROL PLAN TRAFFIC SHIFTS ON TWO LANE ROADS

TCP(1-3)-12

© TxDOT December 1985

DN: TXDOT	CK: TXDOT	DW: TXDOT	CK: TXDOT
REVISIONS	CONT	SECT	JOB	HIGHWAY
2-94 2-12	.	.	.	.
8-95				
1-97	DIST	COUNTY		SHEET NO.
4-98	.	.		28

153

PACKET 5.152 July 11, 2023

DISCLAIMER: The use of this standard is governed by the "Texas Engineering Practice Act". No warranty of any kind is made by TxDOT for any purpose whatsoever. TxDOT assumes no responsibility for the conversion of this standard to other formats or for incorrect results or damages resulting from its use.

DATE:
FILE:

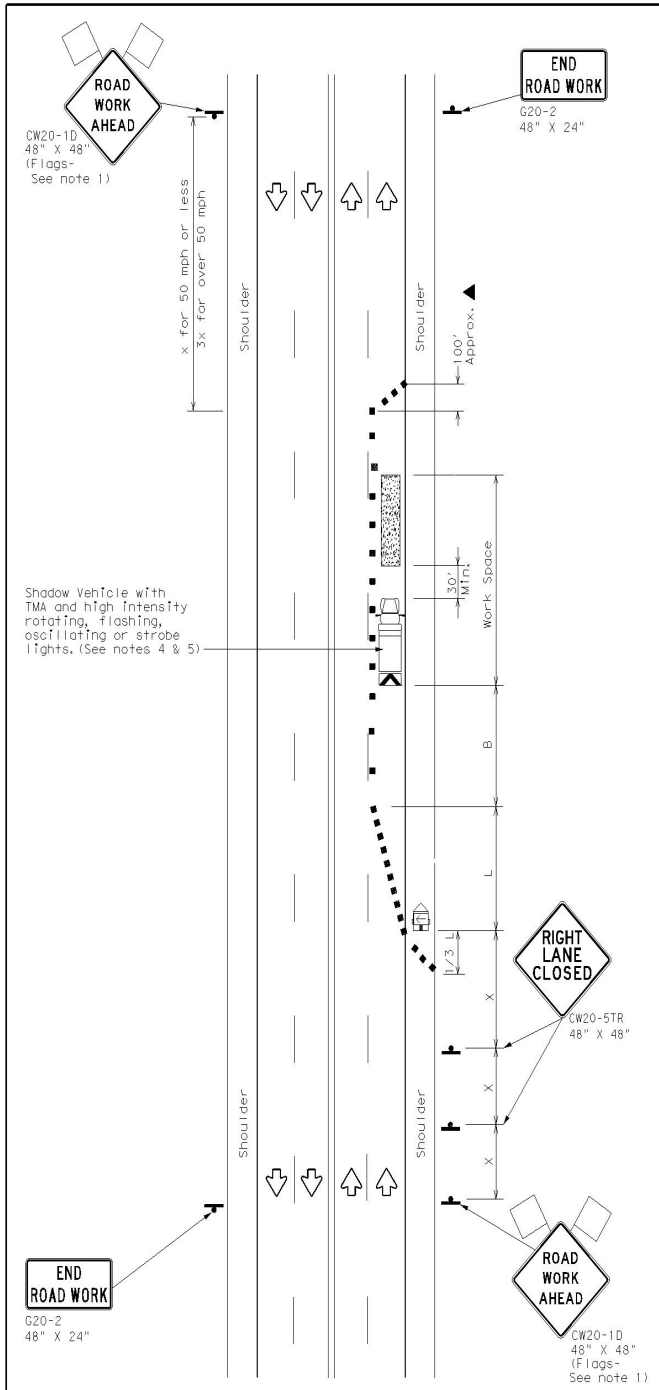

TCP (1-4a)

PACKET

ONE LANE CLOSED

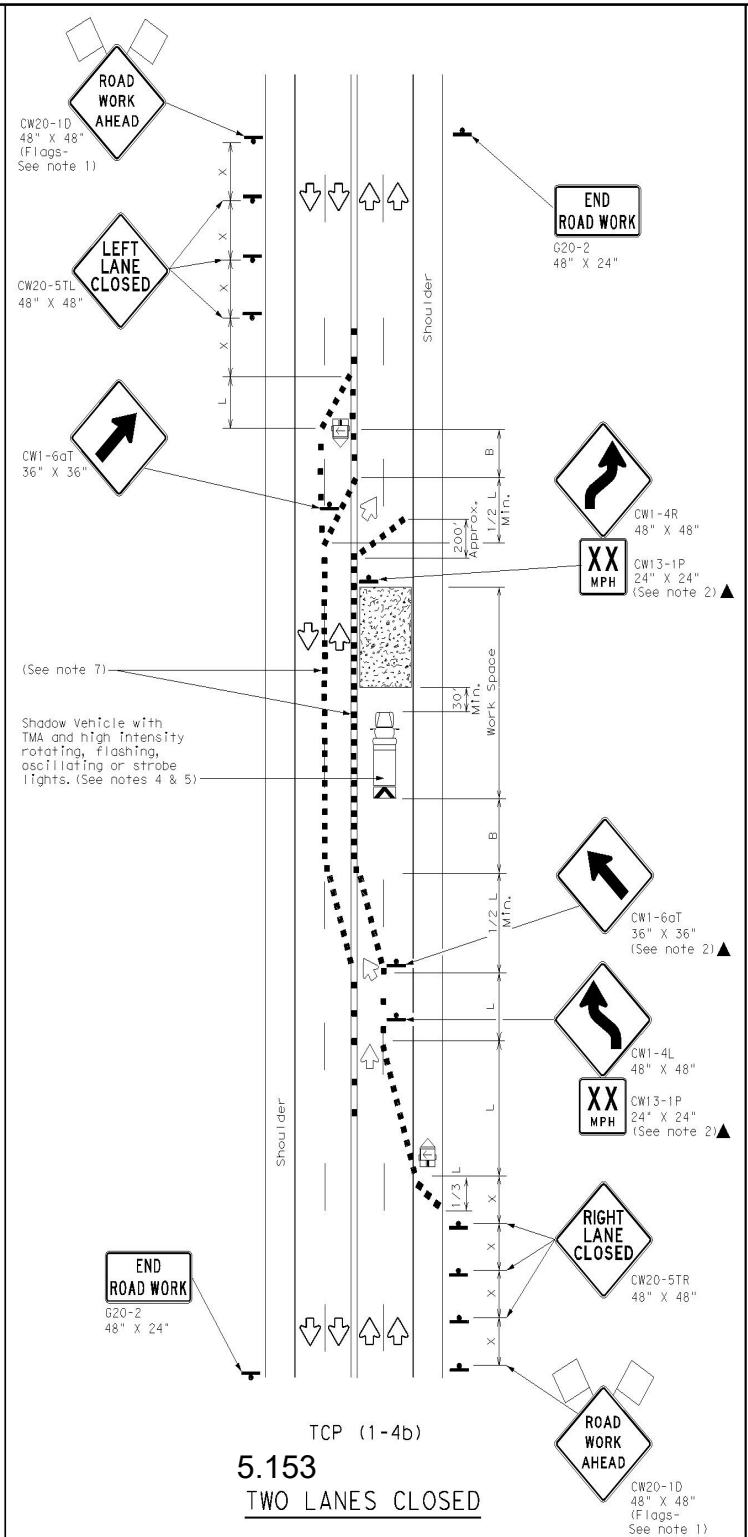

TCP (1-4b)

5.153

TWO LANES CLOSED

LEGEND			
	Type 3 Barricade		Channelizing Devices
	Heavy Work Vehicle		Truck Mounted Attenuator (TMA)
	Trailer Mounted Flashing Arrow Board	M	Portable Changeable Message Sign (PCMS)
	Sign		Traffic Flow
	Flag		Flagger

Posted Speed *	Formula	Minimum Desirable Taper Lengths ** 10' Offset	11' Offset	12' Offset	Suggested Maximum Spacing of Channelizing Devices On a Taper	On a Tangent	Minimum Sign Spacing "X" Distance	Suggested Longitudinal Buffer Space "B"
30	$L=\frac{WS^2}{60}$	150'	165'	180'	30'	60'	120'	90'
35		205'	225'	245'	35'	70'	160'	120'
40		265'	295'	320'	40'	80'	240'	155'
45	L=WS	450'	495'	540'	45'	90'	320'	195'
50		500'	550'	600'	50'	100'	400'	240'
55		550'	605'	660'	55'	110'	500'	295'
60		600'	660'	720'	60'	120'	600'	350'
65		650'	715'	780'	65'	130'	700'	410'
70		700'	770'	840'	70'	140'	800'	475'
75		750'	825'	900'	75'	150'	900'	540'

* Conventional Roads Only
** Taper lengths have been rounded off.
L=Length of Taper(FT) W=Width of Offset(FT) S=Posted Speed(MPH)

TYPICAL USAGE				
MOBILE	SHORT DURATION	SHORT TERM STATIONARY	INTERMEDIATE TERM STATIONARY	LONG TERM STATIONARY
	✓	✓		

GENERAL NOTES

1. Flags attached to signs where shown are REQUIRED.
2. All traffic control devices illustrated are REQUIRED, except those denoted with the triangle symbol may be omitted when stated elsewhere in the plans, or for routine maintenance work, when approved by the Engineer.
3. The CW20-1D "ROAD WORK AHEAD" sign may be repeated if the visibility of the work zone is less than 1500 feet.
4. A Shadow Vehicle with a TMA should be used anytime it can be positioned 30 to 100 feet in advance of the area of crew exposure without adversely affecting the performance or quality of the work. If workers are no longer present but road or work conditions require the traffic control to remain in place, Type 3 Barricades or other channelizing devices may be substituted for the Shadow Vehicle and TMA.
5. Additional Shadow Vehicles with TMAs may be positioned off the paved surface, next to those shown in order to protect wider work spaces.

TCP (1-4a)

6. If this TCP is used for a left lane closure , CW20-5TL "LEFT LANE CLOSED" signs shall be used and channelizing devices shall be placed on the centerline where needed to protect the work space from opposing traffic with the arrow panel placed in the closed lane near the end of the merging taper.

TCP (1-4b)

7. Where traffic is directed over a yellow centerline, channelizing devices which separate two-way traffic should be spaced on tapers at 20' or 15' if posted speeds are 35 mph or slower, and for tangent sections, at 1/2S where S is the speed in mph. This tighter device spacing is intended for the areas of conflicting markings, not the entire work zone.

For construction or maintenance contract work, specific project requirements for shadow vehicles can be found in the project GENERAL NOTES for Item 502, Barricades, Signs and Traffic Handling.

Texas Department of Transportation
Traffic Operations Division

TRAFFIC CONTROL PLAN LANE CLOSURES ON MULTILANE CONVENTIONAL ROADS

TCP(1-4)-12

July 11, 2023

© TxDOT December 1985

DN: TxDOT	CK: TxDOT	DW: TxDOT	CK: TxDOT
REVISIONS	CONT	SECT	JOB	HIGHWAY
2-94 2-12				
8-95				
1-97	DIST	COUNTY		SHEET NO.
4-98				29
154				

DISCLAIMER:
The use of this standard is governed by the "Texas Engineering Practice Act". No warranty of any kind is made by TxDOT for any purpose whatsoever. TxDOT assumes no responsibility for the conversion of this standard to other formats or for incorrect results or damages resulting from its use.

DATE:
FILE:

TYPE 1

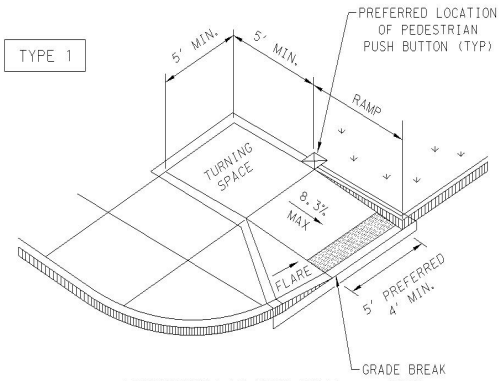

PERPENDICULAR CURB RAMP

TYPE 2

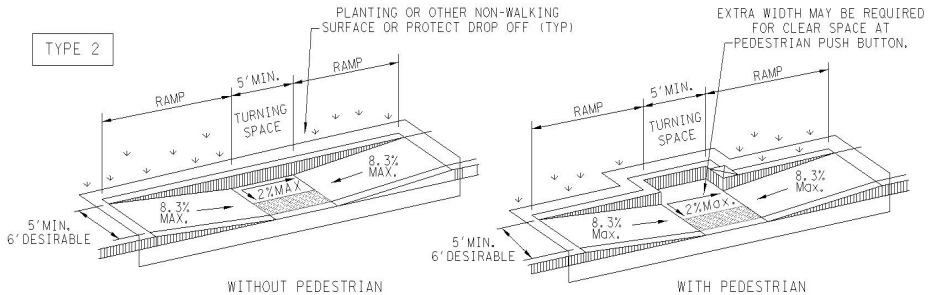

WITHOUT PEDESTRIAN PUSH BUTTON

WITH PEDESTRIAN PUSH BUTTON

PARALLEL CURB RAMP

TYPE 3

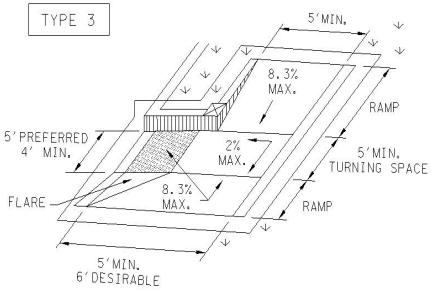

TYPE 6

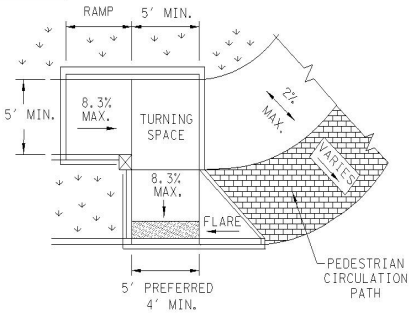

COMBINATION CURB RAMPS

TYPE 20

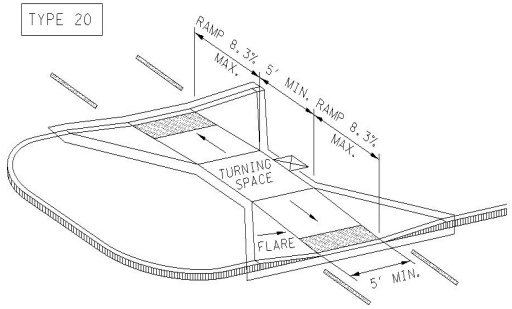

CURB RAMPS AT MEDIAN ISLANDS

TYPE 7

(SIDEWALK SET BACK FROM CURB)

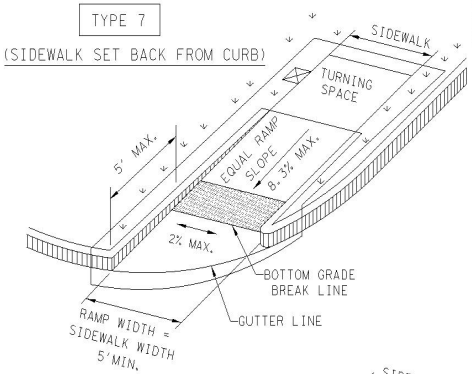

CROSS SLOPE NOT TO EXCEED 2% ON ANY PORTION OF RAMP, TURNING SPACE OR TRANSITION TO STREET.

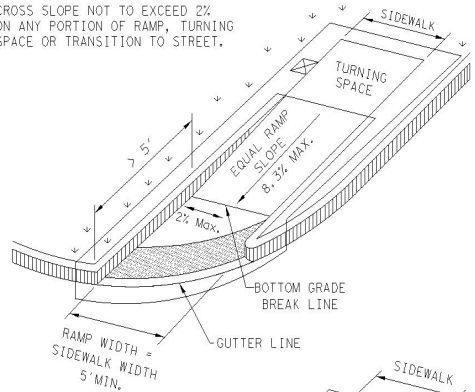

TYPE 10

(SIDEWALK ADJACENT TO CURB)

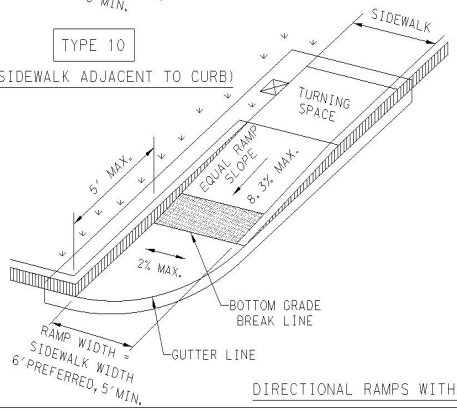

CROSS SLOPE NOT TO EXCEED 2% ON ANY PORTION OF RAMP, TURNING SPACE OR TRANSITION TO STREET.

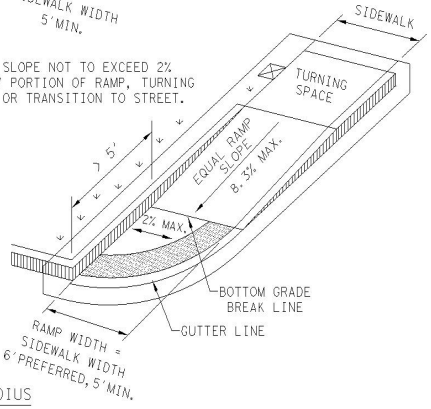

DIRECTIONAL RAMPS WITHIN RADIUS

TYPE 5

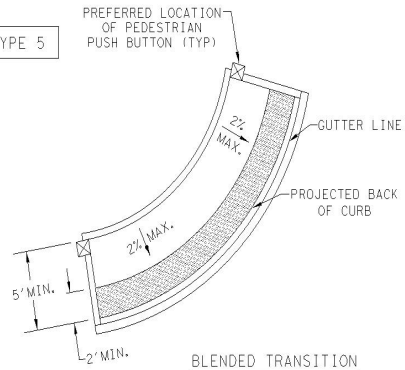

BLENDED TRANSITION

(FLUSH LANDING)

TYPE 21

INSTALL DETECTABLE WARNING SURFACE AT EACH END OF THE CUT-THROUGH RAMP WITH A MINIMUM 2' USUAL SIDEWALK SURFACE BETWEEN. IF MEDIAN IS LESS THAN 6' WIDE, ELIMINATE DETECTABLE WARNING SURFACES.

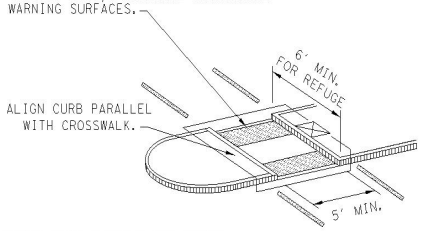

NOTE: CURB DETAILS ARE SHOWN ELSEWHERE IN THE PLANS.

TYPE 22

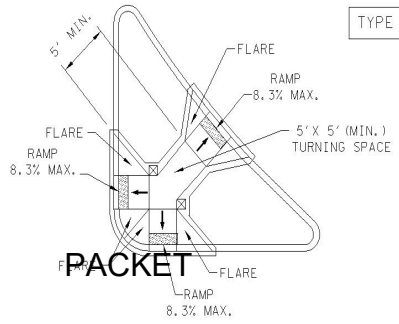

COMBINATION ISLAND RAMPS

BOTTOM GRADE BREAK OF CURB RAMP WILL NORMALLY BE AT GUTTER LINE. SURFACE SLOPES AT GRADE BREAKS SHALL BE FLUSH.

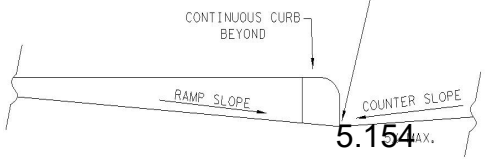

TYPICAL SECTION OF PERPENDICULAR CURB RAMP AT CONNECTION TO ROADWAY

NOTES / LEGEND:

SEE GENERAL NOTES ON SHEET 2 OF 4 FOR MORE INFORMATION.

DENOTES PLANTING OR NON-WALKING SURFACE NOT PART OF PEDESTRIAN CIRCULATION PATH.

DETECTABLE WARNING SURFACE

DENOTES PREFERRED LOCATION OF PEDESTRIAN PUSH BUTTON IF APPLICABLE.

GUTTER LINE

GRADE BREAK

RAMP LIMITS OF PAYMENT

SHEET 1 OF 4

Texas Department of Transportation

Design Division Standard

PEDESTRIAN FACILITIES CURB RAMPS

PED-18

FILE: pedre	DN: TxDOT	DW: VP	CK: KM	CK: PK & JC
© TxDOT: MARCH, 2002	CONT	SECT	JOB	HIGHWAY
REVISIONS				
REVISED 08,2005 REVISED 06,2012 REVISED 01,2018	DIST	COUNTY		SHEET NO.
				30

PACKET 5.154 July 11, 2023

DISCLAIMER:
The use of this standard is governed by the "Texas Engineering Practice Act". No warranty of any kind is made by TxDOT for any purpose whatsoever. TxDOT assumes no responsibility for the conversion of this standard to other formats or for incorrect results or damages resulting from its use.

DATE:
FILE:

GENERAL NOTES

CURB RAMPS

1. Install a curb ramp or blended transition at each pedestrian street crossing.
2. All slopes shown are maximum allowable. Cross slopes of 1.5% and lesser running should be used. Adjust curb ramp length or grade of approach sidewalks as directed.
3. Maximum allowable cross slope on sidewalk and curb ramp surfaces is 2%.
4. The minimum sidewalk width is 5'. Where the sidewalk is adjacent to the back of curb, a 6' sidewalk width is desirable. Where a 5' sidewalk cannot be provided due to site constraints, sidewalk width may be reduced to 4' for short distances. 5'x 5' passing areas at intervals not to exceed 200' are required.
5. Turning Spaces shall be 5'x 5' minimum. Cross slope shall be maximum 2%.
6. Clear space at the bottom of curb ramps shall be a minimum of 4'x 4' wholly contained within the crosswalk and wholly outside the parallel vehicular travel path.
7. Provide flared sides where the pedestrian circulation path crosses the curb ramp. Flared sides shall be sloped at 10% maximum, measured parallel to the curb. Returned curbs may be used only where pedestrians would not normally walk across the ramp, either because the adjacent surface is planted, substantially obstructed, or otherwise protected.
8. Additional information on curb ramp location, design, light reflective value and texture may be found in the latest draft of the Proposed Guidelines for Pedestrian Facilities in the Public Right of Way (PROWAG) as published by the U.S. Architectural and Transportation Barriers Compliance Board (Access Board).
9. To serve as a pedestrian refuge area, the median should be a minimum of 6' wide, measured from back of curbs. Medians should be designed to provide accessible passage over or through them.
10. Small channelization islands, which do not provide a minimum 5'x 5' landing at the top of curb ramps, shall be cut through level with the surface of the street.
11. Crosswalk dimensions, crosswalk markings and stop bar locations shall be as shown elsewhere in the plans. At intersections where crosswalk markings are not required, curb ramps shall align with theoretical crosswalks unless otherwise directed.
12. Provide curb ramps to connect the pedestrian access route at each pedestrian street crossing. Handrails are not required on curb ramps.
13. Curb ramps and landings shall be constructed and paid for in accordance with Item 531 "Sidewalks".
14. Place concrete at a minimum depth of 5" for ramps, flares and landings, unless otherwise directed.
15. Furnish and install No. 3 reinforcing steel bars at 18" o.c. both ways, unless otherwise directed.
16. Provide a smooth transition where the curb ramps connect to the street.
17. Curbs shown on sheet 1 within the limits of payment are considered part of the curb ramp for payment, whether it is concrete curb, gutter, or combined curb and gutter.
18. Existing features that comply with applicalble standards may remain in place unless otherwise shown on the plans.

DETECTABLE WARNING MATERIAL

19. Curb ramps must contain a detectable warning surface that consists of raised truncated domes complying with PROWAG. The surface must contrast visually with adjoining surfaces, including side flares. Furnish and install an approved cast-in-place dark brown or dark red detectable warning surface material adjacent to uncolored concrete, unless specified elsewhere in the plans.
20. Detectable Warning Materials must meet TxDOT Departmental Materials Specification DMS 4350 and be listed on the Material Producer List. Install products in accordance with manufacturer's specifications.
21. Detectable warning surfaces must be firm, stable and slip resistant.
22. Detectable warning surfaces shall be a minimum of 24 inches in depth in the direction of pedestrian travel, and extend the full width of the curb ramp or landing where the pedestrian access route enters the street.
23. Detectable warning surfaces shall be located so that the edge nearest the curb line is at the back of curb and neither end of that edge is greater than 5 feet from the back of curb. Detectable warning surfaces may be curved along the corner radius.
24. Shaded areas on Sheet 4 of 4 indicate the approximate location for the detectable warning surface for each curb ramp type.

DETECTABLE WARNING PAVERS (IF USED)

25. Furnish detectable warning paver units meeting all requirements of ASTM C-936, C-33. Lay in a two by two unit basket weave pattern or as directed.
26. Lay full-size units first followed by closure units consisting of at least 25 percent (25%) of a full unit. Cut detectable warning paver units using a power saw.

SIDEWALKS

27. Provide clear ground space at operable parts, including pedestrian push buttons. Operable parts shall be placed within unobstructed reach range specified in PROWAG section R406.
28. Place traffic signal or illumination poles, ground boxes, controller boxes, signs, drainage facilities and other items so as not to obstruct the pedestrian access route or clear ground space.
29. Street grades and cross slopes shall be as shown elsewhere in the plans.
30. Changes in level greater than 1/4 inch are not permitted.
31. The least possible grade should be used to maximize accessibility. The running slope of sidewalks and crosswalks within the public right of way may follow the grade of the parallel roadway. Where a continuous grade greater than five percent (5%) must be provided, handrails may be desirable to improve accessibility. Handrails may also be needed to protect pedestrians from potentially hazardous conditions. If provided, handrails shall comply with PROWAG R409.
32. Handrail extensions shall not protrude into the usable landing area or into intersecting pedestrian routes.
33. Driveways and turnouts shall be constructed and paid for in accordance with Item "Intersections, Driveways and Turnouts". Sidewalks shall be constructed and paid for in accordance with Item, "Sidewalks".
34. Sidewalk details are shown elsewhere in the plans.

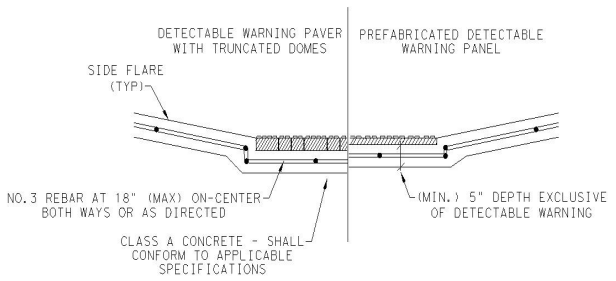

SECTION VIEW DETAIL
CURB RAMP AT DETECTIBLE WARNINGS

DETECTABLE WARNING SURFACE DETAILS

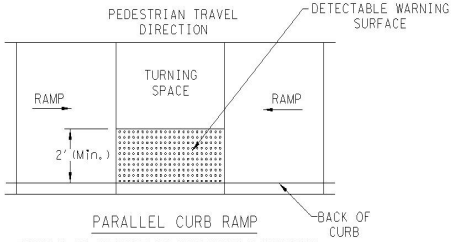

PARALLEL CURB RAMP
TYPICAL PLACEMENT OF DETECTABLE WARNING SURFACE ON LANDING AT STREET EDGE.

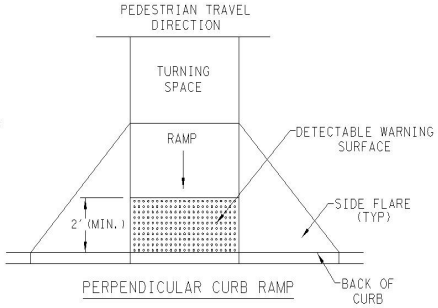

PERPENDICULAR CURB RAMP
TYPICAL PLACEMENT OF DETECTABLE WARNING SURFACE ON SLOPING RAMP RUN.

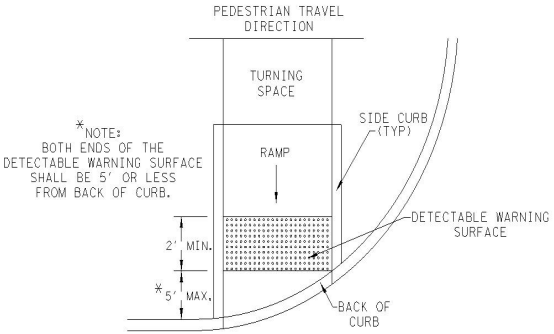

DIRECTIONAL CURB RAMP
TYPICAL PLACEMENT OF DETECTABLE WARNING SURFACE ON SLOPING RAMP RUN.

SHEET 2 OF 4

Texas Department of Transportation | Design Division Standard

PEDESTRIAN FACILITIES CURB RAMPS

PED-18

FILE: pedre	DN: TxDOT	DW: VP	CK: KM	CK: PK & JC
© TxDOT: MARCH, 2002	CONT	SECT	JOB	HIGHWAY
REVISIONS				
REVISED 08, 2005 REVISED 06, 2012 REVISED 01, 2018	DIST	COUNTY		SHEET NO.
				31

DISCLAIMER:
The use of this standard is governed by the "Texas Engineering Practice Act". No warranty of any kind is made by TxDOT for any purpose whatsoever. TxDOT assumes no responsibility for the conversion of this standard to other formats or for incorrect results or damages resulting from its use.

DATE:
FILE:

SIDEWALK TREATMENT AT DRIVEWAYS

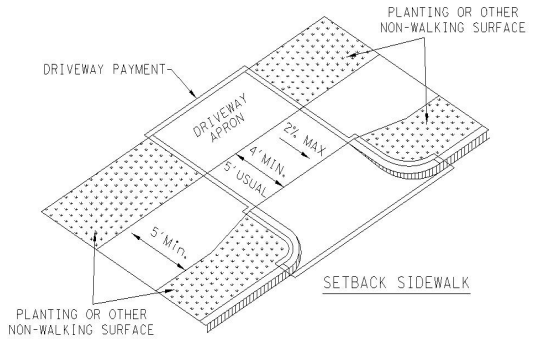

SETBACK SIDEWALK

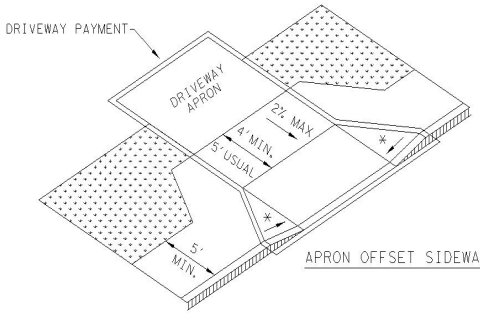

APRON OFFSET SIDEWALK

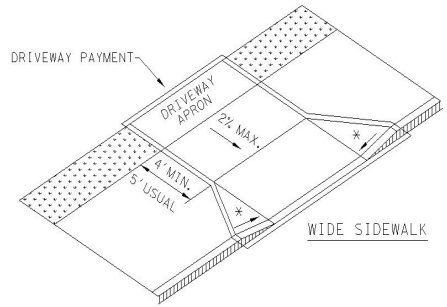

WIDE SIDEWALK

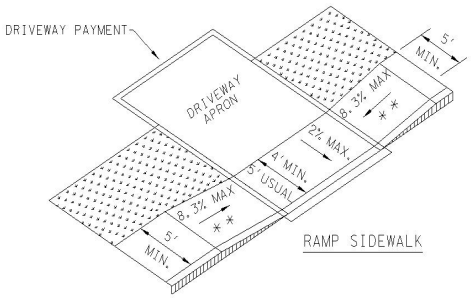

RAMP SIDEWALK

NOTES:

* WHERE DRIVEWAYS CROSS THE PEDESTRIAN ROUTE, SIDES SHALL BE FLARED AT 10% MAX SLOPE.

** IF CURB HEIGHT IS GREATER THAN 6 INCHES, USE GRADE LESS THAN OR EQUAL TO 5%. HANDRAIL AND DETECTABLE WARNING ARE NOT REQUIRED.

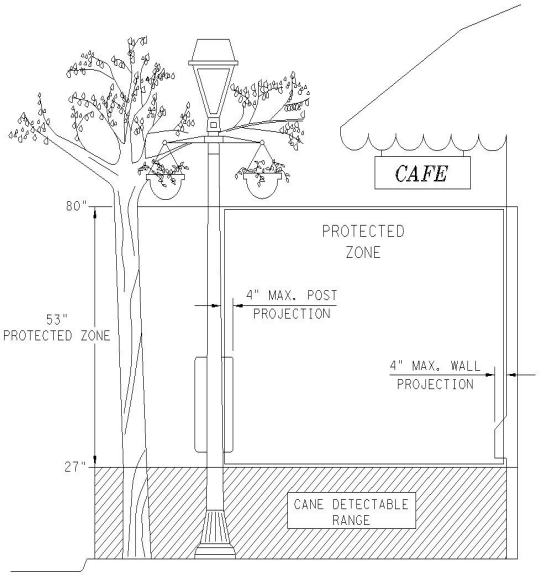

PROTECTED ZONE

NOTE: IN PEDESTRIAN CIRCULATION AREA, MAXIMUM 4" PROJECTION FOR POST OR WALL MOUNTED OBJECTS BETWEEN 27" AND 80" ABOVE THE SURFACE.

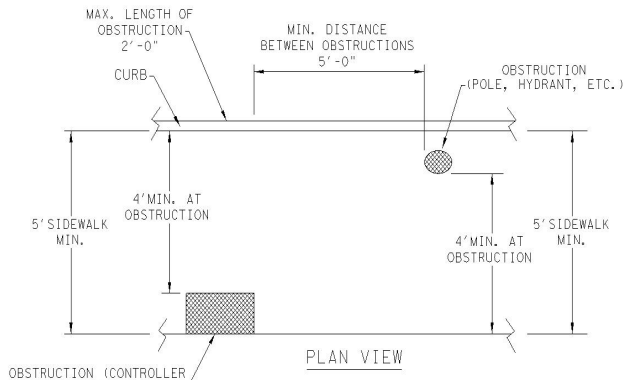

PLAN VIEW

PLACEMENT OF STREET FIXTURES

NOTE: ITEMS NOT INTENDED FOR PUBLIC USE. MINIMUM 4' X 4' CLEAR GROUND SPACE REQUIRED AT PUBLIC USE FIXTURES.

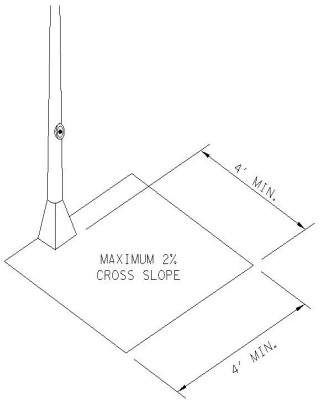

CLEAR SPACE ADJACENT TO PEDESTRIAN PUSH BUTTON

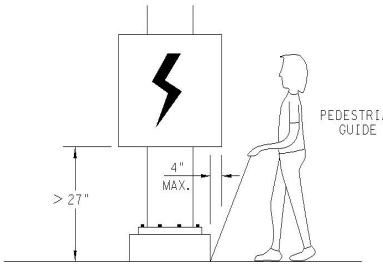

WHEN AN OBSTRUCTION OF A HEIGHT GREATER THAN 27" FROM THE SURFACE WOULD CREATE A PROTRUSION OF MORE THAN 4" INTO THE PEDESTRIAN CIRCULATION AREA, CONSTRUCT ADDITIONAL CURB OR FOUNDATION AT THE BOTTOM TO PROVIDE A MAXIMUM 4" OVERHANG.

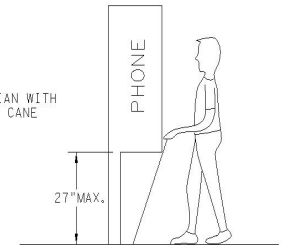

PROTRUDING OBJECTS OF A HEIGHT ≤27" ARE DETECTABLE BY CANE AND DO NOT REQUIRE ADDITIONAL TREATMENT.

DETECTION BARRIER FOR VERTICAL CLEARANCE < 80"

SHEET 3 OF 4

Texas Department of Transportation | Design Division Standard

PEDESTRIAN FACILITIES
CURB RAMPS

PED-18

FILE: ped18	DN: TxDOT	CK: VP	CK: KM	CK: PK & JC
© TxDOT: MARCH, 2002	CONT	SECT	JOB	HIGHWAY
REVISIONS				
REVISED 08, 2005 REVISED 06, 2012 REVISED 01, 2018	DIST	COUNTY		SHEET NO.
				32

DISCLAIMER:
The use of this standard is governed by the "Texas Engineering Practice Act". No warranty of any kind is made by TxDOT for any purpose whatsoever. TxDOT assumes no responsibility for the conversion of this standard to other formats or for incorrect results or damages resulting from its use.

DATE:
FILE:

TYPICAL CROSSING LAYOUTS

SEE SHEET 1 OF 4 FOR DETAILS AND DIMENSIONS

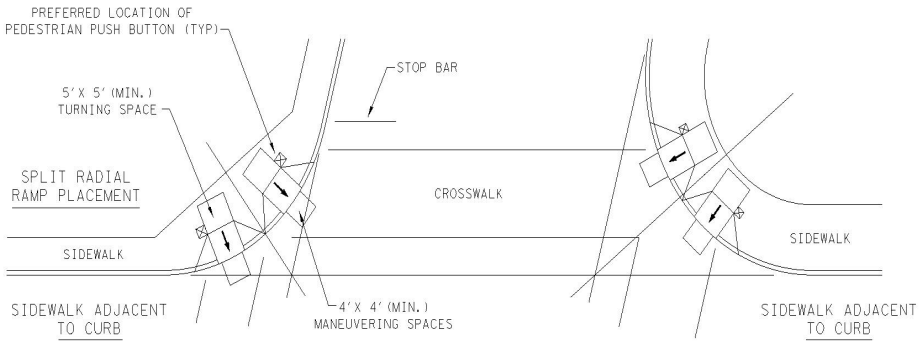

SKEWED INTERSECTION WITH "LARGE" RADIUS

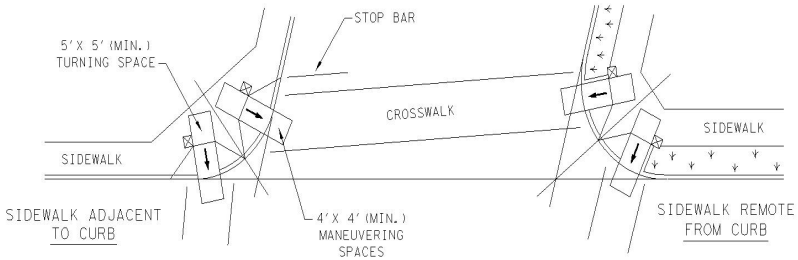

SKEWED INTERSECTION WITH "SMALL" RADIUS

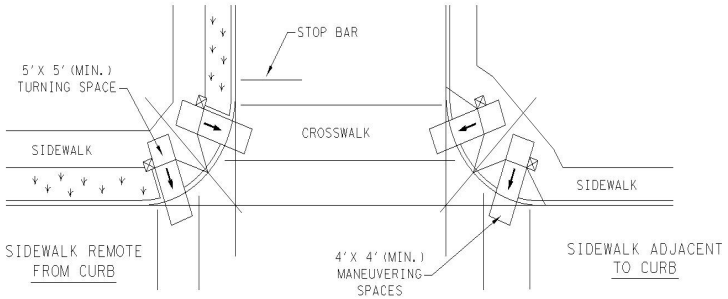

NORMAL INTERSECTION WITH "SMALL" RADIUS

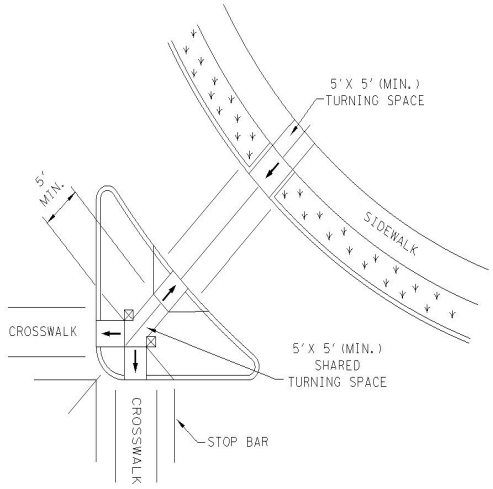

AT INTERSECTION
W/FREE RIGHT TURN & ISLAND

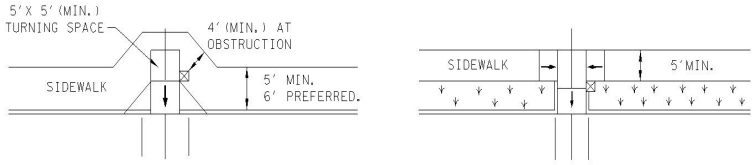

MID-BLOCK PLACEMENT
PERPENDICULAR RAMPS

LEGEND:

SHOWS DOWNWARD SLOPE. →

DENOTES PREFERRED LOCATION OF PEDESTRIAN PUSH BUTTON (IF APPLICABLE). ☒

DENOTES PLANTING OR NON-WALKING SURFACE NOT PART OF PEDESTRIAN CIRCULATION PATH.

SHEET 4 OF 4

Texas Department of Transportation | Design Division Standard

PEDESTRIAN FACILITIES CURB RAMPS

PED-18

FILE: ped18	DN: TxDOT	CK: VP	CK: KM	CK: PK & JC
© TxDOT: MARCH, 2002	CONT	SECT	JOB	HIGHWAY
REVISIONS				
REVISED 08,2005 REVISED 06,2012 REVISED 01,2018	DIST	COUNTY		SHEET NO.
				33

DISCLAIMER: The use of this standard is governed by the "Texas Engineering Practice Act". No warranty of any kind is made by TxDOT for any purpose whatsoever. TxDOT assumes no responsibility for the conversion of this standard to other formats or for incorrect results or damages resulting from its use.

DATE:
FILE:

Arm Length	ROUND POLES					POLYGONAL POLES					Foundation Type
	D_B	D_{19}	D_{24}	D_{30}	① thk	D_B	D_{19}	D_{24}	D_{30}	① thk	
ft.	in.	in.	in.	in.	in.	in.	in.	in.	in.	in.	
20	10.5	7.8	7.1	6.3	.179	11.5	8.5	7.7	6.8	.179	30-A
24	11.0	8.3	7.6	6.8	.179	12.0	9.0	8.2	7.3	.179	30-A
28	11.5	8.8	8.1	7.3	.179	12.5	9.5	8.7	7.8	.179	30-A
32	12.5	9.8	9.1	8.3	.179	12.0	9.0	8.2	7.3	.239	30-A
36	12.0	9.3	8.6	7.8	.239	12.5	9.5	8.7	7.8	.239	36-A
40	12.0	9.3	8.6	7.8	.239	13.5	10.5	9.7	8.8	.239	36-A
44	12.5	9.8	9.1	8.3	.239	14.0	11.0	10.2	9.3	.239	36-A
48	13.0	10.3	9.6	8.8	.239	15.0	12.0	11.2	10.3	.239	36-A

Arm Length	ROUND ARMS					POLYGONAL ARMS				
	L_1	D_1	D_2	① thk	Rise	L_1	D_1	② D_2	① thk	Rise
ft.	ft.	in.	in.	in.		ft.	in.	in.	in.	
20	19.1	6.5	3.8	.179	1'-9"	19.1	7.0	3.5	.179	1'-8"
24	23.1	7.5	4.3	.179	1'-10"	23.1	7.5	3.5	.179	1'-9"
28	27.1	8.0	4.2	.179	1'-11"	27.1	8.0	3.5	.179	1'-10"
32	31.0	9.0	4.7	.179	2'-1"	31.0	9.0	3.5	.179	2'-0"
36	35.0	9.5	4.6	.179	2'-4"	35.0	10.0	3.5	.179	2'-1"
40	39.0	9.5	4.1	.239	2'-8"	39.0	9.5	3.5	.239	2'-3"
44	43.0	10.0	4.1	.239	2'-11"	43.0	10.0	3.5	.239	2'-6"
48	47.0	10.5	4.1	.239	3'-4"	47.0	11.0	3.5	.239	2'-9"

D_B = Pole Base O.D.
D_{19} = Pole Top O.D. with no Luminaire and no ILSN
D_{24} = Pole Top O.D. with ILSN w/out Luminaire
D_{30} = Pole Top O.D. with Luminaire
D_1 = Arm Base O.D.
D_2 = Arm End O.D.
L_1 = Shaft Length
L = Nominal Arm Length

① Thickness shown are minimums, thicker materials may be used.

② D_2 may be increased by up to 1" for polygonal arms.

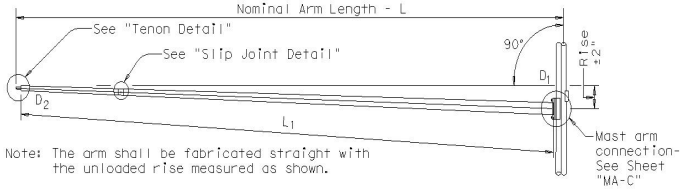

Note: The arm shall be fabricated straight with the unloaded rise measured as shown.

TRAFFIC SIGNAL ARM

(Fixed Mount)

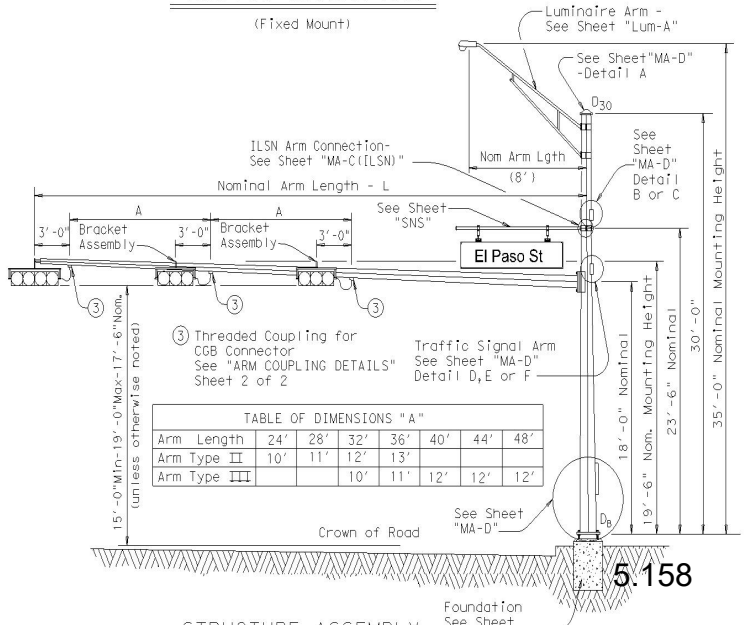

TABLE OF DIMENSIONS "A"							
Arm Length	24'	28'	32'	36'	40'	44'	48'
Arm Type II	10'	11'	12'	13'			
Arm Type III			10'	11'	12'	12'	12'

STRUCTURE ASSEMBLY

SHIPPING PARTS LIST

Ship each pole with the following attached: enlarged hand hole, pole cap, fixed-arm connection bolts and washers and any additional hardware listed in the table.

Nominal Arm Length	30' Poles With Luminaire		24' Poles With ILSN		19' Poles With No Luminaire and No ILSN	
	Above hardware plus: One (or two if ILSN attached) small hand hole, clamp-on simplex		Above hardware plus one small hand hole		See note above	
ft	Designation	Quantity	Designation	Quantity	Designation	Quantity
20	20L-80		20S-80		20-80	
24	24L-80		24S-80		24-80	
28	28L-80		28S-80		28-80	
32	32L-80		32S-80		32-80	
36	36L-80	1	36S-80		36-80	
40	40L-80		40S-80		40-80	
44	44L-80	1	44S-80		44-80	
48	48L-80		48S-80		48-80	

Traffic Signal Arms (1 per Pole) Ship each arm with the listed equipment attached

Nominal Arm Length	Type I Arm (1 Signal) 1 CGB connector		Type II Arm (2 Signals) 1 Bracket Assembly and 2 CGB Connectors		Type III Arm (3 Signals) 2 Bracket Assemblies and 3 CGB Connectors	
ft	Designation	Quantity	Designation	Quantity	Designation	Quantity
20	20I-80					
24	24I-80		24II-80			
28	28I-80		28II-80			
32			32II-80		32III-80	
36			36II-80	1	36III-80	
40					40III-80	
44					44III-80	1
48					48III-80	

Luminaire Arms (1 per 30' pole)

Nominal Arm Length	Quantity
8' Arm	2

ILSN Arm (Max. 2 per pole) Ship with clamps, bolts and washers

Nominal Arm Length	Quantity
7' Arm	
9' Arm	2

Anchor Bolt Assemblies (1 per pole)

Anchor Bolt Diameter	Anchor Bolt Length	Quantity
1 ½"	3'-4"	
1 ¾"	3'-10"	2

Each anchor bolt assembly consists of the following: Top and Bottom templates, 4 anchor bolts, 8 nuts, 8 flat washers, and 4 nut anchor devices (Type 2) per Standard Drawing "TS-FD".

Templates may be removed for shipment.

SHEET 1 OF 2

1/25/2023
STATE OF TEXAS
THOMAS W HARTMANN
109948
LICENSED PROFESSIONAL ENGINEER

Texas Department of Transportation
Traffic Operations Division

TRAFFIC SIGNAL SUPPORT STRUCTURES

SINGLE MAST ARM ASSEMBLY

(80 MPH WIND ZONE)

SMA-80(1)-12

© TxDOT August 1995

DN: MS	CK: JSY	DW: MWF	CK: JSY

REVISIONS	CONT	SECT	JOB	HIGHWAY
5-96				
11-99				
1-12				

DIST	COUNTY	SHEET NO.
		34

122A

DISCLAIMER: The use of this standard is governed by the "Texas Engineering Practice Act". No warranty of any kind is made by TxDOT for any purpose whatsoever. TxDOT assumes no responsibility for the conversion of this standard to other formats or for incorrect results or damages resulting from its use.

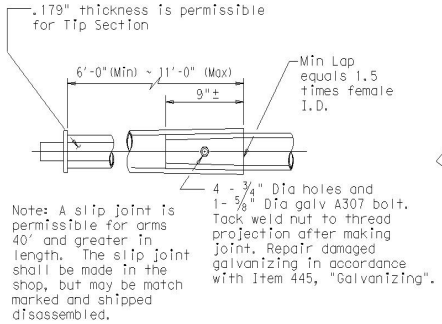

SLIP JOINT DETAIL

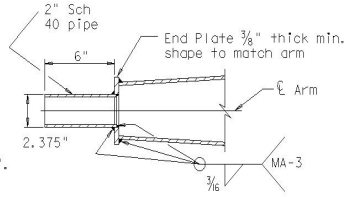

TENON DETAIL

VIBRATION WARNING

Mast Arms of SMA and DMA structures and clamp-on Arms of LMA structures of approximately 40 ft or longer are subject to harmonic vertical vibrations in light wind conditions due to the aeroelastic characteristics of a few of the myriads of possible combinations of the following: signal numbers, weights and positions; existence/solidity of backplates; presence of additional attachments to the arm, such as signs and cameras; arm-wind orientation; and arm-pole stiffness.

Such vibrations may cause fatigue damage to the structure and may lead to galloping in moderate wind conditions which may further damage the structure and alarm the public. Tests have indicated that when wind is blowing toward the back side of signal heads having un-vented backplates attached the probability of unacceptable harmonic vibration and/or galloping is rather high.

If backplates are not required for improved visibility they should not be applied to the signal heads or, if they must be applied, they should be vented as a first and inexpensive measure to mitigate vibrations.

The traffic signal mast arms shall be visually inspected in 5 to 20 mph wind conditions after installation of signal heads and any attachments, including any required backplates. If vertical movements with a total excursion (maximum upward excursion to maximum downward excursion) of more than approximately 8" are observed at the arm tip, a damping plate shall be fitted to the arm. See "Damping Plate Mounting Details" on standard sheet, MA-DPD-10.

This visual inspection shall be repeated after each modification of the structure that could affect its aeroelastic response. Excessive vibrations shall not be allowed to continue for more than two days.

Stainless steel bands (or Cables) and cast bracket as in "Astro-Brac", "Sky Bracket" or "Easy Bracket" with 1 1/2" Dia Threaded Coupling.

BRACKET ASSEMBLY

GENERAL NOTES:

Design conforms to 1994 AASHTO Standard Specifications for Structural Supports for Highway Signs, Luminaires, and Traffic Signals and Interim Specifications thereto. Design Wind Speed equals 80 mph plus a 1.3 gust factor.

Poles are designed to support one 8'-0" luminaire arm, one 9'-0" internally lighted street name sign and one traffic signal arm with a length as tabulated. The specified luminaire load applied at the end of the luminaire arm equals 60 lbs vertical dead load plus the horizontal wind load on an effective projected area of 1.6 sq ft. The specified internally lighted street name sign load applied 4.5 ft from the centerline of the pole equals 85 lbs vertical dead load plus horizontal wind load on an effective projected area of 11.5 sq ft. The specified signal load applied at the end of the traffic signal arm equals 180 lbs vertical dead load plus the horizontal wind load on an effective projected area of 32.4 sq ft (actual area times drag coefficient).

See Standard Sheet "MA-D" for pole details, "MA-C" for traffic signal arm connection details, "MA-C (ILSN)" for internally lighted street name sign arm connection details, "LUM-A" for luminaire arm and connection details, "SNS" for internally lighted street name sign details, and "TS-FD" for anchor bolt and foundation details. See "MA-C" for material specifications.

Fabrication shall be in accordance with Item 686, "Traffic Signal Pole Assemblies (Steel)" and with the details, dimensions, and weld procedures shown herein. Weld references call for preapproved weld procedures which the Fabricator must obtain prior to fabrication. Materials, fabrication tolerances, and shipping practices shall meet the requirements of this sheet and Item 686, "Traffic Signal Pole Assemblies (Steel)".

Unless otherwise noted, all parts shall be galvanized in accordance with Item 445, "Galvanizing", after fabrication.

Deviation from the details and dimensions shown herein require submission of shop drawings in accordance with Item 441, "Steel Structures". Alternate designs are not acceptable.

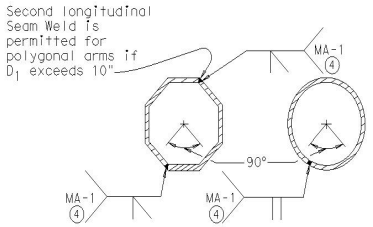

ARM WELD DETAIL

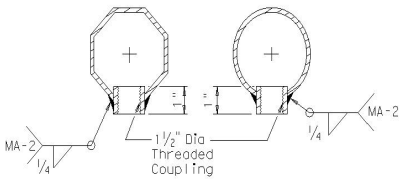

ARM COUPLING DETAILS

④ 60% Min. penetration 100% pemetration within 6" of circumferential base welds.

Texas Department of Transportation
Traffic Operations Division

TRAFFIC SIGNAL SUPPORT STRUCTURES

SINGLE MAST ARM ASSEMBLY

(80 MPH WIND ZONE)

SMA-80(2)-12

©TxDOT August 1994

DN: MS	CK: JSY	DW: MMF	CK: JSY
REVISIONS	CONT	SECT	JOB	HIGHWAY
5-96				
1-12				
	DIST	COUNTY		SHEET NO.
				35

122B

DATE:
FILE:

DISCLAIMER: The use of this standard is governed by the "Texas Engineering Practice Act". No warranty of any kind is made by TxDOT for any purpose whatsoever. TxDOT assumes no responsibility for the conversion of this standard to other formats or for incorrect results or damages resulting from its use.

DATE:
FILE:

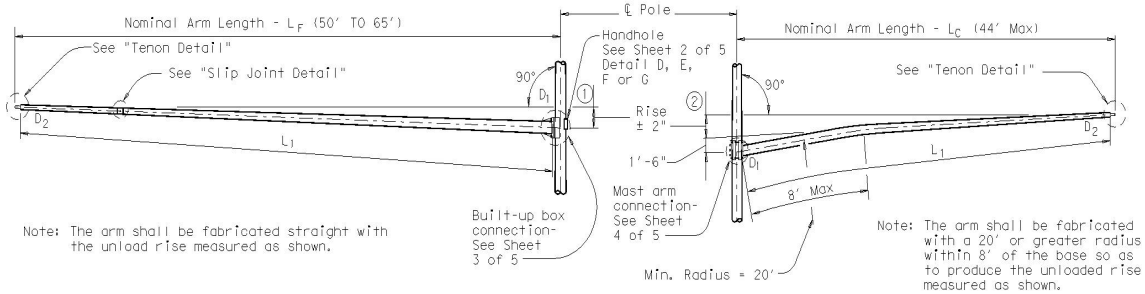

FIXED MOUNT TRAFFIC SIGNAL ARM

(1) See Sheet 3 of 5 for Arm Rise

CLAMP-ON TRAFFIC SIGNAL ARM (IF REQUIRED)

(2) See Sheet 4 of 5 for Arm Rise and Clamp-on Arm Details

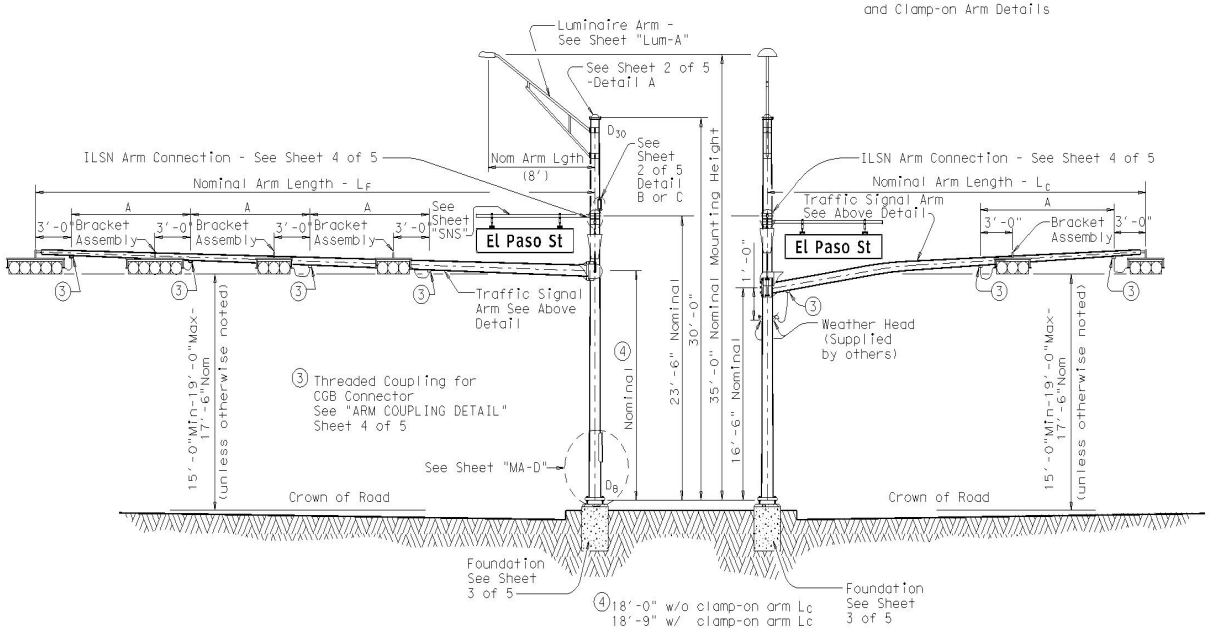

ELEVATION
(Showing fixed mount arm)

STRUCTURE ASSEMBLY

ELEVATION
(Showing clamp-on arm)

TABLE OF DIMENSIONS "A"

Arm Length	24'	28'	32'	36'	40'	44'	50'	55'	60'	65'
Arm Type II	10'	11'	12'	13'						
Arm Type III			10'	11'	12'	12'				
Arm Type IV							12'	12'	12'	12'

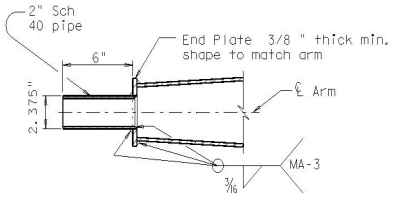

TENON DETAIL

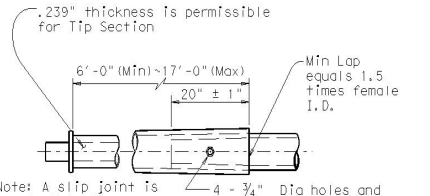

SLIP JOINT DETAIL (FIXED MOUNT ARM)

GENERAL NOTES:

Design conforms to 1994 AASHTO Standard Specifications for Structural Supports for Highway Signs, Luminaires, and Traffic Signals and Interim Specifications thereto. Design Wind Speed can be either 100 mph or 80 mph plus a 1.3 gust factor. If clamp-on traffic signal is required, designs are based on an arm included angle of 90 degrees or more. Angles of less than approximately 75 degrees will require a special design.

Poles are designed to support one 8'-0" luminaire arm, two 9'-0" internally lighted street name (ILSN) signs and two traffic signal arms with limited length combinations.

Each arm with its related attachment is shown below

Arm	Equivalent DL (5)	WL EPA (5)(6)
8' Luminaire Arm	Luminaire 60 lbs	1.6 sq ft
9' ILSN Arm	Sign 85 lbs	11.5 sq ft
50' to 65' Fixed Mount Arm	Signal Loads 310 lbs	52 sq ft
Up to 44' Clamp-on Arm	Signal Loads 180 lbs	32.4 sq ft

(5) Equivalent dead load plus horizontal wind load applied at the end of arm except ILSN arm, which applied 4.5' from the centerline of the pole.

(6) Effective projected area (actual area times drag coefficient) for the application of horizontal wind load.

Except as noted in Sheet 1 thru 5 of 5, other details not covered shall refer to Standard Sheet "MA-D" for pole details, "LUM-A" for luminaire arm and connection details, "SNS" for internally lighted street name sign details, and "TS-FD" for anchor bolt and foundation details.

Fabrication shall be in accordance with Item 686, "Traffic Signal Pole Assemblies (Steel)" and with the details, dimensions, and weld procedures shown herein. Weld references call for preapproved weld procedures which the Fabricator must obtain prior to fabrication. Material, fabrication tolerances, and shipping practices shall also meet the requirements of this sheet and Item 686, "Traffic Signal Pole Assemblies (Steel)".

Unless otherwise noted, all parts shall be galvanized in accordance with Item 445, "Galvanizing" after fabrication.

Deviations from the details and dimensions shown herein require submission of shop drawings in accordance with the Item 441, "Steel Structures". Alternate designs are not acceptable.

Installation of damping plate for the long mast arm is not recommended.

Provision of the bracket assembly used to support the traffic signal heads shall be under the direction of the Engineer for approval.

Design also conforms to NCHRP Report 412 for fatigue resistance except that there are no stiffeners at the base plate. TxDOT is conducting tests to determine if stiffeners at the base plate will or will not result in optimal performance; depending upon the results of the tests, poles may need a retrofit to ensure optimal fatigue performance.

Texas Department of Transportation
Traffic Operations Division

TRAFFIC SIGNAL SUPPORT STRUCTURES
LONG MAST ARM ASSEMBLY (50 TO 65 FT) (80 AND 100 MPH WIND ZONE)
LMA(1)-12

Sheet 1 of 5

©TxDOT, July 2006

REVISIONS	DN: TxDOT	CK: TxDOT	DW: TxDOT	CK: TxDOT
4-20-01 1-12	CONT	SECT	JOB	HIGHWAY
	DIST	COUNTY		SHEET NO.
				36

131A

DISCLAIMER: The use of this standard is governed by the "Texas Engineering Practice Act". No warranty of any kind is made by TxDOT for any purpose whatsoever. TxDOT assumes no responsibility for the conversion of this standard to other formats or for incorrect results or damages resulting from its use.

DATE:
FILE:

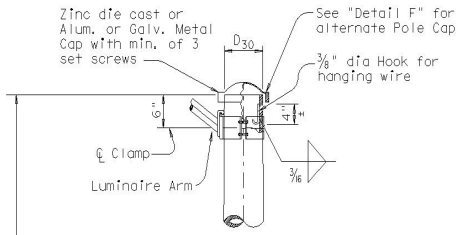

DETAIL A

(for pole with luminaire)

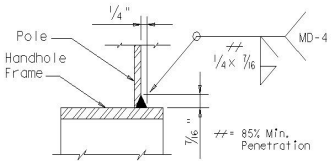

DETAIL H

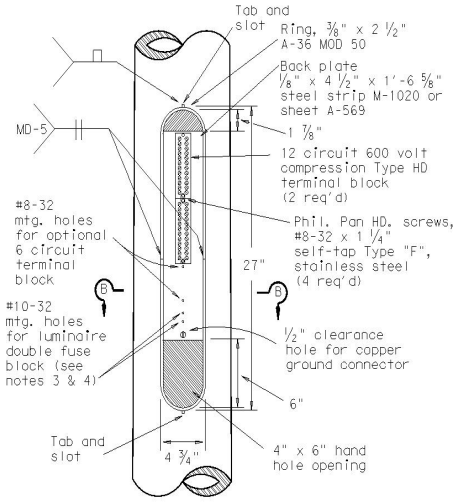

ACCESS COMPARTMENT

MATERIALS	
Round Shafts or Polygonal Shafts (7)	ASTM A595 Gr.A, A588, A1008 HSLAS Gr.50 Class 2, A1011 HSLAS Gr.50 Class 2, A572 Gr.50 or A1011 SS Gr.50 (8)
Plates (7)	ASTM A36, A588, or A572 Gr.50
Connection Bolts	ASTM A325, or A449 except where noted
Pin Bolts	ASTM A325
Pipe (7)	ASTM A53 Gr.B, A501, A1008 HSLAS-F Gr.50, A1011 HSLAS-F Gr.50
Misc. Hardware	Galvanized steel or stainless steel or as noted

(7) ASTM A572, A1008 HSLAS, A1011 HSLAS, A1008 HSLAS-F, A1011 HSLAS-F, or A1011 SS may have higher yield strengths but shall not have less elongation than the grade indicated.

(8) ASTM A1011 SS Gr.50 shall also have a minimum elongation of 18 percent in 8 inches or 23 percent in 2 inches. Material thickness in excess of those stipulated under A1011 SS will be acceptable providing the material meets all other A1011 SS requirements and the requirements of this item.

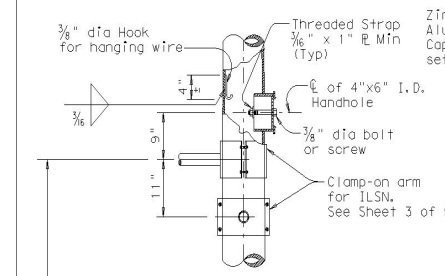

DETAIL B

(If ILSN applied)

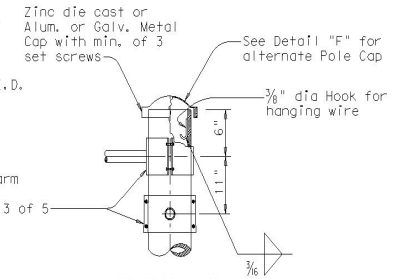

DETAIL C

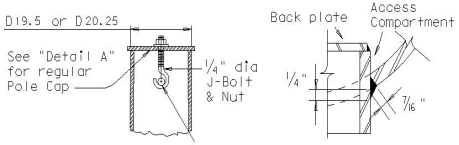

SECTION Y-Y

DETAIL J

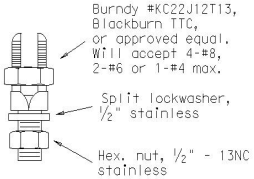

COPPER GROUND CONNECTOR

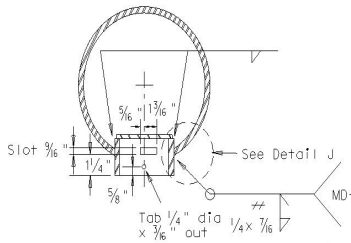

SECTION B-B

Opening for access compartment shall be no more than 1/16 inch wider than the access compartment itself.

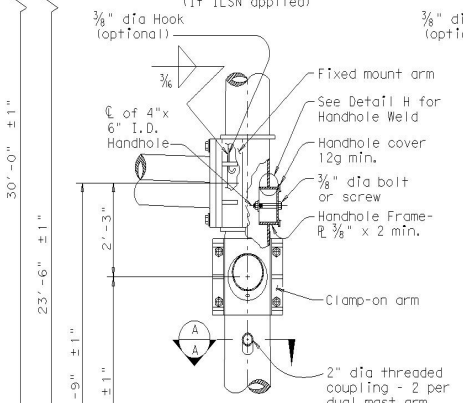

DETAIL D

(for 30' pole with luminaire and ILSN sign)

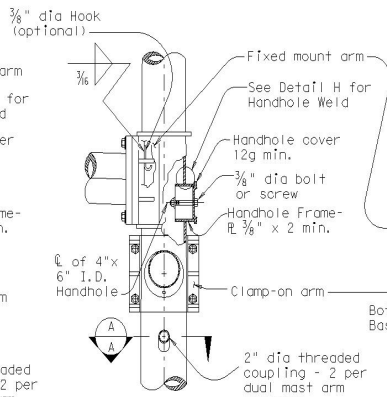

DETAIL E

(for 24' pole with ILSN sign and no luminaire, single or dual mast arm)

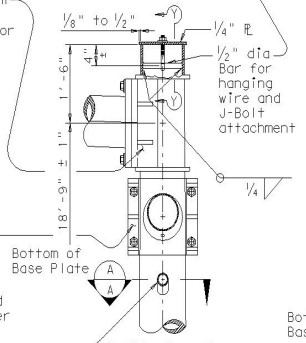

DETAIL F

(for 20.25' pole with no ILSN sign and no luminaire, dual mast arm)

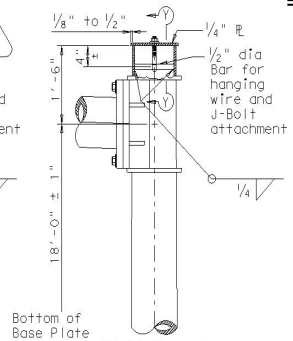

DETAIL G

(for 19.5' pole with no ILSN sign and no luminaire, single mast arm)

ACCESS COMPARTMENT NOTES:

1. The cover shall be one piece formed from ABS plastic, shall be a pearl gray color, and shall be suitable for exposure to harsh sunlight and extreme weather. Cover shall latch with two screw latches and shall fit tightly to the enclosure ring to create a rainproof seal. Latch screws shall be 1/4-20 stainless flat socket head screws with tamper proof feature.
2. The pole manufacturer shall provide with each pole a separate kit consisting of: one cover with two latching assemblies, two terminal strips (Marathon #985GP12CU or approved equal), four #8-32 x 1 1/4" self tapping type "F" stainless steel pan head screws, and one ground connector (Blackburn TTC, Burndy KC22J12T13, or Ilsco SSS-5). The traffic signal contractor shall install the kit items in the field.
3. The screw hole spacing on the enclosure back plate shall be for two Marathon #985GP12 terminal strips, one Marathon #985GP06CU terminal strip, and one Bussmann #BM6032B fuse block.
4. Install one Bussmann #BM6032B, Littelfuse #L60030M-2C, or Ferraz-Shawmut #30352 fuse block for poles where luminaires are to be installed.

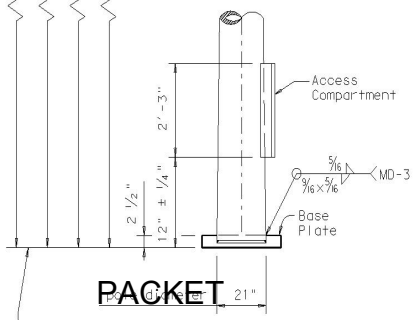

POLE ELEVATION

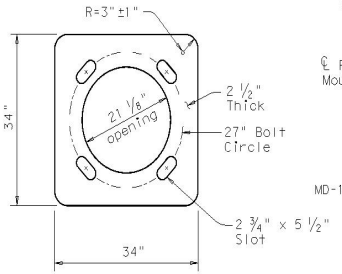

BASE PLATE

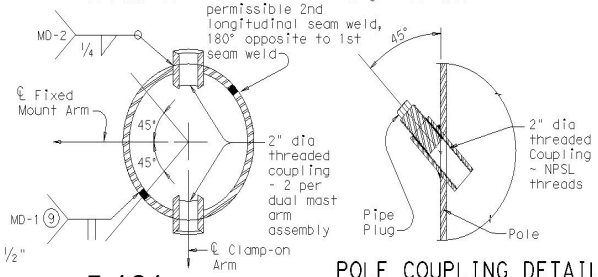

SECTION A-A

POLE COUPLING DETAIL

(9) Longitudinal seam weld must be oriented within 90° (45° rotation each side) along the fixed mount arm, 60% min penetration required, 100% penetration within 6" of circumferential base weld.

Texas Department of Transportation
Traffic Operations Division

TRAFFIC SIGNAL SUPPORT STRUCTURES

LONG MAST ARM ASSEMBLY (50 TO 65 FT) (80 AND 100 MPH WIND ZONE)

LMA(2)-12

Sheet 2 of 5

©TxDOT July 2006

DN: JSY	CK: ARC	DW: TGG	CK: JSY
REVISIONS	CONT	SECT	JOB	HIGHWAY
4-20-01				
11-12				
	DIST	COUNTY		SHEET NO.
				37

131B

PACKET 5.161 July 11, 2023

DISCLAIMER: The use of this standard is governed by the "Texas Engineering Practice Act". No warranty of any kind is made by TxDOT for any purpose whatsoever. TxDOT assumes no responsibility for the conversion of this standard to other formats or for incorrect results or damages resulting from its use.

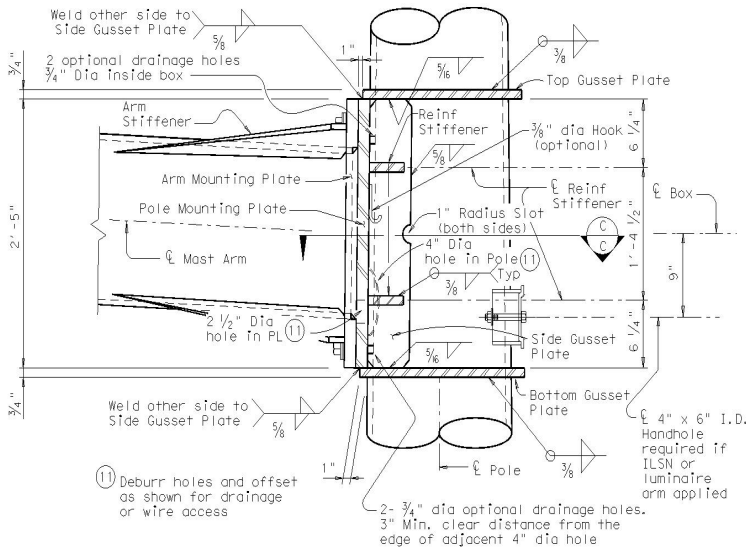

BUILT-UP BOX CONNECTION

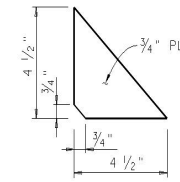

REINFORCING STIFFENER

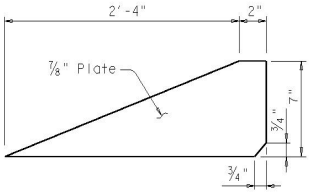

ARM STIFFENER
(Cut to match arm inclination and taper)

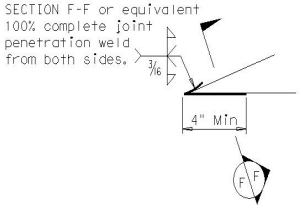

Only 4" length at tip of Arm Stiffener requires a complete joint penetration weld. Smooth weld radius to connect Stiffener. Only a fillet weld is required for the remaining weld length.

DETAIL "K"

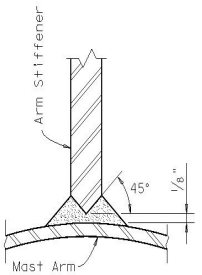

SECTION F-F

Fixed Mount Arm L_F	ROUND POLES (13)					Foundation Type
	D_B	$D_{19.5}$ or $D_{20.25}$	D_{24}	D_{30}	(12) thk	
ft.	in.	in.	in.	in.	in.	
50', 55' 60', 65'	21.0	18.2	17.6	16.8	.3125	48-A

Fixed Mount Arm L_F	ROUND ARMS (13)				
	L_1	D_1	D_2	(12) thk	Rise
ft.	ft.	in.	in.	in.	
50	49	18.5	11.7	.3125	3'- 3"
55	54	18.5	11.0	.3125	3'- 7"
60	59	18.5	10.3	.3125	3'-11"
65	64	18.5	9.6	.3125	4'- 4"

D_B = Pole Base O.D.
$D_{19.5}$ = Pole Top O.D. with no Luminaire and no ILSN (single mast arm)
$D_{20.25}$ = Pole Top O.D. with no Luminaire and no ILSN (dual mast arm)
D_{24} = Pole Top O.D. with ILSN w/out Luminaire
D_{30} = Pole Top O.D. with Luminaire
D_1 = Arm Base O.D.
D_2 = Arm End O.D.
L_1 = Shaft Length
L_F = Fixed Arm Length

(12) Thickness shown is minimum, thicker materials may be used.

(13) Shaft profile 16-sided or 18-sided is considered to be equivalent to round section.

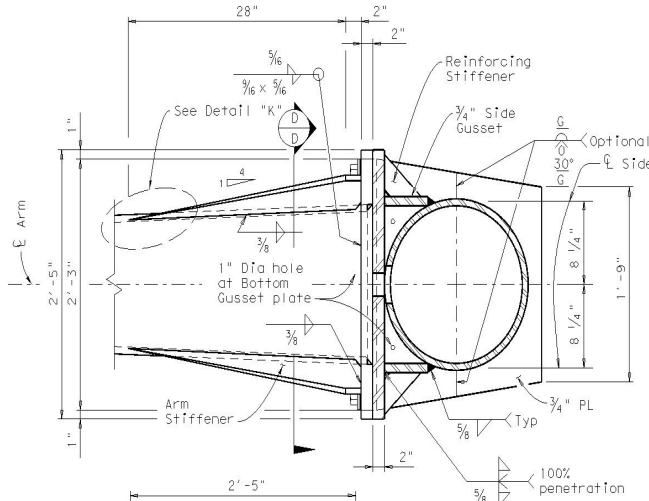

SECTION C-C

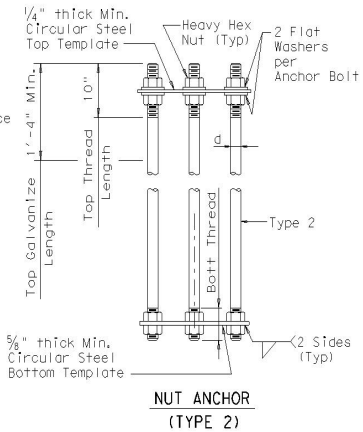

NUT ANCHOR
(TYPE 2)

ANCHOR BOLT ASSEMBLY

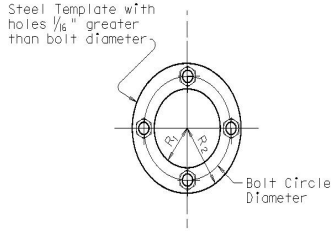

TEMPLATE DETAIL

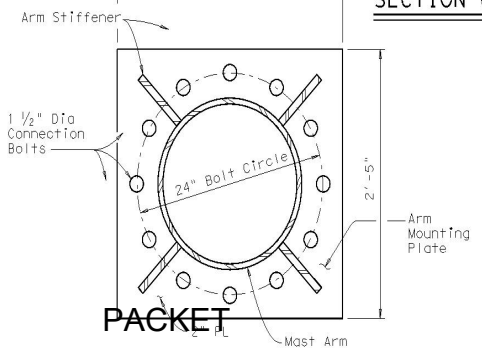

SECTION D-D

GENERAL NOTES:

Built-up Box Connection: For the welded arm-to-pole connection as a build-up box configuration illustrated here is an example only, fabricators are required to submit a shop drawing of box connection for approval. The drawing shall specify the details of each box element, welds of arm-to-pole connection, arm-to-plate socket connection, and arm rise creation. Specify the proper location of drain holes along the pole. 2 ½" dia hole in the pole mounting plate and 4" dia hole in the pole need to be aligned for wiring access or drainage. Arm stiffeners cut to match arm inclination and taper shall also be included.

The deviation from flat for either arm or pole mounting plate shall not exceed 3/32 in., which is measured along the center of mounting plate to a radial distance of 13.5 in. The deformed-from-flat connection between arm and pole mounting plates shall not be allowed if the center of both mounting plates cannot contact directly.

Fixed mount details are used for single mast arm assemblies and for the first arm on dual mast arm assemblies.

ANCHOR BOLT & TEMPLATE SIZE						
Bolt Dia in.	Length ‡	Top Thread	Bottom Thread	Bolt Circle	R_2	R_1
2 ½"	5'-2"	10"	6 ½"	27"	16"	11"

‡ Min dimension given, longer bolts are acceptable.

FOUNDATION DESIGN TABLE

FDN TYPE	DRILLED SHAFT DIA	REINFORCING STEEL		DRILLED SHAFT LENGTH-ft (16), (17), (18)			ANCHOR BOLT DESIGN (14)				FOUNDATION DESIGN LOAD (15)		TYPICAL APPLICATION
		VERT BARS	SPIRAL & PITCH	TEXAS CONE PENETROMETER N blows/ft			ANCHOR BOLT DIA	Fy (ksi)	BOLT CIR DIA	ANCHOR TYPE	MOMENT K-ft	SHEAR Kips	
				10	15	40							
48-A	48"	20 #9	#4 at 6"	21.9	19.5	14.7	2 ½"	55	27"	2	490	10	50' to 65' Mast arm assembly.

SEE SHEET "TS-FD" FOR ADDITIONAL DETAILS.

(14) Anchor bolt design develops the foundation capacity given under Foundation Design Loads.

(15) Foundation Design Loads are the allowable moments and shears at the base of the structure.

(16) Field Penetrometer readings at a depth of approximately 3 to 5 feet may be used to adjust shaft lengths.

(17) If rock is encountered, the Drilled Shaft shall extend a minimum of two diameters into solid rock.

(18) Decimal lengths in Design Table are to allow interpolation for other penetrometer values. Round to nearest foot for entry into Summary Table.

Texas Department of Transportation

TRAFFIC SIGNAL SUPPORT STRUCTURES
LONG MAST ARM ASSEMBLY (50 TO 65 FT) (80 AND 100 MPH WIND ZONE)

Sheet 3 of 5 LMA(3)-12

©TxDOT July 2006

DN: JSY	CK: ARG	DW: TCG	CK: JSY
REVISIONS	CONT	SECT	JOB	HIGHWAY
4-20-01 1-12	.	.	.	.
	DIST	COUNTY		SHEET NO.
	.	.		38

131C

PACKET 5.162 July 11 2023

DISCLAIMER: The use of this standard is governed by the "Texas Engineering Practice Act". No warranty of any kind is made by TxDOT for any purpose whatsoever. TxDOT assumes no responsibility for the conversion of this standard to other formats or for incorrect results or damages resulting from its use.

DATE:
FILE:

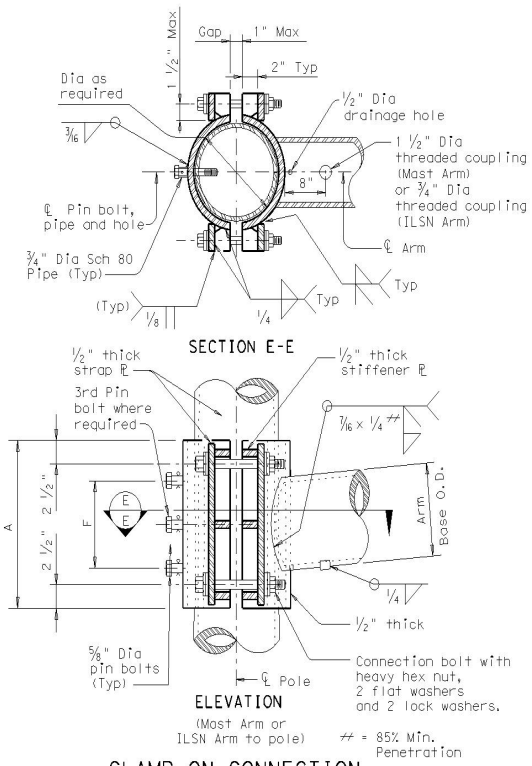

CLAMP-ON CONNECTION

80 MPH WIND

Clamp-on Arm Lc	ROUND ARMS					POLYGONAL ARMS				
	L_1	D_1	D_2	thk (12)	Rise	L_1	D_1	D_2	thk (12)	Rise
ft.	ft.	in.	in.	in.		ft.	in.	in.	in.	
20	19.1	6.5	3.8	.179	1'-9"	19.1	7.0	3.5	.179	1'-8"
24	23.1	7.5	4.3	.179	1'-10"	23.1	7.5	3.5	.179	1'-9"
28	27.1	8.0	4.2	.179	1'-11"	27.1	8.0	3.5	.179	1'-10"
32	31.0	9.0	4.7	.179	2'-1"	31.0	9.0	3.5	.179	2'-0"
36	35.0	9.5	4.6	.179	2'-4"	35.0	10.0	3.5	.179	2'-1"
40	39.0	9.5	4.1	.239	2'-8"	39.0	9.5	3.5	.239	2'-3"
44	43.0	10.0	4.1	.239	2'-11"	43.0	10.0	3.5	.239	2'-6"

100 MPH WIND

Clamp-on Arm Lc	ROUND ARMS					POLYGONAL ARMS				
	L_1	D_1	D_2	thk (12)	Rise	L_1	D_1	D_2	thk (12)	Rise
ft.	ft.	in.	in.	in.		ft.	in.	in.	in.	
20	19.1	8.0	5.3	.179	1'-8"	19.1	8.0	3.5	.179	1'-7"
24	23.1	9.0	5.8	.179	1'-9"	23.1	9.0	3.5	.179	1'-8"
28	27.1	9.5	5.7	.179	1'-10"	27.1	10.0	3.5	.179	1'-9"
32	31.0	9.5	5.2	.239	1'-11"	31.0	9.5	3.5	.239	1'-10"
36	35.0	10.0	5.1	.239	2'-0"	35.0	10.0	3.5	.239	1'-11"
40	39.0	10.5	5.1	.239	2'-3"	39.0	11.0	3.5	.239	2'-1"
44	43.0	11.0	5.1	.239	2'-8"	43.0	11.5	4.0	.239	2'-3"

D_1 = Arm Base O.D.
D_2 = Arm End O.D.
L_1 = Shaft Length
Lc = Clamp-on Arm Length

(12) Thickness shown is minimum, thicker materials may be used.

CLAMP-ON ARM CONNECTION

ILSN Arm Size		A	F	4 Conn. Bolts	⅝" Dia. Pin Bolts
Sch 40 pipe Dia	Thick			Dia	No.
in.	in.	in.	in.	in.	ea
3	.216	10	4	¾	2

Mast Arm Size		A	F	4 Conn. Bolts	⅝" Dia. Pin Bolts
Base Dia	Thick			Dia	No.
in.	in.	in.	in.	in.	ea
6.5	.179	12	6	1	2
7.5	.179	14	8	1	2
8.0	.179	14	8	1	2
9.0	.179	16	10	1	2
9.5	.179	18	12	1 ¼	3
9.5	.239	18	12	1 ¼	3
10.0	.239	18	12	1 ¼	3
10.5	.239	18	12	1 ¼	3
11.0	.239	18	12	1 ¼	3
11.5	.239	18	12	1 ¼	3

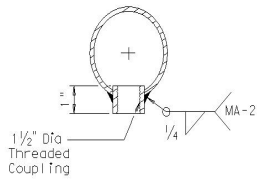

ARM COUPLING DETAIL

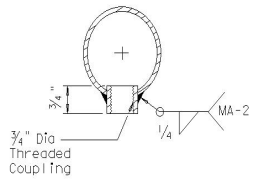

ILSN ARM COUPLING DETAIL

GENERAL NOTES:

Clamp-on details are used for the second arm on dual mast arm assemblies or ILSN arm support. For a clamp-on mast arm, a maximum 1 ½" wide vertical slotted hole may be cut in the front clamp plate to facilitate drainage during galvanizing. The slot shall be centered behind the arm and shall be no longer than the arm diameter minus 1". For an ILSN arm, a 1 ½" diameter hole shall be cut in the front clamp plate for wire access. A matched hole shall be field drilled through the pole to provide wire access after arm is oriented. Deburr both holes.

Where duplicate parts occur on a detail, welds shown for part shall apply to all similar parts on the detail.

Pin bolts are required to prevent rotation of clamp-on arms under design wind forces. Pin bolts shall be ASTM A325 with threads excluded from the shear plane. Pin bolt and ¾" diameter pipe shall have ⅜" diameter holes for a ⅛" diameter galvanized cotter pin. Back clamp plate shall be furnished with a ¾" diameter hole for each pin bolt. An 11/16" diameter hole for each pin bolt shall be field drilled through the pole after arm orientations have been approved by the Engineer.

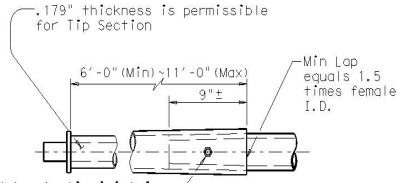

SLIP JOINT DETAIL (CLAMP-ON ARM)

Stainless steel bands (or Cables) and cast bracket as in "Astro-Brac", "Sky Bracket" or "Easy Bracket" with 1 ½" Dia Threaded Coupling.

BRACKET ASSEMBLY

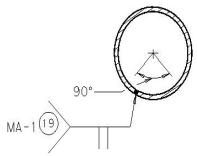

ARM WELD DETAIL

(19) Longitudinal Seam Weld must be oriented within the lower 90° of the signal arm. 60% Min penetration 100% penetration within 6" of circumferential base welds.

Texas Department of Transportation
Traffic Operations Division

TRAFFIC SIGNAL SUPPORT STRUCTURES
LONG MAST ARM ASSEMBLY (50 TO 65 FT) (80 AND 100 MPH WIND ZONE)

Sheet 4 of 5 LMA(4)-12

©TxDOT November 2000

DN: JK	CK: GRB	DW: FDN	CK: CAL
REVISIONS	CONT	SECT	JOB	HIGHWAY
4-20-01 I-12				
	DIST	COUNTY	SHEET NO.
			39

1310

DISCLAIMER: The use of this standard is governed by the "Texas Engineering Practice Act". No warranty of any kind is made by TxDOT for any purpose whatsoever. TxDOT assumes no responsibility for the conversion of this standard to other formats or for incorrect results or damages resulting from its use.

DATE:
FILE:

Shipping Parts List

Ship each pole with the following attached: enlarged hand hole, pole cap, fixed arm connection bolts and washers, and any additional hardware listed in the table.

Nominal Arm Length	30' Poles with Luminaire	24' Poles with ILSN	19.50' (Single Mast Arm) 20.25' (Dual Mast Arm) Poles with no Luminaire and no ILSN
	See note above plus: one (or two if ILSN attached) small hand hole, clamp-on simplex	See note above plus one small hand hole	See note above

Single Mast Arm

Lf ft.	Designation	Quantity	Designation	Quantity	Designation	Quantity
50	50L		50S		50	
55	55L	1	55S	1	55	
60	60L		60S		60	
65	65L		65S		65	

Dual Mast Arm

Lf ft.	Lc ft.	Designation	Quantity	Designation	Quantity	Designation	Quantity
50	20	5020L		5020S		5020	
	24	5024L		5024S		5024	
	28	5028L		5028S		5028	
	32	5032L		5032S		5032	
	36	5036L		5036S		5036	
	40	5040L		5040S		5040	
	44	5044L		5044S		5044	
55	20	5520L		5520S		5520	
	24	5524L		5524S		5524	
	28	5528L		5528S		5528	
	32	5532L		5532S		5532	
	36	5536L		5536S		5536	
	40	5540L		5540S		5540	
	44	5544L		5544S		5544	
60	20	6020L		6020S		6020	
	24	6024L		6024S		6024	
	28	6028L		6028S		6028	
	32	6032L		6032S		6032	
	36	6036L		6036S		6036	
	40	6040L		6040S		6040	
	44	6044L		6044S		6044	
65	20	6520L		6520S		6520	
	24	6524L		6524S		6524	
	28	6528L		6528S		6528	
	32	6532L		6532S		6532	
	36	6536L		6536S		6536	
	40	6540L		6540S		6540	
	44	6544L		6544S		6544	

Shipping Parts List

Traffic Signal Arms (Fixed Mount) (1 per pole)
Ship each arm with listed equipment attached

Nominal Arm Length	Type IV Arm (4 Signals) 3 Bracket Assembly and 4 CGB Connectors	
ft.	Designation	Quantity
50	50IV	
55	55IV	2
60	60IV	
65	65IV	

Luminaire Arms (1 per 30' pole)

Nominal Arm Length	Quantity
8' Arm	1

ILSN Arm (Max. 2 per pole) Ship with clamps, bolts and washers

Nominal Arm Length	Quantity
7' Arm	
9' Arm	2

Traffic Signal Arms (80 MPH Clamp-On Mount) (1 per pole) Ship each arm with listed equipment attached

Nominal Arm Length	Type I Arm (1 Signal) 2 CGB connector and 1 clamp w/bolts and washers		Type II Arm (2 Signals) 1 Bracket Assembly and 3 CGB connectors, and 1 clamp w/bolts and washers		Type III Arm (3 Signals) 2 Bracket Assembly and 4 CGB connectors, and 1 clamp w/bolts and washers	
ft.	Designation	Quantity	Designation	Quantity	Designation	Quantity
20	20I-80					
24	24I-80		24II-80			
28	28I-80		28II-80			
32			32II-80		32III-80	
36			36II-80		36III-80	
40					40III-80	
44					44III-80	

Traffic Signal Arms (100 MPH Clamp-On Mount) (1 per pole) Ship each arm with listed equipment attached

Nominal Arm	Type I Arm (1 Signal) 2 CGB connector and 1 clamp w/bolts and washers		Type II Arm (2 Signals) 1 Bracket Assembly and 3 CGB connectors, and 1 clamp		Type III Arm (3 Signals) 2 Bracket Assembly and 4 CGB connectors, and 1 clamp	
ft.	Designation	Quantity	Designation	Quantity	Designation	Quantity
20	20I-100					
24	24I-100		24II-100			
28	28I-100		28II-100			
32			32II-100		32III-100	
36			36II-100		36III-100	
40					40III-100	
44					44III-100	

Anchor Bolt Assemblies (1 per pole)

Anchor Bolt Diameter	Anchor Bolt Length	Quantity
2 1/2 "	5' - 3"	2

Each anchor bolt assembly consists of the following: Top and bottom templates, 4 anchor bolts, 8 nuts, 8 flat washers and 4 nut anchor devices (type 2) per Standard Drawing "TS-FD". Templates may be removed for shipment.

Foundation Summary Table **

Location Ident.	Avg. N Blow/ft.	No. Each	Drill Shaft *** Length (feet)
			48-A
BIG SPRING ST AT LONE STAR LN	10	2	50 +
Total Drill Shaft Length			44

Notes

** Foundations may be listed separately or grouped according to similarity of location and type. Quantities are for the Contractor's information only.

*** Decimal lengths in Design Table are to allow interpolation for other penetrometer values. Round to nearest foot for entry into Summary Table.

+ PER CITY OF MIDLAND, EXTEND HEIGHT OF DRILLED SHAFTS FOR 20 FEET OF CLEARANCE FROM CROWN OF ROAD TO BOTTOM OF SIGNAL HEADS ON BIG SPRING STREET

Abbreviations

Lf= Fixed Arm Length
Lc= Clamp-on Arm Length (44' Max.)

1/25/2023
STATE OF TEXAS
THOMAS W. HARTMANN
109948
LICENSED
PROFESSIONAL ENGINEER

Texas Department of Transportation
Traffic Operations Division

LONG MAST ARM ASSEMBLY PARTS LIST

LMA(5)-12

Sheet 5 of 5

PACKET 5.164 July 11 2023

©TxDOT November 2000

DN: JK	CK: GRB	DW: FDN	CK: CAL
REVISIONS	CONT	SECT	JOB	HIGHWAY
4-20-01 1-12				
	DIST	COUNTY	SHEET NO.
			40

131E

DISCLAIMER:
The use of this standard is governed by the "Texas Engineering Practice Act". No warranty of any kind is made by TxDOT for any purpose whatsoever. TxDOT assumes no responsibility for the conversion of this standard to other formats or for incorrect results or damages resulting from its use.

DATE:
FILE:

ARM SIZE D_1	#	A	B	C	D	E	CONN BOLT DIA
in.	in.	in.	in.	in.	in.	in.	in.
6.5	.179	12	9	9	6	1 3/4	1
7.5	.179	13	9	10	6	1 3/4	1
8.0	.179	14	10	11	7	2	1 1/4
9.0	.179	16	11	13	8	2	1 1/4
9.5	.179	17	12	14	9	2	1 1/4
9.5	.239	18	12	15	9	2	1 1/4
10.0	.239	18	12	15	9	2	1 1/4
10.5	.239	18	13	15	10	3	1 1/2
11.0	.239	18	13	15	10	3	1 1/2

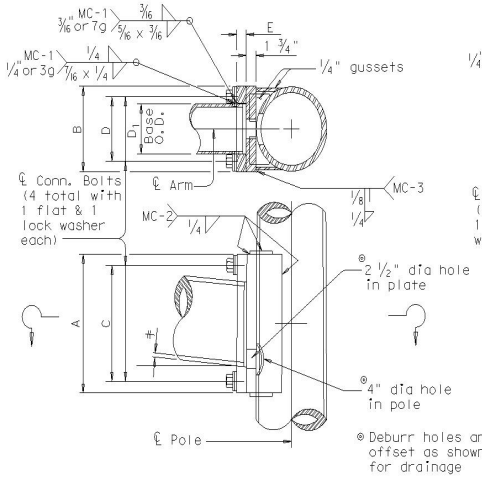

FIXED MOUNT DETAIL 1

ARM SIZE D_1	#	A	B	C	D	E	CONN BOLT DIA
in.	in.	in.	in.	in.	in.	in.	in.
7.0	.179	11	11	8	8	1 3/4	1 1/4
7.5	.179	11	11	8	8	1 3/4	1 1/4
8.0	.179	11	11	8	8	2	1 1/4
9.0	.179	13	13	10	10	2	1 1/4
10.0	.179	13	13	10	10	2	1 1/4
9.5	.239	13	13	10	10	2	1 1/4
10.0	.239	14	14	11	11	2	1 1/2
11.0	.239	14	14	11	11	3	1 1/2
11.5	.239	14	14	11	11	3	1 1/2

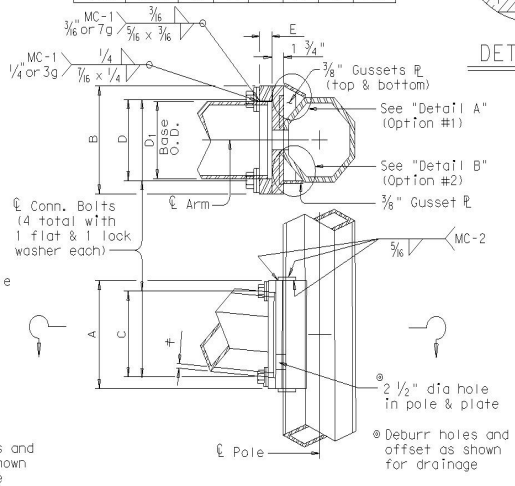

FIXED MOUNT DETAIL 2

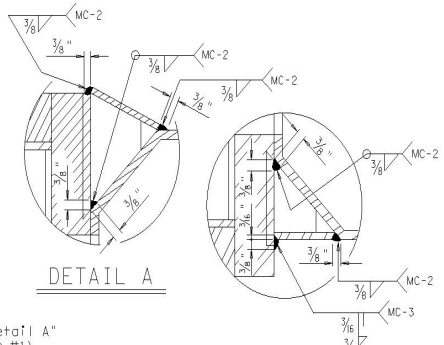

MATERIALS	
Round Shafts or Polygonal Shafts ①	ASTM A595 Gr.A, A588, A1008 HSLAS Gr.50 Class 2, A1011 HSLAS Gr.50 Class 2, A572 Gr.50 or A1011 SS Gr.50 ②
Plates ①	ASTM A36, A588, or A572 Gr.50
Connection Bolts	ASTM A325 or A449, except where noted
Pin Bolts	ASTM A325
Pipe ①	ASTM A53 Gr.B, A501, A1008 HSLAS-F Gr.50, A1011 HSLAS-F Gr.50
Misc. Hardware	Galvanized steel or stainless steel or as noted

① ASTM A572, A1008 HSLAS, A1011 HSLAS, A1008 HSLAS-F, A1011 HSLAS-F or A1011 SS may have higher yield strengths but shall not have less elongation than the grade indicated.

② ASTM A1011 SS Gr.50 material shall also have a minimum elongation of 18 percent in 8 inches or 23 percent in 2 inches. Material thickness in excess of those stipulated under A1011 SS will be acceptable providing the material meets all other A1011 SS requirements and the requirements of this item.

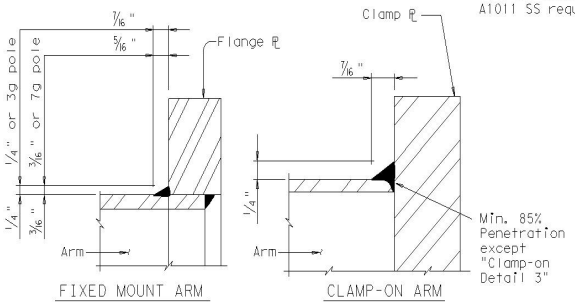

FIXED MOUNT ARM CLAMP-ON ARM

ARM BASE WELD DETAILS

ARM SIZE D_1	#	A	F	CONN. BOLTS No.	CONN. BOLTS Dia	PIN BOLTS No.	PIN BOLTS Dia
in.	in.	in.	in.	ea.	in.	ea.	in.
6.5	.179	12	6	4	1	2	5/8
7.5	.179	14	8	4	1	2	5/8
8.0	.179	14	8	4	1	2	5/8
9.0	.179	16	10	4	1	2	5/8
9.5	.179	18	12	4	1 1/4	3	5/8
9.5	.239	18	12	4	1 1/4	3	5/8
10.0	.239	18	12	4	1 1/4	3	5/8

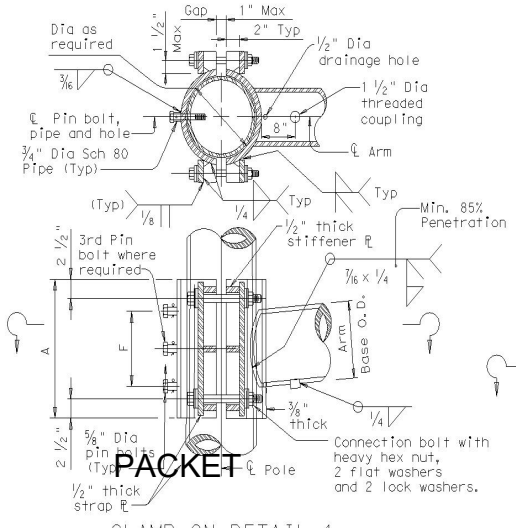

CLAMP-ON DETAIL 1

ARM SIZE D_1	#	A	F	T	CONN. BOLTS No.	CONN. BOLTS Dia	PIN BOLTS No.	PIN BOLTS Dia
in.	in.	in.	in.	in.	ea.	in.	ea.	in.
7.0	.179	12	6	3/4	4	3/4	2	5/8
7.5	.179	14	8	3/4	4	3/4	2	5/8
8.0	.179	14	8	3/4	4	3/4	2	5/8
9.0	.179	16	10	7/8	4	1	2	5/8
10.0	.179	18	10	7/8	4	1	2	5/8
9.5	.239	18	10	1	6	1	3	5/8
10.0	.239	18	10	1	6	1	3	5/8

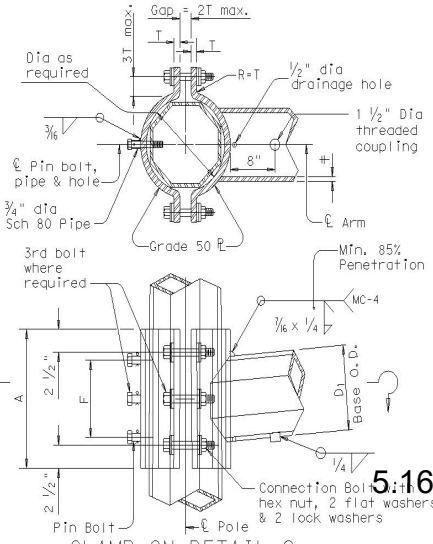

CLAMP-ON DETAIL 2

ARM SIZE D_1	#	A	F	CONN. BOLTS No.	CONN. BOLTS Dia	PIN BOLTS No.	PIN BOLTS Dia
in.	in.	in.	in.	ea.	in.	ea.	in.
6.5	.179	12	6	4	1	2	5/8
7.5	.179	14	8	4	1	2	5/8
8.0	.179	14	8	4	1	2	5/8
9.0	.179	16	10	4	1	2	5/8
9.5	.179	18	12	6	1	3	5/8
9.5	.239	18	12	6	1	3	5/8
10.0	.239	18	12	6	1	3	5/8

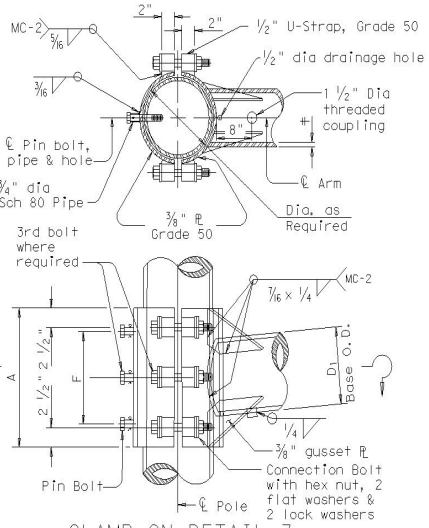

CLAMP-ON DETAIL 3

GENERAL NOTES:

Clamp-on details are used for the second arm on dual mast arm assemblies. A Maximum 1 1/2" wide vertical slotted hole shall be cut in the front clamp plate to facilitate drainage during galvanizing. The slot shall be centered behind the arm and shall be no longer than the arm diameter minus 1"

Fixed mount details are used for single mast arm assemblies and for the first arm on dual mast arm assemblies.

Where duplicate parts occur on a detail, welds shown for one part shall apply to all similar parts on the detail.

Pin bolts are required to prevent rotation of clamp-on arms under design wind forces.

NOTE:

Pin bolts shall be A325 with threads excluded from the shear plane. Pin bolt and 3/4" dia pipe shall have 5/16" dia holes for a 1/8" dia galvanized cotter pin. Back clamp plate shall be furnished with a 3/4" dia hole for each pin bolt. An 11/16" dia hole for each pin bolt shall be field drilled through the pole after arm orientations have been approved by the Engineer.

Texas Department of Transportation
Traffic Operations Division

STANDARD ASSEMBLY FOR TRAFFIC SIGNAL SUPPORT STRUCTURES

MAST ARM CONNECTIONS

MA-C-12

©TxDOT August 1995

DN: MS	CK: JSY	DW: MMF	CK: JSY
REVISIONS	CONT	SECT	JOB	HIGHWAY
5-96	.	.	.	.
5-09				
1-12				
DIST	COUNTY		SHEET NO.
.	.		41

126A

DISCLAIMER: The use of this standard is governed by the "Texas Engineering Practice Act". No warranty of any kind is made by TxDOT for any purpose whatsoever. TxDOT assumes no responsibility for the conversion of this standard to other formats or for incorrect results or damages resulting from its use.

DATE:
FILE:

TABLE OF DIMENSIONS for ILSN Support Arm Clamp-on Details 1, 2 and 3						
ILSN ARM SIZE	A	F	CONN. BOLTS		PIN BOLTS	
			No.	Dia	No.	Dia
3 in. dia Schedule 40 Pipe	in.	in.	ea.	in.	ea.	in.
	10	4	4	¾	2	⅝

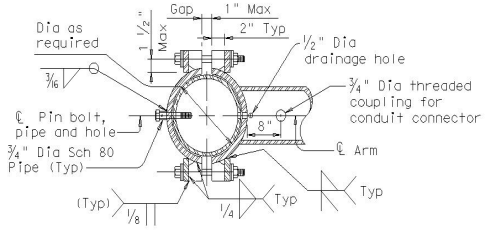

SECTION A-A

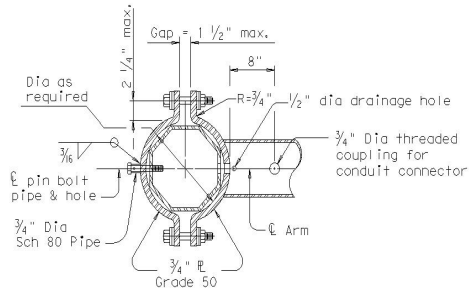

SECTION B-B

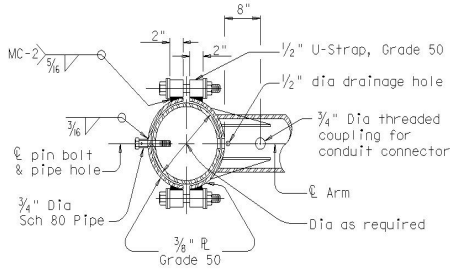

SECTION C-C

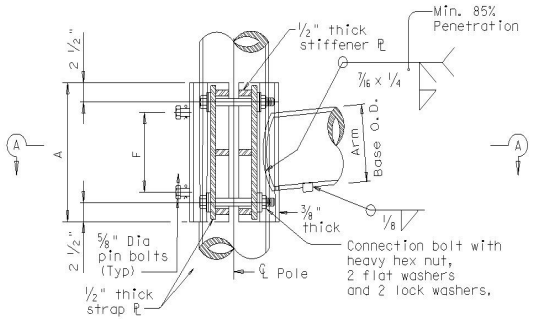

ILSN CLAMP-ON DETAIL 1

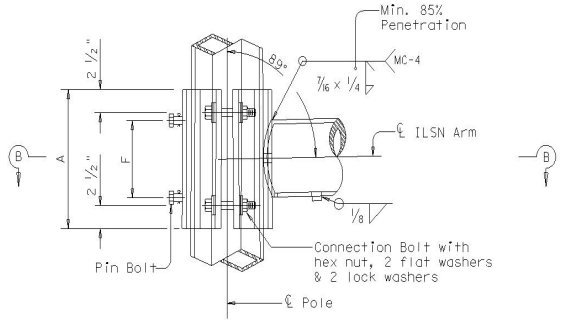

ILSN CLAMP-ON DETAIL 2

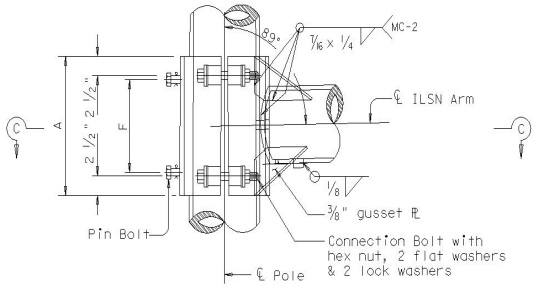

ILSN CLAMP-ON DETAIL 3

GENERAL NOTES:

Clamp-on details shall be used for ILSN support arm assemblies. A 1 ½" inch diameter hole shall be cut in the front clamp plate for wiring access. A matched hole shall be field drilled through the pole to provide wire access after arm is oriented. Deburr both holes.

Where duplicate parts occur on a detail, welds shown for one part shall apply to all similar parts on the details.

Pin bolts are required to prevent rotation of clamp-on arms under design wind forces.

NOTE:

Pin bolts shall be A325 with threads excluded from the shear plane. Pin bolt and ¾" dia pipe shall have 3/16" dia holes for a ⅛" dia galvanized cotter pin. Back clamp plate shall be furnished with a ¾" dia hole for each pin bolt. An 11/16" dia hole for each pin bolt shall be field drilled through the pole after arm orientations have been [illegible] Engineer.

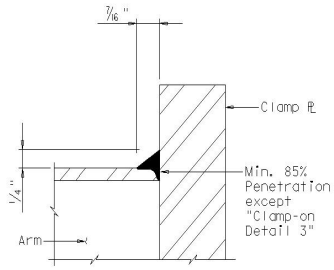

CLAMP-ON ARM

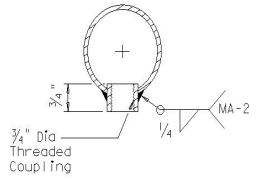

ILSN ARM COUPLING DETAIL

ARM BASE WELD DETAIL C

Texas Department of Transportation
Traffic Operations Division

STANDARD ASSEMBLY FOR TRAFFIC SIGNAL SUPPORT STRUCTURES

MAST-ARM CONNECTIONS

MA-C(ILSN)-12

©TxDOT August 1995

DN: MS	CK: JSY	DN: MMF	CK: JSY
REVISIONS	CONT	SECT	JOB	HIGHWAY
5-96				
1-12				
	DIST	COUNTY		SHEET NO.
				42

126B

DISCLAIMER: The use of this standard is governed by the "Texas Engineering Practice Act". No warranty of any kind is made by TxDOT for any purpose whatsoever. TxDOT assumes no responsibility for the conversion of this standard to other formats or for incorrect results or damages resulting from its use.

DATE:
FILE:

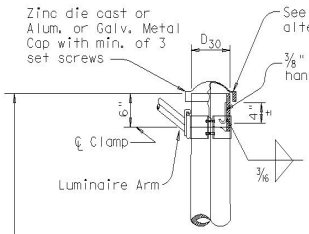

DETAIL A

(for pole with luminaire)

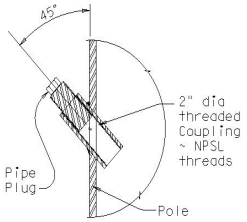

POLE COUPLING DETAIL

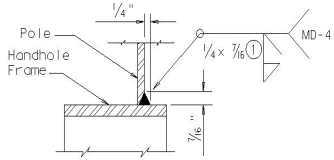

DETAIL G

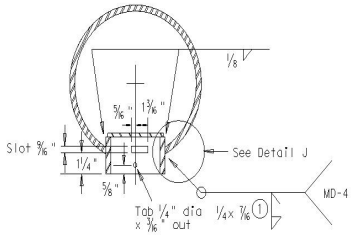

SECTION X-X

Opening for access compartment shall be no more than 1/16 inch wider than the access compartment itself.

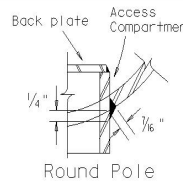

Round Pole

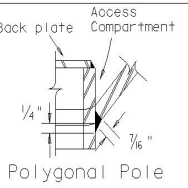

Polygonal Pole

DETAIL J

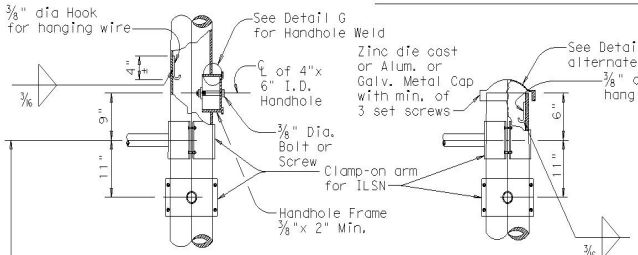

DETAIL B

DETAIL C

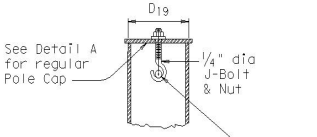

SECTION Y-Y

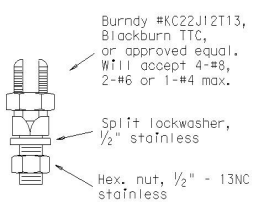

COPPER GROUND CONNECTOR

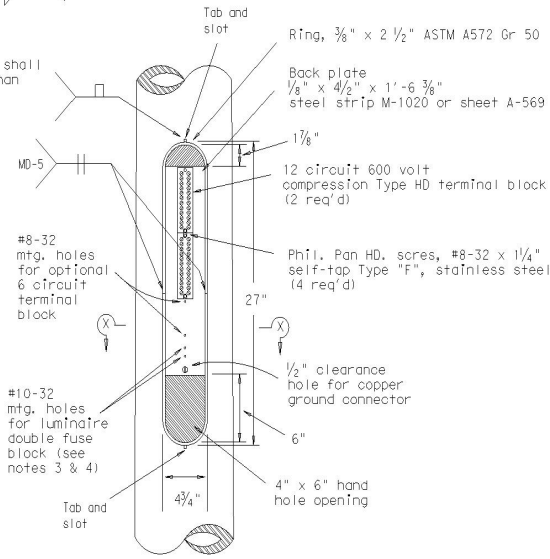

ACCESS COMPARTMENT

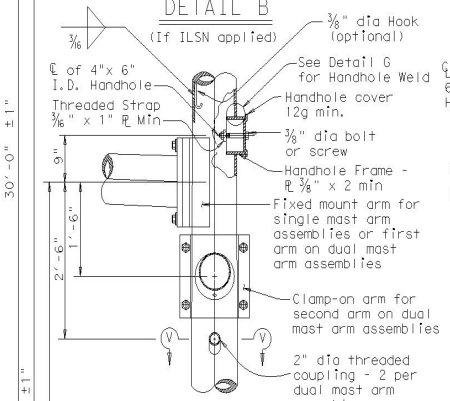

DETAIL D

(for 30' pole with luminaire and ILSN sign)

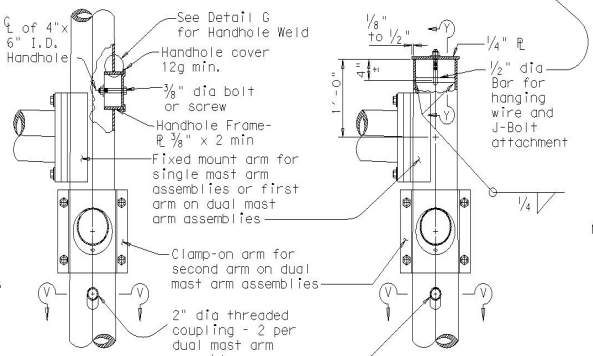

DETAIL E

(for 24' pole with ILSN sign and no luminaire)

DETAIL F

(for 19' pole with no ILSN sign and no luminaire)

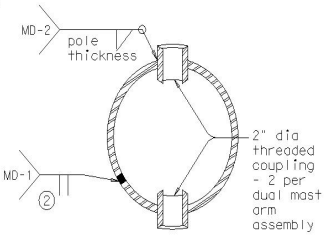

SECTION V-V

NOTES:

1. The cover shall be one piece formed from ABS plastic, shall be a pearl gray color, and shall be suitable for exposure to harsh sunlight and extreme weather. Cover shall latch with two screw latches and shall fit tightly to the enclosure ring to create a rainproof seal. Latch screws shall be 1/4-20 stainless flat socket head screws with tamper proof feature.

2. The pole manufacturer shall provide with each pole a separate kit consisting of: one cover with two latching assemblies, two terminal strips (Marathon #985GP12CU or approved equal), four #8-32 x 1 1/4" self tapping type "F" stainless steel pan head screws, and one ground connector (Blackburn TTC, Burndy KC22J12T13, or Ilsco SSS-5). The traffic signal contractor shall install the kit items in the field.

3. The screw hole spacing on the enclosure back plate shall be for two Marathon #985GP12 terminal strips, one Marathon #985GP06CU terminal strip, and one Bussmann #BM6032B fuse block.

4. Install one Bussmann #BM6032B, Littelfuse #L60030M-2C, or Ferraz-Shawmut #30352 fuse block for poles where luminaires are to be installed.

Anchor Bolt Diameter	Bolt Hole Diameter	Slot Length	Bolt Circle Diameter	Base PL Dim. L x T	Adjust. Range
1 1/2"	1 3/4"	3 1/2"	17"	18" x 1 1/2"	13.4°
1 3/4"	2"	4"	19"	20" x 1 3/4"	13.5°
2"	2 1/4"	4 1/2"	21"	22" x 2"	13.6°
2 1/4"	2 1/2"	5"	23"	24" x 2 1/4"	13.7°

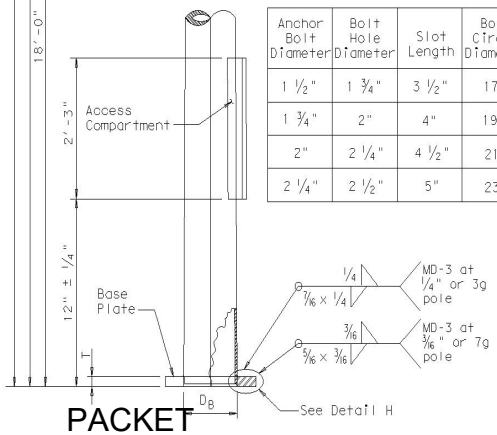

POLE ELEVATION

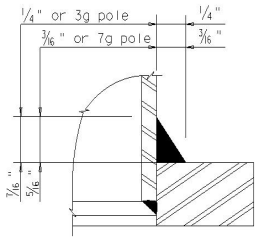

DETAIL H

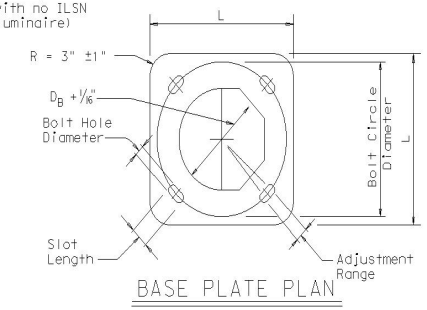

BASE PLATE PLAN

① 85% Min. penetration

② 60% Min. penetration 100% penetration within 6" of circumferential base welds.

Texas Department of Transportation
Traffic Operations Division

TRAFFIC SIGNAL SUPPORT STRUCTURES MAST ARM POLE DETAILS

MA-D-12

© TxDOT August 1995

DN: MS	CK: JSY	DW: FDN	CK: CAL
REVISIONS	CONT	SECT	JOB	HIGHWAY
8-99 1-12				
	DIST	COUNTY		SHEET NO.
				43

127

DISCLAIMER: The use of this standard is governed by the "Texas Engineering Practice Act". No warranty of any kind is made by TxDOT for any purpose whatsoever. TxDOT assumes no responsibility for the conversion of this standard to other formats or for incorrect results or damages resulting from its use.

DATE:
FILE:

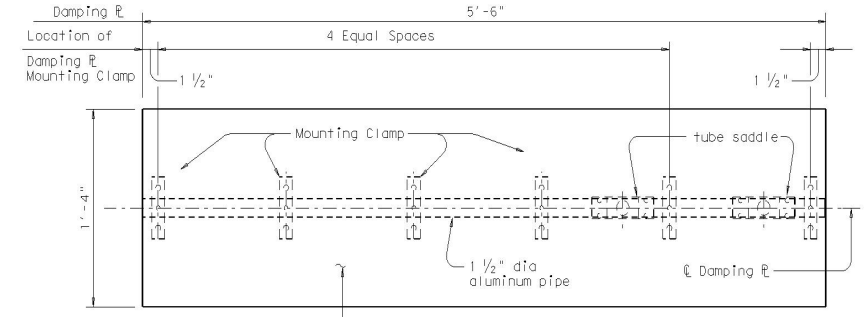

PLAN

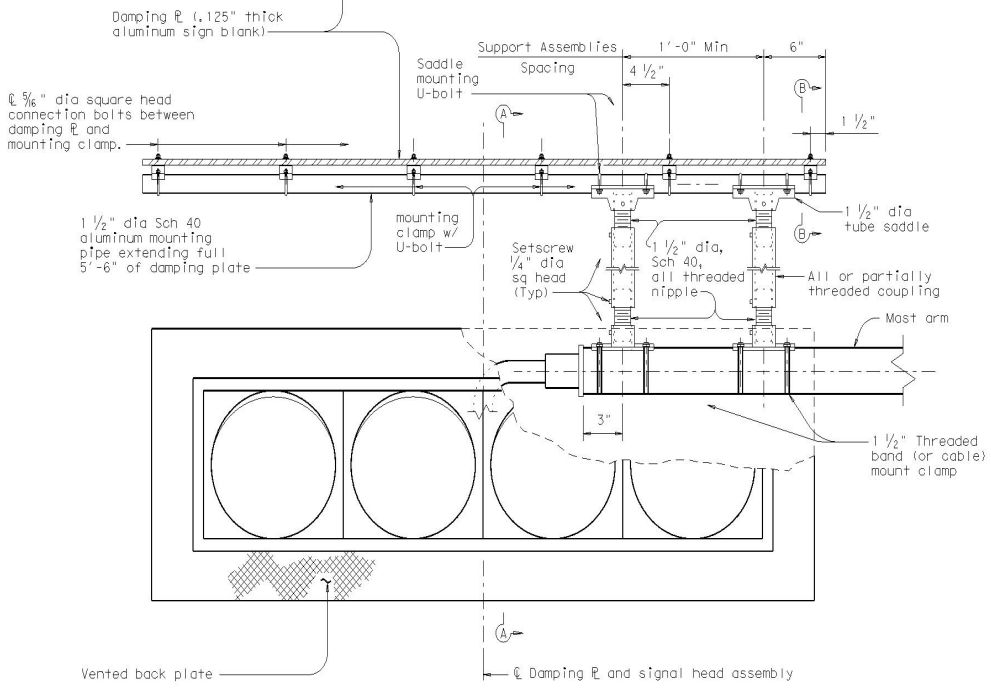

ELEVATION

DAMPING PLATE MOUNTING DETAILS

(Showing alternate placement of signal head)

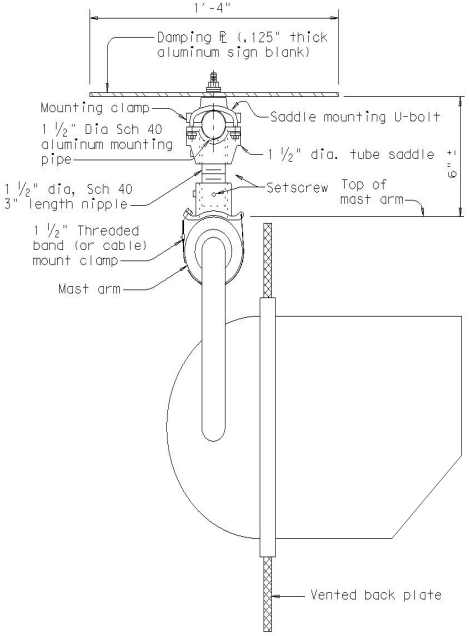

SECTION A-A

(Showing standard placement of signal head)
(Mounting clamp U-bolt is not shown for clarity)

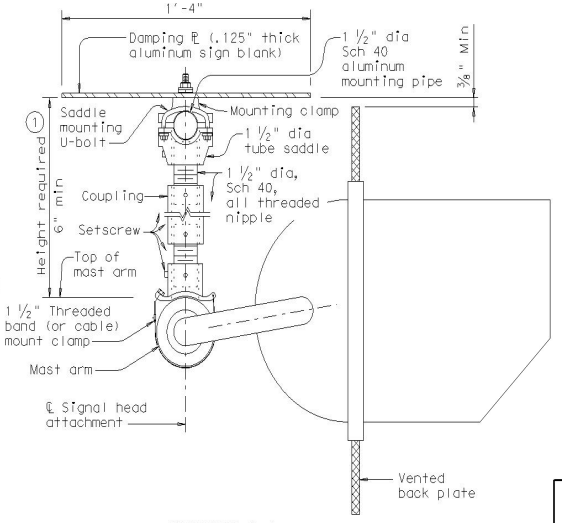

SECTION A-A

(Showing alternate placement of signal head)
(Mounting clamp U-bolt is not shown for clarity)

GENERAL NOTES:

In accordance with the findings of TxDOT sponsored research, the installation of a damping plate in accordance with the details shown here at the end of signal mast arms of SMA and DMA standard structures reduces excessive harmonic vertical vibration, and thus fatigue damage. Any deviation from these details may reduce the effectiveness of this damping device.

Aluminum sign blank for damping plate shall conform to Departmental Material Specifications DMS-7110. Materials for mast arm mounting clamp and tube saddle shall be aluminum castings or aluminum alloys as in accordance with manufacturers' stipulations. Mounting pipe, pipe nipple and coupling shall be aluminum alloy 6061-T6 or 6063-T6. Damping plate mounting clamp and u-bolt assemblies shall conform to Standard sheet SMD(GEN)-08. U-bolts for saddle mounting shall have a minimum yield strength of 36 ksi.

Damping plate shall be mounted horizontally. Position centerline of damping plate to align with centerline of signal head assembly. Vertical clearance between signal head (with or without backing plate) and bottom of damping plate shall be maintained as shown. The attachments shown here are examples only, other supporting details which meet both alignment and vertical clearance requirements are also acceptable.

Unless stipulated by the manufacturers, all steel parts shall be galvanized finish in accordance with Standard Specification Item 445, "Galvanizing".

Contractor shall verify applicable field dimensions before the installation.

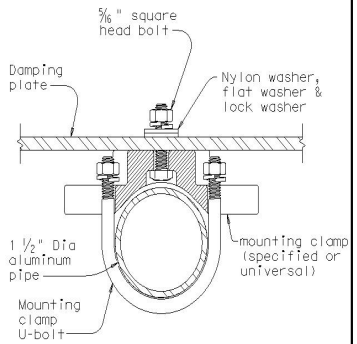

SECTION B-B

(Showing damping plate attachment)

① Recommended supporting assemblies to achieve required height			
Height required	One nipple each length	Two nipples each length plus	One coupling each length
6"-6 ¾"	3"	-	-
7"-8 ½"	4"	-	-
9"-10 ½"	6"	-	-
11"-15 ½"	-	4"	5"
16"-24"	-	6"	10"

© TxDOT January 2012

Texas Department of Transportation
Traffic Operations Division

MAST ARM DAMPING PLATE DETAILS

MA-DPD-12

REVISIONS	DN: JSY	CK: ARG	DW: TCG	CK: JSY
	CONT	SECT	JOB	HIGHWAY
	DIST	COUNTY		SHEET NO.
				44

133

DISCLAIMER: The use of this standard is governed by the "Texas Engineering Practice Act". No warranty of any kind is made by TxDOT for any purpose whatsoever. TxDOT assumes no responsibility for the conversion of this standard to other formats or for incorrect results or damages resulting from its use.

DATE:
FILE:

MATERIALS	
Pole or Arm Simplex	ASTM A27 Gr.65-35 or A148 Gr.80-50, A576 Gr.1021 ③, or A36 (Arm only)
Arm Pipes	ASTM A53 Gr.B, A501, A1008 HSLAS-F Gr.50 ④, or A1011 HSLAS-F Gr.50 ④
Arm Strut Plates ②	ASTM A36, A572 Gr.50 ④, or A588
Misc.	ASTM designations as noted

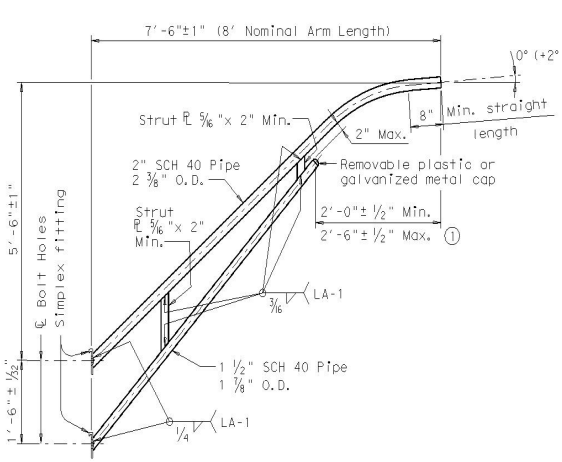

8-FOOT LUMINAIRE ARM

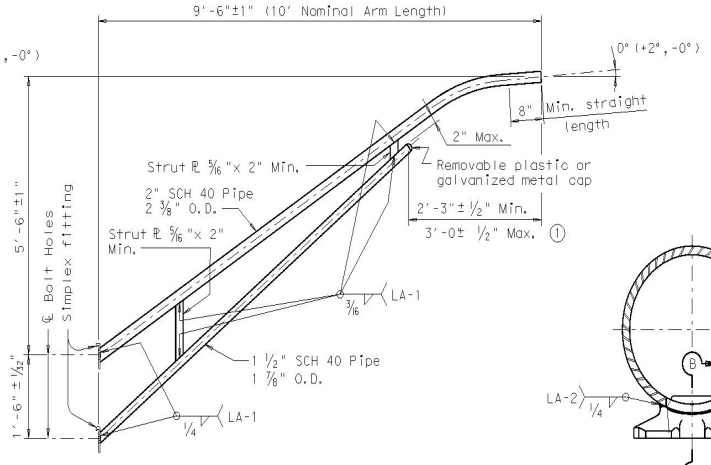

10-FOOT LUMINAIRE ARM

DIRECT ATTACHMENT DETAIL

① Dimensional limits are given to show acceptable variation in design. All of a Fabricator's production of a particular arm length shall have the same dimensions within specified tolerances.

② Any of the materials listed for plates may be used where the drawings do not specify a particular ASTM designation.

③ A576 must be suitable for forging and also meet minimum tensile strength of 65 ksi, minimum yield of 35 ksi, and elongation in 2 inches of 22 percent.

④ ASTM A572, A1008 HSLAS-F, and A1011 HSLAS-F may have higher yield strengths but shall not have less elongation than the grade indicated.

GENERAL NOTES:

Design conforms to 1994 AASHTO Standard Specifications for Structural Supports for Highway Signs, Luminaires, and Traffic Signals and Interim Revisions thereto. Design Wind Speed equals 90 mph plus a 1.3 gust factor. Arms are designed to support a 60 lb. luminaire having an effective projected area (actual area times drag coefficient) of 1.6 sq. ft.

Materials and fabrication shall be in accordance with Item 686, "Traffic Signal Pole Assemblies (Steel)" and with the details, dimensions, and weld procedures shown herein. Weld references call for preapproved weld procedures which the Fabricator must obtain prior to fabrication. In the absense of specified Fabricaton tolerances, dimensions shall be within the tolerances generally obtainable in normal fabrication practice.

Unless otherwise noted, all parts shall be galvanized after fabrication in accordance with Item 445, "Galvanizing".

Deviation from the details and dimensions shown herein require submission of shop drawings in accordance with Item 441, "Steel Structures". Alternate designs are not acceptable.

Each pole simplex fitting shall be supplied with 2 ASTM A325 bolts and 2 lock washers of the size specified. The bolts and lock washers shall be secured to the pole with the other hardware items called for in the plans. When clamp attachment is specified, the Fabricator shall ship the clamp assembly securely attached to the pole at the location shown on the plans.

If clamp assemblies are ordered without poles, the Fabricator shall ship one upper and one lower clamp assembly together in a single package, including all nuts and washers required for the clamps and simplex fittings.

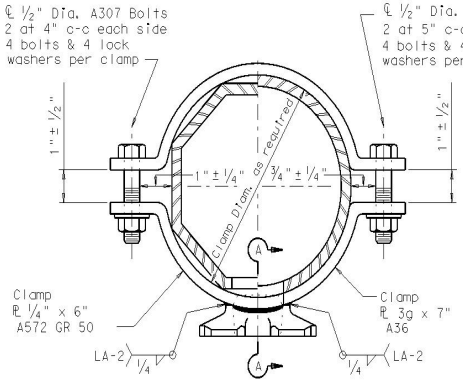

CLAMP ATTACHMENT DETAIL NO. 1 (HALF SECTION)

CLAMP ATTACHMENT DETAIL NO. 2 (HALF SECTION)

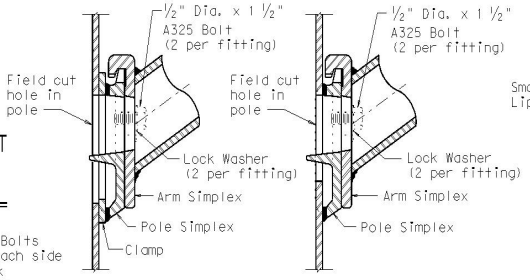

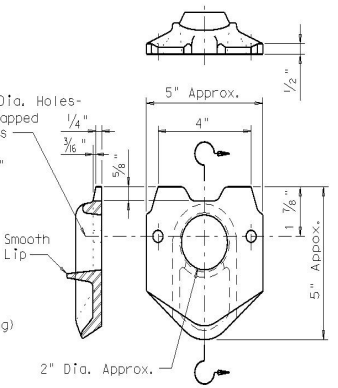

POLE SIMPLEX DETAIL

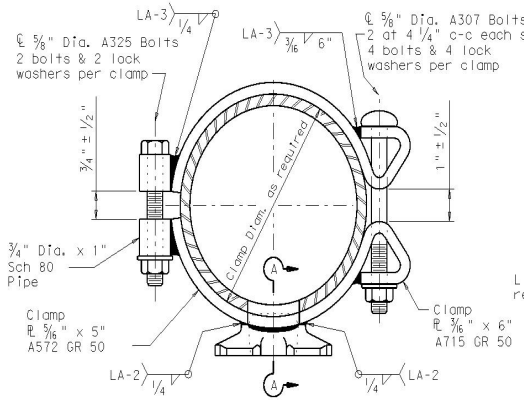

CLAMP ATTACHMENT DETAIL NO. 3 (HALF SECTION)

CLAMP ATTACHMENT DETAIL NO. 4 (HALF SECTION)

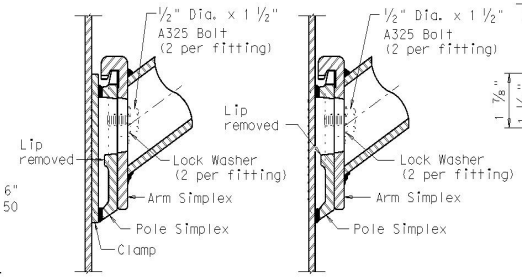

SECTON A-A

SECTON B-B

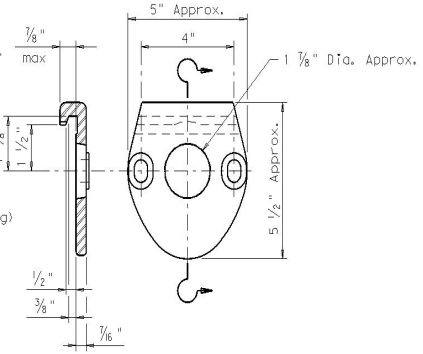

ARM SIMPLEX DETAIL

Texas Department of Transportation
Traffic Operations Division

STANDARD ASSEMBLY DRAWINGS FOR LUMINAIRE SUPPORT STRUCTURES

ARM DETAILS

LUM-A-12

©TxDOT August 1995

DN: LEH	CK: JSY	DW: LTT	CK: TEB

REVISIONS	CONT	SECT	JOB	HIGHWAY
5-96				
1-99				
1-12				
	DIST	COUNTY		SHEET NO.
				45

129

PACKET 5.169 July 11, 2023

DISCLAIMER: The use of this standard is governed by the "Texas Engineering Practice Act". No warranty of any kind is made by TxDOT for any purpose whatsoever. TxDOT assumes no responsibility for the conversion of this standard to other formats or for incorrect results or damages resulting from its use.

DATE:
FILE:

FOUNDATION DESIGN TABLE

FDN TYPE	DRILLED SHAFT DIA	REINFORCING STEEL		EMBEDDED DRILLED SHAFT LENGTH-ft (4), (5), (6)			ANCHOR BOLT DESIGN (1)				FOUNDATION DESIGN LOAD (2)		TYPICAL APPLICATION
		VERT BARS	SPIRAL & PITCH	TEXAS CONE PENETROMETER N blows/ft			ANCHOR BOLT DIA	Fy (ksi)	BOLT CIR DIA	ANCHOR TYPE	MOMENT K-ft	SHEAR Kips	
				10	15	40							
24-A	24"	4- #5	#2 at 12"	5.7	5.3	4.5	¾"	36	12 ¾"	1	10	1	Pedestal pole, pedestal mounted controller.
30-A	30"	8- #9	#3 at 6"	11.3	10.3	8.0	1 ½"	55	17"	2	87	3	Mast arm assembly. (see Selection Table)
36-A	36"	10- #9	#3 at 6"	13.2	12.0	9.4	1 ¾"	55	19"	2	131	5	Mast arm assembly. (see Selection Table) 30' strain pole with or without luminaire.
36-B	36"	12- #9	#3 at 6"	15.2	13.6	10.4	2"	55	21"	2	190	7	Mast arm assembly. (see Selection Table) Strain pole taller than 30' & strain pole with mast arm
42-A	42"	14- #9	#3 at 6"	17.4	15.6	11.9	2 ¼"	55	23"	2	271	9	Mast arm assembly. (see Selection Table)

FOUNDATION SELECTION TABLE FOR STANDARD MAST ARM PLUS ILSN SUPPORT ASSEMBLIES (ft)

		FDN 30-A	FDN 36-A	FDN 36-B	FDN 42-A
80 MPH DESIGN WIND SPEED	MAX SINGLE ARM LENGTH	32'	48'		
	MAXIMUM DOUBLE ARM LENGTH COMBINATIONS	24' X 24'			
		28' X 28'			
		32' X 28'	32' X 32'		
			36' X 36'		
			40' X 36'		
			44' X 28'	44' X 36'	
100 MPH DESIGN WIND SPEED	MAX SINGLE ARM LENGTH		36'	44'	
	MAXIMUM DOUBLE ARM LENGTH COMBINATIONS		24' X 24'		
			28' X 28'		
			32' X 24'	32' X 32'	
				36' X 36'	
				40' x24'	40' X 36'
					44' x 36'

EXAMPLE:
1. For 80mph design wind speed, foundation 30-A can support up to a 32' arm with another arm up to 28'
2. For 100mph design wind speed, foundation 36-A can support a single 36' mast arm.

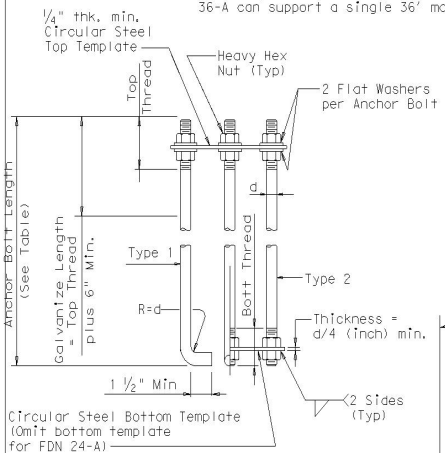

HOOKED ANCHOR (TYPE 1) NUT ANCHOR (TYPE 2)

ANCHOR BOLT ASSEMBLY

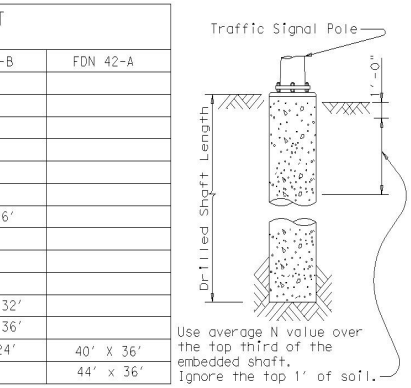

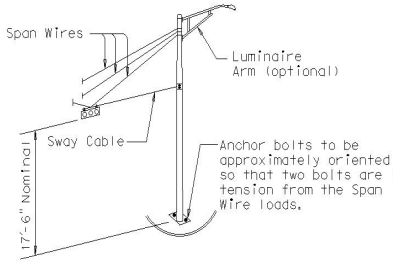

TYPICAL STRAIN POLE ASSEMBLY

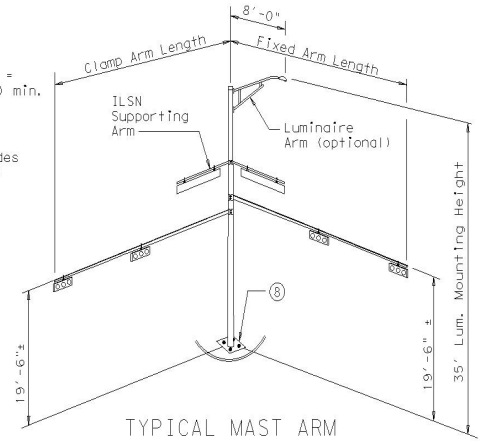

⑧ Orient anchor bolts orthogonal with the fixed arm direction to ensure that two bolts are in tension under dead load.

TYPICAL MAST ARM ASSEMBLY

NOTES:

(1) Anchor bolt design develops the foundation capacity given under Foundation Design Loads.

(2) Foundation Design Loads are the allowable moments and shears at the base of the structure.

(3) Foundations may be listed separately or grouped according to similarity of location and type. Quantities are for the Contractor's information only.

(4) Field Penetrometer readings at a depth of approximately 3 to 5 feet may be used to adjust shaft lengths.

(5) If rock is encountered, the Drilled Shaft shall extend a minimum of two diameters into solid rock.

(6) Decimal lengths in Design Table are to allow interpolation for other penetrometer values. Round to nearest foot for entry into Summary Table.

ANCHOR BOLT & TEMPLATE SIZES

BOLT DIA IN.	(7) BOLT LENGTH	TOP THREAD	BOTTOM THREAD	BOLT CIRCLE	R2	R1
¾"	1'-6"	3"	—	12 ¾"	7 ⅛"	5 ⅝"
1 ½"	3'-4"	6"	4"	17"	10"	7"
1 ¾"	3'-10"	7"	4 ½"	19"	11 ¼"	7 ¾"
2"	4'-3"	8"	5"	21"	12 ½"	8 ½"
2 ¼"	4'-9"	9"	5 ½"	23"	13 ¾"	9 ¼"

(7) Min dimensions given, longer bolts are acceptable.

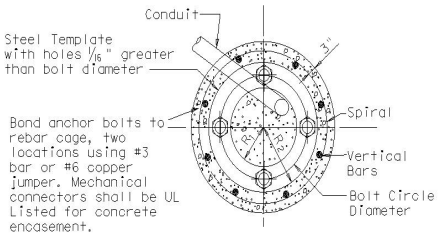

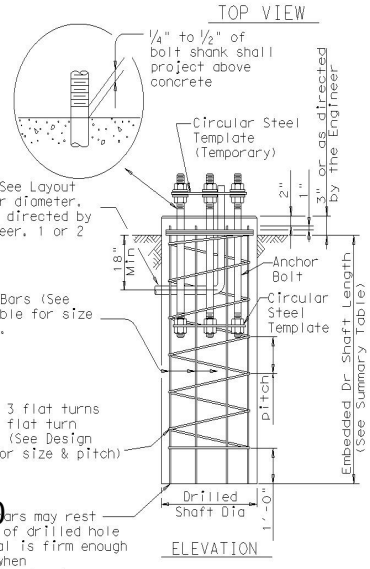

ELEVATION

FOUNDATION DETAILS

FOUNDATION SUMMARY TABLE (3)

LOCATION IDENTIFICATION	AVG. N BLOW /ft.	FDN TYPE	NO. EA	DRILLED SHAFT LENGTH (6) (FEET)				
				24-A	30-A	36-A	36-B	42-A
BIG SPRING ST & LONE STAR LN	10	24-A	2	12				
	10	36-A	2			26		
TOTAL DRILLED SHAFT LENGTHS				12		26		

GENERAL NOTES:

Design conforms to 1994 AASHTO Standard Specifications for Structural Supports for Highway Signs, Luminaires and Traffic Signals and interim revisions thereto.

Reinforcing steel shall conform to Item 440, "Reinforcing Steel".

Concrete shall be Class "C".

Threads for anchor bolts and nuts shall be rolled or cut threads of 8UN series up to 2" in diameter or UNC series for all sizes. Bolts and nuts shall have Class 2A and 2B fit tolerances. Galvanized nuts shall be tapped after galvanizing.

Anchor bolts that are larger than 1" in diameter shall conform to "alloy steel" or "medium-strength mild steel" per Item 449, "Anchor Bolts". Anchor bolts that are 1" in diameter or less shall conform to ASTM A36. Galvanize a minimum of the top end thread length plus 6" for all anchor bolts unless otherwise noted. Exposed washers and exposed nuts shall be galvanized. All galvanizing shall be in accordance with Item 445, "Galvanizing".

Templates and embedded nuts need not be galvanized. Lubricate and tighten anchor bolts when erecting the structure in accordance with Item 449, "Anchor Bolts".

1/25/2023
STATE OF TEXAS
THOMAS W HARTMANN
109948
LICENSED
PROFESSIONAL ENGINEER

Texas Department of Transportation
Traffic Operations Division

TRAFFIC SIGNAL POLE FOUNDATION

TS-FD-12

©TxDOT August 1995

REVISIONS	DN: MS	CK: JSY	DW: MAQ/MMF	CK: JSY/TEH
5-96	CONT	SECT	JOB	HIGHWAY
17-99				
1-12	DIST	COUNTY		SHEET NO.
				46

128

DISCLAIMER
The use of this standard is governed by the "Texas Engineering Practice Act". No warranty of any kind is made by TxDOT for any purpose whatsoever. TxDOT assumes no responsibility for the conversion of this standard to other formats or for incorrect results or damages resulting from its use.

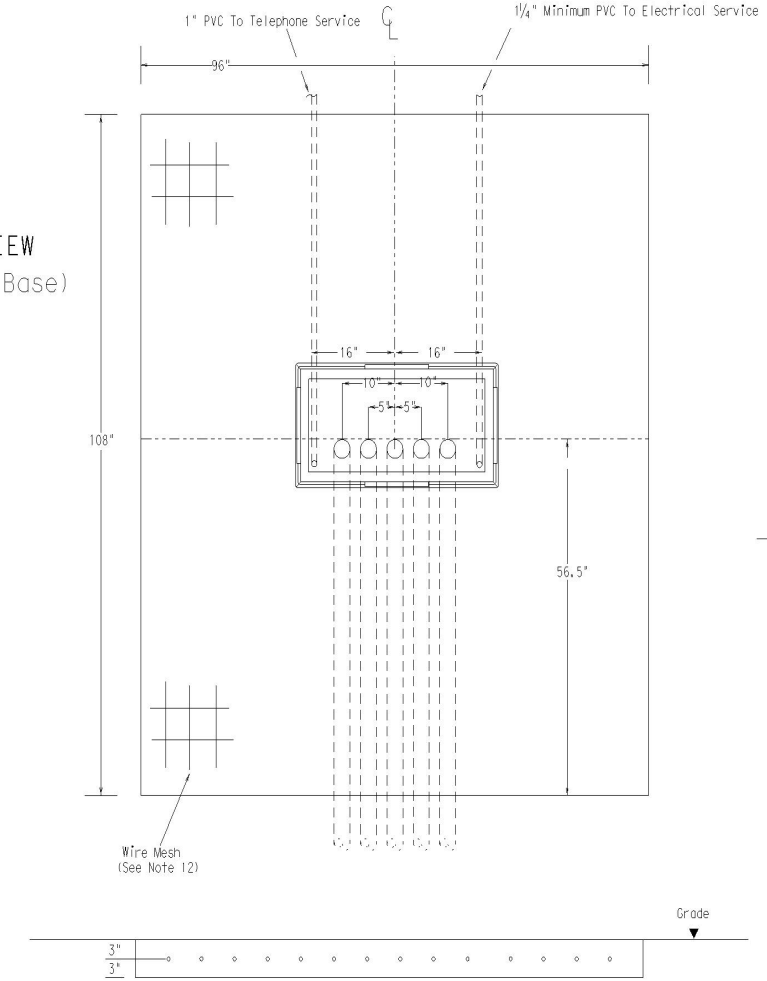

TOP VIEW
(Slab & Base)

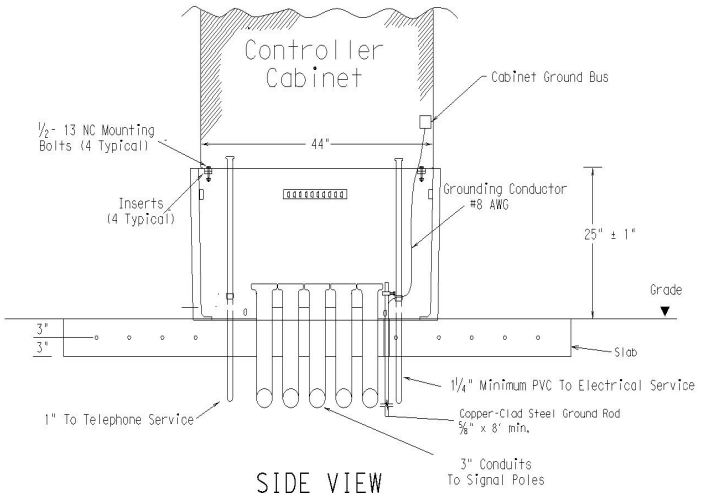

SIDE VIEW
(Slab & Base)

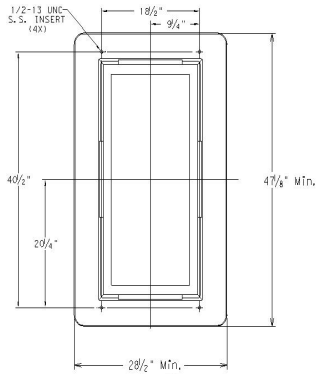

CABINET BASE

TRAFFIC SIGNAL CONTROLLER BASE:

1. Provide a traffic signal controller base (cabinet base) manufactured of polymer concrete material consisting of calcareous and siliceous stone; glass fibers and thermoset polyester resin. The polymer concrete cabinet base must be reinforced on the inside of the cabinet base with fiberglass matting. Provide one of the following bases: Armorcast Part # A6001848X24, Quazite Model # PG3048BT34, or other as approved by TxDOT Traffic Operation Division.
2. The polymer concrete material must have a minimum compressive strength of 10,300 pounds per square inch (psi), minimum flexural strength of 3600 psi, and minimum shear strength of 3600 psi.
3. The polymer concrete cabinet base must conform to the dimensions shown and must accommodate a standard TxDOT basemount cabinet.
4. Supply the cabinet base with four ½"-13 UNC stainless steel inserts for attachment of the cabinet to the base. Inserts must withstand a minimum torque of 50 ft-lb and a minimum straight pull out strength of 750 lbs.
5. Provide the cabinet base with 4 cable racks mounted one on each side of the base 2" to 7 " from the top edge of the base. Unless approved otherwise, cable racks must be 1-1/2 x ⅜ x ⅜ inch steel channel with eight T-slots spaced at 1-1/2 inches. The cable racks must easily accommodate the insertion of tie wraps to attach field wiring to the racks to serve as strain relief. Secure cable racks to the base using ½"-13 UNC stainless steel screws and inserts.
6. The cabinet base, when secured to the concrete slab with controller cabinet attached, must withstand a minimum wind load of 125 mph or a 850 lb force applied at 49" above the bottom of the base without causing the base or cabinet to come out of their anchored position or cause any permanent deformation. The manufacturer must supply certification by an independent testing laboratory or sealed by a Texas Licensed Professional Engineer. Provide the cabinet base with hardware for attachment to a concrete slab.
7. The traffic signal base must be permanently marked either by impress or by permanent ink with the manufacturer's model number and name or logo.
8. Seal the base to the concrete with a silicone caulk bead and fastened to the slab per manufacturer's recommendations.

CONCRETE SLAB:

9. Traffic signal controller pad must be a portland cement concrete slab poured in place, must conform to the dimensions shown, and must be level.
10. Bond a #8 AWG copper ground wire and an 8 ft ground rod bonded to the reinforcing mesh by a suitable UL Listed clamp and terminated to the cabinet grounding bus for the purpose of providing a local ground for the electrical grounding conductor. The electrical grounding conductor specified in Item 680-3.A.4 is required and must be terminated to the cabinet ground bus.
11. Install a PVC sleeve to prevent the ground rod from direct embedment in the slab.
12. Provide welded wire mesh 6X6-W2.9 X W2.9 for reinforcement. Provide joints and splices in the mesh with a minimum 6-inch overlap. Center the mesh between top and bottom and provide a minimum 3 inch cover on the edges.
13. Provide Class B concrete minimum for the slab in accordance with Item 421. Construct the slab in accordance with Item 531.

CONDUITS:

14. Stub up and run 3-inch conduits through the slab to the various traffic signal poles and ground boxes as shown on the layouts. Install the number of conduits as shown on layouts plus two additional 3 inch conduits for future use. Terminate the conduits with a bushing between 2 and 4-inches above the slab.
15. Extend conduits for future use at least 18-inches from the edge of the slab, terminate underground with a coupling, and cap and seal so that the seal can be removed without damaging the coupling. This must also apply to unused telephone conduit.
16. Stub up two separate conduits through the slab from the electrical and telephone services. Run the conduit for the electrical feed directly to the electrical service enclosure. Run the conduit for the telephone line directly to the telephone service, usually located on the same pole as the electrical service. Telephone must not under any circumstance share a conduit with any other function.
17. Terminate electric and telephone conduits above the slab with a coupling. After the base is installed, extend the conduits above the top of the base and secure to the base using a steel one-hole strap or similar suitable substitute.

CONTROLLER CABINET:

18. Anchor the controller cabinet to the base using four stainless steel 1/2-13 NC bolts.
19. The silicone caulk bead specified in Item 680.3.B must be RTV 133.

PAYMENT:

20. Bid TS-CF as subsidiary to Item 680.

PACKET 5.171 July 11, 2023

STANDARD PLANS
Texas Department of Transportation
Traffic Operations Division

TRAFFIC SIGNAL CONTROLLER CABINET BASE AND PAD

TS-CF-04

©TxDOT October 2000

DN-	CK-	DW-	CK-

REVISIONS	STATE DISTRICT	FEDERAL REGION	FEDERAL AID PROJECT	SHEET
12-04	6			47

COUNTY	CONTROL	SECTION	JOB	HIGHWAY

DISCLAIMER:
The use of this standard is governed by the "Texas Engineering Practice Act". No warranty of any kind is made by TxDOT for any purpose whatsoever. TxDOT assumes no responsibility for the conversion of this standard to other formats or for incorrect results or damages resulting from its use.

DATE:
FILE:

GENERAL NOTES FOR ALL ELECTRICAL WORK

1. The location of all conduits, junction boxes, ground boxes, and electrical services is diagrammatic and may be shifted to accommodate field conditions.

2. Provide new and unused materials. Ensure that all materials and installations comply with the applicable articles of the National Electrical Code (NEC), TxDOT standards and specifications, National Electrical Manufacturers Association (NEMA), and are listed by Underwriters Laboratories (UL) or a Nationally Recognized Testing Lab (NRTL). NRTLs such as Canadian Standard Association (CSA), Intertek Testing Services NA Inc., or FM Approvals LLC can be considered equivalent to UL. Where reference is made to NEMA listed devices, International Electrotechnical Commission (IEC) listed devices will not be considered an acceptable equal to a NEMA listed device. Acceptable devices may have both a NEMA and IEC listing. Faulty fabrication or poor workmanship in any material, equipment, or installation is justification for rejection. Replace or reinstall rejected material or equipment at no additional cost to the Department.

3. Miscellaneous nuts, bolts and hardware, except for high strength bolts, may be stainless steel when plans specify galvanized, provided the bolt size is ½ in. or less in diameter.

4. Provide the following test equipment as required by the Engineer to confirm compliance with the contract and the NEC: voltmeter, ammeter, megohm meter (1000 volt DC), ground resistance tester, torque wrenches, and torque screwdrivers. Ensure all equipment has been properly calibrated within the last year. Provide calibration certification to the Engineer upon request. Operate test equipment during inspection as requested by the Engineer.

5. Install grounding as shown on the plans and in accordance with the NEC. Ensure all metallic conduits; metal poles; luminaires; and metal enclosures are bonded to the equipment grounding conductor. Provide stranded bare copper or green insulated grounding conductors. Ground rods, connectors, and bonding jumpers are subsidiary to the various bid items.

6. When required by the Engineer, notify the Department in writing of materials from the Material Producers List (MPL) intended for use on each project. Prequalified materials are listed on the MPL on TxDOT's website under "Roadway Illumination and Electrical Supplies." No substitutions will be allowed for materials on this list.

CONDUIT

A. MATERIALS

1. Provide conduit, junction boxes, fittings, and hardware as per TxDOT Departmental Material Specification (DMS) 11030 "Conduit" and Item 618 "Conduit" of TxDOT's "Standard Specifications For Construction And Maintenance Of Highways, Streets, And Bridges," latest edition. Provide conduits listed under Item 618 on the MPL under "Roadway Illumination and Electrical Supplies." Provide conduit types according to the descriptive code or as shown on the plans. Do not substitute other types of conduits for those shown. Provide liquidtight flexible metal conduit (LFMC) when flexible conduit is called for on galvanized steel rigid metallic conduit (RMC) systems. Provide liquidtight flexible nonmetallic conduit (LFNC) when flexible conduit is called for on polyvinyl chloride (PVC) systems.

2. Provide galvanized steel RMC for all exposed conduits, unless otherwise shown on the plans. Properly bond all metal conduits.

3. Unless otherwise shown on the plans, provide junction boxes with a minimum size as shown in the following table, which applies to the greatest number of conductors entering the box through one conduit with no more than four conduits per box. When a mixture of conductor sizes is present, count the conductors as if all are of the larger size. For situations not applicable to the table, size junction boxes in accordance with NEC.

AWG	3 CONDUCTORS	5 CONDUCTORS	7 CONDUCTORS
#1	10" x 10" x 4"	12" x 12" x 4"	16" x 16" x 4"
#2	8" x 8" x 4"	10" x 10" x 4"	12" x 12" x 4"
#4	8" x 8" x 4"	10" x 10" x 4"	10" x 10" x 4"
#6	8" x 8" x 4"	8" x 8" x 4"	10" x 10" x 4"
#8	8" x 8" x 4"	8" x 8" x 4"	8" x 8" x 4"

4. Junction boxes with an internal volume of less than 100 cu. in. and supported by entering raceways must have threaded entries or hubs identified for the intended purpose and supported by connection of two or more rigid metal conduits. Secure conduit within 3 ft. of the enclosure or within 18 in. of the enclosure if all conduit entries are on the same side. Mechanically secure all junction boxes with an internal volume greater than 100 cu. inches.

5. Provide hot dipped galvanized cast iron or sand cast aluminum outlet boxes for junction boxes containing only 10 AWG or 12 AWG conductors. Do not use die cast aluminum boxes. Size outlet boxes according to the NEC.

6. Do not use intermediate metal conduit (IMC) or electrical metallic tubing (EMT) unless specifically required by the plan sheets. When EMT is called for, provide junction boxes made from galvanized steel sheeting, listed and approved for outdoor use, unless otherwise noted on the plans. Size all galvanized steel junction boxes in accordance with the NEC. Provide junction boxes for IMC conduit systems that meet the same requirements for junction boxes used with RMC systems.

7. Provide PVC junction boxes intended for outdoor use on PVC conduit systems, unless otherwise noted on the plans.

8. Provide PVC elbows in PVC conduit systems, unless otherwise shown on the plans. Use only a flat, high tensile strength polyester fiber pull tape for pulling conductors through the PVC conduit system. When galvanized steel RMC elbows are specifically called for in the plans and any portion of the RMC elbow is buried less than 18 in., ground the RMC elbow by means of a grounding bushing on a rigid metal extension. Grounding of the rigid metal elbow is not required if the entire RMC elbow is encased in a minimum of 2 in. of concrete. PVC extensions are allowed on these concrete encased rigid metal elbows. RMC or PVC elbows are subsidiary to various bid items.

9. When required, provide High-Density Polyethylene (HDPE) conduit with factory installed internal conductors according to Item 622 "Duct Cable." At the Contractor's request and with approval by the Engineer, substitute HDPE conduit with no conductors for bored schedule 40 or schedule 80 PVC conduit bid under Item 618. Ensure bored HDPE substituted for PVC is schedule 40 and of the same size PVC called for in the plans. Ensure the substituted HDPE meets the requirements of Item 622, except that the conduit is supplied without factory-installed conductors. Make the transition of the HDPE conduit to PVC (or RMC elbow when required) at the bore pit. Provide conduit of the size and schedule as shown on the plans. Do not extend substituted conduit into ground boxes or foundations. Provide PVC or galvanized steel RMC elbows as called for at all ground boxes and foundations.

10. Use two-hole straps when supporting 2 in. and larger conduits. On electrical service poles, properly sized stainless steel or hot dipped galvanized one-hole standoff straps are allowed on the service riser conduit.

B. CONSTRUCTION METHODS

1. Provide and install expansion joint conduit fittings on all structure-mounted conduits at the structure's expansion joints to allow for movement of the conduit. In addition, provide and install expansion joint fittings on all continuous runs of galvanized steel RMC conduit externally exposed on structures such as bridges at maximum intervals of 150 ft. When requested by the project Engineer, supply manufacturer's specification sheet for expansion joint conduit fittings. Repair or replace expansion joint fittings that do not allow for movement at no additional cost to the Department. Provide the method of determining the amount of expansion to the Engineer upon request. Do not use LFMC or LFNC as a substitute for the required expansion conduit fittings.

2. Space all conduit supports at maximum intervals of 5 ft. Install conduit spacers when attaching metal conduit to surface of concrete structures. See "Conduit Mounting Options" on ED(2). Install conduit support within 3 ft. of all enclosures and conduit terminations.

3. Do not attach conduit supports directly to pre-stressed concrete beams except as shown specifically in the plans or as approved by the Engineer.

4. Unless otherwise shown on the plans, jack or bore conduit placed beneath existing roadways, driveways, sidewalks, or after the base or surfacing operation has begun. Backfill and compact the bore pits below the conduit per Item 476 "Jacking, Boring, or Tunneling Pipe or Box" prior to installing conduit or duct cable to prevent bending of the connections.

5. When placing conduit in the sub-grade of new roadways, backfill all trenches with excavated material unless otherwise noted on the plans. When placing conduit in the sub-base of new roadways, backfill all trenches with cement-stabilized base as per requirements of Items 110 "Excavation", 400 "Excavation and Backfill for Structures", 401 "Flowable Backfill", 402 "Trench Excavation Protection", and 403 "Temporary Special Shoring."

6. Provide and place warning tape approximately 10 in. above all trenched conduit as per Item 618.

7. During construction, temporarily cap or plug open ends of all conduit and raceways immediately after installation to prevent entry of dirt, debris and animals. Temporary caps constructed of durable duct tape are allowed. Tightly fix the tape to the conduit opening. Clean out the conduit and prove it clear in accordance with Item 618 prior to installing any conductors.

8. Ensure conduit entry into the top of any enclosure is waterproof by installing conduit sealing hubs or using boxes with threaded bosses. This includes surface mounted safety switches, meter cans, service enclosures, auxiliary enclosures and junction boxes. Grounding bushings on water tight sealing hubs are not required.

9. Fit the ends of all PVC conduit terminations with bushings or bell end fittings. Provide and install a grounding type bushing on all metal conduit terminations.

10. Install a bonding jumper from each grounding bushing to the nearest ground rod, grounding lug, or equipment grounding conductor. Ensure all bonding jumpers are the same size as the equipment grounding conductor. Bonding of conduit used as a casing under roadways for duct cable is not required, if the duct extends the full length through the casing.

11. At all electrical services, install a 6 AWG solid copper grounding electrode conductor.

12. Place conduits entering ground boxes so that the conduit openings are between 3 in. and 6 in. from the bottom of the box. See the ground box detail on sheet ED(4).

13. Seal ends of all conduits with duct seal, expandable foam, or by other methods approved by the Engineer. Seal conduit immediately after completion of conductor installation and pull tests. Do not use duct tape as a permanent conduit sealant. Do not use silicone caulk as a conduit sealant.

14. File smooth the cut ends of all mounting strut and conduit. Before installing, paint the field cut ends of all mounting strut and RMC (threaded or non-threaded) with zinc rich paint (94% or more zinc content) to alleviate overspray. Use zinc rich paint to touch up galvanized material as allowed in Item 445 "Galvanizing." Do not paint non-galvanized material with a zinc rich paint as an alternative for materials required to be galvanized.

Texas Department of Transportation | Traffic Operations Division Standard

ELECTRICAL DETAILS
CONDUITS & NOTES

ED(1)-14

FILE:	ed1-14.dgn	DN: .	CK: .	DW: .	CK: .
©TxDOT	October 2014	CONT	SECT	JOB	HIGHWAY
	REVISIONS	.	.	.	.
		DIST	COUNTY		SHEET NO.
		.	.		48

71A

PACKET 5.172 July 11, 2023

DISCLAIMER:
The use of this standard is governed by the "Texas Engineering Practice Act". No warranty of any kind is made by TxDOT for any purpose whatsoever. TxDOT assumes no responsibility for the conversion of this standard to other formats or for incorrect results or damages resulting from its use.

DATE:
FILE:

ELECTRICAL CONDUCTORS

A. MATERIAL INFORMATION

1. Provide Type XHHW insulated conductors in accordance with Departmental Material Specification (DMS)11040 "Conductors" and Item 620 "Electrical Conductors." Provide conductors as listed on the Material Producers List (MPL) on the Department web site under "Roadway Illumination and Electrical Supplies" Item 620. Color code insulated conductors in conformance with the NEC. Identify grounded (neutral) conductors with white insulation. Identify grounding conductors (ground wires) with green insulation or bare conductors. Identify ungrounded (hot) conductors with any color insulation except green, white, or gray. Keep color scheme consistent throughout the wiring system. Identify conductors 6 American Wire Gauge (AWG) and smaller by continuous color jacket. Identify electrical conductors 4 AWG and larger by continuous color jacket or by colored tape. When identifying conductors with colored tape, mark at least 6 in. of the conductor's insulation with half laps of tape.

2. Provide a solid copper 6 AWG grounding electrode conductor to bond the electrical service equipment to the concrete encased grounding electrode or the ground rod at the service location. Connect the grounding electrode conductor to the ground rod with a UL listed connector in accordance with DMS 11040. Connect the grounding electrode conductor to the concrete encased grounding electrode as shown in the plans.

3. Where two or more circuits are present in one conduit or enclosure, permanently identify the conductors of each branch circuit by attaching a non-metallic tag around both circuit conductors at each accessible location. Provide tags with two straps, large enough to indicate circuit number, letter, or other identification as shown in the plans. Print circuit identification on the tag with a permanent marker.

4. Use listed compression or screw type pressure connectors, terminal blocks, or split bolt connectors for splicing as specified in DMS 11040. Use hot melt adhesive tape to fill the gap and seal the ends of heat shrink tubing. Provide UL listed gel-filled insulating splice covers. Splicing materials, insulating materials, breakaway disconnects, splice covers, and fuse holders are subsidiary to various bid items.

B. CONSTRUCTION METHODS

1. Use only a flat, high tensile strength polyester fiber pull tape for pulling conductors through the conduit system. After installing conductors in conduit, perform conductor pull test. If a conductor cannot be freely pulled, make any needed alterations or repairs at no additional cost to the department. Perform insulation resistance tests in accordance with Item 620. Coordinate with the Engineer to witness the tests.

2. Leave 2 ft. minimum, 3 ft. maximum length for each conductor up to the splice in ground boxes. Leave 3 ft. minimum, 4 ft. maximum length of conductor in ground boxes when pulled through with no splice. Leave 1 ft. minimum, 1.5 ft. maximum length of conductor at enclosures, weatherheads and pole bases.

3. Make splices only in junction boxes, ground boxes, pole bases, or electrical enclosures and use only listed compression or screw type pressure connectors, terminal blocks, or split bolt connectors. Insulate splices with heavy wall heat shrink tubing or gel-filled insulating splice covers to provide a watertight splice. Overlap conductor insulation with heat shrink tubing a minimum of 2 in. past both sides of the splice. Where heat shrink tubing may not shrink sufficiently to provide a watertight seal around the individual conductors, prior to heating the tubing, increase the diameter of the conductor insulation using hot melt adhesive tape to provide a watertight seal between the individual conductors and the heat shrink tubing. Ensure the tape extends past the heat shrink tubing. Use hot melt adhesive tape to fill the gap and seal the ends of heat shrink tubing. Heat shrink tubing that appears to have been burned, or overheated, is considered defective and must be replaced.

4. Size and install gel-filled insulating splice covers according to manufacturer's specifications when used in place of heat shrink tubing.

5. Wire nuts with factory applied waterproof sealant may be used for 8 AWG or smaller conductors in above ground junction boxes, but not in pole bases or ground boxes. Install wire nuts in an upright position to prevent the accumulation of water.

6. Support conductors in illumination poles with a J-hook at the top of the pole.

7. When terminating conductors, remove the insulation and jacketing material without nicking the individual strands of the conductor. Conductors with nicked individual conductor strands or removed strands will be considered damaged.

8. Replace conductors and cables that are damaged beyond repair or that fail an insulation resistance test at no additional cost to the department.

9. Do not repair damaged conductors with duct tape, electrical tape, or wire nuts. Use only approved splicing methods.

10. Do not terminate more than one conductor under a single connector, unless the connector is rated for multiple conductors. Do not exceed the pressure connector's listing for maximum number and size of conductors allowed.

11. Install breakaway connectors on conductors bid under Item 620 whenever those conductors pass through a breakaway support device. Follow manufacturer's instructions when terminating conductors to breakaway connectors. Properly torque threaded connections. Proper terminations are critical to the safe operation of breakaway devices. Fit the waterproofing boots on breakaway connectors to fit snugly around the conductor to ensure waterproof connection. Only one conductor may enter a single opening in a boot. Provide waterproof boots with the correct number of openings. Leave unused openings factory sealed. Use prequalified breakaway connectors as shown on the MPL.

12. Provide and install a separate stranded equipment grounding conductor (EGC) in all conduits that contain circuit wiring of 50 volts or more. Unless shown elsewhere, size the EGC to be the same size as the largest current carrying conductor contained in the conduit. Ensure all EGCs are bonded together at every accessible location. For traffic signal installations, provide a minimum size 8 AWG EGC. The EGC is paid for under Item 620.

C. TEMPORARY WIRING

1. Install temporary conductors and electrical equipment in accordance with the NEC article "Temporary Installations" and Department standard sheets.

2. Provide a ground fault circuit interrupter (GFCI) for power outlets for portable electrical equipment, power tools, ice machines, ice storage bins and refrigerators located outdoors at grade. GFCI may be any one of the following: molded cord and plug set, receptacle, or circuit breaker type.

3. Use listed wire nuts with factory applied sealant for temporary wiring where approved.

4. Enclose conductor splices within a listed enclosure or ground box, or ensure the splices are more than 10 ft. above grade vertically and more than 5 ft. horizontally from any metal structure. Where installing temporary conductors in areas subject to vehicle traffic or mobile construction equipment, ensure the vertical clearance to ground is at least 18 ft. when measured at the lowest point. Ground messenger wires that support power conductors in conformance with the NEC.

5. Protect and when necessary repair any existing electrical conduits uncovered during the construction process in a timely manner and in conformance with the NEC.

GROUND RODS & GROUNDING ELECTRODES

A. MATERIAL INFORMATION

1. Provide and install a grounding electrode at electrical services. Provide ground rods according to DMS 11040 and the plans. Larger diameter or longer length rods may be called for in some specific locations, see the individual plans sheets. Concrete encased grounding electrodes may be called for in specific locations including electrical service, see individual plan sheets.

B. CONSTRUCTION METHODS

1. Furnish auxiliary ground rods for lightning protection and install in soil, concrete, or both, as called for in the plans. For ground rods installed in concrete, ensure the connection of the conductor to the ground rod is readily accessible for inspection or repairs. For ground rods installed in soil, ensure that the upper end is between 2 to 4 in. below finished grade.

2. Do not place ground rods in the same drilled hole as a timber pole.

3. Install ground rods so the imprinted part number is at the upper end of the rod.

4. Remove all non-conductive coatings such as concrete splatter from the rod at the clamp location.

5. Route all conductors as short and straight as possible for connection to lightning protection ground rods. When a bend is required, ensure a minimum radius bend of four inches for these conductors.

6. Unless otherwise called for in the plans, protect grounding electrode conductors with non-metallic conduit. When protecting grounding electrode conductors with metal conduit, provide and install a grounding type bushing and properly sized bonding jumper on each end of the metal conduit.

7. Written authorization is required before installing a ground rod in a horizontal trench for rocky soil or a solid rock bottom.

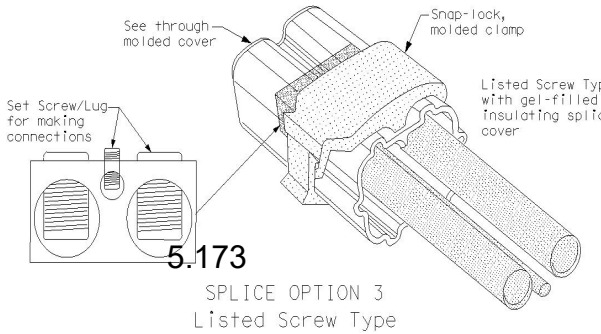

SPLICE OPTION 3
Listed Screw Type

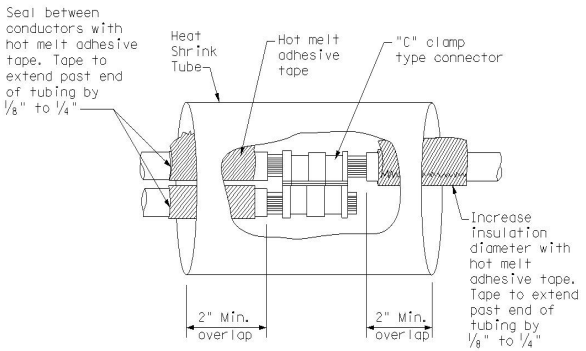

SPLICE OPTION 1
Compression Type

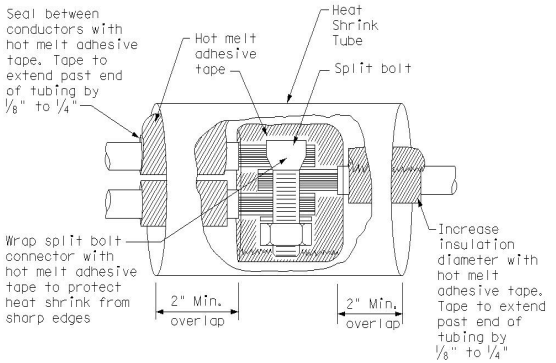

SPLICE OPTION 2
Split Bolt Type

Texas Department of Transportation | Traffic Operations Division Standard

ELECTRICAL DETAILS CONDUCTORS

ED(3)-14

FILE: ed3-14.dgn	DN: TxDOT	CK: TxDOT	DW: TxDOT	CK: TxDOT
©TxDOT October 2014	CONT	SECT	JOB	HIGHWAY
REVISIONS				
	DIST	COUNTY		SHEET NO.
				49

71C

DISCLAIMER:
The use of this standard is governed by the "Texas Engineering Practice Act". No warranty of any kind is made by TxDOT for any purpose whatsoever. TxDOT assumes no responsibility for the conversion of this standard to other formats or for incorrect results or damages resulting from its use.

DATE:
FILE:

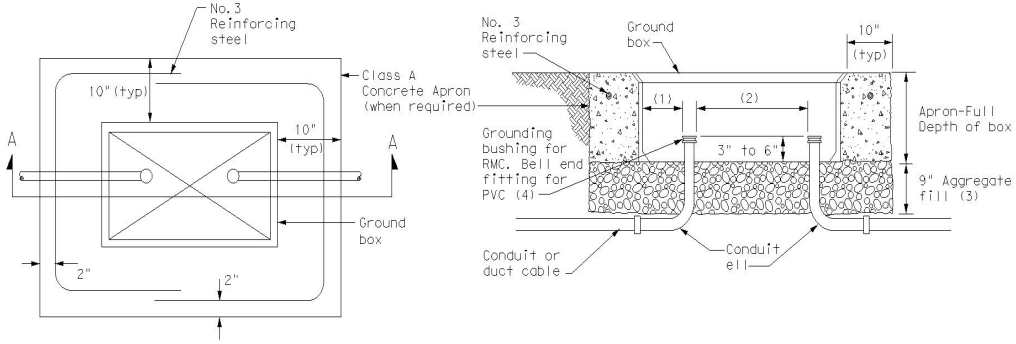

PLAN VIEW

SECTION A - A

APRON FOR GROUND BOX

(1) Uniformly space ends of conduits within the ground box. Position ends of conduits so that ground box walls do not interfere with the installation of grounding bushings or bell end fittings.

(2) Maintain sufficient space between conduits to allow for proper installation of bushings.

(3) Place aggregate under the box, not in the box. Aggregate should not encroach on the interior volume of the box.

(4) Install a grounding bushing on the upper end of all RMC terminating in a ground box. Ground RMC elbows when any part of the elbow is less than 18 in. below the bottom of the ground box. Install a PVC bushing or bell end fitting on the upper end of all PVC conduits terminating in a ground box.

GROUND BOX DIMENSIONS	
TYPE	OUTSIDE DIMENSIONS (INCHES) (Width x Length X Depth)
A	12 X 23 X 11
B	12 X 23 X 22
C	16 X 29 X 11
D	16 X 29 X 22
E	12 X 23 X 17

GROUND BOX COVER DIMENSIONS								
TYPE	DIMENSIONS (INCHES)							
	H	I	J	K	L	M	N	P
A, B & E	23 1/4	23	13 3/4	13 1/2	9 7/8	5 1/8	1 3/8	2
C & D	30 1/2	30 1/4	17 1/2	17 1/4	13 1/4	6 3/4	1 3/8	2

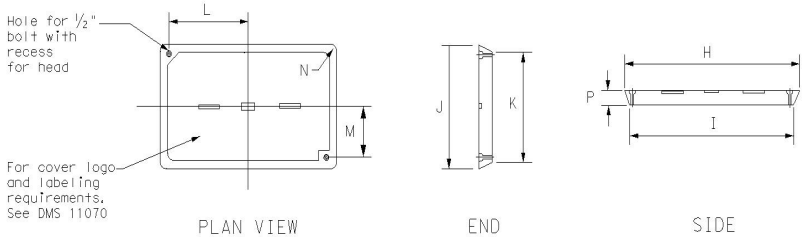

PLAN VIEW

END

SIDE

GROUND BOX COVER

GROUND BOXES

A. MATERIALS

1. Provide polymer concrete ground boxes measuring 16x30x24 in. (WxLxD) or smaller in accordance with Departmental Material Specification (DMS) 11070 "Ground Boxes" and Item 624 "Ground Boxes."

2. Provide Type A, B, C, D, and E ground boxes as shown in the plans, and as listed on the Material Producers List (MPL) on the Department web site under "Roadway Illumination and Electrical Supplies," Item 624.

3. Ensure ground box cover is correctly labeled in accordance with DMS 11070.

4. Provide larger ground boxes in accordance with Item 624 and as shown in the plans.

B. CONSTRUCTION METHODS

1. Remove all gravel and dirt from conduit. Cap all conduits prior to placing aggregate and setting ground box. Provide Grade 3 or 4 coarse aggregate as shown on Table 2 of Item 302 "Aggregates for Surface Treatments." Ensure aggregate bed is in place and at least 9 inches deep, prior to setting the ground box. Install ground box on top of aggregate.

2. Cast ground box aprons in place. Reinforcing steel may be field bent. Ensure the depth of concrete for the apron extends from finished grade to the top of the aggregate bed under the box. Ground box aprons, including concrete and reinforcing steel, are subsidiary to ground boxes when called for by descriptive code.

3. Keep bolt holes in the box clear of dirt. Bolt covers down when not working in ground boxes.

4. Install all conduits and ells in a neat and workmanlike manner. Uniformly space conduits so grounding bushings and bell end fittings can easily be installed.

5. Temporarily seal all conduits in the ground box until conductors are installed.

6. Permanently seal conduits immediately after the completion of conductor installation and pull tests. Permanently seal the ends of all conduits with duct seal, expandable foam, or other method as approved. Do not use duct tape as a permanent conduit sealant. Do not use silicone caulk as a sealant.

7. When a ground rod is present in a ground box, bond all equipment grounding conductors together and to the ground rod with listed connectors.

8. When a type B or D ground box is stacked to meet volume requirements, it is allowable to cut an appropriately sized hole for conduit entry in the side wall at least 18 inches below grade.

9. If an existing ground box in the contract has a metal cover, bond the cover to the equipment grounding conductor with a 3 ft. long stranded bonding jumper the same size as the grounding conductor. The bonding jumper is subsidiary to various bid items. Verify existing ground boxes with metal covers are shown on the plans, with notes fully describing the work required.

10. If other ground boxes with metal covers are within the project limits but are not part of the contract, the Engineer may direct the Contractor to bond the metal covers, identifying the specific boxes in writing. This work will be paid for separately.

11. Bond metal ground box covers to the grounding conductor with a tank ground type lug.

Texas Department of Transportation

Traffic Operations Division Standard

ELECTRICAL DETAILS
GROUND BOXES

ED(4)-14

FILE: ed4f14.dgn	DN: TxDOT	CK: TxDOT	DW: TxDOT	CK: TxDOT
©TxDOT October 2014	CONT	SECT	JOB	HIGHWAY
REVISIONS	.	.	.	.
	DIST	COUNTY		SHEET NO.
	.	.		50

71D

DISCLAIMER:
The use of this standard is governed by the "Texas Engineering Practice Act". No warranty of any kind is made by TxDOT for any purpose whatsoever. TxDOT assumes no responsibility for the conversion of this standard to other formats or for incorrect results or damages resulting from its use.

DATE:
FILE:

ELECTRICAL SERVICES NOTES

1. Provide new materials. Ensure installation and materials comply with the applicable provisions of the National Electrical Code (NEC) and National Electrical Manufacturers Association (NEMA) standards. Ensure material is Underwriters Laboratories (UL) listed. Provide and install electrical service conduits, conductors, disconnects, contactors, circuit breaker panels, and branch circuit breakers as shown on the Electrical Service Data chart in the plans. Faulty fabrication or poor workmanship in material, equipment, or installation is justification for rejection. Where manufacturers provide warranties and guarantees as a customary trade practice, furnish these to the State.

2. Provide electrical services in accordance with Electrical Details standard sheets, Departmental Material Specification (DMS) 11080 "Electrical Services," DMS 11081 "Electrical Services-Type A," DMS 11082 "Electrical Services-Type C," DMS 11083 "Electrical Services-Type D," DMS 11084 "Electrical Services-Type T," DMS 11085 "Electrical Services-Pedestal (PS)", and Item 628 "Electrical Services" of the Standard Specifications. Provide electrical service types A, C, and D, as listed on the Material Producers List (MPL) on the Department web site under "Roadway Illumination and Electrical Supplies," Item 628. Provide other service types as detailed on the plans.

3. Provide all work, materials, services, and any incidentals needed to install a complete electrical service as specified in the plans.

4. Coordinate with the Engineer and the utility provider for metering and compliance with utility requirements. Primary line extensions, connection charges, meter charges, and other charges by the utility company to provide power to the location are paid for in accordance with Item 628. Get approval for the costs associated with these charges prior to engaging the utility company to do the work. Consult with the utility provider to determine costs and requirements, and coordinate the work as approved.

5. The enclosure manufacturer will provide Master Lock Type 2 with brass tumblers keyed #2195 for all custom electrical enclosures. Installing Contractor is to provide Master Lock #2195 Type 2 with brass tumblers for "off the shelf" enclosures. Master Lock #2195 keys and locks become property of the State. Unless otherwise approved, do not energize electrical service equipment until locks are installed.

6. Enclosures with external disconnects that de-energize all equipment inside the enclosure do not need a dead front trim. Protect incoming line terminations from incidental contact as required by the NEC.

7. When galvanized is specified for nuts, screws, bolts or miscellaneous hardware, stainless steel may be used.

8. Provide wiring and electrical components rated for 75°C. Provide red, black, and white colored XHHW service entrance conductors of minimum size 6 American Wire Gauge (AWG). Identify size 6 AWG conductors by continuous color jacket. Identify electrical conductors sized 4 AWG and larger by continuous color jacket or by colored tape. Mark at least 6 inches of the conductor's insulation with half laps of colored tape, when identifying conductors. Ensure each service entrance conductor exits through a separately bushed non-metallic opening in the weatherhead. The lengths of the conductors outside the weatherhead are to be 12 inches minimum, 18 inches maximum, or as required by utility.

9. All electrical service conduit and conductors attached to the electrical service including the riser or the elbow below ground are subsidiary to the electrical service. For an underground utility feed, all service conduit and conductors after the elbow, including service conduit and conductors for the utility pole riser when furnished by the Contractor, will be paid for separately.

10. Provide rigid metal conduit (RMC) for all conduits on service, except for the ½ in. PVC conduit containing the electrical service grounding electrode conductor. Size the service entrance conduit as shown in the plans. Ensure conduit for branch circuit entry to enclosure is the same size as that shown on the layout sheets for branch circuit conduit. Extend all rigid metal conduits a minimum of 6 inches underground and then couple to the type and schedule of the conduit shown on the layout for that particular branch circuit. Install a grounding bushing on the RMC where it terminates in the service enclosure.

11. Use of liquidtight flexible metal conduit (LFMC) is allowed between the meter and service enclosure when they are mounted 90 to 180 degrees to each other. Size the LFMC the same size as service entrance conduit. LFMC must not exceed 3 feet in length. Strap LFMC within 1 foot of each end. LFMC less than 12 inches in length need not be strapped. Each end of LFMC must have a grounding bushing or be terminated with a grounding fitting. The LFMC must contain a grounded (neutral) conductor. Ensure any bend in LFMC never exceeds 180 degrees. A pull test is required on all installed conductors, with at least six inches of free conductor movement demonstrated to the satisfaction of the Engineer.

12. Ensure all mounting hardware and installation details of services conform to utility company specifications.

13. For all electrical service enclosures listed under Item 628 on the MPL, the UL 508 enclosure manufacturers will prepare and submit a schematic drawing unique to each service. Before shipment to the job site, place the applicable laminated schematic drawings and the laminated plan sheet showing the electrical service data chart used to build the enclosure in the enclosure's data pocket. The installing contractor will copy and laminate the actual project plan sheets detailing all equipment and branch circuits supplied by that service. The laminated plan sheets are to be placed in the service enclosure's document pocket. Reduce 11 in. x 17 in. plan sheets to 8 ½ in. x 11 in. before laminating. If the installation differs from the plan sheets, the installing contractor is to redline plan sheets before laminating.

14. When providing an "Off The Shelf" Type D or Type T service, provide laminated plan sheets detailing equipment and branch circuits supplied by that service. Reduce 11 in. x 17 in. plan sheets to 8 ½ in. x 11 in before laminating. Deliver these drawings before completion of the work to the Engineer, instead of placing in enclosure that has no door pocket.

15. Do not install conduit in the back wall of a service enclosure where it would penetrate the equipment mounting panel inside the enclosure. Provide grounding bushings on all metal conduits, and terminate bonding jumpers to grounding bus. Grounding bushings are not required when the end of the metal conduit is fitted with a conduit sealing hub or threaded boss, such as a meter base hub.

SERVICE ASSEMBLY ENCLOSURE

1. Provide threaded hub for all conduit entries into the top of enclosure.

2. Type galvanized steel (GS) enclosures may be used for Type C panelboards and for Type D and T services that do not use an enclosure mounted photocell or lighting contactor. Provide GS enclosures in accordance with DMS 11080, 11082, 11083, and 11084.

3. Provide aluminum (AL) and stainless steel (SS) enclosures for Types A, C, and D in accordance with DMS 11080, 11081, 11082, 11083, and 11084. Do not paint stainless steel.

4. Provide pedestal service (PS) enclosures in accordance with ED(9) and DMS 11080 and 11085. Do not provide GS pedestal services. If GS is shown in the PS descriptive code, provide an AL enclosure.

MAIN DISCONNECT & BRANCH CIRCUIT BREAKERS

1. Field drill flange-mounted remote operator handle if needed, to ensure handle is lockable in both the "On" and "Off" positions.

2. When the utility company provides a transformer larger than 50 KVA, verify that the available fault current is less than the circuit breaker's ampere interrupting capacity (AIC) rating and provide documentation from the electric utility provider to the Engineer.

PHOTOELECTRIC CONTROL

1. Provide photocell as listed on the MPL. Move, adjust, or shield the photocell from stray or ambient night time light to ensure proper operation. Mount photocell facing north when practical. Mount top of pole photocells as shown on Top Mounted Photocell Detail.

*ELECTRICAL SERVICE DATA

Elec. Service ID	Plan Sheet Number	Electrical Service Description	Service Conduit **Size	Service Conductors No./Size	Safety Switch Amps	Main Ckt. Bkr. Pole/Amps	Two-Pole Contractor Amps	Panelbd/ Loadcenter Amp Rating	Branch Circuit ID	Branch Ckt. Bkr. Pole/Amps	Branch Circuit Amps	KVA Load
SB 183	289	ELC SRV TY A 240/480 100(SS)AL(E)SF(U)	2"	3/#2	100	2P/100	100	N/A	Lighting NB	2P/40	26	28.1
									Lighting SB	2P/40	25	
									Underpass	1P/20	15	
NB Access	30	ELC SRV TY D 120/240 060(NS)SS(E)TS(O)	1 ¼"	3/#6	N/A	2P/60		100	Sig. Controller	1P/30	23	5.3
							30		Luminaires	2P/20	9	
									CCTV	1P/20	3	
2nd & Main	58	ELC SRV TY T 120/240 000(NS)GS(N)SP(O)	1 ¼"	3/#6	N/A	N/A	N/A	70	Flashing Beacon 1	1P/20	4	1.0
									Flashing Beacon 2	1P/20	4	

* Example only, not for construction. All new electrical services must have electrical service data chart specific to that service as shown in the plans.

** Verify service conduit size with utility. Size may change due to utility meter requirements. Ensure conduit size meets the National ELectrical Code.

EXPLANATION OF ELECTRICAL SERVICE DESCRIPTIVE CODE

ELEC SERV TY X XXX/XXX XXX (XX) XX (X) XX (X)

- Schematic Type
- Service Voltage V / V
- Disconnect Amp Rating
  000 Indicates main lug only/
  Typically Type T
- (SS)= Safety Switch Ahead of Meter-Check with Utility
- (NS)= No safety Switch Ahead of Meter-Check with Utility
- Enclosure Type
  GS= Galvanized steel("off the shelf")
  SS= Stainless steel(Custom Enclosure)See MPL
  AL= Aluminum (Custom Enclosure)See MPL
- Photocell Mounting Location
  (E)= Inside Service/Enclosure Mounted
  (T)= Top of pole
  (L)= Luminaire mounted
  (N)= None/No Photocell or Lighting Contactor Required
- Service Support Type
  GC= Granite concrete
  OC= Other concrete
  TP= Timber pole
  SP= Steel pole
  SF= Steel frame
  OT= Pole by others or paid for separately
  EX= Existing pole
  TS= Service on traffic signal pole
  PS= Pedestal Service
- O= Overhead Service Feed from Utility
- U= Underground Service Feed from Utility

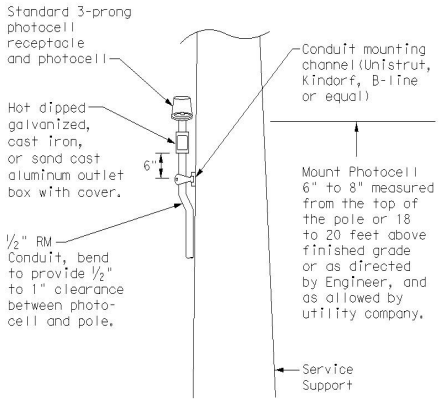

TOP MOUNTED PHOTOCELL

Install conduit strap maximum 3 feet from box. 5 foot maximum spacing between straps supporting conduit.

Texas Department of Transportation | Traffic Operations Division Standard

ELECTRICAL DETAILS SERVICE NOTES & DATA

ED(5)-14

FILE: ed5x14.dgn	DN: TxDOT	CK: TxDOT	DW: TxDOT	CK: TxDOT
©TxDOT October 2014	CONT	SECT	JOB	HIGHWAY
REVISIONS	.	.	.	.
	DIST	COUNTY		SHEET NO.
	.	.		51

71E

PACKET 5.175 July 11, 2023

DISCLAIMER:
The use of this standard is governed by the "Texas Engineering Practice Act". No warranty of any kind is made by TxDOT for any purpose whatsoever. TxDOT assumes no responsibility for the conversion of this standard to other formats or for incorrect results or damages resulting from its use.

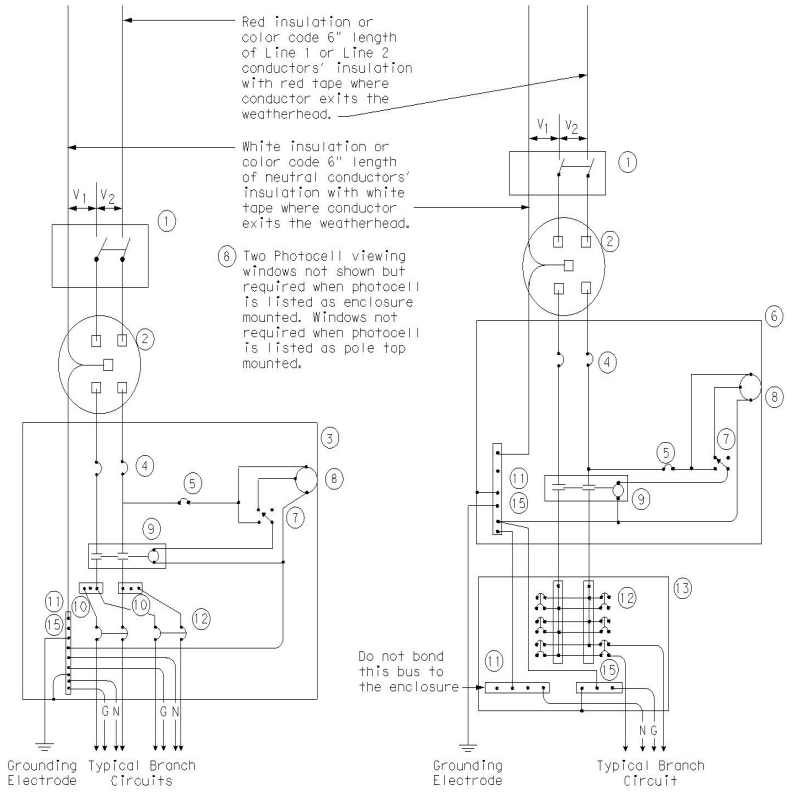

SCHEMATIC TYPE A
THREE WIRE

SCHEMATIC TYPE C
THREE WIRE

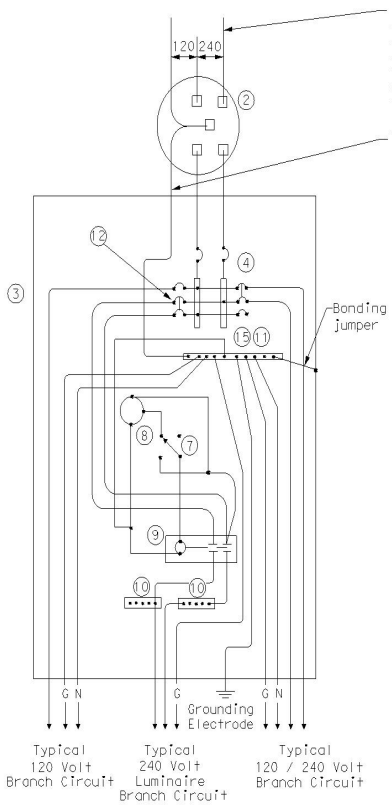

SCHEMATIC TYPE D - CUSTOM
120/240 VOLTS - THREE WIRE

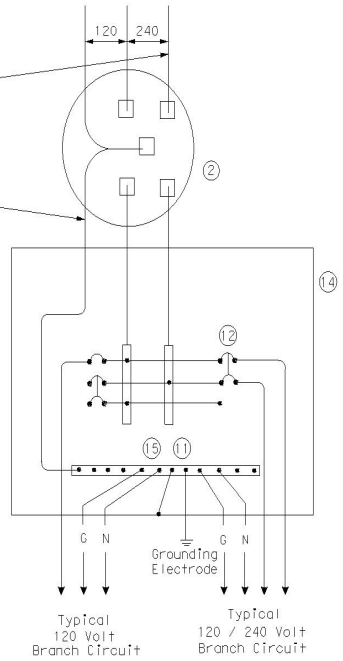

SCHEMATIC TYPE T
120/240 VOLTS - THREE WIRE

Galvanized steel-"Buy Off The Shelf" only. When required install photocell top of the pole or on luminaire only, no lighting contractor will be installed.

WIRING LEGEND	
———	Power Wiring
———	Control Wiring
—N—	Neutral Conductor
—G—	Equipment grounding conductor-always required

SCHEMATIC LEGEND	
1	Safety Switch (when required)
2	Meter (when required-verify with electric utility provider)
3	Service Assembly Enclosure
4	Main Disconnect Breaker (See Electrical Service Data)
5	Circuit Breaker, 15 Amp (Control Circuit)
6	Auxiliary Enclosure
7	Control Station ("H-O-A" Switch)
8	Photo Electric Control (enclosure-mounted shown)
9	Lighting Contactor
10	Power Distribution Terminal Blocks
11	Neutral Bus
12	Branch Circuit Breaker (See Electrical Service Data)
13	Separate Circuit Breaker Panelboard
14	Load Center
15	Ground Bus

Texas Department of Transportation

Traffic Operations Division Standard

ELECTRICAL DETAILS SERVICE ENCLOSURE AND NOTES

ED(6)-14

FILE: ed614.dgn	DN: TxDOT	CK: TxDOT	DW: TxDOT	CK: TxDOT
©TxDOT October 2014	CONT	SECT	JOB	HIGHWAY
REVISIONS	.	.	.	.
	DIST	COUNTY		SHEET NO.
	.	.		52

71F

DATE:
FILE:

TRAFFIC SIGNAL NOTES

1. Do not pass luminaire conductors through the signal controller cabinet.
2. Include an equipment grounding conductor in all conduits throughout the electrical system. Bond all exposed metal parts to the grounding conductor.
3. Provide roadway luminaires, when required, in accordance with the material and construction sections of Item 610, "Roadway Illumination Assemblies," except for performance testing of luminaires. Test installed roadway luminaires for proper operation as a part of the associated traffic signal system test.
4. If internally illuminated street name signs are approved for use, ground the fixture to the pole with a 12 AWG green XHHW conductor.
5. Bond anchor bolts to rebar cage in two locations using #3 bars or 6 AWG stranded copper conductors. Use listed mechanical connectors rated for embedment in concrete. See TXDOT standard TS-FD for further details.
6. Drill and tap signal poles for ½ in. X 13 UNC tank ground fitting. Provide and install tank ground fitting 4 in. to 6 in. directly below electrical service enclosure. Provide properly sized hole through the bottom of the enclosure for the service grounding electrode conductor. Connect the electrical service grounding electrode conductor to the tank ground fitting. Ensure electrical service grounding electrode conductor is as short and straight as possible from the enclosure to the tank ground fitting. See Inset A detail for further information. Size service entrance conduit and branch circuit conduit as shown in the plans.
7. Mount electrical service enclosure and meter to signal pole with stainless steel bands. Ensure bands are a minimum width of ¾ in. Secure enclosures to bands using two-bolt brackets. Install brackets near top and bottom of each enclosure. Install properly sized stainless steel washers on each bolt in the enclosure. Band or drill and tap properly sized stand-off straps to signal pole for attaching conduit.
8. Conduct pull tests and insulation resistance tests on all illumination and power conductors as required in Item 620 "Electrical Conductors" and ED(3). To prevent electronics damage, do not conduct insulation resistance tests on traffic signal cables after termination.
9. Lock all enclosures and bolt down all ground box covers before applying power to the signal installation.
10. Terminate conduits entering the top of enclosures with a conduit-sealing hub or threaded boss such as meter hub. Install a grounding bushing on all metal conduits not connected to conduit-sealing hub or threaded boss. Bond the grounding bushing to the ground bus with a bonding jumper. Seal all conduits entering enclosures with duct seal or expanding foam. Do not use silicone to seal conduit ends.
11. For all conduits, ensure the burial depth is a minimum of 18". Ensure the minimum burial depth for conduit placed under a roadway is 24".

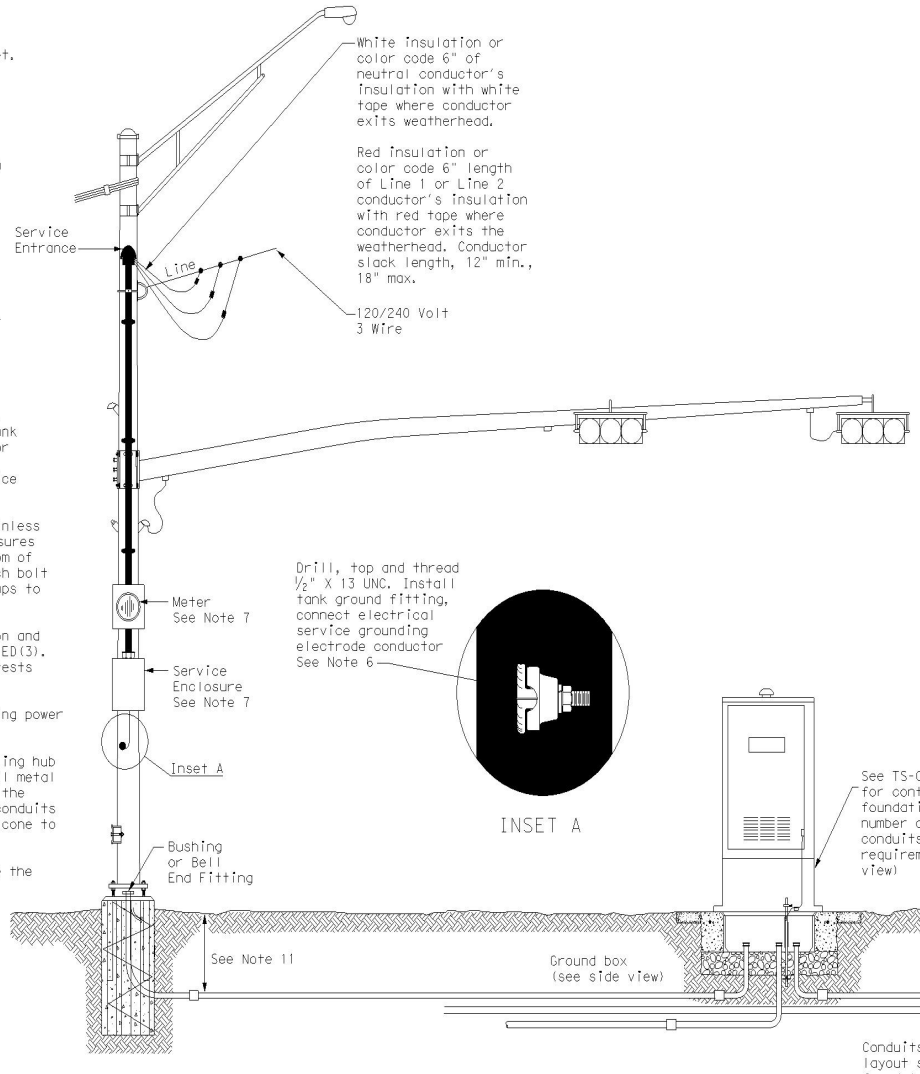

SIGNAL POLE WITH SERVICE

Type I electrical service mounted on signal pole shown as an example. See electrical details, layout sheets, and electrical service data chart for additional details.

INSET A

SIGNAL CONTROLLER FRONT VIEW

SIGNAL POLE

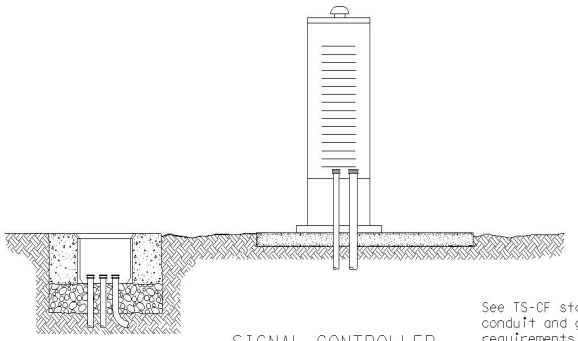

SIGNAL CONTROLLER SIDE VIEW

See TS-CF standard for conduit and grounding requirements. See layout sheets for ground box locations and any additional conduits that are required.

Texas Department of Transportation

Traffic Operations Division Standard

ELECTRICAL DETAILS TYPICAL TRAFFIC SIGNAL SYSTEM DETAILS

ED(8)-14

FILE: ed8-14.dgn	DN: TxDOT	CK: TxDOT	DW: TxDOT	CK: TxDOT
©TxDOT October 2014	CONT	SECT	JOB	HIGHWAY
REVISIONS	.	.	.	.
	DIST	COUNTY		SHEET NO.
	.	.		53

71H

DISCLAIMER:
The use of this standard is governed by the "Texas Engineering Practice Act". No warranty of any kind is made by TxDOT for any purpose whatsoever. TxDOT assumes no responsibility for the conversion of this standard to other formats or for incorrect results or damages resulting from its use.

DATE:
FILE:

PEDESTAL SERVICE NOTES

1. Manufacture pedestal electrical services in accordance with Departmental Material Specifications (DMS)11080 "Electrical Services", 11085 "Electrical Services-Pedestal (PS)" and Item 628 "Electrical Services. "Provide pedestal electrical services as listed on the Material Producers list (MPL) on the Department's web site under "Roadway Illumination and Electrical Supplies," Item 628. Ensure all mounting hardware and installation details of services meet utility company specifications. Contact the local utility company for approval of pedestal details prior to installing the electrical pedestal service. Submit any changes required by the utility company prior to manufacturing the pedestal enclosure.

2. When a meter socket is required, provide a socket with a minimum 100 amp rating that complies with local utility requirements.

3. Provide Class A or C concrete for pedestal service foundations in accordance with Item 420, "Concrete Substructures," except that concrete will not be paid for directly but is considered subsidiary to Item 628.

4. Provide #4 reinforcing steel for foundations in accordance with Item 440, "Reinforcement for Concrete."

5. Install ½ in. X 2 1/16 in. minimum length concrete single expansion type anchors for mounting pedestal enclosure to foundation. Anchor location to match mounting holes in each corner of enclosure. Secure each of the four corners of the pedestal enclosure to the anchors in the foundation with a ½ in. galvanized or stainless steel machine thread bolt, a properly sized locknut and a flat washer.

6. Finish top of concrete foundation in a neat and workmanlike manner. If leveling washers are used, ensure no more than ⅛ in. gap at any corner. Do not exceed a maximum dip or rise in the foundation of ⅛ in. per foot. When properly installed, ensure the top of the service enclosure is level front to back and side to side within ¼ in. Repair rocking or movement of the service enclosure at no additional cost to the department.

7. Do not use liquidtight flexible metal conduit (LFMC) on pedestal type services.

8. Ensure all elbows in the foundation are sized as per utility provider's conduit requirements for underground conduit and feeders. PVC extensions may be installed provided the ends of the rigid metal conduits are more than 2 in. below the top of the concrete foundation. Where extension conduits are metal, grounding bushings must be installed with a bonding jumper properly terminated.

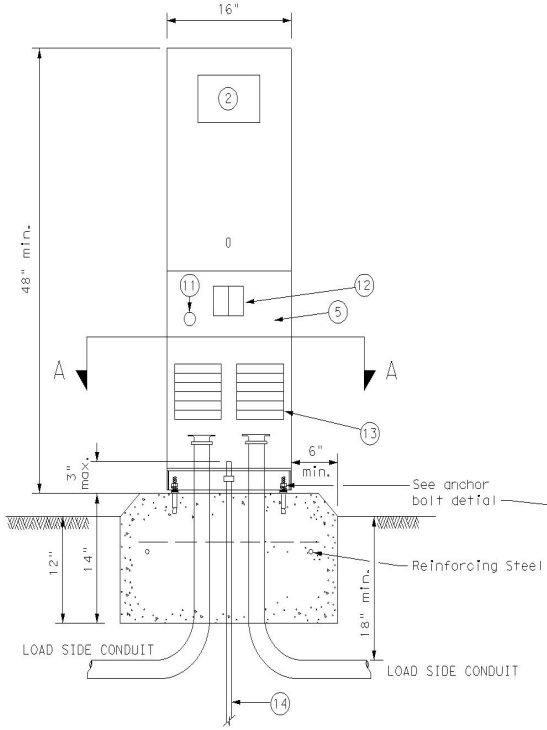

FRONT VIEW

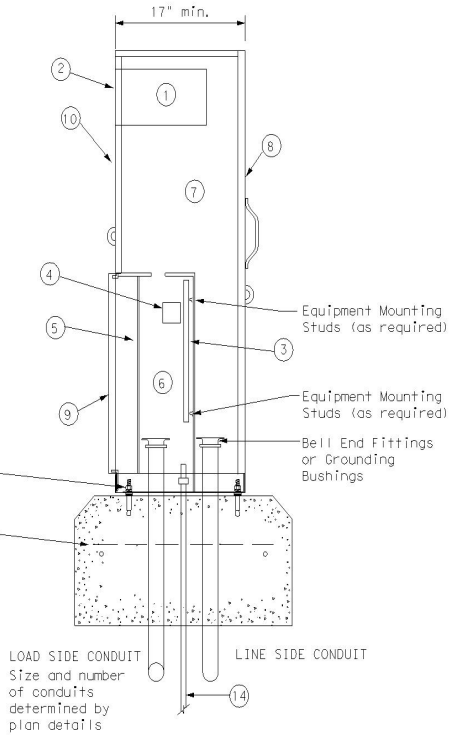

SIDE VIEW

TYPE C shown, TYPE A similar except that TYPE A shall have individual circuit breakers (CB) mounted on an equipment mounting panel. CB Handles shall protrude through hinged deadfront trim.

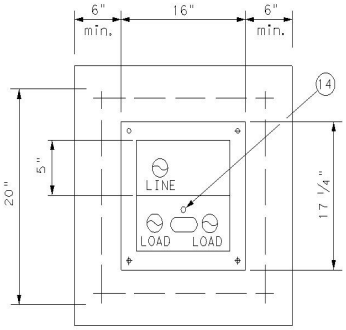

SECTION A-A

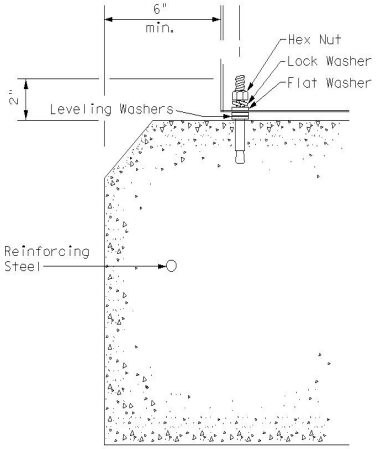

ANCHOR BOLT DETAIL

LEGEND	
1	Meter Socket, (when required)
2	Meter Socket Window, (when required)
3	Equipment Mounting Panel
4	Photo Electric Control Window, (When required)
5	Hinged Deadfront Trim
6	Load Side Conduit Trim
7	Line Side Conduit Area
8	Utility Access Door, with handle
9	Pedestal Door
10	Hinged Meter Access
11	Control Station (H-O-A Switch)
12	Main Disconnect
13	Branch Circuit Breakers
14	Copper Clad Ground Rod - 5/8" X 10'

Texas Department of Transportation

Traffic Operations Division Standard

ELECTRICAL DETAILS
ELECTRICAL SERVICE SUPPORT
PEDESTAL SERVICE TYPE PS

ED(9)-14

FILE: ed9x14.dgn	DN: TxDOT	CK: TxDOT	DW: TxDOT	CK: TxDOT
©TxDOT October 2014	CONT	SECT	JOB	HIGHWAY
REVISIONS	.	.	.	.
	DIST	COUNTY		SHEET NO.
	.	.		54

71J

DISCLAIMER:
The use of this standard is governed by the "Texas Engineering Practice Act". No warranty of any kind is made by TxDOT for any purpose whatsoever. TxDOT assumes no responsibility for the conversion of this standard to other formats or for incorrect results or damages resulting from its use.

DATE:
FILE:

DISCLAIMER:
The use of this standard is governed by the "Texas Engineering Practice Act". No warranty of any kind is made by TxDOT for any purpose whatsoever. TxDOT assumes no responsibility for the conversion of this standard to other formats or for incorrect results or damages resulting from its use.

DATE: DATE TIME
FILE: DOCUMENT NAME

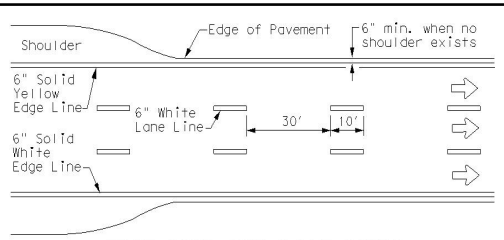

EDGE LINE AND LANE LINES
ONE-WAY ROADWAY
WITH OR WITHOUT SHOULDERS

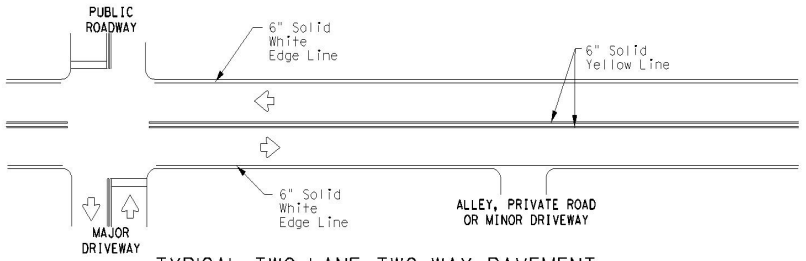

TYPICAL TWO-LANE, TWO-WAY PAVEMENT
MARKINGS THROUGH INTERSECTIONS

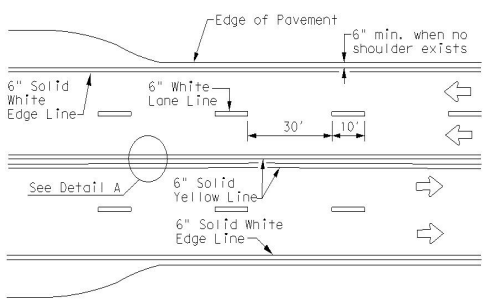

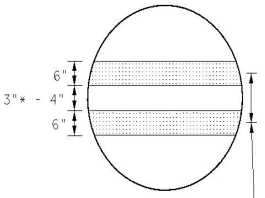

DETAIL "A"

9"** min. - 10" typ.
(18" max. for traveled way greater than 48' only)

CENTERLINE AND LANE LINES
FOUR LANE TWO-WAY ROADWAY
WITH OR WITHOUT SHOULDERS

* 2" minimum for restripe projects when approved by the Engineer.

** 8" minimum for restripe projects when approved by the Engineer.

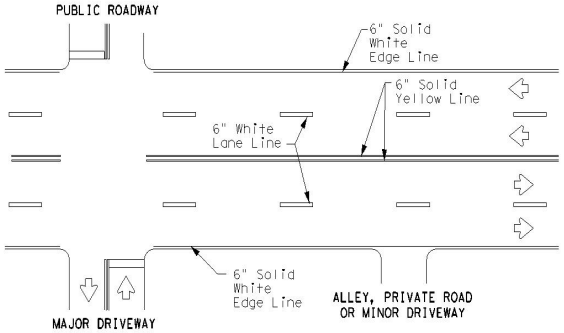

TYPICAL MULTI-LANE, TWO-WAY PAVEMENT
MARKINGS THROUGH INTERSECTIONS

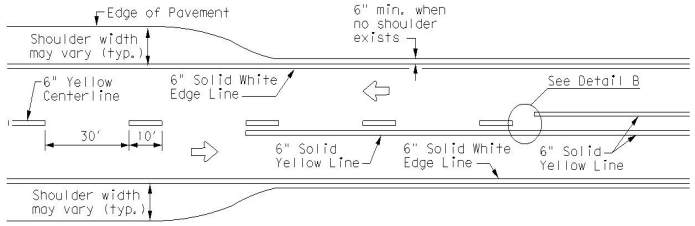

TWO LANE TWO-WAY ROADWAY
WITH OR WITHOUT SHOULDERS

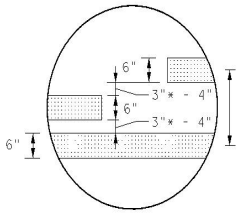

18" min. - 20" max.
(16" minimum for restripe projects when approved by the Engineer.)

DETAIL "B"

* 2" minimum for restripe projects when approved by the Engineer.

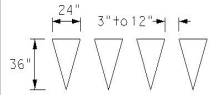

For posted speed on road being marked equal to or greater than 45 MPH.

YIELD LINES

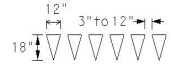

For posted speed on road being marked equal to or less than 40 MPH.

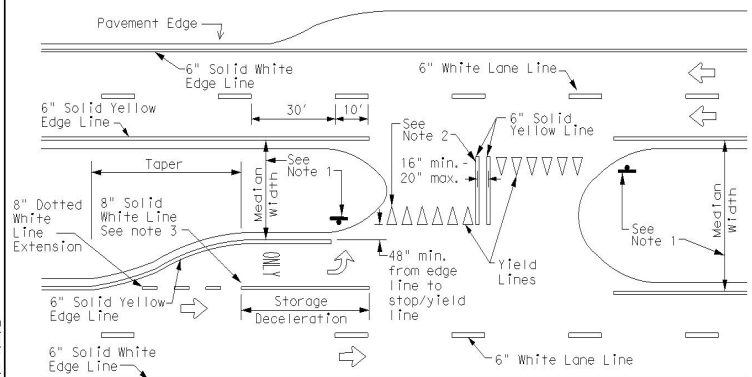

FOUR LANE DIVIDED ROADWAY CROSSOVERS

NOTES

1. Where divided highways are separated by median widths at the median opening itself of 30 feet or more, median openings shall be signed as two separate intersections. Each median opening has two width measurements, with one measurement for each approach. The narrow median width will be the controlling width to determine if signs are required. Yield signs are the typical intersection control. Stop signs and stop bars are optional as determined by the Engineer.
2. Install median striping (double yellow centerlines and stop lines/yield lines) when a 50' or greater median centerline can be placed. Stop lines shall only be used with stop signs. Yield lines shall only be used with yield signs.
3. Length of turn bays, including taper, deceleration, and storage lengths shall be as shown on the plans or as directed by the Engineer.

GENERAL NOTES

1. Edge line striping shall be as shown in the plans or as directed by the Engineer. The edge line should not be placed less than 6 inches from the edge of pavement. This distance may vary due to pavement raveling or other conditions. Edge lines are not required in curb and gutter sections of roadways.
2. The traveled way includes only that portion of the roadway used for vehicular travel. It does not include the parking lanes, sidewalks, berms and shoulders. The traveled ways shall be measured from the center of edge line to the center of edge line of a two lane roadway.

MATERIAL SPECIFICATIONS	
PAVEMENT MARKERS (REFLECTORIZED)	DMS-4200
EPOXY AND ADHESIVES	DMS-6100
BITUMINOUS ADHESIVE FOR PAVEMENT MARKERS	DMS-6130
TRAFFIC PAINT	DMS-8200
HOT APPLIED THERMOPLASTIC	DMS-8220
PERMANENT PREFABRICATED PAVEMENT MARKINGS	DMS-8240

All pavement marking materials shall meet the required Departmental Material Specifications as specified by the plans.

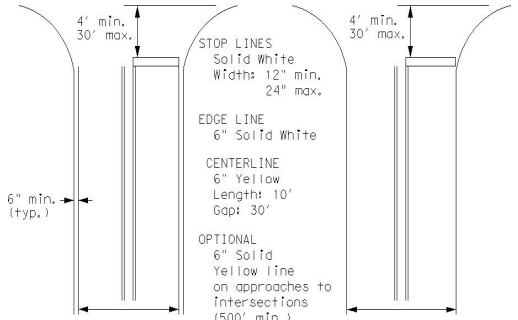

NOTE: Traveled way is exclusive of shoulder widths. Refer to General Note 2 for additional details.

GUIDE FOR PLACEMENT OF STOP LINES,
EDGE LINE & CENTERLINE

Based on Traveled Way and Pavement Widths for Undivided Roadways

Texas Department of Transportation

Traffic Safety Division Standard

TYPICAL STANDARD
PAVEMENT MARKINGS

FILE: pmt-22.dgn		DN:	CK:	DW:	CK:
©TxDOT December 2022		CONT	SECT	JOB	HIGHWAY
REVISIONS					
11-78 8-00 6-20		DIST	COUNTY		SHEET NO.
8-95 3-03 12-22					55
5-00 2-12					
22A					

PM(1)-22

PACKET
5.179
July 11, 2023

REFLECTIVE RAISED PAVEMENT MARKERS FOR VEHICLE POSITIONING GUIDANCE

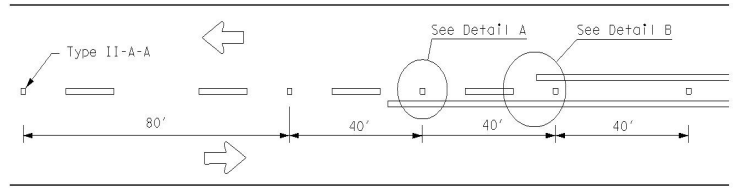

CENTERLINE FOR ALL TWO LANE TWO-WAY ROADWAYS

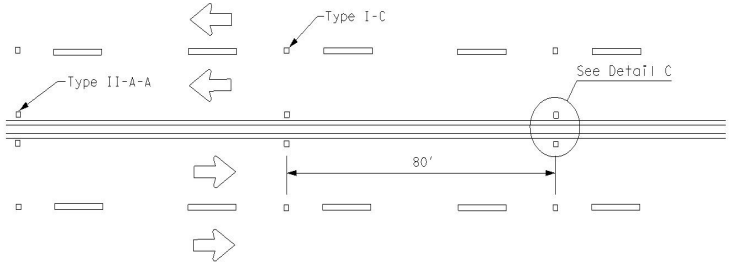

CENTERLINE & LANE LINES
FOR FOUR LANE TWO-WAY ROADWAYS

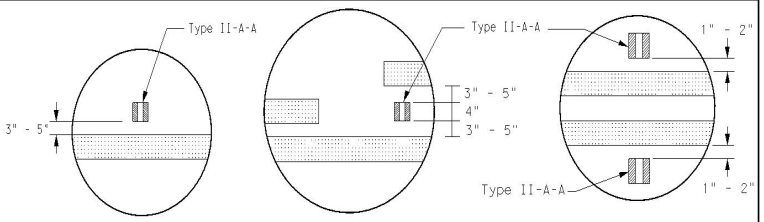

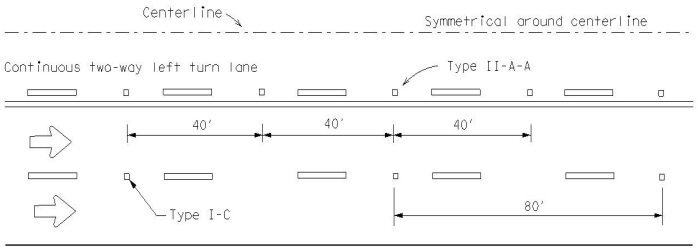

CENTERLINE AND LANE LINES FOR TWO-WAY LEFT TURN LANE

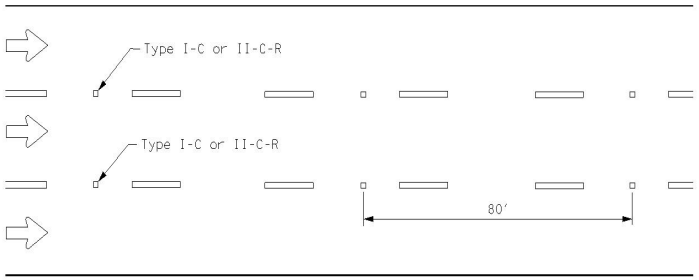

LANE LINES FOR ONE-WAY ROADWAY (NON-FREEWAY FACILITIES)

Raised pavement markers Type II-C-R shall have clear face toward normal traffic and red face toward wrong-way traffic.

See Note 3.

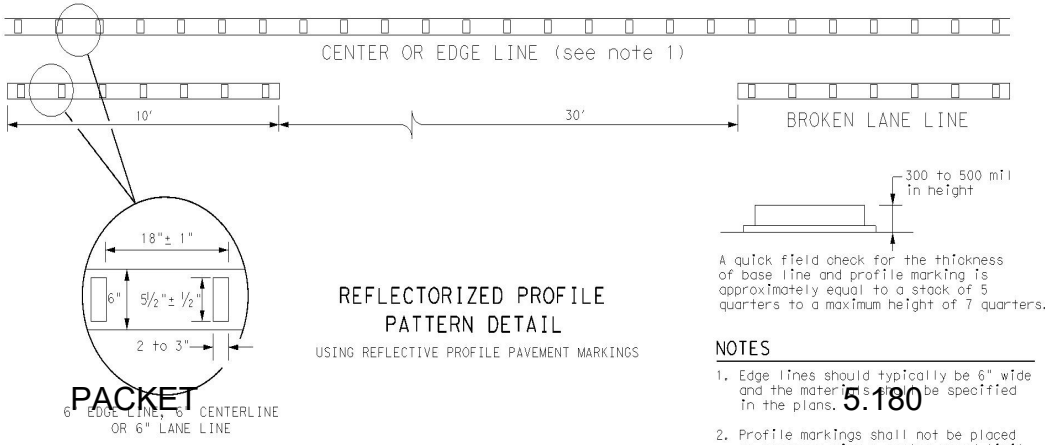

REFLECTORIZED PROFILE
PATTERN DETAIL

USING REFLECTIVE PROFILE PAVEMENT MARKINGS

A quick field check for the thickness of base line and profile marking is approximately equal to a stack of 5 quarters to a maximum height of 7 quarters.

NOTES

1. Edge lines should typically be 6" wide and the material shall be specified in the plans.
2. Profile markings shall not be placed on roadways with a posted speed limit of 45 MPH or less.

GENERAL NOTES

1. All raised pavement markers placed along broken lines shall be placed in line with and midway between the stripes.
2. On concrete pavements the raised pavement markers should be placed to one side of the longitudinal joints.
3. Use raised pavement marker Type I-C with undivided roadways, flush medians and two way left turn lanes. Use raised pavement marker Type II-C-R with divided highways and raised medians.

MATERIAL SPECIFICATIONS	
PAVEMENT MARKERS (REFLECTORIZED)	DMS-4200
EPOXY AND ADHESIVES	DMS-6100
BITUMINOUS ADHESIVE FOR PAVEMENT MARKERS	DMS-6130
TRAFFIC PAINT	DMS-8200
HOT APPLIED THERMOPLASTIC	DMS-8220
PERMANENT PREFABRICATED PAVEMENT MARKINGS	DMS-8240

All pavement marking materials shall meet the required Departmental Material Specifications as specified by the plans.

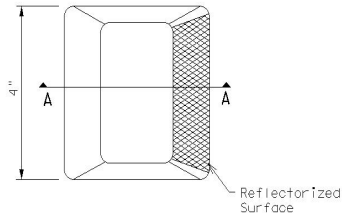

Type I (Top View)

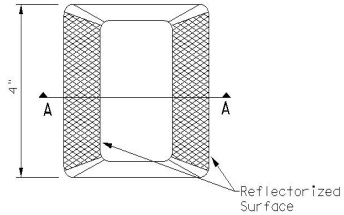

Type II (Top View)

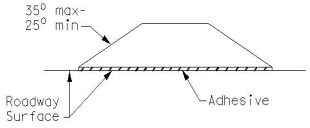

SECTION A

RAISED PAVEMENT MARKERS

Texas Department of Transportation

Traffic Safety Division Standard

POSITION GUIDANCE USING RAISED MARKERS RELECTORIZED PROFILE MARKINGS

PM(2)-22

FILE: pm2-22.dgn		DN:	CK:	DW:	CK:		
©TxDOT December 2022		CONT	SECT	JOB		HIGHWAY	
REVISIONS							
4-77 8-00 6-20		DIST	COUNTY			SHEET NO.	
4-92 2-10 12-22						56	
5-00 2-12							
22B							

DISCLAIMER:
The use of this standard is governed by the "Texas Engineering Practice Act". No warranty of any kind is made by TxDOT for any purpose whatsoever. TxDOT assumes no responsibility for the conversion of this standard to other formats or for incorrect results or damages resulting from its use.

DATE: DATE TIME
FILE: DOCUMENT NAME

PACKET 5.180 July 11, 2023

DISCLAIMER:
The use of this standard is governed by the "Texas Engineering Practice Act". No warranty of any kind is made by TxDOT for any purpose whatsoever. TxDOT assumes no responsibility for the conversion of this standard to other formats or for incorrect results or damages resulting from its use.

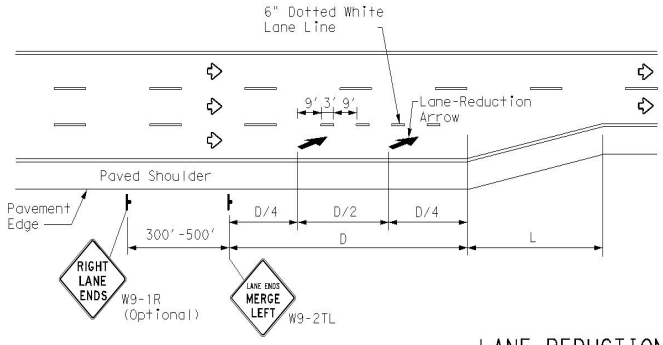

LANE REDUCTION

NOTES

1. Lane reduction pavement markings are used where the number of through lanes is reduced because of narrowing of the roadway or because of a section of on-street parking in what would otherwise be a through lane. For Texas Super 2 Passing Lanes, see TS2(PL) standard sheets.
2. On divided highways, an additional RIGHT LANE ENDS (W9-1R) sign may be installed in the median aligned with the W9-1R sign on the right side of the highway.
3. Lane reduction arrows are required for speeds of 45 mph or greater. An optional third lane reduction arrow may be added based on engineering judgement. If used, the optional third lane reduction arrow should be centered between the first and last lane reduction arrows.
4. For lane reductions on Freeways and Expressways, signing shall conform to the TxDOT Freeway Signing Handbook.

ADVANCED WARNING SIGN DISTANCE (D)		
Posted Speed	D (ft)	L (ft)
30 MPH	460	$L=\frac{WS^2}{60}$
35 MPH	565	
40 MPH	670	
45 MPH	775	L=WS
50 MPH	885	
55 MPH	990	
60 MPH	1,100	
65 MPH	1,200	
70 MPH	1,250	
75 MPH	1,350	

GENERAL NOTES

1. Lane use word and arrow markings shall be used where through lanes approaching an intersection become mandatory turn lanes. Lane use word and arrow markings should be used in auxiliary lanes of substantial length. Lane use arrow markings or word and arrow markings may be used in other lanes and turn bays for emphasis. Details for words and arrows are as shown in the Standard Highway Sign Designs for Texas.
2. When lane-use words and arrow markings are used, two sets of arrows should be used if the length of the bay is greater than 180 feet. When a single lane use arrow or word and arrow marking is used for a short turn lane, it should be located at or near the upstream end of the full-width turn lane.
3. Use raised pavement marker Type I-C with undivided highways, flush medians and two way left turn lanes. Use raised pavement marker Type II-C-R with divided highways and raised medians.
4. Length of turn bays, including taper, deceleration, and storage lengths shall be as shown on the plans or as directed by the Engineer. See Chapter 3 of the Roadway Design Manual for additional information on turning lanes or storage lengths.

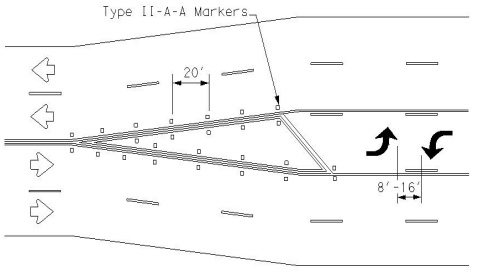

A two-way left-turn (TWLT) lane-use arrow pavement marking should be used at or just downstream from the beginning of a two-way left-turn lane within a corridor. Repeating the marking after each intersection or dedicated turn bay is not required unless stated elsewhere in the plans.

TYPICAL TRANSITION FOR TWLTL AND DIVIDED HIGHWAY

MATERIAL SPECIFICATIONS	
PAVEMENT MARKERS (REFLECTORIZED)	DMS-4200
EPOXY AND ADHESIVES	DMS-6100
BITUMINOUS ADHESIVE FOR PAVEMENT MARKERS	DMS-6130
TRAFFIC PAINT	DMS-8200
HOT APPLIED THERMOPLASTIC	DMS-8220
PERMANENT PREFABRICATED PAVEMENT MARKINGS	DMS-8240

All pavement marking materials shall meet the required Departmental Material Specifications as specified by the plans.

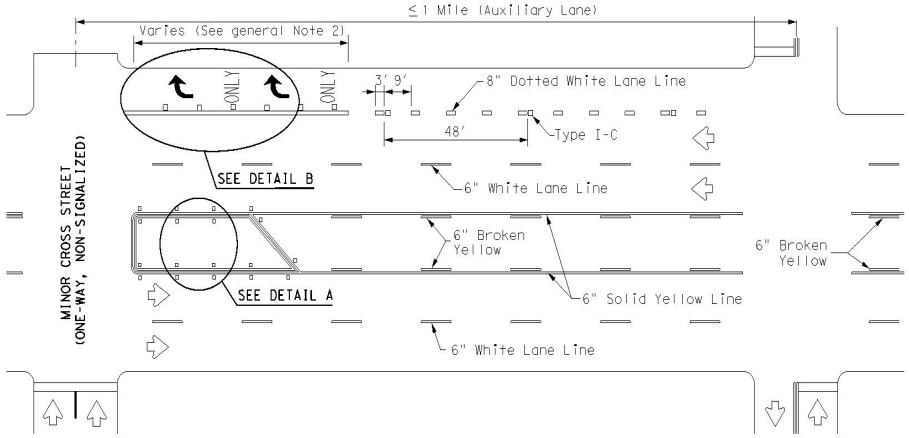

TYPICAL TWLTL AT ONE-WAY STREET AND RIGHT TURN AUXILIARY LANE

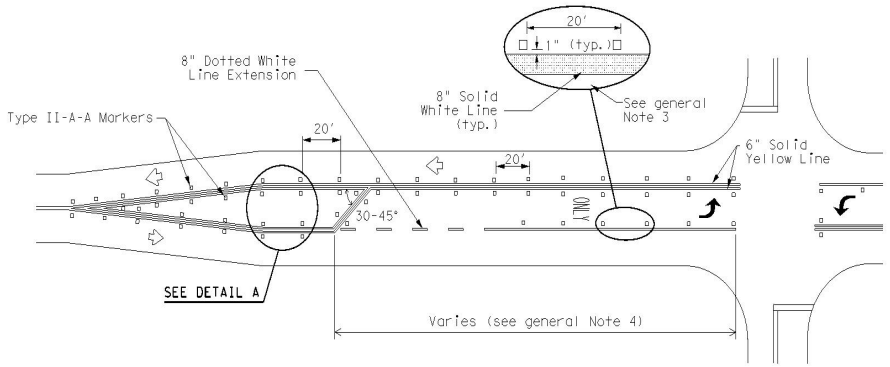

TYPICAL TWO-LANE ROADWAY INTERSECTION WITH LEFT TURN BAYS

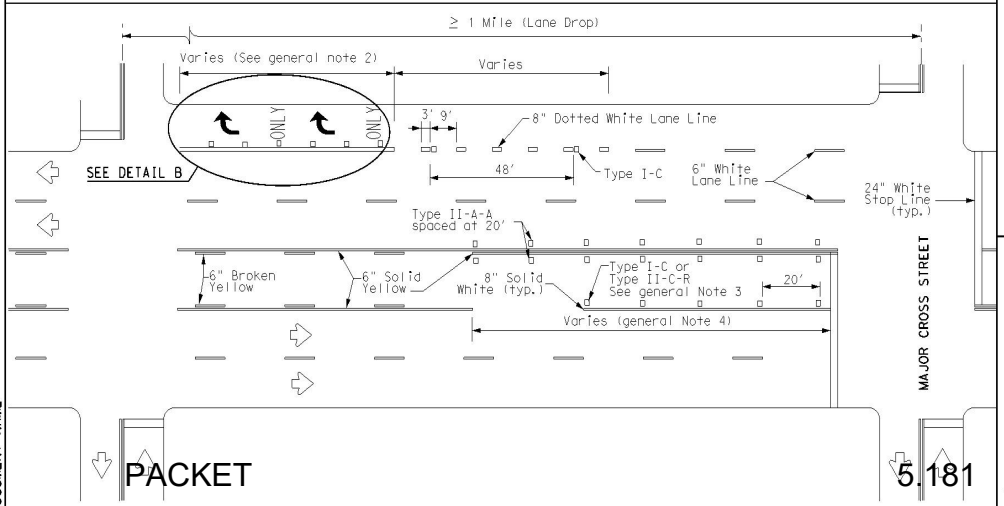

TYPICAL TWLTL AT TWO-WAY CROSS STREET AND RIGHT TURN LANE DROP

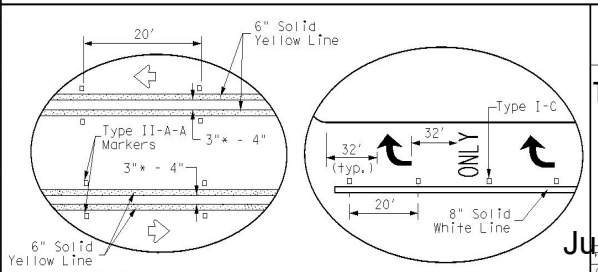

* 2" minimum allowed for restripe projects when approved by the Engineer.

Texas Department of Transportation — Traffic Safety Division Standard

TWO-WAY LEFT TURN LANES, RURAL LEFT TURN BAYS, AND LANE REDUCTION PAVEMENT MARKINGS

PM(3)-22

FILE: pm3-22.dgn	DN:	CK:	DW:	CK:
©TxDOT December 2022	CONT	SECT	JOB	HIGHWAY
REVISIONS 4-98 3-03 6-20; 5-00 2-10 12-22; 8-00 2-12	DIST	COUNTY		SHEET NO. 57
22C				

DATE: DATE TIME
FILE: DOCUMENT NAME

DISCLAIMER:
The use of this standard is governed by the "Texas Engineering Practice Act". No warranty of any kind is made by TxDOT for any purpose whatsoever. TxDOT assumes no responsibility for the conversion of this standard to other formats or for incorrect results or damages resulting from its use.

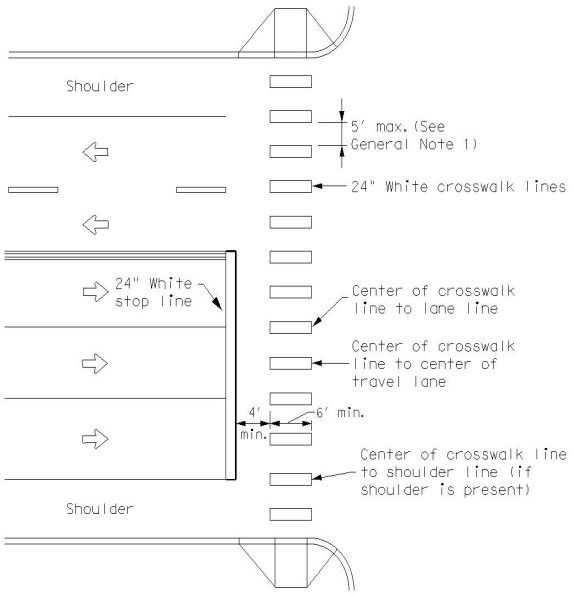

HIGH-VISIBILITY LONGITUDINAL CROSSWALK
AT CONTROLLED APPROACH

GENERAL NOTES

1. Longitudinal crosswalk lines should not be placed in the wheel path of vehicles. Center the crosswalk lines on travel lanes, lane lines, and shoulder lines (if present).
2. A minimum 6" clear distance shall be provided to the curb face. If the last crosswalk line falls into this distance it must be omitted.
3. For divided roadways, adjustments in spacing of the crosswalk lines should be made in the median so that the crosswalk lines are maintained in their proper location across the travel portion of the roadway.
4. At skewed crosswalks, the crosswalk lines are to remain parallel to the lane lines.
5. Each crosswalk shall be a minimum of 6' wide.
6. The High-Visibility Longitudinal Crosswalk is the preferred crosswalk pattern on State Highways. Other crosswalk patterns as shown in the "Texas Manual on Uniform Traffic Control Devices" may be used. All crosswalk designs and dimension shall comply with the "Texas Manual on Uniform Traffic Control Devices."
7. Final placement of Stop Bar and Crosswalk shall be approved by the Engineer in the field.

MATERIAL SPECIFICATIONS	
PAVEMENT MARKERS (REFLECTORIZED)	DMS-4200
EPOXY AND ADHESIVES	DMS-6100
BITUMINOUS ADHESIVE FOR PAVEMENT MARKERS	DMS-6130
TRAFFIC PAINT	DMS-8200
HOT APPLIED THERMOPLASTIC	DMS-8220
PERMANENT PREFABRICATED PAVEMENT MARKINGS	DMS-8240

All pavement marking materials shall meet the required Departmental Material Specifications as specified by the plans.

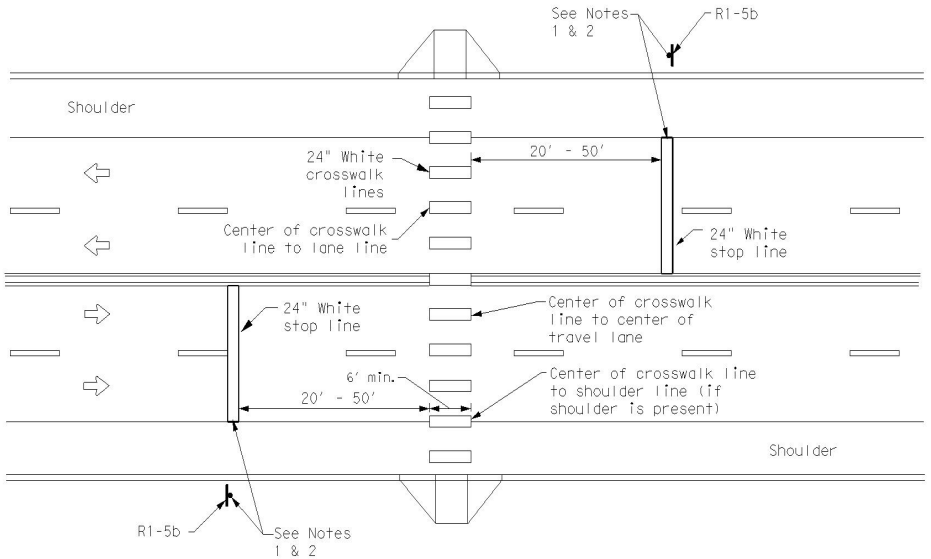

UNSIGNALIZED MIDBLOCK HIGH-VISIBILITY
LONGITUDINAL CROSSWALK

NOTES:

1. Use stop bars with Stop Here For Pedestrians (R1-5b) signs at unsignalized midblock cross walks.
2. Use stop bars with STOP HERE ON RED (R10-6 or R10-6a) signs at mid block crosswalks controlled by traffic signals or pedestrian hybrid beacons.

Texas Department of Transportation | Traffic Safety Division Standard

CROSSWALK PAVEMENT MARKINGS

PM(4)-22A

FILE: pm4-22a.dgn	DN:	CK:	DW:	CK:
©TxDOT December 2022	CONT	SECT	JOB	HIGHWAY
REVISIONS 6-20 6-22 12-22 22D	DIST	COUNTY		SHEET NO. 58

DATE: DATE TIME
FILE: DOCUMENT NAME

DISCLAIMER: The use of this standard is governed by the "Texas Engineering Practice Act". No warranty of any kind is made by TxDOT for any purpose whatsoever. TxDOT assumes no responsibility for the conversion of this standard to other formats or for incorrect results or damages resulting from its use.

DATE:
FILE:

SIGN SUPPORT DESCRIPTIVE CODES

(Descriptive Codes correspond to project estimate and quantities sheets)

SM RD SGN ASSM TY XXXXX(X)XX(X-XXXX)

Post Type

FRP = Fiberglass Reinforced Plastic Pipe (see SMD(FRP))
TWT = Thin-Walled Tubing (see SMD(TWT))
10BWG = 10 BWG Tubing (see SMD(SLIP-1) to (SLIP-3))
S80 = Schedule 80 Pipe (see SMD(SLIP-1) to (SLIP-3))

Number of Posts (1 or 2)

Anchor Type

UA = Universal Anchor - Concreted (see SMD(FRP) and (TWT))
UB = Universal Anchor - Bolted down (see SMD(FRP) and (TWT))
WS = Wedge Anchor Steel - (see SMD(TWT))
WP = Wedge Anchor Plastic (see SMD(TWT))
SA = Slipbase - Concreted (see SMD(SLIP-1) to (SLIP-3))
SB = Slipbase - Bolted Down (see SMD(SLIP-1) to (SLIP-3))

Sign Mounting Designation

P = Prefab. "Plain" (see SMD(SLIP-1) to (SLIP-3), (TWT), (FRP))
T = Prefab. "T" (see SMD(SLIP-1) to (SLIP-3), (TWT))
U = Prefab. "U" (see SMD(SLIP-1) to (SLIP-3))
IF REQUIRED
1EXT or 2EXT = Number of Extensions (see SMD(SLIP-1) to (SLIP-3), (TWT))
BM = Extruded Wind Beam (see SMD(SLIP-1) to (SLIP-3))
WC = 1.12 #/ft Wing Channel (see SMD(SLIP-1) to (SLIP-3))
EXAL = Extruded Aluminum Sign Panels (see SMD(SLIP-3))

REQUIRED CLEARANCE FOR BREAKAWAY SUPPORT

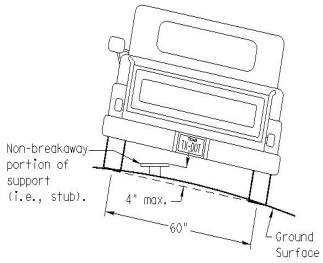

To avoid vehicle undercarriage snagging, any substantial remains of a breakaway support, when it is broken away, should not project more than 4 inches above a 60-inch chord (i.e., typical space between wheel paths).

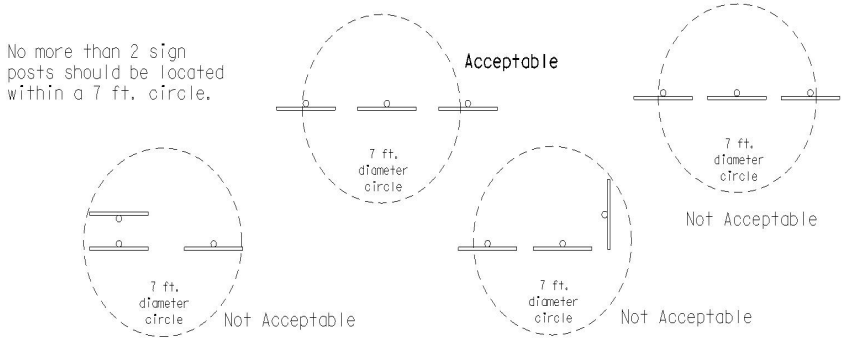

SIGN LOCATION

PAVED SHOULDERS

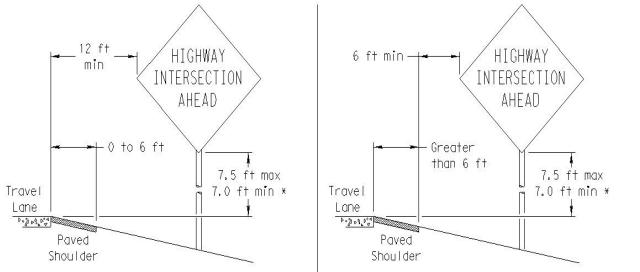

LESS THAN 6 FT. WIDE

When the shoulder is 6 ft. or less in width, the sign must be placed at least 12 ft. from the edge of the travel lane.

GREATER THAN 6 FT. WIDE

When the shoulder is greater than 6 ft in width, the sign must be placed at least 6 ft. from the edge of the shoulder.

BEHIND BARRIER

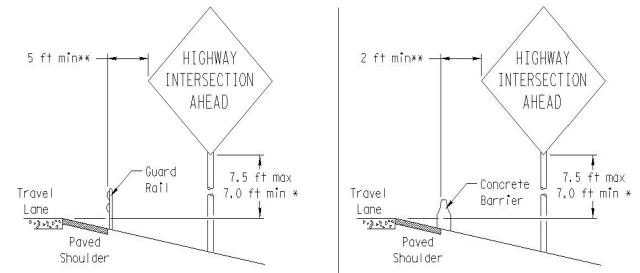

BEHIND GUARDRAIL

BEHIND CONCRETE BARRIER

**Sign clearance based on distance required for proper guard rail or concrete barrier performance.

T-INTERSECTION

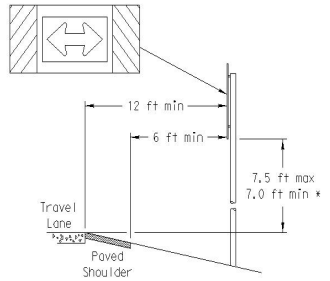

When this sign is needed at the end of a two-lane, two way roadway, the right edge of the sign should be in line with the centerline of the roadway. Place as close to ROW as practical.

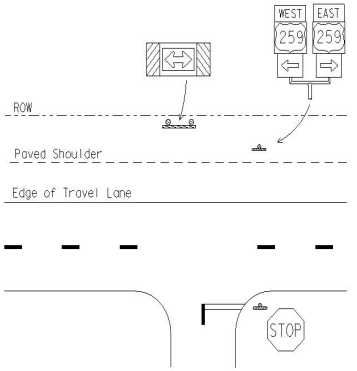

* Signs shall be mounted using the following condition that results in the greatest sign elevation:

(1) a minimum of 7 to a maximum of 7.5 feet above the edge of the travel lane or

(2) a minimum of 7 to a maximum of 7.5 feet above the grade at the base of the support when sign is installed on the backslope.

The maximum values may be increased when directed by the Engineer.

See the Traffic Operations Division website for detailed drawings of sign clamps, Triangular Slipbase System components and Wedge Anchor System components.

The website address is:
http://www.txdot.gov/publications/traffic.htm

TYPICAL SIGN ATTACHMENT DETAIL

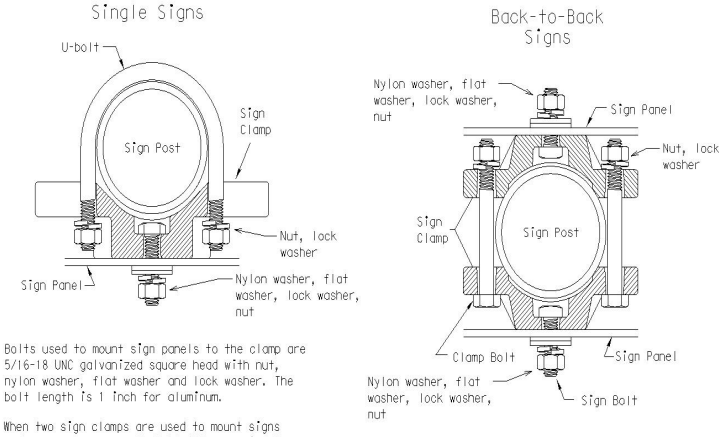

Bolts used to mount sign panels to the clamp are 5/16-18 UNC galvanized square head with nut, nylon washer, flat washer and lock washer. The bolt length is 1 inch for aluminum.

When two sign clamps are used to mount signs back-to-back, use a 5/16-18 UNC galvanized hex head per ASTM A307 with nut and helical-spring lock washer. The approximate bolt lengths for various post sizes and sign clamp types are given in the table at right. The bolt length may need to be adjusted depending upon field conditions.

Sign clamps may be either the specific size clamp or the universal clamp.

Pipe Diameter	Approximate Bolt Length	
	Specific Clamp	Universal Clamp
2" nominal	3"	3 or 3 1/2"
2 1/2" nominal	3 or 3 1/2"	3 1/2 or 4"
3" nominal	3 1/2 or 4"	4 1/2"

SIGNS WITH PLAQUES

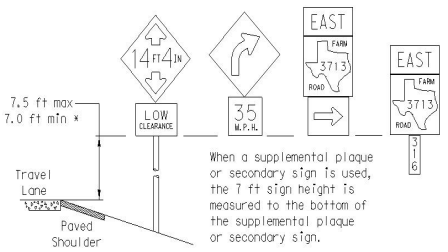

When a supplemental plaque or secondary sign is used, the 7 ft sign height is measured to the bottom of the supplemental plaque or secondary sign.

CURB & GUTTER OR RAISED ISLAND

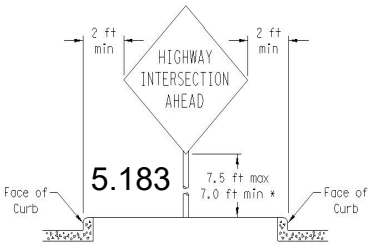

RESTRICTED RIGHT-OF-WAY

(When 6 ft min. is not possible.)

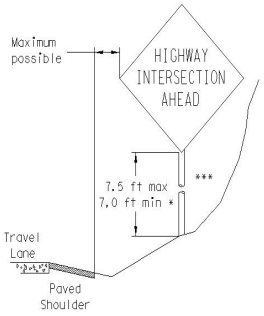

Right-of-way restrictions may be created by rocks, water, vegetation, forest, buildings, a narrow island, or other factors.

In situations where a lateral restriction prevents the minimum horizontal clearance from the edge of the travel lane, signs should be placed as far from the travel lane as practical.

*** Post may be shorter if protected by guardrail or if Engineer determines the post could not be hit due to extreme slope.

Texas Department of Transportation
Traffic Operations Division

SIGN MOUNTING DETAILS SMALL ROADSIDE SIGNS GENERAL NOTES & DETAILS

SMD(GEN)-08

©TxDOT July 2002

9-08 REVISIONS	DN: TxDOT	CK: TxDOT	DW: TxDOT	CK: TxDOT
	CONT	SECT	JOB	HIGHWAY
	.	.	.	.
	DIST	COUNTY		SHEET NO.
	.	.		59

26A

PACKET 5.183 July 11, 2023

DISCLAIMER: The use of this standard is governed by the "Texas Engineering Practice Act". No warranty of any kind is made by TxDOT for any purpose whatsoever. TxDOT assumes no responsibility for the conversion of this standard to other formats or for incorrect results or damages resulting from its use.

DATE:
FILE:

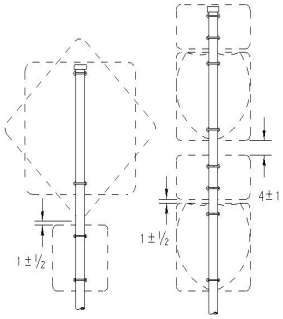

SM RD SGN ASSM TY XXXXX(1)XX(P)

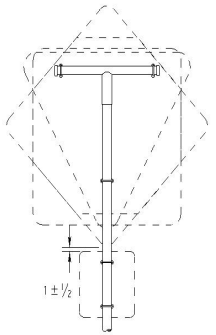

SM RD SGN ASSM TY XXXXX(1)XX(T)

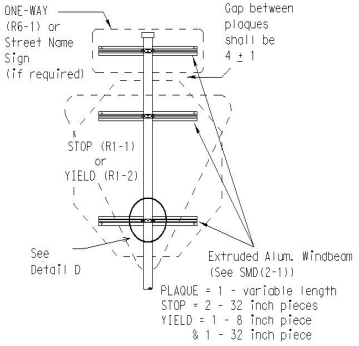

SM RD SGN ASSM TY XXXXX(1)XX(P-BM)

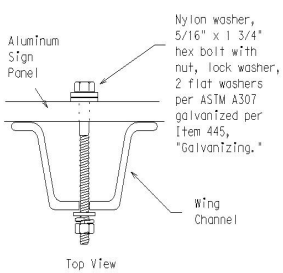

Detail A

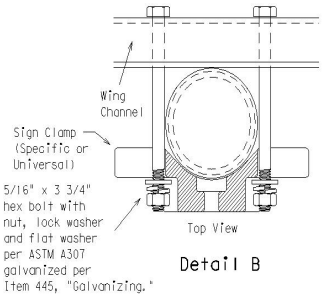

Detail B

GENERAL NOTES:

1. | SIGN SUPPORT | # OF POSTS | MAX. SIGN AREA |
|---|---|---|
| 10 BWG | 1 | 16 SF |
| 10 BWG | 2 | 32 SF |
| Sch 80 | 1 | 32 SF |
| Sch 80 | 2 | 64 SF |

2. The Engineer may require that a Schedule 80 post be used in place of a 10 BWG where a sign height is abnormally high due to a fill slope.
3. Sign supports shall not be spliced except where shown. Sign support posts shall not be spliced.
4. Aluminum sign blanks shall conform to Departmental Material Specifications DMS-7110 and shall have the following minimum thicknesses: 0.080 for signs less than 7.5 sq. ft., 0.100 for signs 7.5 to 15 sq. ft., and 0.125 for signs greater than 15 sq. ft.
5. Signs that require specific supports due to reasons in addition to windloading are indicated on the "REQUIRED SUPPORT" table on this sheet.
6. For horizontal rectangular signs fabricated from flat aluminum, T-brackets are used for signs 24 inches or less in height. U-brackets are used for signs of greater height.
7. When two triangular slipbase supports are used to support a single sign, they shall not be "rigidly" connected to each other except through the sign panel. This will allow each support to act independently when impacted by an errant vehicle.
8. Wing channel shall meet ASTM A 1011 SS Gr 50 and be galvanized per ASTM A 123.
9. Excess pipe, wing channel, or windbeam shall be cut off so that it does not extend beyond the sign panel (i.e., excess support shall not be visible when the sign is viewed from the front.) Repair galvanized coating at cut support ends per Item 445, "Galvanizing."
10. Additional route markers may be added vertically, provided the total sign area does not exceed the maximum allowable amount per Note 1.
11. Additional sign clamp required on the "T-bracket" post for 24 inch height signs. Place the clamp 3 inches above bottom of sign when possible.
12. Post open ends shall be fitted with Friction Caps.
13. Sign blanks shall be the sizes and shapes shown on the plans.

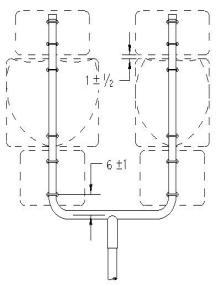

SM RD SGN ASSM TY XXXXX(1)XX(U)

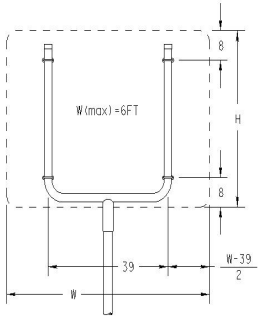

SM RD SGN ASSM TY XXXXX(1)XX(U)

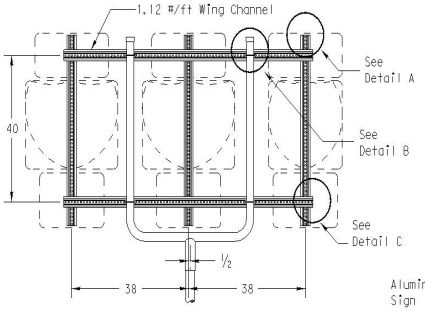

SM RD SGN ASSM TY XXXXX(1)XX(U-WC)
(See Note 11)

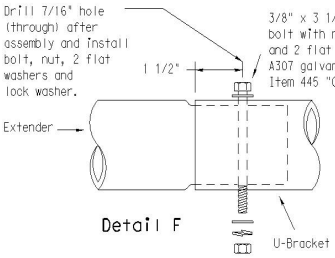

Detail F

Splices shall only be allowed behind the sign substrate.

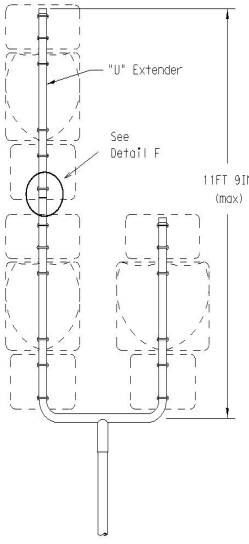

SM RD SGN ASSM TY S80(1)XX(U-1EXT)

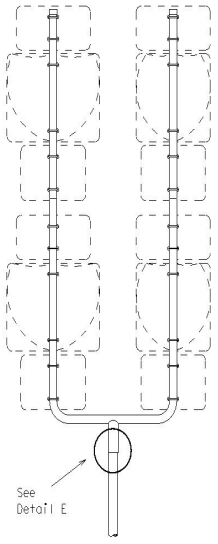

SM RD SGN ASSM TY S80(1)XX(U-2EXT)

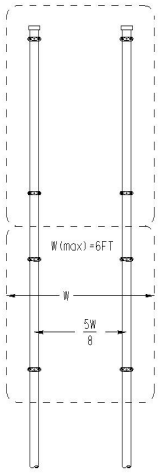

SM RD SGN ASSYM TY XXXXX(2)XX(P)

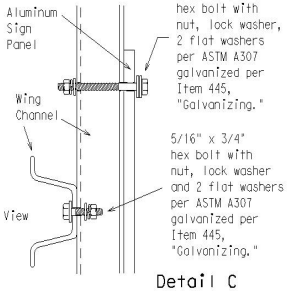

Detail C

SIDE VIEW

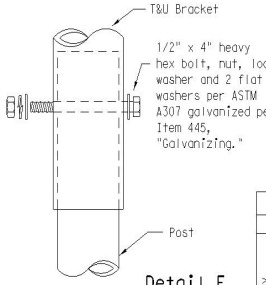

Detail E

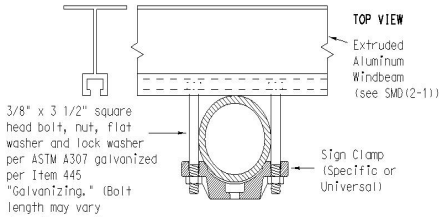

Detail D

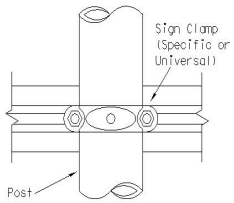

REQUIRED SUPPORT		
	SIGN DESCRIPTION	SUPPORT
Regulatory	48-inch STOP sign (R1-1)	TY 10BWG(1)XX(T) TY 10BWG(1)XX(P-BM)
	60-inch YIELD sign (R1-2)	TY 10BWG(1)XX(T) TY 10BWG(1)XX(P-BM)
	48x16-inch ONE-WAY sign (R6-1)	TY 10BWG(1)XX(T) TY 10BWG(1)XX(P-BM)
	36x48, 48x36, and 48x48-inch signs	TY 10BWG(1)XX(T)
	48x60-inch signs	TY S80(1)XX(T)
Warning	48x48-inch signs (diamond or square)	TY 10BWG(1)XX(T)
	48x60-inch signs	TY S80(1)XX(T)
	48-inch Advance School X-ing sign (S1-1)	TY 10BWG(1)XX(T)
	48-inch School X-ing sign (S2-1)	TY 10BWG(1)XX(T)
	Large Arrow sign (W1-6 & W1-7)	TY 10BWG(1)XX(T)

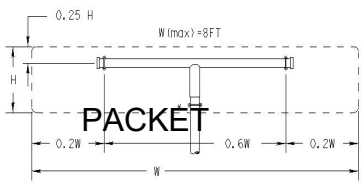

SM RD SGN ASSM TY XXXXX(1)XX(T)
(* - See Note 12)

All dimensions are in english unless detailed otherwise.

FRICTION CAP DETAIL

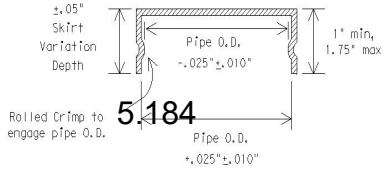

Friction caps may be manufactured from hot rolled or cold rolled steel sheets. The minimum sheet metal thickness shall be 24 gauge for all cap sizes.

The rim edges shall be reasonably straight and smooth. Caps shall be sized and formed in such a manner as to produce a drive-on friction fit and have no tendency to rock when seated on the pipe. The depth shall be sufficient to give positive protection against entrance of rainwater. They shall be free of sharp creases or indentations and show no evidence of metal fracture.

Caps shall have an electrodeposited coating of zinc in accordance with the requirements of ASTM B633 Class FE/ZN 8.

Texas Department of Transportation
Traffic Operations Division

SIGN MOUNTING DETAILS SMALL ROADSIDE SIGNS TRIANGULAR SLIPBASE SYSTEM

SMD(SLIP-2)-08

PACKET 5.184

July 11, 2023

©TxDOT July 2002

9-08 REVISIONS	DN: TxDOT	CK: TxDOT	DW: TxDOT	CK: TxDOT
	CONT	SECT	JOB	HIGHWAY
	.	.	.	.
	DIST	COUNTY		SHEET NO.
	.	.		60

DISCLAIMER: The use of this standard is governed by the "Texas Engineering Practice Act". No warranty of any kind is made by TxDOT for any purpose whatsoever. TxDOT assumes no responsibility for the conversion of this standard to other formats or for incorrect results or damages resulting from its use.

DATE:
FILE:

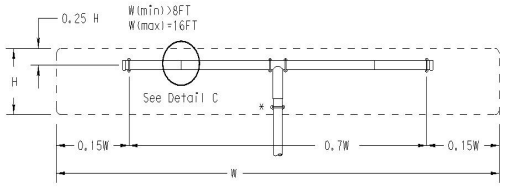

SM RD SGN ASSM TY XXXXX(1)XX(T-2EXT)
(* - See Note 12)

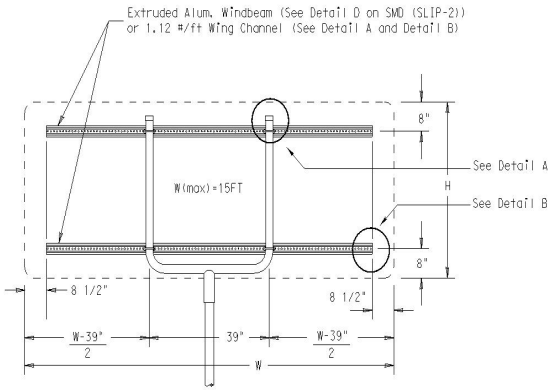

SM RD SGN ASSM TY XXXXX(1)XX(U-XX)

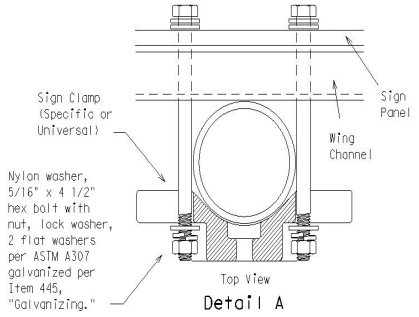

Detail A

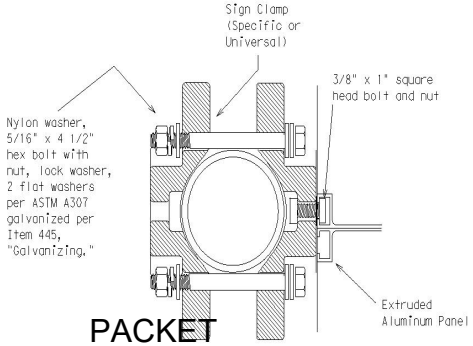

Detail D
EXTRUDED ALUMINUM SIGN WITH T BRACKET

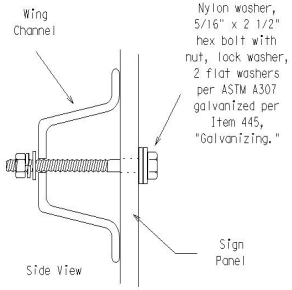

Detail B

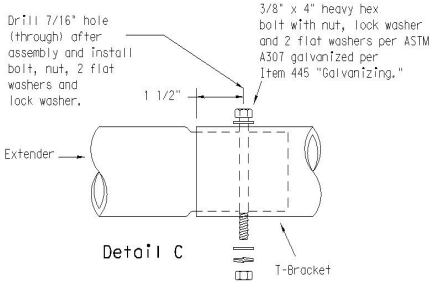

Detail C

Splices shall only be allowed behind the sign substrate.

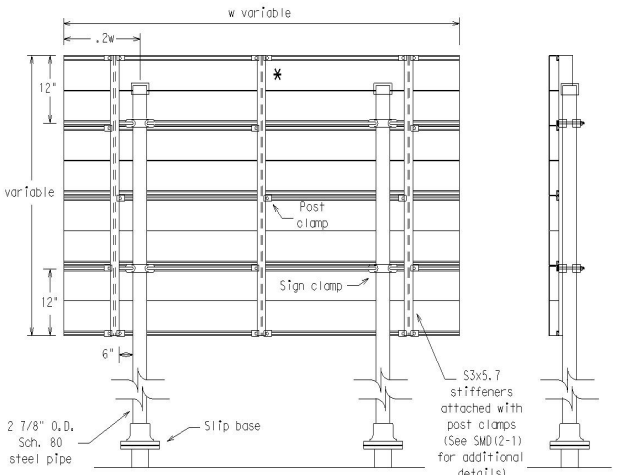

Typical Sign Mount

SM RD SGN ASSM TY S80(2)XX(P-EXAL)

* Additional stiffener placed at approximate center of signs when sign width is greater than 10'.

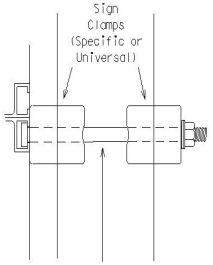

Detail E

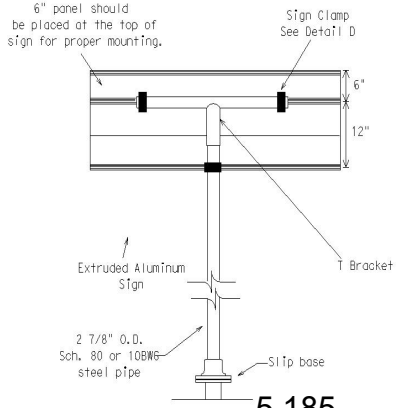

Extruded Aluminum Sign
With T Bracket

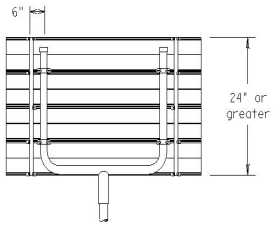

Use Extruded Alum. Windbeam as stiffeners
See SMD (2-1) for additional details

See Detail E
for clamp installation

GENERAL NOTES:

SIGN SUPPORT	# OF POSTS	MAX. SIGN AREA
10 BWG	1	16 SF
10 BWG	2	32 SF
Sch 80	1	32 SF
Sch 80	2	64 SF

2. The Engineer may require that a Schedule 80 post be used in place of a 10 BWG where a sign height is abnormally high due to a fill slope.
3. Sign supports shall not be spliced except where shown. Sign support posts shall not be spliced.
4. Aluminum sign blanks shall conform to Departmental Material Specifications DMS-7110 and shall have the following minimum thicknesses: 0.080 for signs less than 7.5 sq. ft., 0.100 for signs 7.5 to 15 sq. ft., and 0.125 for signs greater than 15 sq. ft.
5. Signs that require specific supports due to reasons in addition to windloading are indicated on the "REQUIRED SUPPORT" table on this sheet.
6. For horizontal rectangular signs fabricated from flat aluminum, T-brackets are used for signs 24 inches or less in height. U-brackets are used for signs of greater height.
7. When two triangular slipbase supports are used to support a single sign, they shall not be "rigidly" connected to each other except through the sign panel. This will allow each support to act independently when impacted by an errant vehicle.
8. Wing channel shall meet ASTM A 1011 SS Gr 50 and be galvanized per ASTM A 123.
9. Excess pipe, wing channel, or windbeam shall be cut off so that it does not extend beyond the sign panel (i.e., excess support shall not be visible when the sign is viewed from the front.) Repair galvanized coating at cut support ends per Item 445, "Galvanizing."
10. Sign blanks shall be the sizes and shapes shown on the plans.
11. Additional sign clamp required on the "T-bracket" post for 24 inch high signs. Place the clamp 3 inches above bottom of sign when possible.
12. Post open ends shall be fitted with Friction Caps.

REQUIRED SUPPORT

	SIGN DESCRIPTION	SUPPORT
Regulatory	48-inch STOP sign (R1-1)	TY 10BWG(1)XX(T) TY 10BWG(1)XX(P-BM)
	60-inch YIELD sign (R1-2)	TY 10BWG(1)XX(T) TY 10BWG(1)XX(P-BM)
	48x16-inch ONE-WAY sign (R6-1)	TY 10BWG(1)XX(T) TY 10BWG(1)XX(P-BM)
	36x48, 48x36, and 48x48-inch signs	TY 10BWG(1)XX(T)
	48x60-inch signs	TY S80(1)XX(T)
Warning	48x48-inch signs (diamond or square)	TY 10BWG(1)XX(T)
	48x60-inch signs	TY S80(1)XX(T)
	48-inch Advance School X-ing sign (S1-1)	TY 10BWG(1)XX(T)
	48-inch School X-ing sign (S2-1)	TY 10BWG(1)XX(T)
	Large Arrow sign (W1-6 & W1-7)	TY 10BWG(1)XX(T)

Texas Department of Transportation
Traffic Operations Division

SIGN MOUNTING DETAILS
SMALL ROADSIDE SIGNS
TRIANGULAR SLIPBASE SYSTEM

SMD(SLIP-3)-08

PACKET
5.185
July 11, 2023

©TxDOT July 2002

DN: TXDOT	CK: TXDOT	DW: TXDOT	CK: TXDOT
9-08 REVISIONS	CONT	SECT	JOB	HIGHWAY
DIST	COUNTY		SHEET NO.
			61

26D

DISCLAIMER:
The use of this standard is governed by the "Texas Engineering Practice Act". No warranty of any kind is made by TxDOT for any purpose whatsoever. TxDOT assumes no responsibility for the conversion of this standard to other formats or for incorrect results or damages resulting from its use.

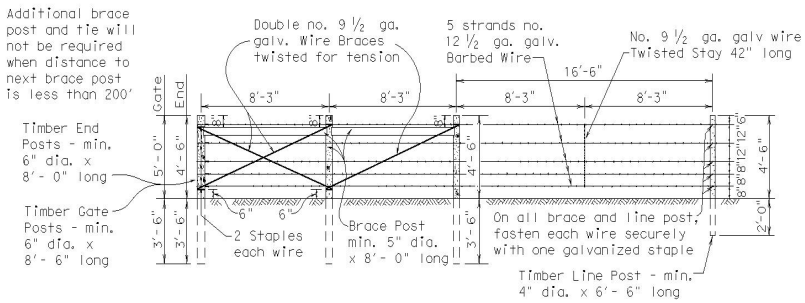

SECTION GALVANIZED BARBED WIRE FENCE WITH WOOD POSTS

Bracing Detail Used at Ends and Gates

TYPE "A" FENCE

(See General Note 6)

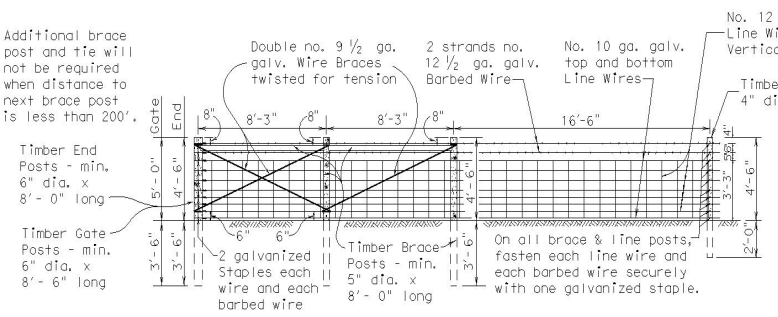

SECTION GALVANIZED WOVEN WIRE FENCE WITH WOOD POSTS

Bracing Detail Used at Ends and Gates

TYPE "B" FENCE

(See General Note 6)

TABLE OF EQUIVALENT SIZES FOR OPTIONAL SHAPE

Minimum Diameter of Round Post (Inches)	Minimum Equivalent Dimension for Each Side of Square Post (Inches)
4	3 ½
5	4 ½
6	5 ¼

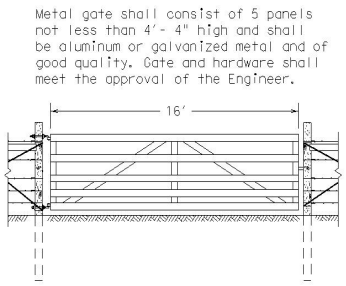

DETAIL TYPE 1 GATE

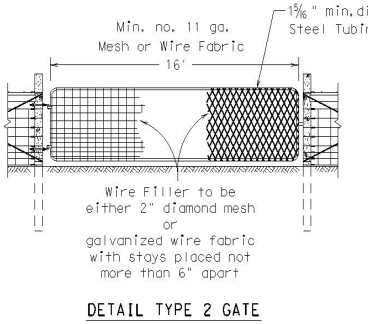

DETAIL TYPE 2 GATE

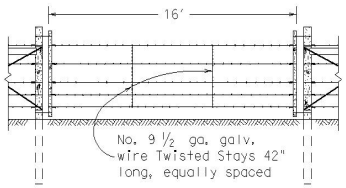

DETAIL TYPE 3 GATE

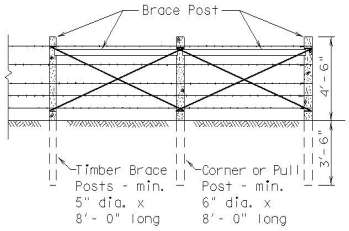

CORNER OR PULL POST ASSEMBLY

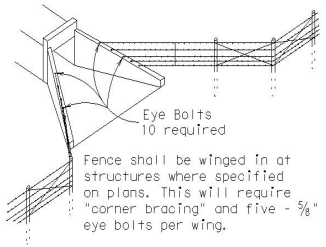

DETAIL OF FENCE TREATMENT AT STRUCTURES

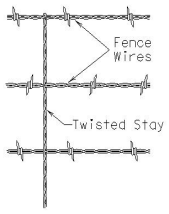

DETAIL OF STAY

(Barbed wire fence)

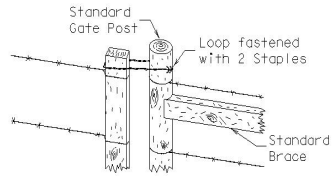

Loop to be made from two strands twisted no. 9 ½ ga. galv. smooth wire, and to be securely fastened to gate post with two galv. staples.

DETAIL FASTENER TYPE 3 GATE

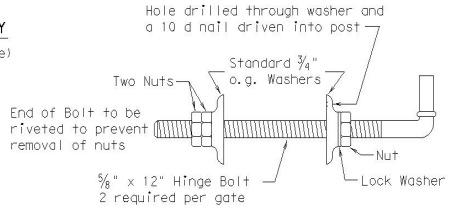

DETAIL OF GATE HINGE BOLT ASSEMBLY

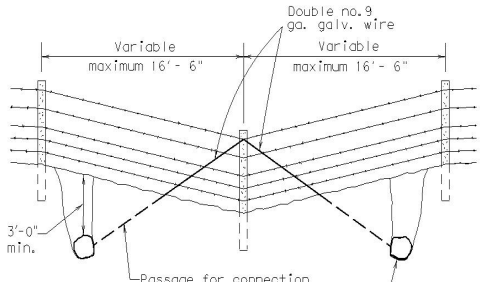

DETAIL OF FENCE SAG

(Single Line Connection)

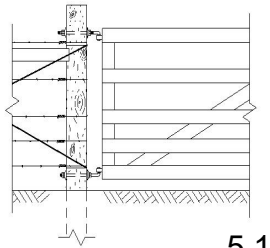

DETAIL SHOWING INSTALLATION OF HINGES OF TYPE 1 & 2 GATE

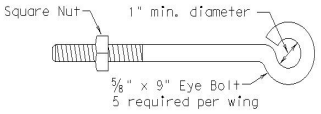

DETAIL OF EYE BOLT

GENERAL NOTES

1. Any high point which interferes with the placing of wire mesh shall be excavated to provide 2" clearance.
2. Latches for Type 1 and Type 2 gates shall be good commercial quality and design latches of the spring, fork or chain type. All latches shall be suitable for the gate and shall be approved by the Engineer.
3. Hinges for Type 2 gates shall be commercial design approved by the Engineer suitable for post and gate.
4. Concrete shall be of the design and consistency approved by the Engineer and shall contain not less than 4 sacks of cement per cubic yard. Concrete footings are to be crowned at the top to shed water.
5. If rock is encountered at a depth less than the embedded depth required, a 15" or larger diameter hole shall be drilled for the post and the post shall be set in concrete. If rock is encountered at a depth of 1'- 6" or more below the ground surface, the hole shall be drilled to the required depth. If rock is encountered at a depth less than 1'- 6" below the ground surface, the holes shall be drilled a minimum of 2'- 0" into the rock or to the depth whichever is the lesser depth.
6. Barbed Wire shall be in accordance with ASTM A 121 (Class 1) Design designation 12-2-4-1 4R or 12-2-5-1 4R, or as approved by the Engineer.

   Woven Wire Fence (Type B) shall be in accordance with ASTM A 116 (Class 1) No. 12-1/2 Grade 60 (See Table 1 ASTM A 116) to the height and design shown on the plans, or as approved by the Engineer.
7. The location of gates and corner posts will be as indicated elsewhere on these plans.
8. Square wood posts may be used in lieu of round posts provided minimum equivalent size requirements, as shown are met. All wood posts shall be in accordance with Item 552, "Wire Fence."

Texas Department of Transportation

Design Division Standard

BARBED WIRE AND WOVEN WIRE FENCE

(WOOD POSTS)

WF(1)-10

FILE: wf110.dgn	DN: TxDOT	CK: AM	DW: VP	CK:
©TxDOT 1994	CONT	SECT	JOB	HIGHWAY
REVISIONS				
	DIST	COUNTY		SHEET NO.
				62

DATE:
FILE:

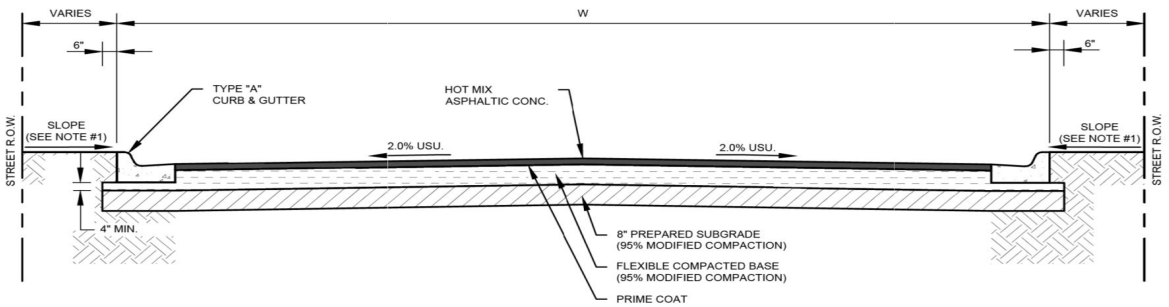

STREET DIMENSIONS			
W (FT)	ASPHALT THICKNESS (IN)	FLEXIBLE COMPACTED BASE THICKNESS (IN)	ASPHALT TYPE
*37	2D	8	TYPE "D"
*41	2D	8	
47	2D & 2C	8	TYPE "D" OVER TYPE "C"
77	2D & 3C	12	
79	2D & 3C	12	
113	2D & 3C	12	
TABLE THICKNESSES SHOWN ARE THE MINIMUM UNLESS OTHERWISE DIRECTED BY THE PLANS.			
* REGARDLESS OF WIDTH, ROADS CLASSIFIED AS COLLECTOR ROADS MUST HAVE 2" TYPE "D" OVER 2" TYPE "C" ASPHALT WITH 8" BASE AND ROADS CLASSIFIED AS ARTERIAL ROADS MUST HAVE 2" TYPE "D" OVER 3" TYPE "C" ASPHALT WITH 12" BASE.			

NOTES:

1. THE MAXIMUM SLOPE OF 1/4" / FT TO BE MEASURED FROM THE TOP OF CURB AND TO APPLY TO THE FULL WIDTH OF THE AREA BETWEEN THE BACK OF CURB AND THE R.O.W.
2. FLEXIBLE COMPACTED BASE TO BE PLACED IN LIFTS NO THICKER THAN 6".
3. WHEN MULTIPLE LAYERS OF ASPHALT ARE PLACED A TACK COAT MUST BE PLACED BETWEEN EACH PAIR OF ASPHALT LAYERS.
4. APPLY TACK COAT TO ALL CONCRETE SURFACES ADJACENT TO ASPHALT SURFACES AND TO ALL EXISTING ASPHALT SURFACES ADJACENT TO NEW ASPHALT SURFACES.
5. MATERIALS AND CONSTRUCTION METHODS TO CONFORM TO THE CITY OF MIDLAND STANDARDS AND SPECIFICATIONS.
6. CONSTRUCT AS SHOWN UNLESS OTHERWISE APPROVED IN WRITING BY THE CITY ENGINEER.

MIDLAND Engineering Services	DRAWN: DPM CHECKED: JCF APPROVED: MCC	EFFECTIVE DATE: 10/01/2018	SCALE: DETAIL:
		STANDARD STREET CROWN CROSS SECTION	201

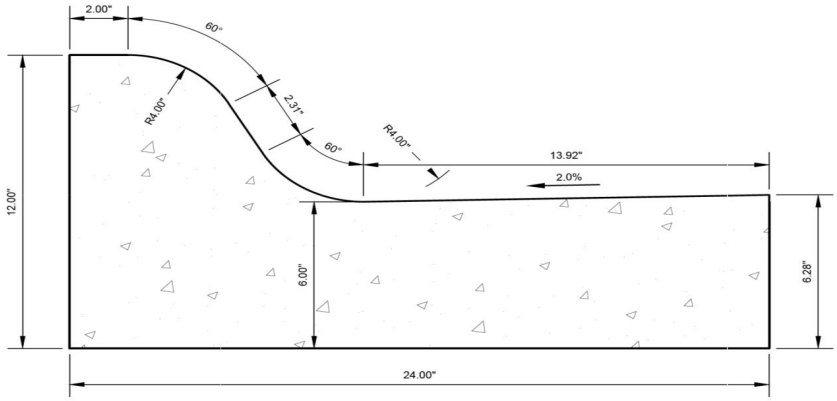

NOTES:

1. CONCRETE TO BE CITY OF MIDLAND CLASS "C", 3600 PSI. USE FIBER REINFORCED CONCRETE PAVEMENT THROUGHOUT.
2. SEAL CONCRETE JOINT AT FACE OF CURB WHEN ADJACENT TO CONCRETE PAVEMENT AND NOT INTEGRAL WITH THAT PAVEMENT.
3. MATERIALS AND CONSTRUCTION METHODS TO CONFORM TO CITY OF MIDLAND STANDARDS AND SPECIFICATIONS.
4. CONSTRUCT AS SHOWN UNLESS OTHERWISE APPROVED IN WRITING BY THE CITY ENGINEER.

MIDLAND Engineering Services	DRAWN: DPM CHECKED: JCF APPROVED: MCC	EFFECTIVE DATE: 10/01/2018	SCALE: NTS DETAIL:
		TYPE A STANDARD CURB AND GUTTER	205

DESIGN	GRAPHICS	CHECK		
DATE: 1/25/2023				
SCALE: AS SHOWN				
SHEET 1 OF 2				
TxDOT PROJECT NUMBER: 064465334				

CITY OF MIDLAND
PAVING STANDARDS

MIDLAND
Fuel the Energy!

Kimley»Horn
F-928
13455 Noel Road
Two Galleria Office Tower, Suite 700
Dallas, Texas 75240
Intl. No. (972) 770-1300
Fax No. (972) 239-3820

DOCUMENT IS FOR INTERIM REVIEW AND NOT INTENDED FOR CONSTRUCTION, BIDDING, OR PERMIT PURPOSES.

THOMAS W. HARTMANN, P.E.
109948
TEXAS SERIAL NO.
1/25/2023
DATE

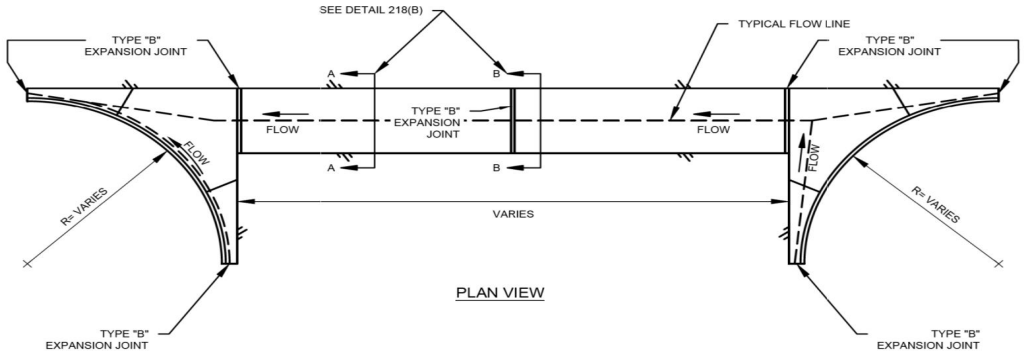

PLAN VIEW

NOTES:

1. CONCRETE TO BE CITY OF MIDLAND CLASS "C", 3600 PSI. USE FIBER REINFORCED CONCRETE PAVEMENT THROUGHOUT.
2. CONCRETE FILLET AREA TO BE PLACED WITH INTEGRAL CURB.
3. SEAL ALL CONCRETE JOINTS.
4. MATERIALS AND CONSTRUCTION METHODS TO CONFORM TO CITY OF MIDLAND STANDARDS AND SPECIFICATIONS.
5. CONSTRUCT AS SHOWN UNLESS OTHERWISE APPROVED IN WRITING BY THE CITY ENGINEER.

DRAWN: DPM	EFFECTIVE DATE: 10/01/2018	SCALE: NTS	DETAIL:
CHECKED: JCF	FILLET AND VALLEY GUTTER		218(A)
APPROVED: MCC			

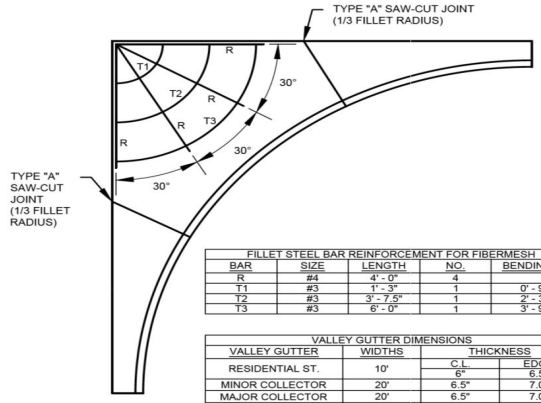

FILLET STEEL BAR REINFORCEMENT FOR FIBERMESH				
BAR	SIZE	LENGTH	NO.	BENDING R.
R	#4	4' - 0"	4	
T1	#3	1' - 3"	1	0' - 9"
T2	#3	3' - 7.5"	1	2' - 3"
T3	#3	6' - 0"	1	3' - 9"

VALLEY GUTTER DIMENSIONS			
VALLEY GUTTER	WIDTHS	THICKNESS	
		C.L.	EDGE
RESIDENTIAL ST.	10'	6"	6.5"
MINOR COLLECTOR	20'	6.5"	7.0"
MAJOR COLLECTOR	20'	6.5"	7.0"
MINOR ARTERIAL	20'	7.5"	8.0"
MAJOR ARTERIAL	SEE PLANS		
VALLEY GUTTER WIDTH BASED ON CATEGORY OF STREET BEING CROSSED			

FILLET DIMENSIONS				
BACK OF CURB RADIUS	FILLET AREAS (90°)			CURB LENGTH
	COMPUTING R.	AREA S.F.	AREA S.Y.	L.F.
8	10	21.46	2.38	12.56
12	14	42.06	4.67	18.85
15	17	62.01	6.89	23.56
18	20	85.84	9.54	28.27
20	22	103.86	11.54	31.42
25	27	156.44	17.38	39.27
30	32	219.75	24.42	47.12
35	37	293.79	32.64	54.98
40	42	378.56	42.06	62.83
45	47	474.06	52.67	70.69
50	52	580.28	64.48	78.54

TYPICAL SECTION A - A
SEE DETAIL 218(A)

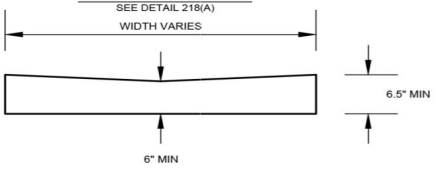

JOINT SECTION B - B
SEE DETAIL 218(A)

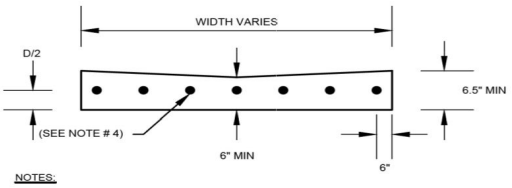

NOTES:

1. WHEN FILLET AREA IS TO BE PAVED WITH 8" THICK CONCRETE THE BOTTOM OF THE CURB AND GUTTER WILL BE EXTENDED TO MATCH THE FILLET THICKNESS.
2. USE FIBER REINFORCED CONCRETE THROUGHOUT VALLEY GUTTER.
3. STEEL BAR REINFORCEMENT TO BE USED IN FILLET, BUT NOT IN VALLEY GUTTER. STEEL BAR REINFORCEMENT TO BE PLACED AT THE BOTTOM 1/3 POINT OF SLAB CONCRETE ON GRADE AND TO HAVE A MINIMUM COVER OF 2" WHEN USED.
4. UTILIZE SMOOTH DOWEL RODS CENTERED ON THE VALLEY GUTTER JOINT, EVENLY SPACED AT 12" INTERVALS FOR THE FULL WIDTH OF THE VALLEY GUTTER.
5. SEAL ALL CONCRETE JOINTS.
6. MATERIALS AND CONSTRUCTION METHODS TO CONFORM TO CITY OF MIDLAND STANDARDS AND SPECIFICATIONS.
7. CONSTRUCT AS SHOWN UNLESS OTHERWISE APPROVED IN WRITING BY THE CITY ENGINEER.

DRAWN: DPM	EFFECTIVE DATE: 10/01/2018	SCALE: NTS	DETAIL:
CHECKED: JCF	FILLET AND VALLEY GUTTER		218(B)
APPROVED: MCC			

CITY OF MIDLAND
PAVING STANDARDS

SHEET 2 OF 2
NUMBER: 064465334

DESIGN | GRAPHICS | CHECK
DATE: 1/25/2023
SCALE: AS SHOWN

Kimley»Horn
Texas Firm #928
13455 Noel Road
Two Galleria Office Tower, Suite 700
Dallas, Texas 75240
Tel No. (972) 770-1300
Fax No. (972) 239-3820

DOCUMENT IS FOR INTERIM REVIEW AND NOT INTENDED FOR CONSTRUCTION, BIDDING, OR PERMIT PURPOSES.
THOMAS W. HARTMANN, P.E.
109948
TEXAS SERIAL NO.
1/25/2023
DATE

METHOD OF AWARDING THE CONTRACT

The City of Midland (the "City") reserves the right to reject any or all bids submitted and not make an award. The City also reserves the privilege of accepting any item as a separate contract or the combination of items of a contract. If the contract is awarded, it will be awarded to the lowest responsible bidder. In determining who is the lowest responsible bidder, the City shall consider each bidder's price and whether the Texas Department of Transportation ("TxDOT") has determined that the bidder is currently a prequalified contractor qualified under confidential questionnaire. *See* TxDOT Contractor Prequalification - https://www.txdot.gov/business/contractors/contractor-prequalification.html; TxDOT list of prequalified contractor qualified under confidential questionnaire - https://www.txdot.gov/insdtdot/orgchart/cmd/cserve/pqlist/PqListA.htm. Whether TxDOT has determined that a bidder is currently a prequalified contractor qualified under any other questionnaire will not be a criterion that is considered. A bidder shall include with the bid a certification that TxDOT has or has not determined that the bidder is currently a prequalified contractor qualified under confidential questionnaire. Certification that TxDOT has determined that a bidder is so prequalified shall be subject to verification by the City. If a bidder fails to provide such certification with the bid, it shall be presumed that TxDOT has not determined that the bidder is so prequalified. The lowest responsible bidder shall be the bidder who bid the lowest price who TxDOT has determined is currently a prequalified contractor qualified under confidential questionnaire, provided that there is at least one bidder who is so prequalified; otherwise, the lowest responsible bidder shall be the bidder who bid the lowest price.

BY SUBMITTING A BID, A BIDDER CERTIFIES THAT THE BIDDER HAS REVIEWED, UNDERSTANDS, ACCEPTS, AND AGREES TO THE FOREGOING METHOD OF AWARDING THE CONTRACT.

PAY NOTES

Unless otherwise directed, all items shall conform to Texas Department of Transportation TxDOT specifications.

Item AA2-2 INSTALLATION OF TRAFFIC SIGNALS are separate lump sum items for the intersection.

It includes all work related to the installation of new traffic signal as necessary to provide a fully functioning traffic signal in accordance with the plans and specifications, including installing new equipment and infrastructure as called for in the plans, with minor field adjustments as would be considered normal and customary for work of this type.

Note that sawcutting, excavation, furnishing, installing, backfilling, and permanent asphalt patching for underground conduit is included in this pay item.

Payment for Items C2 will be made on monthly invoices as a percentage of the lump sum bid amount at pre-defined milestones for each intersection, as follows:

- **30% payment** to be made upon completion of all underground infrastructure placement, to include all pole foundations, conduit, and ground boxes.
- **30% payment** to be made upon completion of the standing of all poles and posts, to include mounting and cabling of signal displays.
- **40% payment** to be made upon completion of all signal-related work, to include activation of the signal in three-color operation and acceptance by the City.

Item BB70, AA1-74, and AA2-3 OWNER'S ALLOWANCE, is intended to allow for the City to adjust or expand the scope of work as needed based on field conditions or conflicts that may arise. Any work to be paid under this item MUST be authorized in advance, in writing, by the City. This is an allowance for additional work only, and no amount of work under this item is guaranteed.

IMPORTANT NOTICE

Conflict Of Interest Reporting Requirements

Compliance with LOCAL GOVERNMENT CODE TITLE 5. MATTERS AFFECTING PUBLIC OFFICERS AND EMPLOYEES SUBTITLE C. MATTERS AFFECTING PUBLIC OFFICERS AND EMPLOYEES OF MORE THAN ONE TYPE OF LOCAL GOVERNMENT CHAPTER 176. DISCLOSURE OF CERTAIN RELATIONSHIPS WITH LOCAL GOVERNMENT OFFICERS; PROVIDING PUBLIC ACCESS TO CERTAIN INFORMATION.

Form CIQ: This questionnaire reflects changes made to the law by H.B. 23, 84th Leg., Regular Session. This questionnaire shall be filed in accordance with Chapter 176, Local Government Code, by a vendor who has a business relationship as defined by Section 176.001(1-a) with a local governmental entity and the vendor meets requirements under Section 176.006(a). By law this questionnaire must be filed with the records administrator of the local governmental entity not later than the 7th business day after the date the vendor becomes aware of facts that require the statement to be filed. See Section 176.006(a-1), Local Government Code. A vendor commits an offense if the vendor knowingly violates Section 176.006, Local Government Code. An offense under this section is a misdemeanor.

Bidders are responsible for filing Conflict of Interest form "CIQ" in accordance with the above referenced statute. Failure to do so is a class C Misdemeanor. Contracts or Purchase Orders awarded to a vendor that has violated this law is subject to termination at such time that the violation is discovered with no recourse to the City of Midland. The bidder will be subsequently removed from the bidders list for a minimum of one year.

When there is no known conflict of interest as defined by the statute, it is not necessary to file/submit the Form CIQ. The form must be submitted if a conflict is subsequently discovered.

By submitting a response to this request, vendor represents that it complies with the requirements of Chapter 176 of the Texas Local Government Code.

For a current list of the local government officers go to: http://www.midlandtexas.gov/

Upon completion of the form, sign and submit with bid or mail to:

City of Midland
Attn: City Secretary
PO Box 1152
Midland, Texas 79702

CONFLICT OF INTEREST QUESTIONNAIRE

FORM CIQ

For vendor doing business with local governmental entity

This questionnaire reflects changes made to the law by H.B. 23, 84th Leg., Regular Session.

This questionnaire is being filed in accordance with Chapter 176, Local Government Code, by a vendor who has a business relationship as defined by Section 176.001(1-a) with a local governmental entity and the vendor meets requirements under Section 176.006(a).

By law this questionnaire must be filed with the records administrator of the local governmental entity not later than the 7th business day after the date the vendor becomes aware of facts that require the statement to be filed. *See* Section 176.006(a-1), Local Government Code.

A vendor commits an offense if the vendor knowingly violates Section 176.006, Local Government Code. An offense under this section is a misdemeanor.

OFFICE USE ONLY

Date Received

1 **Name of vendor who has a business relationship with local governmental entity.**

Willis Electric Co LP

2 ☐ **Check this box if you are filing an update to a previously filed questionnaire.** (The law requires that you file an updated completed questionnaire with the appropriate filing authority not later than the 7th business day after the date on which you became aware that the originally filed questionnaire was incomplete or inaccurate.)

3 **Name of local government officer about whom the information is being disclosed.**

_____

Name of Officer

4 **Describe each employment or other business relationship with the local government officer, or a family member of the officer, as described by Section 176.003(a)(2)(A). Also describe any family relationship with the local government officer. Complete subparts A and B for each employment or business relationship described. Attach additional pages to this Form CIQ as necessary.**

A. Is the local government officer or a family member of the officer receiving or likely to receive taxable income, other than investment income, from the vendor?

☐ Yes ☐ No

B. Is the vendor receiving or likely to receive taxable income, other than investment income, from or at the direction of the local government officer or a family member of the officer AND the taxable income is not received from the local governmental entity?

☐ Yes ☐ No

5 **Describe each employment or business relationship that the vendor named in Section 1 maintains with a corporation or other business entity with respect to which the local government officer serves as an officer or director, or holds an ownership interest of one percent or more.**

6 ☐ Check this box if the vendor has given the local government officer or a family member of the officer one or more gifts as described in Section 176.003(a)(2)(B), excluding gifts described in Section 176.003(a-1).

7

Tommy Willis, President of Roy Willis Electric Co., Inc., General Partner — 5.15.23

Signature of vendor doing business with the governmental entity — Date

CONFLICT OF INTEREST QUESTIONNAIRE
For vendor doing business with local governmental entity

A complete copy of Chapter 176 of the Local Government Code may be found at http://www.statutes.legis.state.tx.us/Docs/LG/htm/LG.176.htm. For easy reference, below are some of the sections cited on this form.

Local Government Code § 176.001(1-a): "Business relationship" means a connection between two or more parties based on commercial activity of one of the parties. The term does not include a connection based on:

(A) a transaction that is subject to rate or fee regulation by a federal, state, or local governmental entity or an agency of a federal, state, or local governmental entity;

(B) a transaction conducted at a price and subject to terms available to the public; or

(C) a purchase or lease of goods or services from a person that is chartered by a state or federal agency and that is subject to regular examination by, and reporting to, that agency.

Local Government Code § 176.003(a)(2)(A) and (B):

(a) A local government officer shall file a conflicts disclosure statement with respect to a vendor if:

***

(2) the vendor:

(A) has an employment or other business relationship with the local government officer or a family member of the officer that results in the officer or family member receiving taxable income, other than investment income, that exceeds $2,500 during the 12-month period preceding the date that the officer becomes aware that

(i) a contract between the local governmental entity and vendor has been executed; or

(ii) the local governmental entity is considering entering into a contract with the vendor;

(B) has given to the local government officer or a family member of the officer one or more gifts that have an aggregate value of more than $100 in the 12-month period preceding the date the officer becomes aware that:

(i) a contract between the local governmental entity and vendor has been executed; or

(ii) the local governmental entity is considering entering into a contract with the vendor.

Local Government Code § 176.006(a) and (a-1)

(a) A vendor shall file a completed conflict of interest questionnaire if the vendor has a business relationship with a local governmental entity and:

(1) has an employment or other business relationship with a local government officer of that local governmental entity, or a family member of the officer, described by Section 176.003(a)(2)(A);

(2) has given a local government officer of that local governmental entity, or a family member of the officer, one or more gifts with the aggregate value specified by Section 176.003(a)(2)(B), excluding any gift described by Section 176.003(a-1); or

(3) has a family relationship with a local government officer of that local governmental entity.

(a-1) The completed conflict of interest questionnaire must be filed with the appropriate records administrator not later than the seventh business day after the later of:

(1) the date that the vendor:

(A) begins discussions or negotiations to enter into a contract with the local governmental entity; or

(B) submits to the local governmental entity an application, response to a request for proposals or bids, correspondence, or another writing related to a potential contract with the local governmental entity; or

(2) the date the vendor becomes aware:

(A) of an employment or other business relationship with a local government officer, or a family member of the officer, described by Subsection (a);

(B) that the vendor has given one or more gifts described by Subsection (a); or

(C) of a family relationship with a local government officer.

CITY OF MIDLAND

Consideration of Location of Bidder's Principal Place of Business
For Bids of $50,000 up to $100,000 for Services and $500,000 for Commodities
Affidavit of Eligibility

Pursuant to Texas Local Government Code 271.9051, in purchasing real property, personal property that is not affixed to real property, or services, if the City receives one or more bids from a bidder whose principal place of business is in the City of Midland and whose bid is within five percent (5%) of the lowest bid price received by the City from a bidder who is not a resident of the City of Midland, the City may enter into a contract with:

(1) the lowest bidder; or

(2) the bidder whose principal place of business is in the City of Midland if the City Council determines, in writing, that the local bidder offers the City the best combination of contract price and additional economic development opportunities for the City of Midland created by the contract award, including the employment of residents of the City of Midland and increased tax revenues to the City of Midland.

In order to receive consideration, bidders must submit this affidavit to:

Erika Martinez
Purchasing Manager
City of Midland
300 N. Loraine St.,
PO BOX 1152
Midland, TX 79702-1152

Complete all areas below. Incomplete affidavits may be rejected.

Local Business Name: _____

Local Address (must be within the City limits): _____

1. Is the above address the principal place of business for the business named above? ☐ Yes ☐ No
2. How many residents of the City of Midland are employed at the above business location? _____
3. Year your business was established in the City of Midland: _____
4. If you collect sales tax for ANY class of customer, provide the following Reseller information:

   Reseller Permit Number: _____

   Company Name and Address (as it appears on permit):

   _____

   _____

   _____

5. Does your business have more than one office in the State of Texas? ☐ Yes ☐ No
   If Yes, identify the office location considered as the point-of-sale for the purpose of sales tax calculation:

   _____

   _____

6. Was the local business required to pay business and/or real property tax for the most recent tax year?

   ☐ Yes ☐ No

   If Yes, did the local business pay any of this tax to the City of Midland? ☐ Yes ☐ No

Under penalty of perjury, the undersigned states that the foregoing statements are true and correct. It is further acknowledged that any person, firm, corporation or entity intentionally submitting false information to the City in an attempt to qualify for eligibility shall be prohibited from bidding on City of Midland products and services for a period of one (1) year.

Authorized Signature: _____ Date: _____

Printed Name and Title: _____

NOTICE TO BIDDERS

IF THIS PURCHASE REQUIRES A CONTRACT, THE ATTACHED **CONTRACT AND INSURANCE REQUIREMENTS ARE NON-NEGOTIABLE**. MODIFICATIONS BY BIDDER/COMPANY OF ANY MATERIAL TERM(S) TO THE CONTRACT DOCUMENTS WILL BE DEEMED A NON-RESPONSIVE BID. NON-RESPONSIVE BIDS WILL BE REJECTED. BIDDER/COMPANY MUST BE WILLING TO SIGN THE CONTRACT AS IS AND WITHOUT MODIFICATIONS, PROVIDE PROPERLY EXECUTED BONDS (IF APPLICABLE) AND PROVIDE INSURANCE SPECIFICALLY AS REQUIRED WITHIN THE CONTRACT DOCUMENTS **WITHIN 21 DAYS** OF THE DATE OF THE TRANSMITTAL LETTER.

IF THE SELECTED BIDDER/COMPANY CANNOT MEET THE ABOVE REQUIREMENTS, THEN **THE CITY RESERVES THE RIGHT TO AWARD THIS PURCHASE TO ANOTHER BIDDER**.

IMPORTANT NOTICE – IF THE CONTRACT DOCUMENTS REQUIRE WORKER'S COMPENSATION INSURANCE, BIDDER/COMPANY MUST CARRY WORKER'S COMPENSATION INSURANCE TO BE ELIGIBLE FOR THIS CONTRACT. IF YOU CANNOT PROVIDE WORKER'S COMPENSATION INSURANCE AS REQUIRED BY STATE OF TEXAS STATUTE, WE RESPECTFULLY REQUEST THAT YOU "NO BID" THIS WORK.

COMPLIANCE: Company agrees that it shall comply with Texas Government Code Section 2252.908, *et seq.*, as amended. Company agrees that it shall comply with Texas Local Government Code Section 176.006, *et seq.*, as amended. For further instructions on how to comply with Texas Government Code Section 2252.908 and Texas Local Government Code Section 176.006,

please go to https://www.ethics.state.tx.us/whatsnew/elf_info_form1295.htm and https://www.ethics.state.tx.us/filinginfo/conflict_forms.htm.

ANY VENDOR WHO FAILS TO COMPLY WITH THE TERMS OF THE AWARD **MAY BE DECLARED AN IRRESPONSIBLE VENDOR**. BIDS SUBMITTED BY SAID VENDOR SHALL NOT BE CONSIDERED AGAIN FOR A MINIMUM PERIOD OF SIX MONTHS AS DETERMINED BY THE CITY MANAGER.

IMPORTANT: READ CAREFULLY BEFORE MAKING BID
GENERAL CONDITIONS OF BIDDING

1. All bids are to be submitted as specified in the procurement document(s).

2. Each Bidder is requested to provide: Descriptive literature clearly marked to show each item on this bid. Any catalog or manufacturer's reference in this proposal is descriptive, but not restrictive, and is used only to indicate type and quality. If, however, the bidder proposes similar but not identical terms, he must furnish all particulars. If no mention is made of any exceptions, it is assumed that he is bidding on the article specified and not on an approved equal and he will be required to deliver exact article specified.

3. Prices should be itemized. (Indicate unit price and extend to show total price.) In case of discrepancy between the unit price and the extension, the unit price shall govern.

4. Unit price for each item offered shall include all discounts; e.g., trade, seasonal, etc. with net 30 days payment terms. Discounts shall not be shown as such but shall be incorporated in the base bid price. Any bid showing discounts will be considered an alternate bid. The City of Midland will not be responsible for any goods delivered without a purchase order number.

5. If the Contract is awarded, it will be awarded to either the lowest responsible bidder, or to the bidder who provides goods or services at the best value for the City of Midland. In determining the best value for the City of Midland, the City of Midland may consider the criteria enumerated in Section 252.043 of the Texas Local Government Code. The City of Midland reserves the right to award by item or by total bid, or to reject any or all bids or parts of bids. Further, the City of Midland reserves all rights granted by Section 271.027 of the Texas Local Government Code. The City of Midland reserves the right to award the bid to the lowest responsible bidder.

6. Time of proposed delivery shall be stated in number of calendar days.

7. NOTE: The City of Midland, Texas is exempt from all Federal, State and City tax. Please do not include these taxes in your bid price or invoice. Taxable items must be so designated, and the City will supply vendor with a Tax Exemption Certificate, properly executed.

8. All items are to be delivered, unloaded and stacked at the location indicated on the Bid Request and Purchase Order.

9. All items are to be delivered F.O.B. to the City of Midland, Texas with freight prepaid and included in the bid.

10. Detailed specifications rule over General specifications (headings, etc.)

11. The City of Midland reserves the right to remove a company from the bid list for (1) continued failure to respond to request for bids, (2) failure to deliver merchandise within promised time, or (3) delivery of substandard merchandise.

12. No officer or employee of the City shall have a financial interest, direct or indirect, in any contract with the City, or be financially interested, directly or indirectly, in the sale to the City of any lands, materials, supplies or services except as allowed under chapter 176 of the Local Government Code. Form CIQ shall be submitted and placed on file with the City of Midland.

13. The City shall determine the most advantageous bid for the City and accept the proposal of the responsible party submitting the lowest and/or most advantageous bid or reject any and all bids.

14. The City of Midland, Texas may consider as informal any bid not prepared and submitted in accordance with the provisions hereof, and may waive, in its sole discretion, any informalities.

15. Public Information. To the extent that Bidder is submitting a bid for a contract described by Section 552.371 of the Texas Government Code, Bidder agrees as follows in accordance with Section 552.372(b) of the Texas Government Code: The requirements of Subchapter J, Chapter 552, Government Code, may apply to this bid, and the contractor or vendor agrees that the contract can be terminated if the contractor or vendor knowingly or intentionally fails to comply with a requirement of that subchapter.

STANDARD PURCHASE TERMS AND CONDITIONS
PURCHASING DIVISION, CITY OF MIDLAND, TEXAS

"Seller", as used herein, has the same meaning as "Company". "Buyer", as used herein, has the same meaning as "City".

Seller and Buyer agree as follows:

1. SELLER TO PACKAGE GOODS - Seller will package goods in accordance with good commercial practice. Each shipping container shall be clearly and permanently marked as follows; (a) Seller's name and address, (b) Consignee's name, and address, and purchase order number, (c) Container number and total number of containers, e.g. box 1 of 4 boxes, and (d) the number of the container bearing the packing slip. Seller shall bear cost of packaging unless otherwise provided. Goods shall be suitably packed to secure lowest transportation costs and to conform with requirements of common carriers and any applicable specifications. Buyer's count or weight shall be final and conclusive on shipments not accompanied by packing lists.

2. SHIPMENT UNDER RESERVATION PROHIBITED - Seller is not authorized to ship the goods under reservation and no tender of a bill of lading will serve as a tender of goods.

3. TITLE & RISK OF LOSS - The title and risk of loss of the goods shall not pass to Buyer until Buyer actually receives and takes possession of the goods at the point or points of delivery in Midland, Texas.

4. NO REPLACEMENT OF DEFECTIVE TENDER - Every tender or delivery of goods must fully comply with all provisions of this contract as to time of delivery, quality and the like. If a tender is made which does not fully conform, this shall constitute a breach and Seller shall not have the right to substitute a conforming tender, provided, where the time for performance has yet expired, the Seller may reasonably notify Buyer of his intention to cure and may then make a conforming tender within the contract time but not afterward.

5. PLACE OF DELIVERY - The place of delivery shall be that set forth in the block of the purchase order entitled "deliver to".

6. INVOICES - Seller shall submit separate ORIGINAL invoices, on each purchase order. Invoices shall indicate the purchase order number. All invoices must be mailed to City of Midland, Accounts Payable, P.O. Box 1152, Midland, TX 79702-1152. Payment will be made within 30 days from the date the invoice and properly executed receiving documents are received by City of Midland, Accounts Payable at the above address. Invoices sent to any other address will delay payment.

7. GRATUITIES - The buyer may, by written notice to the seller, cancel this contract without liability to Seller, if it is determined by Buyer that gratuities, in the form of entertainment, gifts, or otherwise, were offered or given by the seller, or any agent or representative of the Seller, to any officer or employee of the City of Midland with a view toward securing a contract or securing favorable treatment with respect to performing of such a contract. In the event this contract is cancelled by Buyer pursuant to this provision, Buyer shall be entitled, in addition to any other rights and remedies, to recover or withhold the amount of the cost incurred by Seller in providing such gratuities.

8. WARRANTY - PRICE -

a. The price to be paid by the Buyer shall be that contained in Seller's bid which Seller warrants to be no higher than Seller's current prices on order by others for products of the kind and specifications covered by this agreement for similar quantities under similar or like conditions and methods of purchase. In the event Seller breaches this warranty, the prices of the items shall be reduced to the Seller's current prices on order by others, or in the alternative, Buyer may cancel this contract without liability to Seller for breach or Seller's actual expense.

b. The Seller warrants that no person or selling agency has been employed or retained to solicit or secure this contract upon an agreement or understanding for commission, percentage, brokerage, or contingent fee excepting bona fide employees or bona fide established commercial or selling agencies maintained by the Seller for the purpose of securing business. For breach or violation of this warranty the Buyer shall have the right or rights to cancel this contract without liability and to deduct from the contract price, or otherwise recover the full amount of such commission, percentage, brokerage or contingent fee.

9. WARRANTY - PRODUCT - Seller shall not limit or exclude any implied warranties and any attempt to do so shall render this contract voidable at the option of the Buyer. Seller warrants that the goods furnished will conform to the specification, drawings, and description listed in the bid invitation, and to the sample(s) furnished by Seller, if any. In the event of a conflict between the specifications, drawings and descriptions, the specifications shall govern.

10. SAFETY WARRANTY - Seller warrants that the product sold to Buyer shall conform to the standards promulgated by the U.S. Department of Labor under the Occupational Safety and Health Act of 1970. In the event the product does not conform to OSHA standards, Buyer may return the product for correction or replacement at the Seller's expense. In the event Seller fails to make the appropriate correction within a reasonable time, correction made by buyer will be at Seller's expense.

11. RIGHT OF INSPECTION - Buyer shall have the right to inspect the goods at delivery before accepting them.

12. CANCELLATION - Buyer shall have the right to cancel for default all or any part of the undelivered portion of this order if Seller breached any of the terms hereof including warranties of Seller if the Seller becomes insolvent or commits acts of bankruptcy. Such right of cancellation is in addition to and not in lieu of any other remedies which Buyer may have in law or equity.

13. TERMINATION - The performance of work under this order may be terminated in whole, or in part by the Buyer in accordance with this provision. Termination of work hereunder shall be effected by the delivery to Seller of a "Notice of Termination" specifying the extent to which performance of work under the order is terminated and the date upon which such termination becomes effective. Such right of termination is in addition to and not in lieu of the rights of Buyer set forth in Clause 13, herein.

14. FORCE MAJEURE - Neither party shall be held responsible for losses, resulting if the fulfillment of any terms or provisions of this contract is delayed or prevented by any cause not within the control of the party whose performance is interfered with, and which by the exercise of reasonable diligence said party is unable to prevent.

15. ASSIGNMENT - DELEGATION - No right or interest in this contract shall be assigned or delegation of any obligation made by Seller without the written permission of the Buyer. Any attempted assignment or delegation by the Seller shall be wholly void and totally ineffective for all purposes unless made in conformity with this paragraph.

16. MODIFICATIONS - This contract can be modified or rescinded only by a writing signed by both of the parties or their duly authorized agents.

17. INTERPRETATION - PAROL EVIDENCE - This writing, plus any specifications for bids and performance provided by Buyer in its advertisement for bids, is intended by the parties as a final expression of this agreement. No course of prior dealings between the parties and no usage of the trade shall be relevant to supplement or explain any term used in this agreement. Acceptance or acquiescence in a course of performance rendered under this agreement shall not be relevant to determine the meaning of this agreement even though the accepting or acquiescing party has knowledge of the performance and opportunity for objection. Whenever a term defined by the Uniform Commercial Code is used in this agreement, the definition contained in the Code is to control.

18. ADVERTISING - Seller shall not advertise or publish without Buyer's prior consent the fact that Buyer has entered into the contract, except to the extent necessary to comply with proper requests for information from an authorized representative of the federal, state or local government.

19. RIGHT TO ASSURANCE - Whenever one party to the contract in good faith has reason to question the other party's intent to perform he may demand that the other party give written assurance of this intent to perform. In the event that a demand is made and no assurance is given within five (5) days, the demanding party may treat this failure as an anticipatory repudiation of the contract.

20. PROTECTION AGAINST ROYALTIES OR PATENT INFRINGEMENT - The Seller shall pay all royalties and license fees, and shall provide for the use of any design, device, material or process covered by letters patent or copyright by suitable legal agreement with Patentee or Owner thereof. The Seller shall defend all suits or claims for infringement of any patent or copyrights and shall indemnify and save the Buyer harmless from any loss on account thereof, except that Buyer shall defend all such suits and claims and shall be responsible for all such loss when a particular design, device, material or process is allowed to the Seller, the Seller shall indemnify and save Buyer harmless from any loss on account thereof. If the material or process specified or required by Buyer is an infringement, the Seller shall be responsible for such loss unless he promptly gives written notice to the buyer of such infringement.

21. TIME - It is hereby expressly agreed and understood that time is of the essence for the performance of this contract, and any failure by contract to meet the time specifications of this agreement will cause Seller to be in default of this agreement.

22. TAX - The City of Midland is exempt from all Federal, State and City tax. Please do not include these taxes in your bid price or invoice. Taxable items must be so designated, and the City will supply vendor with a Tax Exemption Certificate, properly executed.

23. **INSURANCE –**

The following provisions apply unless the agreement is for the supply of goods only:

Seller shall at all times during the term of this agreement maintain and keep in full force and effect insurance in the following types and minimum amounts with companies authorized to do business in the State of Texas:

Commercial General Liability (including Contractual liability):	
-Personal Injury:	$1,000,000.00 per person
	$1,000,000.00 per occurrence
-Property Damage:	$500,000.00 per occurrence
Business Automobile Liability:	$250,000.00 combined single limit - Personal Injury and Property Damage
Worker's Compensation:	Statutory limits
Employers' Liability:	$500,000.00 per accident or occurrence

The Commercial General Liability shall be on a per project or policy aggregate, including completed operations, and shall be on an occurrence basis.

The Workers' Compensation coverage provided by Seller shall inure to the benefit of employees injured during the course and scope of their employment by Seller pursuant to this agreement.

The Business Automobile Liability insurance provided by Seller shall cover any auto for bodily injury and property damage, including owned vehicles, hired and non-owner vehicles, and employee non-ownership, and the amount of such policy shall be a minimum of $250,000.00 covering any vehicle used for the execution of the work that is the subject of this agreement.

All insurance required pursuant to this agreement, except for Worker's Compensation Insurance, shall name the Buyer as an additional insured on a claims occurred basis. All insurance required pursuant to this agreement, including Worker's Compensation Insurance, shall provide for a waiver of subrogation as to the Buyer.

The parties agree that, prior to the execution of the agreement, Seller shall provide one or more certificates of insurance showing that the requirements of this article have been met, and specifically containing, without limitations, the following endorsement:

"The City of Midland is included as an additional insured, on a claims occurred basis, on all policies except for Worker's Compensation. The Seller and Insurer hereby waive all rights of subrogation with respect to claims against the City of Midland, its agents, employees and officers, on all policies of insurance."

Buyer shall be provided the notice by Seller's insurance provider not later than thirty (30) days prior to any reduction or termination of such coverage. Buyer shall not be required to provide any insurance whatsoever pursuant to this agreement.

Seller shall contractually require all contractors, subcontractors, and sub-subcontractors that work on any portion of the work that is the subject of this agreement to obtain insurance coverage that meets or exceeds the policy requirements and minimum amounts specified herein. All contractors, subcontractors, and sub-subcontractors shall obtain insurance policies that provide blanket waivers of subrogation in favor of the City of Midland and policies that name the City of Midland as an additional insured on a claims occurred basis (except workers compensation).

24. ASSIGNMENT - Seller shall not, either directly or indirectly, assign all or any part of this agreement or any interest, right or privilege herein, without the prior written consent of the Buyer. The issue on whether or not to grant consent to an assignment is in the sole discretion of the Buyer.

25. RELEASE - NOTWITHSTANDING ANY OTHER PROVISIONS, SELLER HEREBY RELEASES, ACQUITS, RELINQUISHES AND FOREVER DISCHARGES BUYER, BUYER'S EMPLOYEES AND OFFICERS, FROM ANY AND ALL DEMANDS, CLAIMS, DAMAGES, OR CAUSES OF ACTION OF ANY KIND WHATSOEVER WHICH SELLER HAS OR MIGHT HAVE IN THE FUTURE, INCLUDING BUT NOT LIMITED TO BREACH OF CONTRACT, QUANTUM MERUIT, CLAIMS UNDER THE DUE PROCESS AND TAKINGS CLAUSES OF THE TEXAS AND UNITED STATES CONSTITUTIONS, TORT CLAIMS, OR BUYER'S NEGLIGENCE.

26. GOVERNING LAW AND VENUE - This agreement shall be governed by the laws of the State of Texas. All performance and payment made pursuant to this agreement shall be deemed to have occurred in Midland County, Texas. Exclusive venue for any claims, suits or any other action arising from or connected in any way to this agreement or the performance of this agreement shall be in Midland County, Texas. The obligations and undertakings of each of the parties to this agreement shall be deemed to have occurred in Midland County, Texas.

27. INDEPENDENT CONTRACTOR - It is expressly understood and agreed that Seller shall perform all work and services described herein as an independent contractor and not as an officer, agent, servant or employee of the Buyer; that Seller shall have exclusive control of and the exclusive right to control the details of the services and work performed hereunder, and all persons performing the same; and shall be solely responsible for the acts and omissions of its officers, agents, employees, contractors and subcontractors; that the doctrine of respondeat superior shall not apply as between Buyer and Seller, its officers, agents, employees, contractors and subcontractors; and that nothing herein shall be construed as creating a partnership or joint enterprise between Buyer and Seller. No person performing any of the work and services described hereunder by Seller shall be considered an officer, agent, servant or employee of the Buyer. Further, it is specifically understood and agreed that nothing in this agreement is intended or shall be construed as creating a "Community of Pecuniary Interest" or "An Equal Right of Control" which would give rise to vicarious liability. Seller shall be an independent contractor under this agreement and shall assume all of the rights, obligations and liabilities, applicable to it as such independent contractor hereunder. The Buyer does not have the power to direct the order in which the work is done. The Buyer shall not have the right to control the means, methods or details of the Seller's work. Seller shall assume exclusive responsibility for the work. Seller is entirely free to do the work in its own way.

28. NOTICE OF ALLEGED BREACH; STATUTORY PREREQUISITES - As a condition precedent to filing suit for alleged damages incurred by an alleged breach of an express or implied provision of this agreement, Seller or his legal representative, shall give the City Manager, or any other reasonable official of the Buyer, notice in writing (consisting of one original and seven copies of notice attached to a copy of this agreement) of such damages, duly verified, within one-hundred-twenty (120) days after the same has been sustained. The discovery rule does not apply to the giving of this notice. The notice shall include when, where and how the damages occurred, the apparent extent thereof, the amount of damages sustained, the amount for which the Seller will settle, the physical and mailing addresses of Seller at the time and date the claim was presented and the physical and mailing addresses of Seller for the six months immediately preceding the occurrence of such damages, and the names and addresses of the witnesses upon whom the Seller relies to establish its claim; and a failure to so notify the City Manager within the time and manner provided herein shall exonerate, excuse and except the Buyer from any liability whatsoever. The Buyer is under no obligation to provide notice to Seller that Seller's notice is insufficient. Buyer reserves the right to request reasonable additional information regarding the claim. Said additional information shall be supplied within thirty (30) days after receipt of notice.

The statutory prerequisites outlined herein constitute jurisdictional requirements pursuant to Section 271.154 of the Texas Local Government Code and Section 311.034 of the Texas Government Code. Notwithstanding any other provision, Seller's failure to comply with the requirements herein shall perpetually bar Seller's claim for damages under Chapter 271 of the Texas Local Government Code, and Section 311.034 of the Texas Government Code, regardless if Buyer has actual or constructive notice or knowledge of said claim or alleged damages. Seller agrees that the requirements of this entire agreement are reasonable.

29. INDEMNITY (NOT APPLICABLE TO PURCHASE AGREEMENTS) - SELLER WILL INDEMNIFY AND HOLD HARMLESS AND DEFEND BUYER AND ALL OF BUYER'S OFFICERS, AGENTS AND EMPLOYEES FROM ALL SUITS, ACTIONS, CLAIMS, DAMAGES, PERSONAL INJURIES, LOSSES, PROPERTY DAMAGE AND EXPENSES OF ANY CHARACTER WHATSOEVER, INCLUDING REASONABLE ATTORNEY'S FEES,

BROUGHT FOR OR ON ACCOUNT OF ANY INJURIES OR DAMAGES RECEIVED OR SUSTAINED BY ANY PERSON OR PERSONS OR PROPERTY, ON ACCOUNT OF ANY NEGLIGENT ACT OF SELLER, its agents or employees, or any subcontractor, arising out of, or resulting from, Seller's use of, or activities on, the agreement premises, and Seller will be required to pay any judgment with costs which may be obtained against Buyer or any of its officers, agents or employees, including reasonable attorney's fees.

SELLER SHALL INDEMNIFY AND HOLD HARMLESS AND DEFEND BUYER AND ALL OF BUYER'S OFFICERS, AGENTS AND EMPLOYEES FROM ALL SUITS, ACTIONS, CLAIMS, DAMAGES, ACCIDENTAL DEATH, PERSONAL INJURIES, PROPERTY DAMAGE, LOSSES, AND EXPENSE OF ANY CHARACTER WHATSOEVER INCLUDING REASONABLE ATTORNEY'S FEES, BROUGHT FOR OR ON ACCOUNT OF ANY INJURIES OR DAMAGES RECEIVED OR SUSTAINED BY ANY PERSON OR PERSONS OR PROPERTY, ON ACCOUNT OF ANY NEGLIGENT ACT OF BUYER, BUYER'S OFFICERS, AGENTS AND EMPLOYEES, WHETHER SUCH NEGLIGENT ACT WAS THE SOLE PROXIMATE CAUSE OF THE INJURY OR DAMAGE OR A PROXIMATE CAUSE JOINTLY AND CONCURRENTLY WITH SELLER OR SELLER'S EMPLOYEES, AGENTS OR SUBCONTRACTORS NEGLIGENCE, IN THE EXECUTION, SUPERVISION AND OPERATIONS GROWING OUT OF OR IN ANY WAY CONNECTED WITH THE PERFORMANCE OF THIS AGREEMENT AND SELLER WILL BE REQUIRED TO PAY ANY JUDGMENT WITH COSTS WHICH MAY BE OBTAINED AGAINST BUYER OR ANY OF BUYER'S OFFICERS, AGENTS OR EMPLOYEES, INCLUDING ATTORNEY'S FEES.

30. SOVEREIGN IMMUNITY - By executing this agreement the Buyer is not waiving its right of sovereign immunity. The Buyer is retaining its immunity from suit. The Buyer is not granting consent to be sued by legislative resolution or action. **THERE IS NO WAIVER OF SOVEREIGN IMMUNITY**.

31. THIRD PARTY BENEFICIARY - The Buyer's approval of this agreement does not create a third party beneficiary. There is no third party beneficiary to this agreement. No person or entity who is not a party to this agreement shall have any third party beneficiary or other rights hereunder.

32. ATTORNEY FEES - BY EXECUTING THIS AGREEMENT, SELLER AGREES TO WAIVE AND DOES HEREBY KNOWINGLY, CONCLUSIVELY, VOLUNTARILY AND INTENTIONALLY WAIVE ANY CLAIM IT HAS OR MAY HAVE IN THE FUTURE AGAINST THE BUYER, REGARDING THE AWARD OF ATTORNEY'S FEES, WHICH ARE IN ANY WAY RELATED TO THE AGREEMENT, OR THE CONSTRUCTION, INTERPRETATION OR BREACH OF THE AGREEMENT. THE SELLER SPECIFICALLY AGREES THAT IF THE SELLER BRINGS OR COMMENCES ANY LEGAL ACTION OR PROCEEDING RELATED TO THIS AGREEMENT, THE CONSTRUCTION, INTERPRETATION, VALIDITY OR BREACH OF THIS AGREEMENT, INCLUDING BUT NOT LIMITED TO ANY ACTION PURSUANT TO THE PROVISIONS OF THE TEXAS UNIFORM DECLARATORY JUDGMENTS ACT (TEXAS CIVIL PRACTICE AND REMEDIES CODE SECTION 37.001, ET. SEQ., AS AMENDED), OR CHAPTER 271 OF THE TEXAS LOCAL GOVERNMENT CODE, THE SELLER AGREES TO ABANDON, WAIVE AND RELINQUISH ANY AND ALL RIGHTS TO THE RECOVERY OF ATTORNEY'S FEES TO WHICH SELLER MIGHT OTHERWISE BE ENTITLED.

SELLER AGREES THAT THIS IS THE VOLUNTARY AND INTENTIONAL RELINQUISHMENT AND ABANDONMENT OF A PRESENTLY EXISTING KNOWN RIGHT. SELLER ACKNOWLEDGES THAT IT UNDERSTANDS ALL TERMS AND CONDITIONS OF THE AGREEMENT. THE SELLER FURTHER ACKNOWLEDGES AND AGREES THAT THERE WAS AND IS NO DISPARITY OF BARGAINING POWER BETWEEN THE BUYER AND THE SELLER. THIS SECTION SHALL NOT BE CONSTRUED OR INTERPRETED AS A WAIVER OF SOVEREIGN IMMUNITY.

THE SELLER AND BUYER ARE RELYING ON THEIR OWN JUDGMENT. EACH PARTY HAD THE OPPORTUNITY TO DISCUSS THIS AGREEMENT WITH LEGAL COUNSEL PRIOR TO ITS EXECUTION.

33. CONSIDERATION - The terms of this agreement are supported by good and valuable consideration, the receipt and sufficiency of which is hereby acknowledged by the parties named herein.

34. CERTIFICATION - In accordance with the Texas Local Government Code, the City of Midland Department of Facilities and Fleet Management does hereby certify that the City of Midland is in compliance with Sections 252, 271 and all applicable sections of the Texas Local Government Code and other state law as it applies to procurement and contracting issues.

35. FEDERAL WAGE REQUIREMENTS - If applicable, the Davis-Bacon Act, 29 CFR 5.5, and any related acts or regulations are hereby incorporated by reference and made a part of this agreement, and all terms and requirements under said laws, by such incorporation, are made terms and requirements of this agreement, to which the parties to this agreement have agreed to be bound.

36. COMPLIANCE WITH FEDERAL, STATE AND LOCAL LAWS - Seller shall at all times during the term of this agreement comply with applicable federal, state, and local laws regarding Seller's activities pursuant to this agreement, including but not limited to all applicable sections of the Municipal Code of Midland, Texas, as may be amended, said sections being hereby incorporated by reference and made a part of this agreement for all legal purposes. Failure to abide by any such law mentioned herein constitutes grounds for the immediate termination of this agreement.

CITY OF MIDLAND

ADDENDUM

RFQ # 23003406

T23-03 Traffic Signal Projects

TO ALL PROPOSERS ON THE SUBJECT RFQ:

ADDENDUM # 1

DATE: May 17, 2023

The following questions were raised by one or more of the proposers. The answers are provided as a matter of clarification for all proposers as follows:

Q1: On the proposal, sheets 3 and 11 have conflicting days. Sheet 3 has 365 calendar days and sheet 11 shows 150 working days.
A2: 150 days.

Q2: On the proposal under note 2 shows the city to provide signal poles for alternates 1 and 2, but general notes in plans make it seem like the contractor is to provide on them per item 680 note 2. But the Big Spring and Lonestar General notes has city to provide them. Please confirm that the city is or is not providing poles, as well as anchor bolts on each project.
A2: City will provide signal poles and anchor bolt for base bid and two alternatives. Regardless of what is shown on plans.

Q3: Both alternates have conflicting notes about signal heads in general notes under items 682 and 686. One states Poly and the other aluminum.
A3: Poly signal head for all three intersections.

Q4: Avalon prints have bid items for signal poles with ILSN signs, but prints appear not have ILSN signs, only regular signs. If they are to be ILSN, then the wiring for the intersection does not account for them. Also notes, that the city is supplying ILSN signs for contractor to install on all 3 locations.
A4: Yes. Avalon will have ILSN if this intersection will be funded by council, ILSN wiring can be charged towards owner allowance. City will provide ILSN for base bid and two alternatives. Regardless of what is shown on plans.

Q5: Is the city providing the luminaires that go on the signal poles, or contractor to provide them?
A5: City will provide luminaires. Regardless of what is shown on plans.

Q6: Big Spring plans, General notes, item 680 note 13 has city to provide radar detection but item 6052 has contractor to provide them.
A6: City will provide radar detection for base bid and two alternatives. Regardless of what is shown on plans.

Q7: If the city is providing signal poles and anchor bolts, what is the anticipated time of arrival of materials? Since notice to proceed is based on them being delivered.
A7: We ordered Big Spring and Lonestar signal poles and anchor bolts about 4 weeks ago at that time vendor gave us 8 to 16-week lead time. By the time we select contractor and go to the council we will have signal poles.

Q8: Plan sheet 7 show 4 each presence RVDS and 2 each advanced RVDS, but quantities on bid items BB68 and BB79 shows only 2 of each. Sheet 4 note 13 also shows city suppling 4.
A8: There will be 4 presence RVDS furnished by the City. I have removed the advanced detection (BB79) from bid item list. Attached is the updated pay item list.

Q9: Sheet 4 item 6025 notes a 4 channel backplate required for RPDD, is the city furnishing the entire Wavetronix system and all required materials? If not, please clarify what the contractor is to provide.
A9: City will furnish entire Wavetronix system

Q10: Plan sheet 7 note 9, is the city providing only signs #1, 2, 5, 8 and 9? Contractor supply the rest? Also, signs 15, 16 and 17 appear to be mislabeled as signs 20, 21 and 22. Please confirm.
A10: City will provide ILSN sign (2, 5, 9, 12) and FYA sign (1, 8). Yes, sign 15, 16 and 17 is mislabeled as signs 20, 21 and 22, there is no need for sign 16 and 17. Rest is furnishing and Install by the contractor.

Q11: There is no item for tray cable to be ran for either the ILSN's or the luminaires on the signal poles. The only power runs shown would be to the 2 poles on the East side of the intersection.
A11: ILSN and luminaires wiring can be charged towards owner allowance

Q12: Service Data on sheet 9 shows the ILSNs to be on a 1 pole breaker, but I believe they are powered on 120/240 which would require a 2-pole breaker... But the city may have different supplier for them and only need 120 volts.
A12: 1 pole breaker (120v).

PLEASE RETURN THIS ADDENDUM WITH YOUR PROPOSAL BY THE CLOSING DATE.

All other terms and conditions shall remain the same.

Willis Electric Co LP
Company Name

Tommy Willis
Authorized Signature

6-8-23
Date

Tommy Willis
Please Print Above Name

325-698-3444
Phone

CITY OF MIDLAND

ADDENDUM

RFQ # 23003406

T23-03 Traffic Signal Projects

TO ALL PROPOSERS ON THE SUBJECT RFQ:

ADDENDUM # 2 (revised)

DATE: May 24, 2023

The following questions were raised by one or more of the proposers. The answers are provided as a matter of clarification for all proposers as follows:

Notice to all bidders: Any minor discrepancies in pay item quantities will be addressed using Owner's Allowance.

Lonestar:

Q1: Is the patching at the edge of the concrete work subsidiary?
A2: All patching at the edge of concrete is subsidiary.

Q2: On the SE corner, there is a void going East. It is close to the sidewalk. What is required?
A2: City staff inspected the project site and confirmed the presence of a small void that has developed behind the curb and gutter at the southeast corner of the intersection. The void appears to be aligned with an underground pipeline owned by Enterprise Operating, LLC. City staff has contacted Enterprise Operating, and coordination to address the void is ongoing. Despite the presence of the small void, City staff believes there is no conflict with the installation of signal pole foundations, conduit, and other key infrastructure required for a fully functional signalized intersection.

Woodcrest:
Q1: Can they add a Mobilization item to alternate 1?
A1: Mobilization has been added to Additive Alternate 1. Please see the revised Pay Items attached.

Q2: When will the utility removal by others be completed?
A2: City staff anticipates utility relocation to occur no later than end of July 2023.

PLEASE RETURN THIS ADDENDUM WITH YOUR PROPOSAL BY THE CLOSING DATE.

All other terms and conditions shall remain the same.

Willis Electric Co LP
Company Name

Authorized Signature

6-8-23
Date

Tommy Willis
Please Print Above Name

325-698-3444
Phone

This form is available in a Word Form fill in document. If desired please contact the Purchasing office for a copy by e-mail

No-Bid
Response
For
Request #: 23003406

If your firm has made a decision not to bid on this request, please complete this form and return to:

Office of the Purchasing Agent
City of Midland
P.O. BOX 1152
Midland, TX 79702-1152

or

Fax to: (432) 685-0523

Email: purchasing@midlandtexas.gov

Please Check all reasons below that apply:

- ☐ Cannot provide items requested.
- ☐ Cannot be competitive.
- ☐ Cannot meet the specifications in the request.
- ☐ Cannot provide the liability insurance required by the City of Midland.
- ☐ Cannot provide the Worker's Compensation Insurance required by the City of Midland.
- ☐ Cannot provide the required bonding.
- ☐ Cannot comply with the indemnification requirements.
- ☐ Job too large.
- ☐ Job too small.
- ☐ Do not wish to do business with the City of Midland.
- ☐ Other. Please explain below:

_____

_____

Company Name: _____

Authorized Officer or Agent Signature: _____

Telephone Number: _____ Fax: _____

Email Address: _____

PLEASE NOTE: THIS COMPLETED FORM MAY BE FAXED TO 432-685-0523. IT IS NOT NECESSARY TO RETURN ANY OTHER DOCUMENTS.

EXHIBIT C

Bonding Requirements

The successful bidder shall be required to furnish a Performance & Payment Bond* for bids in excess of $50,000.00, in an amount equal to one hundred percent (100%) of the total contract price, such bond to be executed in five (5) original counterparts by a Corporate Surety authorized to do business in the State of Texas and acceptable to the City of Midland. All bonds must be executed on forms contained in these contract documents. The form of agreement which the successful bidder, as contractor, will be required to execute is also included herewith. The form of agreement and the form of the bonds should be carefully examined by the bidder.

A certified check, cashier's check, bank money order, or irrevocable letter of credit issued by a bank satisfactory to the City, or a bidder's bond on the form provided, in the amount of five percent (5%) of the largest possible lump sum bid submitted, payable without recourse to the City, must accompany the bidder's proposal, as a guaranty that the bidder will enter a contract and execute the required payment bond and guaranty in the forms provided within fifteen (15) days after notice of award of contract to him. Bids or proposals without the required bid guaranty will not be considered. All bid sureties and payment bonds shall name the City of Midland as Obligee.

*A cash security such as a cashier's check or irrevocable letter of credit issued by a bank satisfactory to the City for 100 % of the contract amount may be supplied in lieu of the Performance and Payment Bonds. The check will be returned un-cashed upon satisfactory completion of the work and evidence of payment of all obligations due for the contract.

BID BOND

THE STATE OF TEXAS §

SURETY NO. _____

COUNTY OF MIDLAND §

KNOW ALL MEN BY THESE PRESENTS, THAT _____

_____

_____

(hereinafter called the Principal), as Principal, and _____

_____

_____

(hereinafter called the Surety), as Surety, are held and firmly bound unto the City of Midland, Texas a home rule municipal corporation of Midland County, Texas, (hereinafter called the Obligee), in the amount of _____

_____ DOLLARS

($_____), for the payment whereof the said Principal and Surety bind themselves, and their heirs, administrators, executors, successors and assigns, jointly and severally, firmly by these presents.

WHEREAS, the Principal has submitted a Bid or Proposal to enter into a certain written Contract with the obligee to _____

_____.

NOW, THEREFORE, THE CONDITION OF THIS OBLIGATION IS SUCH, that if the said Principal shall faithfully enter into such written Contract, then this obligation shall be void; otherwise to remain in full force and effect.

IT IS EXPRESSLY UNDERSTOOD AND AGREED that if said Principal should withdraw its Bid anytime after such Bid is opened and before official rejection to such Bid or, if successful in securing the award thereof, said Principal should fail to enter into the Contract and furnish satisfactory Performance Bond and Payment Bond, the Obligee, in either such events, shall be entitled and is hereby given the right to collect the full amount of this Bid Bond as liquidated damages.

PROVIDED, further that if any legal action be filed upon this Bond venue shall lie in Midland County, Texas

IN WITNESS THEREOF, THE SAID PRINCIPAL AND SURETY do sign and seal this instrument, this _____ day of _____, 20____.

_____	_____
Principal	Surety
By _____	By _____
Address _____	Address _____
_____	_____

APPROVED AS TO FORM:

_____

City Attorney

NOTE: ATTACH POWER OF ATTORNEY

BID BOND

Travelers Casualty and Surety Company of America
Hartford, CT 06183

KNOWN ALL BY THESE PRESENTS, That we, Willis Electric Co., LP, as Principal, and Travelers Casualty and Surety Company of America, as Surety, are held and firmly bound unto City of Midland, as Obligee, in the sum of Five (5%) Percent of the Greatest Amount Bid Dollars (5%) for the payment of which we bind ourselves, and our successors and assigns, jointly and severally, as provided herein.

WHEREAS, Principal has submitted or is about to submit a bid to the Obligee on a contract for T23-03 Traffic Signal Project ("Project").

NOW, THEREFORE, the condition of this bond is that if Obligee accepts Principal's bid, and Principal enters into a contract with Obligee in conformance with the terms of the bid and provides such bond or bonds as may be specified in the bidding or contract documents, then this obligation shall be void; otherwise Principal and Surety will pay to Obligee the difference between the amount of Principal's bid and the amount for which Obligee shall in good faith contract with another person or entity to perform the work covered by Principal's bid, but in no event shall Surety's and Principal's liability exceed the penal sum of this bond.

Signed this 8th day of June, 2023.

Willis Electric Co., LP.
(Principal)

By: T Gary Miller George Barthen

Travelers Casualty and Surety Company of America

By: Teresa Ayala
Teresa Ayala, Attorney-in-Fact

TRAVELERS

Travelers Casualty and Surety Company of America
Travelers Casualty and Surety Company
St. Paul Fire and Marine Insurance Company

POWER OF ATTORNEY

KNOW ALL MEN BY THESE PRESENTS: That Travelers Casualty and Surety Company of America, Travelers Casualty and Surety Company, and St. Paul Fire and Marine Insurance Company are corporations duly organized under the laws of the State of Connecticut (herein collectively called the "Companies"), and that the Companies do hereby make, constitute and appoint **Teresa Ayala** of **FT WORTH**, **Texas**, their true and lawful Attorney(s)-in-Fact to sign, execute, seal and acknowledge any and all bonds, recognizances, conditional undertakings and other writings obligatory in the nature thereof on behalf of the Companies in their business of guaranteeing the fidelity of persons, guaranteeing the performance of contracts and executing or guaranteeing bonds and undertakings required or permitted in any actions or proceedings allowed by law.

IN WITNESS WHEREOF, the Companies have caused this instrument to be signed, and their corporate seals to be hereto affixed, this **21st** day of **April, 2021**.

State of Connecticut

City of Hartford ss.

By: _____
Robert L. Raney, Senior Vice President

On this the **21st** day of **April, 2021**, before me personally appeared **Robert L. Raney**, who acknowledged himself to be the Senior Vice President of each of the Companies, and that he, as such, being authorized so to do, executed the foregoing instrument for the purposes therein contained by signing on behalf of said Companies by himself as a duly authorized officer.

IN WITNESS WHEREOF, I hereunto set my hand and official seal.

My Commission expires the **30th** day of **June, 2026**

_____
Anna P. Nowik, Notary Public

This Power of Attorney is granted under and by the authority of the following resolutions adopted by the Boards of Directors of each of the Companies, which resolutions are now in full force and effect, reading as follows:

RESOLVED, that the Chairman, the President, any Vice Chairman, any Executive Vice President, any Senior Vice President, any Vice President, any Second Vice President, the Treasurer, any Assistant Treasurer, the Corporate Secretary or any Assistant Secretary may appoint Attorneys-in-Fact and Agents to act for and on behalf of the Company and may give such appointee such authority as his or her certificate of authority may prescribe to sign with the Company's name and seal with the Company's seal bonds, recognizances, contracts of indemnity, and other writings obligatory in the nature of a bond, recognizance, or conditional undertaking, and any of said officers or the Board of Directors at any time may remove any such appointee and revoke the power given him or her; and it is

FURTHER RESOLVED, that the Chairman, the President, any Vice Chairman, any Executive Vice President, any Senior Vice President or any Vice President may delegate all or any part of the foregoing authority to one or more officers or employees of this Company, provided that each such delegation is in writing and a copy thereof is filed in the office of the Secretary; and it is

FURTHER RESOLVED, that any bond, recognizance, contract of indemnity, or writing obligatory in the nature of a bond, recognizance, or conditional undertaking shall be valid and binding upon the Company when (a) signed by the President, any Vice Chairman, any Executive Vice President, any Senior Vice President or any Vice President, any Second Vice President, the Treasurer, any Assistant Treasurer, the Corporate Secretary or any Assistant Secretary and duly attested and sealed with the Company's seal by a Secretary or Assistant Secretary; or (b) duly executed (under seal, if required) by one or more Attorneys-in-Fact and Agents pursuant to the power prescribed in his or her certificate or their certificates of authority or by one or more Company officers pursuant to a written delegation of authority, and it is

FURTHER RESOLVED, that the signature of each of the following officers: President, any Executive Vice President, any Senior Vice President, any Vice President, any Assistant Vice President, any Secretary, any Assistant Secretary, and the seal of the Company may be affixed by facsimile to any Power of Attorney or to any certificate relating thereto appointing Resident Vice Presidents, Resident Assistant Secretaries or Attorneys-in-Fact for purposes only of executing and attesting bonds and undertakings and other writings obligatory in the nature thereof, and any such Power of Attorney or certificate bearing such facsimile signature or facsimile seal shall be valid and binding upon the Company and any such power so executed and certified by such facsimile signature and facsimile seal shall be valid and binding on the Company in the future with respect to any bond or understanding to which it is attached.

I, **Kevin E. Hughes**, the undersigned, Assistant Secretary of each of the Companies, do hereby certify that the above and foregoing is a true and correct copy of the Power of Attorney executed by said Companies, which remains in full force and effect.

Dated this **8th** day of **June**, **2023**.

_____
Kevin E. Hughes, Assistant Secretary

To verify the authenticity of this Power of Attorney, please call us at 1-800-421-3880.
Please refer to the above-named Attorney(s)-in-Fact and the details of the bond to which this Power of Attorney is attached.

PAYMENT BOND

THE STATE OF TEXAS §

COUNTY OF MIDLAND §

SURETY NO _____

KNOW ALL MEN BY THESE PRESENTS, THAT _____ of the City of _____ of the County of _____ and State of Texas as Principal, and _____, as Surety, are held and firmly bound unto the City of Midland, Texas, as Obligee, in the amount of _____ DOLLARS ($ _____) for the payment whereof the said Principal and Surety bind themselves, their heirs, administrators, executors, successors and assigns, jointly and severally, firmly by these presents.

WHEREAS, the Principal has entered into a certain written contract with the Obligee, dated the _____ day of _____, 20__, for the furnishing of materials, equipment to perform all labor and work necessary for _____, hereof as fully and to the same extent as if copied at length herein.

NOW, THEREFORE, the condition of the obligation is that if the said Principal shall pay all claimants supplying labor and material to him or a subcontractor in the prosecution of the work provided for in said contract, then this obligation shall be null and void; otherwise, it is to remain in full force and effect.

Surety, for value received, stipulates and agrees that no change, extension of time alteration or addition to the terms of the contract, or to the work performed there under, or the plans, specifications of drawings accompanying the same, or any assignment of the contract as may be provided for in the instructions to bidders, shall in anywise affect its obligation on this Bond, and it does waive notice of any such change, extension of

time, alteration or addition to the terms of the contract, assignment thereof, or to the work to be performed there under.

IN WITNESS WHEREOF the said Principal and Surety have signed and sealed this instrument, this _____ day of _____ , 20__ .

_____	_____
Principal	Surety
By _____	By _____
Address _____	Address _____
_____	_____
_____	_____

APPROVED AS TO FORM:

_____

City Attorney

NOTE: Attach Power of Attorney

Form Revised August 2012

PERFORMANCE BOND

THE STATE OF TEXAS §

COUNTY OF MIDLAND §

SURETY NO _____

KNOW ALL MEN BY THESE PRESENTS, THAT _____ (Hereinafter called the Principal[s]), as Principal(s), and _____ (Hereinafter called the Surety), as Surety, are held and firmly bound unto the City of Midland, Texas a home rule municipal corporation of Midland County, Texas, (hereinafter called the Obligee), in the amount of _____ DOLLARS ($ _____) for the payment whereof the said Principal and surety bind themselves, and their heirs, administrators, executors, successors and assigns, jointly and severally, firmly by these presents.

WHEREAS, the Principal has entered into a certain written contract with the Obligee, dated the _____day of _____, 20___ , for the furnishing of materials and equipment to perform all labor and work necessary for the construction of _____ , specifically including in the scope of this work and bond, the additional maintenance guaranty provisions set forth in the contract conditions, which contract is hereby referred to and made a part hereof as fully and to the same extent as if copies at length herein, as well as the Principal's primary obligation to perform according to plans and specifications.

NOW, THEREFORE, THE CONDITION OF THIS OBLIGATION IS SUCH, that if the said Principal shall faithfully perform the work in accordance with the plans, specifications, instructions to bidder, general and special conditions and other contract documents, including any addendum thereto, then this obligation shall be void; otherwise to remain in full force and effect.

PROVIDED further that if any legal action be filed upon this Bond venue shall lie in Midland County, State of Texas.

Surety, for value received, stipulates and agrees that no change, extension of time, alteration or addition to the terms of the contract, or to the work performed thereunder, or the plans, specifications or drawings accompanying the same, or any assignment of the contract as may be provided for in the instructions to bidders, shall in anywise affect its obligation on this Bond, and it does waive notice of any such change, extension of time, alteration or addition to the terms of the contract, assignment thereof, or the work to be performed thereunder.

IN WITNESS WHEREOF, the said Principal and surety do sign and seal this instrument, this _____ day of _____, 20___.

_____	_____
Principal	Surety
By _____	By _____
Address _____	Address _____
_____	_____
_____	_____

APPROVED AS TO FORM:

_____
City Attorney

NOTE: Attach Power of Attorney

Form Revised August 2012

PerfB 2

"General Decision Number: TX20220261 08/05/2022

Superseded General Decision Number: TX20210261

State: Texas

Construction Type: Building

County: Midland County in Texas.

BUILDING CONSTRUCTION PROJECTS (does not include single family homes or apartments up to and including 4 stories).

Note: Contracts subject to the Davis-Bacon Act are generally required to pay at least the applicable minimum wage rate required under Executive Order 14026 or Executive Order 13658. Please note that these Executive Orders apply to covered contracts entered into by the federal government that are subject to the Davis-Bacon Act itself, but do not apply to contracts subject only to the Davis-Bacon Related Acts, including those set forth at 29 CFR 5.1(a)(2)-(60).

If the contract is entered into on or after January 30, 2022, or the contract is renewed or extended (e.g., an option is exercised) on or after January 30, 2022:	. Executive Order 14026 generally applies to the contract. . The contractor must pay all covered workers at least $15.00 per hour (or the applicable wage rate listed on this wage determination, if it is higher) for all hours spent performing on the contract in 2022.
If the contract was awarded on or between January 1, 2015 and January 29, 2022, and the contract is not renewed or extended on or after January 30, 2022:	. Executive Order 13658 generally applies to the contract. . The contractor must pay all covered workers at least $11.25 per hour (or the applicable wage rate listed on this wage determination, if it is higher) for all hours spent performing on that contract in 2022.

The applicable Executive Order minimum wage rate will be adjusted annually. If this contract is covered by one of the Executive Orders and a classification considered necessary for performance of work on the contract does not appear on this wage determination, the contractor must still submit a conformance request.

Additional information on contractor requirements and worker protections under the Executive Orders is available at https://www.dol.gov/agencies/whd/government-contracts.

Modification Number	Publication Date
0	01/07/2022
1	02/25/2022

2 08/05/2022

BOIL0074-003 01/01/2021

	Rates	Fringes
BOILERMAKER	$ 29.47	24.10

ENGI0178-005 06/01/2020

	Rates	Fringes
POWER EQUIPMENT OPERATOR		
(1) Tower Crane	$ 32.85	13.10
(2) Cranes with Pile Driving or Caisson Attachment and Hydraulic Crane 60 tons and above	$ 28.75	10.60
(3) Hydraulic cranes 59 Tons and under	$ 32.35	13.10

* IRON0084-011 06/01/2022

	Rates	Fringes
IRONWORKER, ORNAMENTAL	$ 26.76	7.88

PLUM0404-001 09/01/2020

	Rates	Fringes
PLUMBER	$ 26.05	8.81

* SUTX2014-037 07/21/2014

	Rates	Fringes
BRICKLAYER	$ 20.00	0.00
CARPENTER	$ 13.82 **	0.00
CEMENT MASON/CONCRETE FINISHER	$ 13.76 **	0.00
ELECTRICIAN	$ 23.18	6.31
INSULATOR - MECHANICAL (Duct, Pipe & Mechanical System Insulation)	$ 19.77	7.13
IRONWORKER, REINFORCING	$ 12.27 **	0.00
IRONWORKER, STRUCTURAL	$ 22.16	5.26
LABORER: Common or General	$ 11.80 **	0.00
LABORER: Mason Tender - Brick	$ 11.38 **	0.00
LABORER: Mason Tender - Cement/Concrete	$ 10.58 **	0.00
LABORER: Pipelayer	$ 12.49 **	2.13
LABORER: Roof Tearoff	$ 11.28 **	0.00
OPERATOR:		

Backhoe/Excavator/Trackhoe.....$ 14.25 ** 0.00

OPERATOR: Bobcat/Skid Steer/Skid Loader.....$ 13.93 ** 0.00

OPERATOR: Bulldozer.....$ 18.29 1.31

OPERATOR: Drill.....$ 16.22 0.34

OPERATOR: Forklift.....$ 14.83 ** 0.00

OPERATOR: Grader/Blade.....$ 13.37 ** 0.00

OPERATOR: Loader.....$ 13.55 ** 0.94

OPERATOR: Mechanic.....$ 17.52 3.33

OPERATOR: Paver (Asphalt, Aggregate, and Concrete).....$ 16.03 0.00

OPERATOR: Roller.....$ 12.70 ** 0.00

PAINTER (Brush, Roller, and Spray).....$ 15.00 0.73

PIPEFITTER.....$ 25.80 8.55

ROOFER.....$ 14.75 ** 0.00

SHEET METAL WORKER (HVAC Duct Installation Only).....$ 22.73 7.52

SHEET METAL WORKER, Excludes HVAC Duct Installation.....$ 19.50 0.00

TILE FINISHER.....$ 11.22 ** 0.00

TILE SETTER.....$ 14.74 ** 0.00

TRUCK DRIVER: Dump Truck.....$ 12.39 ** 1.18

TRUCK DRIVER: Flatbed Truck.....$ 19.65 8.57

TRUCK DRIVER: Semi-Trailer Truck.....$ 12.50 ** 0.00

TRUCK DRIVER: Water Truck.....$ 12.00 ** 4.11

WELDERS - Receive rate prescribed for craft performing operation to which welding is incidental.

==========

** Workers in this classification may be entitled to a higher minimum wage under Executive Order 14026 ($15.00) or 13658 ($11.25). Please see the Note at the top of the wage determination for more information.

Note: Executive Order (EO) 13706, Establishing Paid Sick Leave for Federal Contractors applies to all contracts subject to the Davis-Bacon Act for which the contract is awarded (and any solicitation was issued) on or after January 1, 2017. If this contract is covered by the EO, the contractor must provide employees with 1 hour of paid sick leave for every 30 hours

they work, up to 56 hours of paid sick leave each year. Employees must be permitted to use paid sick leave for their own illness, injury or other health-related needs, including preventive care; to assist a family member (or person who is like family to the employee) who is ill, injured, or has other health-related needs, including preventive care; or for reasons resulting from, or to assist a family member (or person who is like family to the employee) who is a victim of, domestic violence, sexual assault, or stalking. Additional information on contractor requirements and worker protections under the EO is available at https://www.dol.gov/agencies/whd/government-contracts.

Unlisted classifications needed for work not included within the scope of the classifications listed may be added after award only as provided in the labor standards contract clauses (29CFR 5.5 (a) (1) (ii)).

The body of each wage determination lists the classification and wage rates that have been found to be prevailing for the cited type(s) of construction in the area covered by the wage determination. The classifications are listed in alphabetical order of ""identifiers"" that indicate whether the particular rate is a union rate (current union negotiated rate for local), a survey rate (weighted average rate) or a union average rate (weighted union average rate).

Union Rate Identifiers

A four letter classification abbreviation identifier enclosed in dotted lines beginning with characters other than ""SU"" or ""UAVG"" denotes that the union classification and rate were prevailing for that classification in the survey. Example: PLUM0198-005 07/01/2014. PLUM is an abbreviation identifier of the union which prevailed in the survey for this classification, which in this example would be Plumbers. 0198 indicates the local union number or district council number where applicable, i.e., Plumbers Local 0198. The next number, 005 in the example, is an internal number used in processing the wage determination. 07/01/2014 is the effective date of the most current negotiated rate, which in this example is July 1, 2014.

Union prevailing wage rates are updated to reflect all rate changes in the collective bargaining agreement (CBA) governing this classification and rate.

Survey Rate Identifiers

Classifications listed under the ""SU"" identifier indicate that no one rate prevailed for this classification in the survey and the published rate is derived by computing a weighted average rate based on all the rates reported in the survey for that classification. As this weighted average rate includes all rates reported in the survey, it may include both union and non-union rates. Example: SULA2012-007 5/13/2014. SU indicates the rates are survey rates based on a weighted average calculation of rates and are not majority rates. LA indicates the State of Louisiana. 2012 is the year of survey on which these classifications and rates are based. The next number, 007 in the example, is an internal number used in producing the

wage determination. 5/13/2014 indicates the survey completion date for the classifications and rates under that identifier.

Survey wage rates are not updated and remain in effect until a new survey is conducted.

Union Average Rate Identifiers

Classification(s) listed under the UAVG identifier indicate that no single majority rate prevailed for those classifications; however, 100% of the data reported for the classifications was union data. EXAMPLE: UAVG-OH-0010 08/29/2014. UAVG indicates that the rate is a weighted union average rate. OH indicates the state. The next number, 0010 in the example, is an internal number used in producing the wage determination. 08/29/2014 indicates the survey completion date for the classifications and rates under that identifier.

A UAVG rate will be updated once a year, usually in January of each year, to reflect a weighted average of the current negotiated/CBA rate of the union locals from which the rate is based.

WAGE DETERMINATION APPEALS PROCESS

1.) Has there been an initial decision in the matter? This can be:

* an existing published wage determination
* a survey underlying a wage determination
* a Wage and Hour Division letter setting forth a position on a wage determination matter
* a conformance (additional classification and rate) ruling

On survey related matters, initial contact, including requests for summaries of surveys, should be with the Wage and Hour National Office because National Office has responsibility for the Davis-Bacon survey program. If the response from this initial contact is not satisfactory, then the process described in 2.) and 3.) should be followed.

With regard to any other matter not yet ripe for the formal process described here, initial contact should be with the Branch of Construction Wage Determinations. Write to:

Branch of Construction Wage Determinations
Wage and Hour Division
U.S. Department of Labor
200 Constitution Avenue, N.W.
Washington, DC 20210

2.) If the answer to the question in 1.) is yes, then an interested party (those affected by the action) can request review and reconsideration from the Wage and Hour Administrator (See 29 CFR Part 1.8 and 29 CFR Part 7). Write to:

Wage and Hour Administrator
U.S. Department of Labor
200 Constitution Avenue, N.W.
Washington, DC 20210

The request should be accompanied by a full statement of the interested party's position and by any information (wage payment data, project description, area practice material, etc.) that the requestor considers relevant to the issue.

3.) If the decision of the Administrator is not favorable, an interested party may appeal directly to the Administrative Review Board (formerly the Wage Appeals Board). Write to:

Administrative Review Board
U.S. Department of Labor
200 Constitution Avenue, N.W.
Washington, DC 20210

4.) All decisions by the Administrative Review Board are final.

==========

END OF GENERAL DECISIO"

City Council Meeting

Item Number: 6

Meeting Date: July 11, 2023

To: City Council / City Manager

From: Erika Martinez, Manager, Purchasing

Subject: **Motion approving plans and specifications for the North Citizen Collection Station Project and the West Citizen Collection Station Project, said plans and specifications being on file in the City Secretary's office referenced by the number and date of this motion, and authorizing the Interim City Manager or the Interim City Manager's designee to advertise a request for competitive sealed proposals for said projects pursuant to the statutes of the State of Texas for accomplishing the work set forth in said plans and specifications and to negotiate an agreement for said work; provided, however, that said agreement shall not become effective until approved by the City Council (DISTRICT: ALL) (GENERAL SERVICES)**

Purpose:

Motion approving plans and specifications for the North Citizen Collection Station Project and the West Citizen Collection Station Project, said plans and specifications being on file in the City Secretary's office referenced by the number and date of this motion, and authorizing the Interim City Manager or the Interim City Manager's designee to advertise a request for competitive sealed proposals for said projects pursuant to the statutes of the State of Texas for accomplishing the work set forth in said plans and specifications and to negotiate an agreement for said work; provided, however, that said agreement shall not become effective until approved by the City Council.

Recommended City Council Action:

Approve

Fiscal Impact:

Funding is not required at this time.

Discussion:

Please consider approving a motion plans and specifications for the North Citizen Collection Station Project and the West Citizen Collection Station Project, said plans and specifications being on file in the City Secretary's office referenced by the number and date of this motion, and authorizing the Interim City Manager or the Interim City Manager's designee to advertise a request for competitive sealed proposals. Please see the attached memo from Jeffery Ahrlett, Director of Solid Waste for more information.

Tina Gaug

City Manager's Office

INTEROFFICE MEMORANDUM

TO: **Erika Munoz, Purchasing Manager**

FROM: **Jeffery Ahrlett, Director of Solid Waste**

SUBJECT: **Request to go out for bids for the Citizen Collection Station North and Citizen Collection Station West Construction.**

DATE: **June 29, 2023**

I am requesting the approval to go out for the request for bids for the construction of the Citizen Collection Station North and Citizen Collection Station West projects. Plans and specifications are provided from the professional services agreement with Parkhill for the design and construction documents for the Citizen Collection Stations construction.

Due to the continued growth throughout the City of Midland, Solid Waste believes it is necessary to construct two Citizen Collection Stations to better serve our residents. The North Citizen Collection Station will be located on North 349 near the new water tower. The West Citizen Collection Station will be located on business 20 near Big Sky Drive in.

This project has two phases:

- Design and Bid Phase - $613,800
- Construction Phase – Estimated cost - $6,000,000

Solid Waste is seeking council approval to go out for bids for the continuation of the Citizen Collection Station North and Citizen Collection Station West construction project.

Parkhill

PROJECT MANUAL

CITY OF MIDLAND

West and North Citizens' Collection Stations

Midland, Texas

June | 2023

Parkhill Project # 01611921

Parkhill

PROJECT MANUAL

CITY OF MIDLAND

West and North Citizens' Collection Stations

Midland, Texas

THIS DOCUMENT IS RELEASED FOR THE PURPOSE OF INTERIM REVIEW UNDER THE AUTHORITY OF SPENSER J. HARVEY, P.E., LICENSE #138737. IT IS NOT TO BE USED FOR REGULATORY APPROVAL, CONSTRUCTION, BIDDING OR PERMIT PURPOSES.

PARKHILL F-560

06/29/2023

June | 2023

Parkhill Project # 01611921

TABLE OF CONTENTS

DIVISION 00 – PROCUREMENT AND CONTRACTING REQUIREMENTS

Not Used

DIVISION 01 – GENERAL REQUIREMENTS

01 10 00	Summary
01 20 00	Price and Payment Procedures
01 22 00	Measurement and Payment
01 25 00	Substitution Procedures
01 30 00	Administrative Requirements
01 30 01	Digital Data Licensing Agreement
01 32 16	Construction Progress Schedule
01 33 00	Submittal Procedures
01 40 00	Quality Requirements
01 43 26	Testing Laboratory Services
01 50 00	Temporary Facilities and Controls
01 57 23	Temporary Stormwater Pollution Control
01 60 00	Product Requirements
01 70 00	Execution and Closeout Requirements

DIVISION 02 – EXISTING CONDITIONS

Not Used

DIVISION 03 – CONCRETE

03 10 00	Concrete Forming and Accessories
03 20 00	Concrete Reinforcing
03 30 00	Cast-In-Place Concrete

DIVISION 04 – MASONRY

Not Used

DIVISION 05 – METAL

05 40 00	Cold-Formed Metal Framing

DIVISION 22 – PLUMBING

22 05 29	Hangers and Supports
22 11 00	Facility Water Distribution
22 13 16	Sanitary Waste and Vent Piping
22 33 00	Electric Domestic Water Heaters
22 40 00	Plumbing Fixtures

THIS DOCUMENT IS RELEASED FOR THE PURPOSE OF INTERIM REVIEW UNDER THE AUTHORITY OF SPENSER J. HARVEY, P.E., LICENSE #138737. IT IS NOT TO BE USED FOR REGULATORY APPROVAL, CONSTRUCTION, BIDDING OR PERMIT PURPOSES.

PARKHILL F-560

06/29/2023

DIVISION 23 – HEATING, VENTILATING, AND AIR-CONDITIONING (HVAC)

23 05 00	General Mechanical Requirements
23 05 00.20	Basic Mechanical Materials and Methods
23 05 53	Identification for HVAC and Plumbing Piping and Equipment
23 07 05	HVAC and Plumbing Insulation
23 23 00	Refrigerant Piping
23 31 00	HVAC Ducts and Casings
23 33 00	Air Duct Accessories
23 34 00	HVAC Fans
23 37 00	Air Inlet and Outlets
23 81 26.20	Split System Heat Pumps
28 32 39	Unit Heaters

DIVISION 31 – EARTHWORK

31 10 00	Site Clearing
31 20 00	Earth Moving
31 22 13	Rough Grade
31 23 23	Fill

DIVISION 32 – EXTERIOR IMPROVEMENTS

32 11 23	Aggregate Base Courses
32 12 16	Asphalt Paving
32 13 13	Concrete Paving

THIS DOCUMENT IS RELEASED FOR THE PURPOSE OF INTERIM REVIEW UNDER THE AUTHORITY OF SPENSER J. HARVEY, P.E., LICENSE #138737. IT IS NOT TO BE USED FOR REGULATORY APPROVAL, CONSTRUCTION, BIDDING OR PERMIT PURPOSES.

PARKHILL F-560

06/29/2023

DESIGN PROFESSIONAL RESPONSIBILITY

The Specification Sections authenticated by my seal and signature are limited to the following:

DIVISION 03 - CONCRETE

03 10 00	Concrete Forming and Accessories	5
03 20 00	Concrete Reinforcing	3
03 30 00	Cast-In-Place Concrete	16

DIVISION 03 – METAL

05 40 00	Cold-Formed Meal Framing	11

THIS DOCUMENT IS RELEASED FOR THE PURPOSE OF INTERIM REVIEW UNDER THE AUTHORITY OF J.M. WESTBROOK, P.E., LICENSE #51601. IT IS NOT TO BE USED FOR REGULATORY APPROVAL, CONSTRUCTION, BIDDING OR PERMIT PURPOSES.

PARKHILL F-560

06/20/2023

DESIGN PROFESSIONAL RESPONSIBILITY

The Specification Sections authenticated by my seal and signature are limited to the following:

DIVISION 26 – ELECTRICAL

26 05 00	Basic Electrical Methods
26 05 13	Building Wire and Cable
26 05 19	Equipment Wiring Systems
26 05 26	Grounding and Bonding
26 05 29	Supporting Devices
26 05 33	Conduit
26 05 33.16	Boxes
26 05 53	Electrical Identification
26 18 39	Enclosed Motor Controllers
26 24 16	Switchboards and Panelboards
26 27 26	Wiring Devices
26 28 16.16	Enclosed Switches
26 51 00	Interior Lighting

THIS DOCUMENT IS RELEASED FOR THE PURPOSE OF INTERIM REVIEW UNDER THE AUTHORITY OF ISAAC N. AGUILAR, P.E., LICENSE #117619. IT IS NOT TO BE USED FOR REGULATORY APPROVAL, CONSTRUCTION, BIDDING OR PERMIT PURPOSES.

PARKHILL F-560

06/20/2023

DESIGN PROFESSIONAL RESPONSIBILITY

The Specification Sections authenticated by my seal and signature are limited to the following:

DIVISION 22 – PLUMBING

22 05 29	Hangers and Supports
22 11 00	Facility Water Distribution
22 13 00	Facility Sanitary Sewerage
22 33 00	Electric Domestic Water Heaters
22 40 00	Plumbing Fixtures

DIVISION 23 – HEATING, VENTILATING, AND AIR-CONDITIONING (HVAC)

23 05 00	General Mechanical Requirements
23 05 00.20	Basic Mechanical Materials and Methods
23 05 53	Identification for HVAC and Plumbing Piping and Equipment
23 07 05	HVAC and Plumbing Insulation
23 23 00	Refrigerant Piping
23 31 00	HVAC Ducts and Casings
23 33 00	Air Duct Accessories
23 34 00	HVAC Fans
23 37 00	Air Inlet and Outlets
23 81 26.20	Split System Heat Pumps
28 32 39	Unit Heaters

THIS DOCUMENT IS RELEASED FOR THE PURPOSE OF INTERIM REVIEW UNDER THE AUTHORITY OF BRADLEY BLOUNT, P.E., LICENSE #115111. IT IS NOT TO BE USED FOR REGULATORY APPROVAL, CONSTRUCTION, BIDDING OR PERMIT PURPOSES.

PARKHILL F-560

06/20/2023

DOCUMENT 00 11 20 - REQUEST FOR PROPOSALS

1.1 OWNER

City of Midland
300 North Loraine Street
Midland, Texas 79701

1.2 PROJECT

West and North Citizens' Collection Stations

1.3 ARCHITECT

Parkhill
1700 W. Wall, Suite 100
Midland, Texas 79701
432.697.1447
Attn: R. Ashley Coco, AIA

1.4 DESCRIPTION

A. You are invited to submit a stipulated sum proposal on the attached forms for General Construction Work including mechanical, plumbing, electrical, Work and for furnishing of all labor, materials, services and equipment necessary for and incidental to the Work as called for on the Drawings and in the Project Manual. The construction is expected to commence by October 02, 2023.
B. Proposers may submit a proposal for the Work either individually or combined as indicated on the Proposal Form.
C. A contract may be awarded based on the proposal offering the best value to the Owner for the Project.

1.5 BASIS OF PROPOSALS

A. Owner will be utilizing the competitive sealed proposal procurement method as authorized by Texas Government Code, Title 10, Subtitle F., Chapter 2269, Subchapter D. The selection criteria used to evaluate each proposer's proposal is stipulated below in paragraph "D. Selection Criteria and Points."
B. Not Used.
C. Proposals shall be made on a stipulated sum basis on the attached Proposal Forms.
D. Selection Criteria and Points.
    1. (0-40 points) Construction Price - Base Proposal.
    2. (0-20 points) Construction Time.
    3. (0-10 points) Resume of Project manager.
    4. (0-10 points) Resume of job superintendent.
    5. (0-10 points) Past and current experience on Projects of similar scope, size, complexity, and location. Include the following information: Owner, Project Name, Date Completed, Project Duration, Proposal Cost, Final Cost, Project Manager and Job Superintendent. If a current employee constructed the Project while working for a different employer clearly delineate that relationship.

6. (0-10 points) List of all litigation, claims, or lawsuits made against your company, an Owner or Architect in which you were the contractor, including any Projects that your company failed to fulfill the terms of the contract with an Owner in the last five years. Provide status of each.
7. Letter of Intent to issue Performance and Payment Bonds from proposer's bonding company listing availability of current bonding capacity and amount of Work currently under bond.
8. Ranking and selection of the proposers will be based on the scoring and evaluation of the listed selection criteria determined to provide the best value to the Owner.

E. Additional Requirements
1. For the Project Manager and Job Superintendent, provide the following for each:
   a. Daily responsibilities for the Project.
   b. Formal education level.
   c. History of Work experience.
   d. Personal references including name, position, owner, current telephone number and email address.
2. In addition to requirements of the proposal documents, Owner may require additional information to establish responsibility of Proposer. Owner may further require identification of proposed subcontractors, suppliers and/or other persons and/or organizations proposed for portions of the Work and substantial data to determine their qualifications and experience. If requested, Proposer must submit all data to the Owner. Owner may also consider and use as part of the evaluation the operating costs, maintenance requirements, performance data and guarantees of major items of material and equipment proposed for incorporation in the Work when such data is required to be submitted in the proposal documents or prior to the award of the contract.
3. Owner may conduct such investigations as Owner deems necessary to assist in the evaluation of any proposal and to establish the responsibility, qualifications, and financial ability of Proposer, proposed subcontractors, suppliers and other persons and organizations to perform and furnish the Work in accordance with the proposal documents to Owner's satisfaction within the prescribed time.

1.6 SUBMISSION OF PROPOSALS

A. Address to: City of Midland
Attn: City Secretary's Office
300 North Loraine Street
Midland, TX 79701
or Mail to:

B. Location: City of Midland
Attn: City Secretary's Office
P.O. Box 1152
Midland, TX 79702

C. Date: August 9, 2023

D. Time: 2:00 p.m., local time.

E. Proposals received after the submission time on the due date will not be accepted and will be returned unopened to Proposer.

1.7 PROPOSAL DOCUMENTS

A. Proposal Documents may be examined at the Architect's office and at the following plan rooms:
   1. Dodge Data & Analytics
      806.794.2722
      Kim.mccallon@construction.com
   2. AGC Plan Room
      4500 W Illinois, Suite 201
      Midland, Texas 79703
      432.520.2220
      midland@wtagc.org
   3. Odessa Plan Room
      2706 Henderson
      Odessa, Texas 79764
      432.337.0912
      Odessaplanroom@gmail.com
   4. AGC-Abilene
      3125 S. 27th
      Abilene, Texas 79605
      325.676.7447
      wtagc@sbcglobal.net

B. Proposers may secure copies of Proposal Documents as follows:
   1. By contacting Pam Gonzales at pgonzales@parkhill.com. Additional information can be found at https://parkhill.com/projects-for-bid.
   2. Download documents (.PDF file extension format) from Parkhill's Info Exchange web site after registering as a plan holder with issuing Parkhill office. There is no cost or deposit required for this option.

C. Only Proposers who obtain Proposal Documents through Parkhill will be registered as a document holder (plan holder) and will therefore automatically receive addenda if/when issued.

1.8 ADDENDA

A. Addenda will be issued to document holders by 1 of the 2 following methods:
   1. E-mail notification to document holder with link to download addenda from Parkhill's Info Exchange web site.
   2. For document holders not having e-mail address, addenda may be picked up at the issuing Parkhill office or mailed via the United States Postal Service (USPS).

B. Addenda will not be faxed to document holders.

1.9 PRE-PROPOSAL CONFERENCE

A. A pre-proposal conference will be held on Tuesday, July 18, 2023 at the Project site at 2:00 p.m. local time. Attendance by Proposers is not mandatory.

1.10 PROPOSAL SECURITY

A. Proposal security in the sum of 5 percent of the total proposal amount and in the form of a cashier's check, certified check, or Surety Proposal Bond, shall accompany all proposals as stipulated in the Instructions to Proposers.

1.11 OPENING OF PROPOSALS

A. Proposals will be publicly opened in the City Council Chambers immediately after closing of proposal time to identify the names of the proposer and their respective proposed contract amount. Other contents of the proposals will be afforded security sufficient to preclude disclosure of contents prior to award or rejection action.

B. After opening the Proposals, the Owner will evaluate and rank each Proposal with respect to the published selection criteria described in section titled BASIS OF PROPOSALS. After opening and ranking, an award may be made on the basis of the initially submitted Proposal, without discussion, clarification or modification, or the Owner may discuss with the selected proposer, offers for cost adjustment and other elements of the Proposal. Other than the data read at the Proposal opening, the Owner shall not disclose any information derived from the Proposals submitted by competing firms in conducting such discussions.

C. If the Owner determines that it is unable to reach a satisfactory agreement with the first ranked proposer, the Owner will terminate discussions with that proposer. The Owner will then proceed with negotiations with each successive proposer as they appear in the order of ranking until an agreement is reached, or until the Owner has rejected all Proposals. After termination of discussions with any proposer, Owner will not resume discussions with that proposer.

D. The Owner reserves the right to accept or reject any or all alternates or to accept any combination of alternates considered advantageous to the Owner.

E. The award or rejection action regarding this Proposal is at the sole discretion of the Owner and the Owner makes no warranty regarding this Proposal that a contract will be awarded to any proposer.

F. The Owner agrees that if the Contract is awarded, it will be awarded to the proposer offering the best value to the Owner. The Owner is not bound to accept the lowest priced Proposal if that Proposal is judged not to be the best value for the Owner, as determined by the Owner.

1.12 FORMALITIES

A. The City of Midland reserves the right to waive irregularities and to reject all proposals.

1.13 APPLICABLE GOVERNING LAWS AND REGULATIONS

A. In accordance with the Instruction to Proposers, all proposers shall comply with State Labor Laws concerning wage rates Texas Family Code concerning affidavit of eligibility to submit proposals non-discrimination in employment and employment of historically underutilized businesses.

END OF SECTION

DOCUMENT 00 21 16 - INSTRUCTIONS TO PROPOSERS

ARTICLE 1 - DEFINITIONS

1.1 Proposal Documents include the Proposal Requirements and the proposed Contract Documents. The Proposal Requirements consist of the Request for Proposals, Instructions to Proposers, the proposal form, and other sample proposal and contract forms. The proposed Contract Documents consist of the form of Agreement between the Owner and Contractor, Conditions of the Contract (General, Supplementary and other Conditions), Drawings, Specifications and all Addenda issued prior to execution of the Contract.

1.2 Definitions set forth in the General Conditions of the Contract for Construction, or in other Contract Documents are applicable to the Proposal Documents.

1.3 Addenda are written, or graphic instruments issued by the Architect prior to the execution of the Contract which modify or interpret the Proposal Documents by additions, deletions, clarifications or corrections.

1.4 A Proposal is a complete and properly signed proposal to do the Work for the sums stipulated therein, submitted in accordance with the Proposal Documents.

1.5 The Base Proposal is the sum stated in the Proposal for which the Proposer offers to perform the Work described in the Proposal Documents as the base, to which Work may be added or from which Work may be deleted for sums stated in Alternate Proposals.

1.6 An Alternate Proposal (or Alternate) is an amount stated in the Proposal to be added to or deducted from the amount of the Base Proposal if the corresponding change in the Work, as described in the Proposal Documents, is accepted.

1.8 A Proposer is a person or entity who submits a Proposal.

1.9 A Sub-proposer is a person or entity who submits a proposal to a Proposer for materials, equipment or labor for a portion of the Work.

ARTICLE 2 - PROPOSER'S REPRESENTATIONS

2.1 The Proposer, by making a Proposal, represents that:

2.1.1 The Proposer has read and understands the Proposal Documents and the Proposal is made in accordance therewith.

2.1.2 The Proposer has read and understands the Proposal Documents or contract documents, to the extent that such documentation relates to the Work for which the Proposal is submitted.

2.1.3 The Proposer has visited the site, become familiar with local conditions under which the Work is to be performed and has correlated the Proposer's personal observations with the requirements of the proposed Contract Documents.

2.1.4 The Proposal is based upon the materials, equipment and systems required by the Proposal Documents without exception.

2.1.5 By submitting proposal, each proposer agrees to waive any claim it has or may have against the Owner, the Architect, the Engineer and their respective employees and offices, arising out of or in connection with the administration, evaluation, or recommendation of any proposal; waiver of any requirements under the Proposal Documents; or the Contract Documents; acceptance or rejection of any proposals; and award of the Contract.

ARTICLE 3 - PROPOSAL DOCUMENTS

3.1 COPIES

3.1.1 Proposal may obtain complete sets of the Proposal Documents from Parkhill as stated in Request for Proposals.

3.1.5 Proposal Documents will be issued directly to Subproposers or others unless specifically offered in Request for Proposals.

3.1.6 Proposers shall use complete sets of Proposal Documents in preparing Proposals; neither the Owner nor Architect assumes responsibility for errors or misinterpretations resulting from the use of incomplete sets of Proposal Documents.

3.1.7 In making copies of the Proposal Documents available on the above terms, the Owner and the Architect do so only for the purpose of obtaining Proposals on the Work and do not confer a license or grant permission for any other use of the Proposal Documents.

3.2 INTERPRETATION OR CORRECTION OF PROPOSAL DOCUMENTS

3.2.1 The Proposer shall carefully study and compare the Proposal Documents with each other, and with other work being proposal concurrently or presently under construction to the extent that it relates to the Work for which the Proposal is submitted, shall examine the site and local conditions, and shall at once report to the Architect errors, inconsistencies or ambiguities discovered.

3.2.2 Proposers and Sub-proposers requiring clarification or interpretation of the Proposal Documents shall make a written request which shall reach the Architect at least seven days prior to the date for receipt of Proposals.

3.2.3 Interpretations, corrections and changes of the Proposal Documents will be made by Addendum. Interpretations, corrections and changes of the Proposal Documents made in another manner will not be binding, and Proposers shall not rely upon them.

3.3 SUBSTITUTIONS

3.3.1 The materials, products and equipment described in the Proposal Documents establish a standard of required function, dimension, appearance and quality to be met by any proposed substitution.

3.3.2 No substitution will be considered prior to receipt of Proposals unless written request for approval has been received by the Architect at least 7 days prior to the date for receipt of Proposals. Such requests shall include the name of the material or equipment for which it is to be substituted and a complete description of the proposed substitution including Drawings, performance and test data, and other information necessary for an evaluation. An item by item (line by line) comparison of each item listed in the specification shall be compiled and submitted comparing specified material/product with proposed substitution. A statement setting forth changes in other material, equipment or other portions of the Work including changes in the work of other contracts that incorporation of the proposed substitution would require shall be included. The burden of proof of the merit of the proposed substitution is upon the proposer. Architect's approval is for manufacturer only, and not specific material, system or equipment. Approved manufacturer's material, system or equipment is subject to additional and final review after award of contract and submitted for Architect's approval during Construction Administration submittal/shop drawing review process. The Architect's decision of approval or disapproval of a proposed substitution shall be final.

3.3.3 If the Architect approves a proposed substitution prior to receipt of Proposals, such approval will be set forth in an Addendum. Proposers shall not rely upon approvals made in any other manner.

3.4 ADDENDA

3.4.1 Addenda will be issued via the Architect's Newforma Info Exchange website or via mail (if internet service is not available) to all who are known by the issuing office to have received a complete set of Proposal Documents.

3.4.2 Copies of Addenda will be made available for inspection wherever Proposal Documents are on file for that purpose.

3.4.3 No Addenda will be issued later than 2 days prior to the date for receipt of Proposals except an Addendum withdrawing the request for Proposals or one which includes postponement of the date for receipt of Proposals.

3.4.4 Only Proposers who obtain Proposal Documents through Parkhill will be registered as a document holder (plan holder) and will therefore automatically receive addenda if/when issued.

3.4.5 Each Proposer shall ascertain, prior to submitting a Proposal, that the Proposer has received all Addenda issued, and the Proposer shall acknowledge their receipt in the Proposal.

ARTICLE 4 - PROPOSAL PROCEDURES

4.1 FORM AND STYLE OF PROPOSALS

4.1.1 Proposals shall be submitted on forms identical to the form included with the Proposal Documents.

4.1.2 All blanks on the proposal form shall be filled in by typewriter or manually, in ink.

4.1.3 Where so indicated by the makeup of the proposal form, sums shall be expressed in both words and figures, and in case of discrepancy between the two, the amount written in words shall govern.

4.1.4 Interlineations, alterations and erasures must be initialed by the signer of the Proposal.

4.1.5 All requested Alternates shall be proposed. If no change in cost to the Base Proposal is required, mark "No Change."

4.1.5 Where two or more Proposals for designated portions of the Work have been requested, the Proposer may, without forfeiture of the proposal security, state the Proposer's refusal to accept award of less than the combination of Proposals stipulated by the Proposer. The Proposer shall make no additional stipulations on the proposal form nor qualify the Proposal in any other manner.

4.1.6 Each copy of the Proposal shall include the legal name of the Proposer and a statement that the Proposer is a sole proprietor, partnership, corporation or other legal entity. Each copy shall be signed by the person or persons legally authorized to bind the Proposer to a contract. A Proposal by a corporation shall further give the state of incorporation and have the corporate seal affixed. A Proposal submitted by an agent shall have a current power of attorney attached certifying the agent's authority to bind the Proposer.

4.1.8 All costs associated with the preparation, submission and delivery of Proposal is the sole responsibility of the Proposer.

4.2 PROPOSAL SECURITY

4.2.1 Each Proposal shall be accompanied by a proposal security as stipulated in the Request for Proposals, in the form and amount required, pledging that the Proposer will enter into a Contract with the Owner on the terms stated in the Proposal and will furnish bonds covering the faithful performance of the Contract and payment of all obligations arising thereunder. Should the Proposer refuse to enter into such Contract or fail to furnish such bonds, the amount of the proposal security shall be forfeited to the Owner as liquidated damages, not as a penalty. The amount of the proposal security shall not be forfeited to the Owner in the event the Owner fails to comply with Subparagraph 6.2.1.

4.2.2 The surety bond shall be written on AIA Document A310, Proposal Bond, or a similar standard form of the Surety, and the attorney-in-fact who executes the bond on behalf of the Surety, shall affix to the bond a certified and current copy of the power of attorney.

4.2.3 The Owner will have the right to retain the proposal security of Proposers to whom an award is being considered until either (a) the Contract has been executed and bonds have been furnished, or (b) the specified time has elapsed so that Proposals may be withdrawn, or (c) all Proposals have been rejected.

4.3 SUBMISSION OF PROPOSALS

4.3.1 All copies of the Proposal, the proposal security and other documents required to be submitted with the Proposal shall be enclosed in a sealed opaque envelope. The envelope shall be addressed as indicated in the Request for Proposals and shall be identified with the Project name, the Proposer's name, and address and, if applicable, the designated portion of the Work for which the Proposal is submitted. If the Proposal is sent by mail, the sealed envelope shall be enclosed in a separate mailing envelope with the notation "SEALED PROPOSAL ENCLOSED" on the face thereof.

4.3.2 Proposals shall be deposited at the designated location prior to the time and date for receipt of Proposals. Proposals received after the time and date for receipt of Proposals will be returned unopened.

4.3.3 The Proposer shall assume full responsibility for timely delivery at the location designated for receipt of Proposals.

4.3.4 Oral, telephonic or telegraphic Proposals are invalid and will not receive consideration.

4.3.5 The Proposer shall be responsible for all costs associated with preparing the Proposal Document response. The Owner and Architect shall not incur any costs associated with the production and printing of the Proposal Document and post proposal information.

4.3.6 The Proposer shall prepare 6hard copies and 1 copy in pdf. on a USB flash drive of his proposal information which will be scaled in an opaque envelope.

4.4 MODIFICATION OR WITHDRAWAL OF PROPOSAL

4.4.1 A Proposal may not be modified, withdrawn, or canceled by the Proposer during the stipulated time period following the time and date designated for the receipt of Proposals, and each Proposer so agrees in submitting a Proposal.

4.4.2 Prior to the time and date designated for receipt of Proposals, a Proposal submitted may be modified or withdrawn by notice to the party receiving Proposals at the place designated for receipt of Proposals. Such notice shall be in writing over the signature of the Proposer or by telegram; if by telegram, written confirmation over the signature of the Proposer shall be mailed and postmarked on or before the date and time set for receipt of Proposals. A change shall be so worded as not to reveal the amount of the original Proposal.

4.4.3 Withdrawn Proposals may be resubmitted up to the date and time designated for the receipt of Proposals provided that they are then fully in conformance with these Instructions to Proposers.

ARTICLE 5 - CONSIDERATION OF PROPOSALS

5.1 OPENING OF PROPOSALS

5.1.1 As stated in the Request for Proposals, the properly identified Proposals, received on time, will be opened publicly and will be read aloud. An abstract of the same information may, at the discretion of the Owner, be made available to the Proposers within a reasonable time.

5.2 REJECTION OF PROPOSALS

5.2.1 The Owner shall have the right to reject any, or all Proposals, reject a Proposal not accompanied by a required proposal security, or by other data required by the Proposal Documents, or reject a Proposal which is in any way incomplete or irregular.

5.3 ACCEPTANCE OF PROPOSAL (AWARD)

5.3.1 It is the intent of the Owner to award a Contract to the lowest responsible Proposer provided the Proposal has been submitted in accordance with the requirements of the Proposal Documents and does not exceed the funds available. The Owner shall have the right to waive informalities or irregularities in a Proposal received and to accept the Proposal which, in the Owner's judgment, is in the Owner's own best interests. The issuance of this request for proposals does not obligate the Owner to enter into a contract.

5.3.2 The Owner shall have the right to accept Alternates in any order or combination, unless otherwise specifically provided in the Proposal Documents, and to determine the low Proposer on the basis of the sum of the Base Proposal and Alternates accepted.

5.3.3 Each proposer agrees to waive any claim it has or may have against the Owner, the Architect, and their respective employees, arising out of or in connection with the administration, evaluation, or recommendation of any proposal.

ARTICLE 6 - POST-PROPOSAL INFORMATION

6.1 CONTRACTOR'S QUALIFICATION STATEMENT

6.1.1 Proposers to whom award of a Contract is under consideration shall submit to the Architect, upon request, a properly executed AIA Document A305-2020, Contractor's Qualification Statement, Exhibit A, Exhibit B (except for paragraph B.1) and Exhibit C (except for paragraph C.2). Exhibits D and E are not required.

6.2 OWNER'S FINANCIAL CAPABILITY

6.2.1 The Owner shall, at the request of the Proposer to whom an award of a Contract is under consideration and no later than seven days prior to the expiration of the time for withdrawal of Proposals, furnish to the Proposer reasonable evidence that financial arrangements have been made to fulfill the Owner's obligations under the Contract. Unless such reasonable evidence is furnished, the Proposer will not be required to execute the Agreement between the Owner and Contractor.

6.3 SUBMITTALS

6.3.1 The Proposer shall, as soon as practicable, after notification of selection for the award of a Contract, furnish to the Owner through the Architect in writing:

6.3.1.1 a designation of the Work to be performed with the Proposer's own forces:

6.3.1.2 names of the manufacturers, products and the suppliers of principal items or systems of materials and equipment proposed for the Work; and

6.3.1.3 names of subcontractors, persons, or entities (including those who are to furnish materials or equipment fabricated to a special design) proposed for the principal portions of the Work.

6.3.2 The Proposer will be required to establish, to the satisfaction of the Architect and Owner, the reliability and responsibility of the persons or entities proposed to furnish and perform the Work described in the Proposal Documents.

6.3.3 Prior to the award of the Contract, the Architect will notify the Proposer in writing if either the Owner or Architect, after due investigation, has reasonable objection to a person or entity proposed by the Proposer. If the Owner or Architect has reasonable objection to a proposed person or entity, the Proposer may, at the Proposer's option, (1) withdraw the Proposal, or (2) submit an acceptable substitute person or entity, with an adjustment in the Base Proposal or Alternate Proposal to cover the difference in cost occasioned by such substitution. The Owner may, accept the adjusted proposal price or disqualify, the Proposer. In the event of either withdrawal or disqualification, proposal security will not be forfeited.

6.3.4 Persons and entities proposed by the Proposer and to whom the Owner and Architect have made no reasonable objection must be used on the Work for which they were proposed and shall not be changed except with the written consent of the Owner and Architect.

ARTICLE 7 - PERFORMANCE BOND AND PAYMENT BOND

7.1 BOND REQUIREMENTS

7.1.1 The Proposer shall furnish bonds covering the faithful performance of the Contract and payment of all obligations arising thereunder.

7.1.2 The cost shall be included in the Proposal.

7.2 TIME OF DELIVERY AND FORM OF BONDS

7.2.1 The Proposer shall deliver the required bonds to the Owner prior to the execution of the Contract.

7.2.2 The bonds shall be written on AIA Document A312, Performance Bond and Payment Bond or the Bonding Company's standard bond forms. Both bonds shall be written in the amount of the Contract Sum.

7.2.3 The bonds shall be dated on or after the date of the Contract.

7.2.4 The Proposer shall require the attorney-in-fact who executes the required bonds on behalf of the surety, to affix thereto a certified and current copy of the power of attorney.

ARTICLE 8 - INSURANCE

8.1 INSURANCE REQUIREMENTS

8.1.1 The Proposer shall furnish insurance in the types and amount of coverage required, and shall be secured from sources as defined in the Owner/Contractor Agreement.

8.1.2 The cost shall be included in the Proposal.

8.2 TIME OF DELIVERY AND FORM OF INSURANCE

8.2.1 The Proposer shall deliver the required certificates of insurance coverage to the Owner upon its execution of the Contract.

8.2.2 The insurance certificate shall be written on a form acceptable to the Owner. Insurance shall be written in the amount required by the Contract.

8.2.3 The insurance certificates shall be dated on or before the date of the Contract.

ARTICLE 9 - FORM OF AGREEMENT BETWEEN OWNER AND CONTRACTOR

9.1 FORM TO BE USED

9.1.1 The Agreement for the Work will be written on Owner provided document.

ARTICLE 10 - APPLICABLE GOVERNING LAWS AND REGULATIONS

10.1 WAGE RATES

10.1.1 All Contractors must comply with State Labor Laws as required by current amended provisions of Section 2 of Article 5159a, Texas Civil Statutes. Contractor is required to pay not less than the specified minimum wage rates of the various applicable classes of labor.

10.1.2 The Contractor shall forfeit as a penalty to the State, sixty dollars ($60.00) for each laborer, workman or mechanic employed for each calendar day or portion thereof, if such laborer, workman or mechanic is paid less than the said stipulated rates for any work done under said contract, by Contractor or by their subcontractor.

10.4 NON-DISCRIMINATION

10.4.2 During the proposal and performance of this Contract, the Contractor agrees as follows:

10.4.2.1 The Contractor shall not discriminate against any employee or applicant for employment because of race, color, religion, sex, age, or national origin. The Contractor shall take affirmative action to ensure that applicants are employed, and that employees are treated during employment without regard to their race, color, sex, religion, age, or national origin. Such action shall include, but not be limited to, the following: Employment, upgrading, demotion, or transfer; recruitment or recruitment advertising; layoff or termination; rates of pay or other forms of compensation; and selection for training, including apprenticeship. The Contractor agrees to post in conspicuous places, available to employees or applicants for employment, notices to be provided setting forth the provisions of this non-discrimination article.

10.5 HISTORICALLY UNDERUTILIZED BUSINESS

10.5.2 The Contractor shall include a "Historically Underutilized Business Policy Statement" in all subcontracts pertaining to the Work as follows:

City of Midland is committed to make efforts to assist Historically Underutilized Businesses (HUBs) to receive at least thirty percent (30%) of the total value of all contract awards issued by the state. Therefore, HUBs qualified to do so are encouraged to propose; and all business that propose are encouraged to give particular attention in preparing their proposals to include HUBs as subcontractors and material suppliers at any tier for a total value of at least 30% of the amount of their proposal. **Each proposer is required to state in its proposal (HUB Proposal Supplement) the percentage of the proposal amount represented by women owned HUBs, the percentage represented by minority-owned HUBs, and the combined total of each.**

HUB Subcontracting Program Reporting Policy, Responsibilities at the time of award:

The State of Texas operates under the basic principles of free and vigorous competition. In accordance with House Bill 2626, 73rd Legislature, all state agencies are to give a good faith effort to award at least thirty percent (30%) of the total value of all contracts to certified HUBs. Achievement of the goal may be reached by the state contracting directly with HUB vendors or by the state's general contractors establishing contracts with HUB vendors as subcontractors, suppliers or material providers.

All contractors are required to prepare the reporting forms within the designated time period stated on each form to assist City of Midland's efforts to document HUB vendor usage. Contractors that have demonstrated past HUB participation are still expected to provide documentation at the prescribed times.

General Services Commission (GSC) will assist contractors in identifying HUB businesses, call 512.463.3612. If contractors have difficulty in obtaining HUB vendors or meeting the goal targeted, contractor will be required to provide City of Midland with information under the good faith effort criteria listed below:

Delivery of a written notice to all HUB Subcontractors or Suppliers identified on the GSC HUB Certification Directory, contractor group listings, State Agency listings, other government agencies listings, and to any local HUB who requested information on the job. The notice will contain (1) adequate information about the plans, specifications, and requirements of the Contract and Subcontract work, and (2) a contact person within the Contractor's office to answer questions.

Provide documentation on the type of solicitations made for HUB participation, include records, and submit evidence of correspondence and responses from HUBs. In accordance with normal industry practices, divide contract into small, economically feasible segments which could be performed by HUBs, include dollar amount offered to HUB.

Evidence of the steps taken to assist in financing, bonding, and technical assistance services for HUBs where HUBs are otherwise qualified and information as to the Contractors bonding requirements, the procedure for obtaining any needed bond, and the telephone number of one or more acceptable surety companies contacted. Provide an explanation for rejection to any HUB whose proposal is rejected, unless another HUB is accepted for the same work, as follows: (1) where price competitiveness is not the reason, a written rejection notice will include the reason for rejection, and (2) where price competitiveness is the reason, a meeting will be held, if requested, with the price-rejected HUB to discuss the rejection.

10.5.3 City of Midland will review and evaluate the above documentation on the basis of demonstrated "good faith effort". Additional positive efforts or technical assistance may be provided and/or suggested by GSC. GSC will assist contractors in affirmative action plans to achieve the state's HUB contracting goal, call .512.463.3612.

10.5.4 An Historically Underutilized Business is defined by stature as (a) a corporation formed for profit in which at least 51 percent of the equity is owned by one or more women or Black, Hispanic, Asian Pacific, or Indian Americans, (b) a sole proprietorship 100 percent owned, operated, and controlled by such person(s), (c) a partnership in which such person(s) own at least 51 percent of its assets and interest and have proportionate control of partnership affairs, (d) a joint venture of HUBs, or (e) a supplier contract between an HUB and a prime contractor under which the HUB manufactures, distributes, or warehouses and ships the supplies.

10.5.5 **The proposer shall indicate in the appropriate space on the HUB Proposal Supplement whether or not the proposer meets the definition of an Historically Underutilized Business.**

10.5.6 **The proposer shall also indicate in the appropriate space on the HUB Proposal Supplement whether or not the proposer meets the following definition of a small business:**

A Small Business is a corporation, partnership, sole proprietorship or other legal entity formed for the purpose of making a profit which is independently owned and operated and has either fewer than 100 employees or less than $1,000,000 in gross annual receipts during the past calendar or fiscal year.

END OF SECTION

DOCUMENT 00 26 00 - PROCUREMENT SUBSTITUTION PROCEDURES

1.1 DEFINITIONS

A. Procurement Substitution Requests: Requests for changes in products, materials, equipment, and methods of construction from those indicated in the Procurement and Contracting Documents, submitted prior to receipt of bids.

B. Substitution Requests: Requests for changes in products, materials, equipment, and methods of construction from those indicated in the Contract Documents, submitted following Contract award. See Section 01 25 00 "Substitution Procedures" for conditions under which substitution requests will be considered following Contract award.

1.2 QUALITY ASSURANCE

A. Compatibility of Substitutions: Investigate and document compatibility of proposed substitution with related products and materials. Engage a qualified testing agency to perform compatibility tests recommended by manufacturers.

1.3 PROCUREMENT SUBSTITUTIONS

A. Procurement Substitutions, General: By submitting a bid, the Bidder represents that its bid is based on materials and equipment described in the Procurement and Contracting Documents, including Addenda. Bidders are encouraged to request approval of qualifying substitute materials and equipment when the Specifications Sections list materials and equipment by product or manufacturer name.

B. Procurement Substitution Requests will be received and considered by Owner when the following conditions are satisfied, as determined by Architect; otherwise requests will be returned without action:

1. Extensive revisions to the Contract Documents are not required.
2. Proposed changes are in keeping with the general intent of the Contract Documents, including the level of quality of the Work represented by the requirements therein.
3. The request is fully documented and properly submitted.

1.4 SUBMITTALS

A. Procurement Substitution Request: Submit to Architect. Procurement Substitution Request must be made in writing in compliance with the following requirements:

1. Requests for substitution of materials and equipment will be considered if received no later than 7 days prior to date of bid opening.
2. Submittal Format: Submit 3 copies or 1 PDF copy of each written Procurement Substitution Request, using CSI Substitution Request Form 1.5C. All copies must be legible.
3. Provide product data in a side-by-side, line-by-line review. Substitution Request Form 1.5C received without product data will be returned unanswered. Additionally, provide appropriate drawings, samples, tests, and reports as necessary to support and clarify product data. Attach all as backup data to CSI Substitution Request Form 1.5C.

B. Architect's Action:
   1. Architect may request additional information or documentation necessary for evaluation of the Procurement Substitution Request. Architect will notify all bidders of acceptance of the proposed substitute by means of an Addendum to the Procurement and Contracting Documents.

C. Architect's approval of a substitute during bidding does not relieve Contractor of the responsibility to submit required Shop Drawings and to comply with all other requirements of the Contract Documents.

END OF DOCUMENT

SECTION 00 31 00 – AVAILABLE PROJECT INFORMATION

PART 1 - GENERAL

1.1 SUMMARY

A. Related Sections:
1. Division 01 Specification Sections apply to Work of this Section.

1.2 INFORMATION

A. Property Survey:
1. A survey of the property was authorized by the Owner, and the survey was made by:
Parkhill
1700 W Wall Street
Midland, TX 79701
(432) 697-1447
2. Site layout, Drawings and boundary traverse and closure information included in the Drawings.
3. Property survey and site improvement layout is available for Contractor's information.

1.3 RESPONSIBILITY

A. Proposers are expected to examine the site survey information then determine for themselves the validity of the information contained there-in as it relates to this Project.
B. Architect and Owner do not guarantee continuity of conditions indicated at boring locations and assume no responsibility for variations of subsoil quality or conditions.
C. Architect and Owner assume no responsibility for variations of site survey information.

PART 2 - PRODUCTS (Not Used)

PART 3 - EXECUTION (Not Used)

END OF SECTION

DOCUMENT 00 42 00 - PROPOSAL FORM

Date: _____ 20___

City of Midland
300 North Loraine Street
Midland, Texas 79701

City Secretary:

The undersigned, having carefully examined the specifications, drawings, and related documents entitled:

WEST AND NORTH CITIZENS' COLLECTION STATIONS
MIDLAND, TEXAS

all as prepared by Parkhill 1700 West Wall Street, Suite 100, Midland, Texas 79701; 432.697.1447, as well as having attended a pre-proposal conference and made an on-site inspection of the premises and all other conditions affecting the cost and/or execution of the Work, proposes to furnish all materials, labor, and equipment necessary to complete the Work in accordance with said documents, of which this bid is a part, for the following sum:

I. BASE PROPOSAL:_____Dollars ($_____)

(**Note:** All amounts shall be shown in both written and figure form. In case of discrepancy between the written amount and the figure, the written amount will govern. For alternates, check whether it is an add, deduct or no change.)

The undersigned acknowledges receipt of ___addenda to the Drawings and Project Manual as follows:

No.	Date	No.	Date	No.	Date
No.	Date	No.	Date	No.	Date

(The Proposer is to fill in I.D. Number and date of each thereby acknowledging receipt of Addenda).
If awarded the contract, the undersigned agrees to commence work under this contract on or before a date to be specified in Written Notice to Proceed, but not later than October 02, 2023.

Proposer agrees to pay the Owner $250.00 per day, as liquidated damages, for each day the substantial completion of this Project extends beyond the stipulated substantial completion date.
If notified of the acceptance of this bid within 30 days of the time set for the opening of proposals, Proposer agrees within 10 days of notification, to execute a contract in the form of the on the Owner provided form for the above Work, for the above stated compensation.

PROPOSAL SECURITY, as defined in the Request For Proposals and Instructions to Proposers, which the Undersigned agrees to disposition of, is attached to this Proposal.

Upon acceptance of this Proposal by Owner, Contractor shall furnish, at the time of the signing of the contract, a PERFORMANCE BOND AND LABOR/MATERIAL PAYMENT BOND, in the amount of 100 percent of the Contract Price. Surety shall meet requirements specified in the Owner/Contractor Agreement.

It is understood that the Owner reserves the right to accept or reject any and all Proposals and to waive all formalities in accordance with State law.

ATTACHMENTS

In accordance with Instructions to Proposers, complete the attached forms and submit with the Proposal Form.

Respectfully Submitted,

By:_____

Title:_____

Business Address with Zip Code

(SEAL: If Proposal is by Corporation)

_____

_____

_____

Telephone Number with Area Code _____

Fill in the applicable information:

A Corporation, chartered in the State of _____.

Authorized to do business in the State of Texas.

A Partnership, composed of _____, and

_____and _____.

An Individual operating under the name of _____

_____.

Corporate Seal:

END PROPOSAL FORM

DOCUMENT 00 43 00 - PROCUREMENT FORM SUPPLEMENTS

To: City of Midland

Project: West and North Citizens' Collection Stations

Date: _____

Submitted by: _____
(full name)

(full address) _____

_____

In accordance with Instructions to Proposers and the - Proposal Form, we include the following Appendices listed below. The information provided shall be considered an integral part of the Proposal Form.
The following Appendices are attached to this document:

Appendix A - List of Subcontractors: Include names of all Subcontractors and portions of the Work each Subcontractor will perform.

Appendix B - Resident Bidder Certification.

PROPOSAL FORM SUPPLEMENTS SIGNATURES

The Corporate Seal of

.....
(Proposer - print the full name of your firm)

was hereunto affixed in the presence of:

.....
(Authorized signing officer Title)

(Seal)

.....
(Authorized signing officer Title)

(Seal)

APPENDIX A - LIST OF SUBCONTRACTORS AND MAJOR MATERIAL SUPPLIERS

Herewith is the list of subcontractors and major material suppliers referenced in the proposal submitted by:

Proposer) _____

To (Owner) City of Midland

Dated _____ and which is an integral part of the Proposal Form.

The following work will be performed (or provided) by subcontractors and coordinated by us:

WORK SUBJECT/MATERIAL SUPPLIER	NAME

APPENDIX B - RESIDENT BIDDER CERTIFICATION

RESIDENT BIDDER CERTIFICATION

In order for the proposal to be considered, the following information must be provided. **Failure to complete may result in rejection of the proposal:**

As defined by Texas Government Code Section 2252.01 et seq., a "nonresident bidder" means a bidder whose principal place of business is not in Texas but excludes a contractor whose ultimate parent company or majority owner has its principal place of business in Texas.

I certify that my company is a "resident bidder":

Signature: _____ Date:_____

If you qualify as a "nonresident bidder," you must furnish the following information:
What is your resident state? (The state your principal place of business is located.)

City:_____ State:_____ Zip:_____

Company Name:_____ Address:_____

(A) Does your "residence state" require bidders whose principal place of business is in Texas to underbid bidders whose residence state is in the same as yours by a prescribed amount or percentage to receive a comparable contract? "Residence state" means the state in which the principal place of business is located. YES_____ NO_____

(B) What is the amount or percentage? _____%

I certify that the above information is correct.

_____

Typed Name/Position Company Name

END OF DOCUMENT

SECTION 00 52 00 – AGREEMENT FORM

PART 1 - GENERAL

1.1 APPLICABLE DOCUMENT

A. The Agreement for the Work will be written on the Owner provided form and that follows Section 00 80 10 "Owner Documents."

PART 2 - PRODUCTS (Not Used)

PART 3 - EXECUTION (Not Used

END OF SECTION

DOCUMENT 00 54 10 - WEATHER TABLE (MIDLAND, TX)

The number of calendar days indicated on the Bid Form –Proposal Form - Document 00 10 00 "Proposal" is the contract time allowed to complete the project from Notice to Proceed to Substantial Completion, taking into account the normal weather occurrence as shown in the Table below. Weather occurrences exceeding those listed in the table will be taken into consideration when evaluating a request for extension in contract time.

MONTH	MEAN NUMBER DAYS PRECIPITATION (0.01" OR MORE)	NORMAL PRECIPITATION (WATER EQUIVALENT) (INCHES)	MEAN NUMBER DAYS SNOWFALL (INCLUDING ICE PELLETS/SLEET) (1.0" OR MORE)	AVERAGE NUMBER OF DAYS THAT MIN. TEMP IS < 40
JANUARY	2.8	1.28	0	25.6
FEBRUARY	2.6	1.02	0.2	16.8
MARCH	4	1.95	0	4.8
APRIL	3	1.42	0	2
MAY	4.6	2.00	0	0
JUNE	5.2	2.01	0	0
JULY	4	1.47	0	0
AUGUST	5.6	2.06	0	0
SEPTEMBER	6.6	2.38	0	0
OCTOBER	3.8	1.58	0	3.4
NOVEMBER	2	0.89	0	8.6
DECEMBER	3.6	1.16	0	19.8
ANNUALLY	42.5	15.68	1.9	107.4

This table is based on information from NOAA and measured at the Midland International Airport, Midland, Texas.

Means, normals and averages are based on records covering a period of 5 years from 2016-2020.

SECTION 00 80 10 – OWNER DOCUMENTS

PART 1 - GENERAL

1.1 APPLICABLE DOCUMENT

A. Owner provided documents are as indicated below and that follows this Section.

1. Bid Bond.
2. Payment Bond.
3. Performance Bond.
4. Exhibit D- Building Wage Rate.
5. Conflict of Interest Reporting Requirements.
6. Conflict of Interest Questionnaire.
7. Affidavit of Eligibility.
8. Notice to Bidders.
9. General Conditions of Bidding.
10. Standard Purchase Terms and Conditions.
11. Contract.

PART 2 - PRODUCTS (Not Used)

PART 3 - EXECUTION (Not Used

END OF SECTION

EXHIBIT C

Bonding Requirements

The successful bidder shall be required to furnish a Performance & Payment Bond* for bids in excess of $50,000.00, in an amount equal to one hundred percent (100%) of the total contract price, such bond to be executed in five (5) original counterparts by a Corporate Surety authorized to do business in the State of Texas and acceptable to the City of Midland. All bonds must be executed on forms contained in these contract documents. The form of agreement which the successful bidder, as contractor, will be required to execute is also included herewith. The form of agreement and the form of the bonds should be carefully examined by the bidder.

A certified check, cashier's check, bank money order, or irrevocable letter of credit issued by a bank satisfactory to the City, or a bidder's bond on the form provided, in the amount of five percent (5%) of the largest possible lump sum bid submitted, payable without recourse to the City, must accompany the bidder's proposal, as a guaranty that the bidder will enter a contract and execute the required payment bond and guaranty in the forms provided within fifteen (15) days after notice of award of contract to him. Bids or proposals without the required bid guaranty will not be considered. All bid sureties and payment bonds shall name the City of Midland as Obligee.

*A cash security such as a cashier's check or irrevocable letter of credit issued by a bank satisfactory to the City for 100 % of the contract amount may be supplied in lieu of the Performance and Payment Bonds. The check will be returned un-cashed upon satisfactory completion of the work and evidence of payment of all obligations due for the contract.

BID BOND

THE STATE OF TEXAS §

SURETY NO. _____

COUNTY OF MIDLAND §

KNOW ALL MEN BY THESE PRESENTS, THAT _____

_____

_____

(hereinafter called the Principal), as Principal, and _____

_____

_____

(hereinafter called the Surety), as Surety, are held and firmly bound unto the City of Midland, Texas a home rule municipal corporation of Midland County, Texas, (hereinafter called the Obligee), in the amount of _____

_____ DOLLARS

($_____), for the payment whereof the said Principal and Surety bind themselves, and their heirs, administrators, executors, successors and assigns, jointly and severally, firmly by these presents.

WHEREAS, the Principal has submitted a Bid or Proposal to enter into a certain written Contract with the obligee to_____

_____.

NOW, THEREFORE, THE CONDITION OF THIS OBLIGATION IS SUCH, that if the said Principal shall faithfully enter into such written Contract, then this obligation shall be void; otherwise to remain in full force and effect.

IT IS EXPRESSLY UNDERSTOOD AND AGREED that if said Principal should withdraw its Bid anytime after such Bid is opened and before official rejection to such Bid or, if successful in securing the award thereof, said Principal should fail to enter into the Contract and furnish satisfactory Performance Bond and Payment Bond, the Obligee, in either such events, shall be entitled and is hereby given the right to collect the full amount of this Bid Bond as liquidated damages.

PROVIDED, further that if any legal action be filed upon this Bond venue shall lie in Midland County, Texas

IN WITNESS THEREOF, THE SAID PRINCIPAL AND SURETY do sign and seal this instrument, this _____ day of _____, 20____.

_____	_____
Principal	Surety
By _____	By _____
Address _____	Address _____
_____	_____

APPROVED AS TO FORM:

_____

City Attorney

NOTE: ATTACH POWER OF ATTORNEY

PAYMENT BOND

THE STATE OF TEXAS §

COUNTY OF MIDLAND §

SURETY NO _____

KNOW ALL MEN BY THESE PRESENTS, THAT _____ of the City of _____ of the County of _____ and State of Texas as Principal, and _____, as Surety, are held and firmly bound unto the City of Midland, Texas, as Obligee, in the amount of _____ DOLLARS ($ _____) for the payment whereof the said Principal and Surety bind themselves, their heirs, administrators, executors, successors and assigns, jointly and severally, firmly by these presents.

WHEREAS, the Principal has entered into a certain written contract with the Obligee, dated the _____ day of _____, 20__, for the furnishing of materials, equipment to perform all labor and work necessary for _____, hereof as fully and to the same extent as if copied at length herein.

NOW, THEREFORE, the condition of the obligation is that if the said Principal shall pay all claimants supplying labor and material to him or a subcontractor in the prosecution of the work provided for in said contract, then this obligation shall be null and void; otherwise, it is to remain in full force and effect.

Surety, for value received, stipulates and agrees that no change, extension of time alteration or addition to the terms of the contract, or to the work performed there under, or the plans, specifications of drawings accompanying the same, or any assignment of the contract as may be provided for in the instructions to bidders, shall in anywise affect its obligation on this Bond, and it does waive notice of any such change, extension of

time, alteration or addition to the terms of the contract, assignment thereof, or to the work to be performed there under.

IN WITNESS WHEREOF the said Principal and Surety have signed and sealed this instrument, this _____ day of _____, 20__.

_____	_____
Principal	Surety
By _____	By _____
Address _____	Address _____
_____	_____
_____	_____

APPROVED AS TO FORM:

_____
City Attorney

NOTE: Attach Power of Attorney

Form Revised August 2012

PERFORMANCE BOND

THE STATE OF TEXAS §

COUNTY OF MIDLAND §

SURETY NO _____

KNOW ALL MEN BY THESE PRESENTS, THAT _____ (Hereinafter called the Principal[s]), as Principal(s), and _____ (Hereinafter called the Surety), as Surety, are held and firmly bound unto the City of Midland, Texas a home rule municipal corporation of Midland County, Texas, (hereinafter called the Obligee), in the amount of _____ DOLLARS ($ _____) for the payment whereof the said Principal and surety bind themselves, and their heirs, administrators, executors, successors and assigns, jointly and severally, firmly by these presents.

WHEREAS, the Principal has entered into a certain written contract with the Obligee, dated the _____day of _____, 20___ , for the furnishing of materials and equipment to perform all labor and work necessary for the construction of _____, specifically including in the scope of this work and bond, the additional maintenance guaranty provisions set forth in the contract conditions, which contract is hereby referred to and made a part hereof as fully and to the same extent as if copies at length herein, as well as the Principal's primary obligation to perform according to plans and specifications.

NOW, THEREFORE, THE CONDITION OF THIS OBLIGATION IS SUCH, that if the said Principal shall faithfully perform the work in accordance with the plans, specifications, instructions to bidder, general and special conditions and other contract documents, including any addendum thereto, then this obligation shall be void; otherwise to remain in full force and effect.

PROVIDED further that if any legal action be filed upon this Bond venue shall lie in Midland County, State of Texas.

Surety, for value received, stipulates and agrees that no change, extension of time, alteration or addition to the terms of the contract, or to the work performed thereunder, or the plans, specifications or drawings accompanying the same, or any assignment of the contract as may be provided for in the instructions to bidders, shall in anywise affect its obligation on this Bond, and it does waive notice of any such change, extension of time, alteration or addition to the terms of the contract, assignment thereof, or the work to be performed thereunder.

IN WITNESS WHEREOF, the said Principal and surety do sign and seal this instrument, this _____ day of _____ , 20___.

_____	_____
Principal	Surety
By _____	By _____
Address _____	Address _____
_____	_____
_____	_____

APPROVED AS TO FORM:

_____

City Attorney

NOTE: Attach Power of Attorney

Form Revised August 2012

"General Decision Number: TX20220261 08/05/2022

Superseded General Decision Number: TX20210261

State: Texas

Construction Type: Building

County: Midland County in Texas.

BUILDING CONSTRUCTION PROJECTS (does not include single family homes or apartments up to and including 4 stories).

Note: Contracts subject to the Davis-Bacon Act are generally required to pay at least the applicable minimum wage rate required under Executive Order 14026 or Executive Order 13658. Please note that these Executive Orders apply to covered contracts entered into by the federal government that are subject to the Davis-Bacon Act itself, but do not apply to contracts subject only to the Davis-Bacon Related Acts, including those set forth at 29 CFR 5.1(a)(2)-(60).

If the contract is entered into on or after January 30, 2022, or the contract is renewed or extended (e.g., an option is exercised) on or after January 30, 2022:	. Executive Order 14026 generally applies to the contract. . The contractor must pay all covered workers at least $15.00 per hour (or the applicable wage rate listed on this wage determination, if it is higher) for all hours spent performing on the contract in 2022.
If the contract was awarded on or between January 1, 2015 and January 29, 2022, and the contract is not renewed or extended on or after January 30, 2022:	. Executive Order 13658 generally applies to the contract. . The contractor must pay all covered workers at least $11.25 per hour (or the applicable wage rate listed on this wage determination, if it is higher) for all hours spent performing on that contract in 2022.

The applicable Executive Order minimum wage rate will be adjusted annually. If this contract is covered by one of the Executive Orders and a classification considered necessary for performance of work on the contract does not appear on this wage determination, the contractor must still submit a conformance request.

Additional information on contractor requirements and worker protections under the Executive Orders is available at https://www.dol.gov/agencies/whd/government-contracts.

Modification Number	Publication Date
0	01/07/2022
1	02/25/2022

2 08/05/2022

BOIL0074-003 01/01/2021

	Rates	Fringes
BOILERMAKER	$ 29.47	24.10

ENGI0178-005 06/01/2020

	Rates	Fringes
POWER EQUIPMENT OPERATOR		
(1) Tower Crane	$ 32.85	13.10
(2) Cranes with Pile Driving or Caisson Attachment and Hydraulic Crane 60 tons and above	$ 28.75	10.60
(3) Hydraulic cranes 59 Tons and under	$ 32.35	13.10

* IRON0084-011 06/01/2022

	Rates	Fringes
IRONWORKER, ORNAMENTAL	$ 26.76	7.88

PLUM0404-001 09/01/2020

	Rates	Fringes
PLUMBER	$ 26.05	8.81

* SUTX2014-037 07/21/2014

	Rates	Fringes
BRICKLAYER	$ 20.00	0.00
CARPENTER	$ 13.82 **	0.00
CEMENT MASON/CONCRETE FINISHER	$ 13.76 **	0.00
ELECTRICIAN	$ 23.18	6.31
INSULATOR - MECHANICAL (Duct, Pipe & Mechanical System Insulation)	$ 19.77	7.13
IRONWORKER, REINFORCING	$ 12.27 **	0.00
IRONWORKER, STRUCTURAL	$ 22.16	5.26
LABORER: Common or General	$ 11.80 **	0.00
LABORER: Mason Tender - Brick	$ 11.38 **	0.00
LABORER: Mason Tender - Cement/Concrete	$ 10.58 **	0.00
LABORER: Pipelayer	$ 12.49 **	2.13
LABORER: Roof Tearoff	$ 11.28 **	0.00
OPERATOR:		

Backhoe/Excavator/Trackhoe	$ 14.25 **	0.00
OPERATOR: Bobcat/Skid Steer/Skid Loader	$ 13.93 **	0.00
OPERATOR: Bulldozer	$ 18.29	1.31
OPERATOR: Drill	$ 16.22	0.34
OPERATOR: Forklift	$ 14.83 **	0.00
OPERATOR: Grader/Blade	$ 13.37 **	0.00
OPERATOR: Loader	$ 13.55 **	0.94
OPERATOR: Mechanic	$ 17.52	3.33
OPERATOR: Paver (Asphalt, Aggregate, and Concrete)	$ 16.03	0.00
OPERATOR: Roller	$ 12.70 **	0.00
PAINTER (Brush, Roller, and Spray)	$ 15.00	0.73
PIPEFITTER	$ 25.80	8.55
ROOFER	$ 14.75 **	0.00
SHEET METAL WORKER (HVAC Duct Installation Only)	$ 22.73	7.52
SHEET METAL WORKER, Excludes HVAC Duct Installation	$ 19.50	0.00
TILE FINISHER	$ 11.22 **	0.00
TILE SETTER	$ 14.74 **	0.00
TRUCK DRIVER: Dump Truck	$ 12.39 **	1.18
TRUCK DRIVER: Flatbed Truck	$ 19.65	8.57
TRUCK DRIVER: Semi-Trailer Truck	$ 12.50 **	0.00
TRUCK DRIVER: Water Truck	$ 12.00 **	4.11

WELDERS - Receive rate prescribed for craft performing operation to which welding is incidental.

==========

** Workers in this classification may be entitled to a higher minimum wage under Executive Order 14026 ($15.00) or 13658 ($11.25). Please see the Note at the top of the wage determination for more information.

Note: Executive Order (EO) 13706, Establishing Paid Sick Leave for Federal Contractors applies to all contracts subject to the Davis-Bacon Act for which the contract is awarded (and any solicitation was issued) on or after January 1, 2017. If this contract is covered by the EO, the contractor must provide employees with 1 hour of paid sick leave for every 30 hours

they work, up to 56 hours of paid sick leave each year. Employees must be permitted to use paid sick leave for their own illness, injury or other health-related needs, including preventive care; to assist a family member (or person who is like family to the employee) who is ill, injured, or has other health-related needs, including preventive care; or for reasons resulting from, or to assist a family member (or person who is like family to the employee) who is a victim of, domestic violence, sexual assault, or stalking. Additional information on contractor requirements and worker protections under the EO is available at https://www.dol.gov/agencies/whd/government-contracts.

Unlisted classifications needed for work not included within the scope of the classifications listed may be added after award only as provided in the labor standards contract clauses (29CFR 5.5 (a) (1) (ii)).

The body of each wage determination lists the classification and wage rates that have been found to be prevailing for the cited type(s) of construction in the area covered by the wage determination. The classifications are listed in alphabetical order of ""identifiers"" that indicate whether the particular rate is a union rate (current union negotiated rate for local), a survey rate (weighted average rate) or a union average rate (weighted union average rate).

Union Rate Identifiers

A four letter classification abbreviation identifier enclosed in dotted lines beginning with characters other than ""SU"" or ""UAVG"" denotes that the union classification and rate were prevailing for that classification in the survey. Example: PLUM0198-005 07/01/2014. PLUM is an abbreviation identifier of the union which prevailed in the survey for this classification, which in this example would be Plumbers. 0198 indicates the local union number or district council number where applicable, i.e., Plumbers Local 0198. The next number, 005 in the example, is an internal number used in processing the wage determination. 07/01/2014 is the effective date of the most current negotiated rate, which in this example is July 1, 2014.

Union prevailing wage rates are updated to reflect all rate changes in the collective bargaining agreement (CBA) governing this classification and rate.

Survey Rate Identifiers

Classifications listed under the ""SU"" identifier indicate that no one rate prevailed for this classification in the survey and the published rate is derived by computing a weighted average rate based on all the rates reported in the survey for that classification. As this weighted average rate includes all rates reported in the survey, it may include both union and non-union rates. Example: SULA2012-007 5/13/2014. SU indicates the rates are survey rates based on a weighted average calculation of rates and are not majority rates. LA indicates the State of Louisiana. 2012 is the year of survey on which these classifications and rates are based. The next number, 007 in the example, is an internal number used in producing the

wage determination. 5/13/2014 indicates the survey completion date for the classifications and rates under that identifier.

Survey wage rates are not updated and remain in effect until a new survey is conducted.

Union Average Rate Identifiers

Classification(s) listed under the UAVG identifier indicate that no single majority rate prevailed for those classifications; however, 100% of the data reported for the classifications was union data. EXAMPLE: UAVG-OH-0010 08/29/2014. UAVG indicates that the rate is a weighted union average rate. OH indicates the state. The next number, 0010 in the example, is an internal number used in producing the wage determination. 08/29/2014 indicates the survey completion date for the classifications and rates under that identifier.

A UAVG rate will be updated once a year, usually in January of each year, to reflect a weighted average of the current negotiated/CBA rate of the union locals from which the rate is based.

WAGE DETERMINATION APPEALS PROCESS

1.) Has there been an initial decision in the matter? This can be:

* an existing published wage determination
* a survey underlying a wage determination
* a Wage and Hour Division letter setting forth a position on a wage determination matter
* a conformance (additional classification and rate) ruling

On survey related matters, initial contact, including requests for summaries of surveys, should be with the Wage and Hour National Office because National Office has responsibility for the Davis-Bacon survey program. If the response from this initial contact is not satisfactory, then the process described in 2.) and 3.) should be followed.

With regard to any other matter not yet ripe for the formal process described here, initial contact should be with the Branch of Construction Wage Determinations. Write to:

Branch of Construction Wage Determinations
Wage and Hour Division
U.S. Department of Labor
200 Constitution Avenue, N.W.
Washington, DC 20210

2.) If the answer to the question in 1.) is yes, then an interested party (those affected by the action) can request review and reconsideration from the Wage and Hour Administrator (See 29 CFR Part 1.8 and 29 CFR Part 7). Write to:

Wage and Hour Administrator
U.S. Department of Labor
200 Constitution Avenue, N.W.
Washington, DC 20210

The request should be accompanied by a full statement of the interested party's position and by any information (wage payment data, project description, area practice material, etc.) that the requestor considers relevant to the issue.

3.) If the decision of the Administrator is not favorable, an interested party may appeal directly to the Administrative Review Board (formerly the Wage Appeals Board). Write to:

Administrative Review Board
U.S. Department of Labor
200 Constitution Avenue, N.W.
Washington, DC 20210

4.) All decisions by the Administrative Review Board are final.

==========

END OF GENERAL DECISIO"

NOTICE TO BIDDERS

IF THIS PURCHASE REQUIRES A CONTRACT, THE ATTACHED **CONTRACT AND INSURANCE REQUIREMENTS ARE NON-NEGOTIABLE**. MODIFICATIONS BY BIDDER/COMPANY OF ANY MATERIAL TERM(S) TO THE CONTRACT DOCUMENTS WILL BE DEEMED A NON-RESPONSIVE BID. NON-RESPONSIVE BIDS WILL BE REJECTED. BIDDER/COMPANY MUST BE WILLING TO SIGN THE CONTRACT AS IS AND WITHOUT MODIFICATIONS, PROVIDE PROPERLY EXECUTED BONDS (IF APPLICABLE) AND PROVIDE INSURANCE SPECIFICALLY AS REQUIRED WITHIN THE CONTRACT DOCUMENTS **WITHIN 21 DAYS** OF THE DATE OF THE TRANSMITTAL LETTER.

IF THE SELECTED BIDDER/COMPANY CANNOT MEET THE ABOVE REQUIREMENTS, THEN **THE CITY RESERVES THE RIGHT TO AWARD THIS PURCHASE TO ANOTHER BIDDER**.

IMPORTANT NOTICE – IF THE CONTRACT DOCUMENTS REQUIRE WORKER'S COMPENSATION INSURANCE, BIDDER/COMPANY MUST CARRY WORKER'S COMPENSATION INSURANCE TO BE ELIGIBLE FOR THIS CONTRACT. IF YOU CANNOT PROVIDE WORKER'S COMPENSATION INSURANCE AS REQUIRED BY STATE OF TEXAS STATUTE, WE RESPECTFULLY REQUEST THAT YOU "NO BID" THIS WORK.

COMPLIANCE: Company agrees that it shall comply with Texas Government Code Section 2252.908, *et seq.*, as amended. Company agrees that it shall comply with Texas Local Government Code Section 176.006, *et seq.*, as amended. For further instructions on how to comply with Texas Government Code Section 2252.908 and Texas Local Government Code Section 176.006,

please go to https://www.ethics.state.tx.us/whatsnew/elf_info_form1295.htm and https://www.ethics.state.tx.us/filinginfo/conflict_forms.htm.

ANY VENDOR WHO FAILS TO COMPLY WITH THE TERMS OF THE AWARD **MAY BE DECLARED AN IRRESPONSIBLE VENDOR**. BIDS SUBMITTED BY SAID VENDOR SHALL NOT BE CONSIDERED AGAIN FOR A MINIMUM PERIOD OF SIX MONTHS AS DETERMINED BY THE CITY MANAGER.

IMPORTANT: READ CAREFULLY BEFORE MAKING BID
GENERAL CONDITIONS OF BIDDING

1. All bids are to be submitted as specified in the procurement document(s).

2. Each Bidder is requested to provide: Descriptive literature clearly marked to show each item on this bid. Any catalog or manufacturer's reference in this proposal is descriptive, but not restrictive, and is used only to indicate type and quality. If, however, the bidder proposes similar but not identical terms, he must furnish all particulars. If no mention is made of any exceptions, it is assumed that he is bidding on the article specified and not on an approved equal and he will be required to deliver exact article specified.

3. Prices should be itemized. (Indicate unit price and extend to show total price.) In case of discrepancy between the unit price and the extension, the unit price shall govern.

4. Unit price for each item offered shall include all discounts; e.g., trade, seasonal, etc. with net 30 days payment terms. Discounts shall not be shown as such but shall be incorporated in the base bid price. Any bid showing discounts will be considered an alternate bid. The City of Midland will not be responsible for any goods delivered without a purchase order number.

5. If the Contract is awarded, it will be awarded to either the lowest responsible bidder, or to the bidder who provides goods or services at the best value for the City of Midland. In determining the best value for the City of Midland, the City of Midland may consider the criteria enumerated in Section 252.043 of the Texas Local Government Code. The City of Midland reserves the right to award by item or by total bid, or to reject any or all bids or parts of bids. Further, the City of Midland reserves all rights granted by Section 271.027 of the Texas Local Government Code. The City of Midland reserves the right to award the bid to the lowest responsible bidder.

6. Time of proposed delivery shall be stated in number of calendar days.

7. NOTE: The City of Midland, Texas is exempt from all Federal, State and City tax. Please do not include these taxes in your bid price or invoice. Taxable items must be so designated, and the City will supply vendor with a Tax Exemption Certificate, properly executed.

8. All items are to be delivered, unloaded and stacked at the location indicated on the Bid Request and Purchase Order.

9. All items are to be delivered F.O.B. to the City of Midland, Texas with freight prepaid and included in the bid.

10. Detailed specifications rule over General specifications (headings, etc.)

11. The City of Midland reserves the right to remove a company from the bid list for (1) continued failure to respond to request for bids, (2) failure to deliver merchandise within promised time, or (3) delivery of substandard merchandise.

12. No officer or employee of the City shall have a financial interest, direct or indirect, in any contract with the City, or be financially interested, directly or indirectly, in the sale to the City of any lands, materials, supplies or services except as allowed under chapter 176 of the Local Government Code. Form CIQ shall be submitted and placed on file with the City of Midland.

13. The City shall determine the most advantageous bid for the City and accept the proposal of the responsible party submitting the lowest and/or most advantageous bid or reject any and all bids.

14. The City of Midland, Texas may consider as informal any bid not prepared and submitted in accordance with the provisions hereof, and may waive, in its sole discretion, any informalities.

15. Public Information. To the extent that Bidder is submitting a bid for a contract described by Section 552.371 of the Texas Government Code, Bidder agrees as follows in accordance with Section 552.372(b) of the Texas Government Code: The requirements of Subchapter J, Chapter 552, Government Code, may apply to this bid, and the contractor or vendor agrees that the contract can be terminated if the contractor or vendor knowingly or intentionally fails to comply with a requirement of that subchapter.

STANDARD PURCHASE TERMS AND CONDITIONS
PURCHASING DIVISION, CITY OF MIDLAND, TEXAS

"Seller", as used herein, has the same meaning as "Company". "Buyer", as used herein, has the same meaning as "City".

Seller and Buyer agree as follows:

1. SELLER TO PACKAGE GOODS - Seller will package goods in accordance with good commercial practice. Each shipping container shall be clearly and permanently marked as follows; (a) Seller's name and address, (b) Consignee's name, and address, and purchase order number, (c) Container number and total number of containers, e.g. box 1 of 4 boxes, and (d) the number of the container bearing the packing slip. Seller shall bear cost of packaging unless otherwise provided. Goods shall be suitably packed to secure lowest transportation costs and to conform with requirements of common carriers and any applicable specifications. Buyer's count or weight shall be final and conclusive on shipments not accompanied by packing lists.

2. SHIPMENT UNDER RESERVATION PROHIBITED - Seller is not authorized to ship the goods under reservation and no tender of a bill of lading will serve as a tender of goods.

3. TITLE & RISK OF LOSS - The title and risk of loss of the goods shall not pass to Buyer until Buyer actually receives and takes possession of the goods at the point or points of delivery in Midland, Texas.

4. NO REPLACEMENT OF DEFECTIVE TENDER - Every tender or delivery of goods must fully comply with all provisions of this contract as to time of delivery, quality and the like. If a tender is made which does not fully conform, this shall constitute a breach and Seller shall not have the right to substitute a conforming tender, provided, where the time for performance has yet expired, the Seller may reasonably notify Buyer of his intention to cure and may then make a conforming tender within the contract time but not afterward.

5. PLACE OF DELIVERY - The place of delivery shall be that set forth in the block of the purchase order entitled "deliver to".

6. INVOICES - Seller shall submit separate ORIGINAL invoices, on each purchase order. Invoices shall indicate the purchase order number. All invoices must be mailed to City of Midland, Accounts Payable, P.O. Box 1152, Midland, TX 79702-1152. Payment will be made within 30 days from the date the invoice and properly executed receiving documents are received by City of Midland, Accounts Payable at the above address. Invoices sent to any other address will delay payment.

7. GRATUITIES - The buyer may, by written notice to the seller, cancel this contract without liability to Seller, if it is determined by Buyer that gratuities, in the form of entertainment, gifts, or otherwise, were offered or given by the seller, or any agent or representative of the Seller, to any officer or employee of the City of Midland with a view toward securing a contract or securing favorable treatment with respect to performing of such a contract. In the event this contract is cancelled by Buyer pursuant to this provision, Buyer shall be entitled, in addition to any other rights and remedies, to recover or withhold the amount of the cost incurred by Seller in providing such gratuities.

8. WARRANTY - PRICE -

a. The price to be paid by the Buyer shall be that contained in Seller's bid which Seller warrants to be no higher than Seller's current prices on order by others for products of the kind and specifications covered by this agreement for similar quantities under similar or like conditions and methods of purchase. In the event Seller breaches this warranty, the prices of the items shall be reduced to the Seller's current prices on order by others, or in the alternative, Buyer may cancel this contract without liability to Seller for breach or Seller's actual expense.

b. The Seller warrants that no person or selling agency has been employed or retained to solicit or secure this contract upon an agreement or understanding for commission, percentage, brokerage, or contingent fee excepting bona fide employees or bona fide established commercial or selling agencies maintained by the Seller for the purpose of securing business. For breach or violation of this warranty the Buyer shall have the right or rights to cancel this contract without liability and to deduct from the contract price, or otherwise recover the full amount of such commission, percentage, brokerage or contingent fee.

9. WARRANTY - PRODUCT - Seller shall not limit or exclude any implied warranties and any attempt to do so shall render this contract voidable at the option of the Buyer. Seller warrants that the goods furnished will conform to the specification, drawings, and description listed in the bid invitation, and to the sample(s) furnished by Seller, if any. In the event of a conflict between the specifications, drawings and descriptions, the specifications shall govern.

10. SAFETY WARRANTY - Seller warrants that the product sold to Buyer shall conform to the standards promulgated by the U.S. Department of Labor under the Occupational Safety and Health Act of 1970. In the event the product does not conform to OSHA standards, Buyer may return the product for correction or replacement at the Seller's expense. In the event Seller fails to make the appropriate correction within a reasonable time, correction made by buyer will be at Seller's expense.

11. RIGHT OF INSPECTION - Buyer shall have the right to inspect the goods at delivery before accepting them.

12. CANCELLATION - Buyer shall have the right to cancel for default all or any part of the undelivered portion of this order if Seller breached any of the terms hereof including warranties of Seller if the Seller becomes insolvent or commits acts of bankruptcy. Such right of cancellation is in addition to and not in lieu of any other remedies which Buyer may have in law or equity.

13. TERMINATION - The performance of work under this order may be terminated in whole, or in part by the Buyer in accordance with this provision. Termination of work hereunder shall be effected by the delivery to Seller of a "Notice of Termination" specifying the extent to which performance of work under the order is terminated and the date upon which such termination becomes effective. Such right of termination is in addition to and not in lieu of the rights of Buyer set forth in Clause 13, herein.

14. FORCE MAJEURE - Neither party shall be held responsible for losses, resulting if the fulfillment of any terms or provisions of this contract is delayed or prevented by any cause not within the control of the party whose performance is interfered with, and which by the exercise of reasonable diligence said party is unable to prevent.

15. ASSIGNMENT - DELEGATION - No right or interest in this contract shall be assigned or delegation of any obligation made by Seller without the written permission of the Buyer. Any attempted assignment or delegation by the Seller shall be wholly void and totally ineffective for all purposes unless made in conformity with this paragraph.

16. MODIFICATIONS - This contract can be modified or rescinded only by a writing signed by both of the parties or their duly authorized agents.

17. INTERPRETATION - PAROL EVIDENCE - This writing, plus any specifications for bids and performance provided by Buyer in its advertisement for bids, is intended by the parties as a final expression of this agreement. No course of prior dealings between the parties and no usage of the trade shall be relevant to supplement or explain any term used in this agreement. Acceptance or acquiescence in a course of performance rendered under this agreement shall not be relevant to determine the meaning of this agreement even though the accepting or acquiescing party has knowledge of the performance and opportunity for objection. Whenever a term defined by the Uniform Commercial Code is used in this agreement, the definition contained in the Code is to control.

18. ADVERTISING - Seller shall not advertise or publish without Buyer's prior consent the fact that Buyer has entered into the contract, except to the extent necessary to comply with proper requests for information from an authorized representative of the federal, state or local government.

19. RIGHT TO ASSURANCE - Whenever one party to the contract in good faith has reason to question the other party's intent to perform he may demand that the other party give written assurance of this intent to perform. In the event that a demand is made and no assurance is given within five (5) days, the demanding party may treat this failure as an anticipatory repudiation of the contract.

20. PROTECTION AGAINST ROYALTIES OR PATENT INFRINGEMENT - The Seller shall pay all royalties and license fees, and shall provide for the use of any design, device, material or process covered by letters patent or copyright by suitable legal agreement with Patentee or Owner thereof. The Seller shall defend all suits or claims for infringement of any patent or copyrights and shall indemnify and save the Buyer harmless from any loss on account thereof, except that Buyer shall defend all such suits and claims and shall be responsible for all such loss when a particular design, device, material or process is allowed to the Seller, the Seller shall indemnify and save Buyer harmless from any loss on account thereof. If the material or process specified or required by Buyer is an infringement, the Seller shall be responsible for such loss unless he promptly gives written notice to the buyer of such infringement.

21. TIME - It is hereby expressly agreed and understood that time is of the essence for the performance of this contract, and any failure by contract to meet the time specifications of this agreement will cause Seller to be in default of this agreement.

22. TAX - The City of Midland is exempt from all Federal, State and City tax. Please do not include these taxes in your bid price or invoice. Taxable items must be so designated, and the City will supply vendor with a Tax Exemption Certificate, properly executed.

23. **INSURANCE –**

The following provisions apply unless the agreement is for the supply of goods only:

Seller shall at all times during the term of this agreement maintain and keep in full force and effect insurance in the following types and minimum amounts with companies authorized to do business in the State of Texas:

Commercial General Liability (including Contractual liability):	
-Personal Injury:	$1,000,000.00 per person
	$1,000,000.00 per occurrence
-Property Damage:	$500,000.00 per occurrence
Business Automobile Liability:	$250,000.00 combined single limit - Personal Injury and Property Damage
Worker's Compensation:	Statutory limits
Employers' Liability:	$500,000.00 per accident or occurrence

The Commercial General Liability shall be on a per project or policy aggregate, including completed operations, and shall be on an occurrence basis.

The Workers' Compensation coverage provided by Seller shall inure to the benefit of employees injured during the course and scope of their employment by Seller pursuant to this agreement.

The Business Automobile Liability insurance provided by Seller shall cover any auto for bodily injury and property damage, including owned vehicles, hired and non-owner vehicles, and employee non-ownership, and the amount of such policy shall be a minimum of $250,000.00 covering any vehicle used for the execution of the work that is the subject of this agreement.

All insurance required pursuant to this agreement, except for Worker's Compensation Insurance, shall name the Buyer as an additional insured on a claims occurred basis. All insurance required pursuant to this agreement, including Worker's Compensation Insurance, shall provide for a waiver of subrogation as to the Buyer.

The parties agree that, prior to the execution of the agreement, Seller shall provide one or more certificates of insurance showing that the requirements of this article have been met, and specifically containing, without limitations, the following endorsement:

"The City of Midland is included as an additional insured, on a claims occurred basis, on all policies except for Worker's Compensation. The Seller and Insurer hereby waive all rights of subrogation with respect to claims against the City of Midland, its agents, employees and officers, on all policies of insurance."

Buyer shall be provided the notice by Seller's insurance provider not later than thirty (30) days prior to any reduction or termination of such coverage. Buyer shall not be required to provide any insurance whatsoever pursuant to this agreement.

Seller shall contractually require all contractors, subcontractors, and sub-subcontractors that work on any portion of the work that is the subject of this agreement to obtain insurance coverage that meets or exceeds the policy requirements and minimum amounts specified herein. All contractors, subcontractors, and sub-subcontractors shall obtain insurance policies that provide blanket waivers of subrogation in favor of the City of Midland and policies that name the City of Midland as an additional insured on a claims occurred basis (except workers compensation).

24. ASSIGNMENT - Seller shall not, either directly or indirectly, assign all or any part of this agreement or any interest, right or privilege herein, without the prior written consent of the Buyer. The issue on whether or not to grant consent to an assignment is in the sole discretion of the Buyer.

25. RELEASE - NOTWITHSTANDING ANY OTHER PROVISIONS, SELLER HEREBY RELEASES, ACQUITS, RELINQUISHES AND FOREVER DISCHARGES BUYER, BUYER'S EMPLOYEES AND OFFICERS, FROM ANY AND ALL DEMANDS, CLAIMS, DAMAGES, OR CAUSES OF ACTION OF ANY KIND WHATSOEVER WHICH SELLER HAS OR MIGHT HAVE IN THE FUTURE, INCLUDING BUT NOT LIMITED TO BREACH OF CONTRACT, QUANTUM MERUIT, CLAIMS UNDER THE DUE PROCESS AND TAKINGS CLAUSES OF THE TEXAS AND UNITED STATES CONSTITUTIONS, TORT CLAIMS, OR BUYER'S NEGLIGENCE.

26. GOVERNING LAW AND VENUE - This agreement shall be governed by the laws of the State of Texas. All performance and payment made pursuant to this agreement shall be deemed to have occurred in Midland County, Texas. Exclusive venue for any claims, suits or any other action arising from or connected in any way to this agreement or the performance of this agreement shall be in Midland County, Texas. The obligations and undertakings of each of the parties to this agreement shall be deemed to have occurred in Midland County, Texas.

27. INDEPENDENT CONTRACTOR - It is expressly understood and agreed that Seller shall perform all work and services described herein as an independent contractor and not as an officer, agent, servant or employee of the Buyer; that Seller shall have exclusive control of and the exclusive right to control the details of the services and work performed hereunder, and all persons performing the same; and shall be solely responsible for the acts and omissions of its officers, agents, employees, contractors and subcontractors; that the doctrine of respondeat superior shall not apply as between Buyer and Seller, its officers, agents, employees, contractors and subcontractors; and that nothing herein shall be construed as creating a partnership or joint enterprise between Buyer and Seller. No person performing any of the work and services described hereunder by Seller shall be considered an officer, agent, servant or employee of the Buyer. Further, it is specifically understood and agreed that nothing in this agreement is intended or shall be construed as creating a "Community of Pecuniary Interest" or "An Equal Right of Control" which would give rise to vicarious liability. Seller shall be an independent contractor under this agreement and shall assume all of the rights, obligations and liabilities, applicable to it as such independent contractor hereunder. The Buyer does not have the power to direct the order in which the work is done. The Buyer shall not have the right to control the means, methods or details of the Seller's work. Seller shall assume exclusive responsibility for the work. Seller is entirely free to do the work in its own way.

28. NOTICE OF ALLEGED BREACH; STATUTORY PREREQUISITES - As a condition precedent to filing suit for alleged damages incurred by an alleged breach of an express or implied provision of this agreement, Seller or his legal representative, shall give the City Manager, or any other reasonable official of the Buyer, notice in writing (consisting of one original and seven copies of notice attached to a copy of this agreement) of such damages, duly verified, within one-hundred-twenty (120) days after the same has been sustained. The discovery rule does not apply to the giving of this notice. The notice shall include when, where and how the damages occurred, the apparent extent thereof, the amount of damages sustained, the amount for which the Seller will settle, the physical and mailing addresses of Seller at the time and date the claim was presented and the physical and mailing addresses of Seller for the six months immediately preceding the occurrence of such damages, and the names and addresses of the witnesses upon whom the Seller relies to establish its claim; and a failure to so notify the City Manager within the time and manner provided herein shall exonerate, excuse and except the Buyer from any liability whatsoever. The Buyer is under no obligation to provide notice to Seller that Seller's notice is insufficient. Buyer reserves the right to request reasonable additional information regarding the claim. Said additional information shall be supplied within thirty (30) days after receipt of notice.

The statutory prerequisites outlined herein constitute jurisdictional requirements pursuant to Section 271.154 of the Texas Local Government Code and Section 311.034 of the Texas Government Code. Notwithstanding any other provision, Seller's failure to comply with the requirements herein shall perpetually bar Seller's claim for damages under Chapter 271 of the Texas Local Government Code, and Section 311.034 of the Texas Government Code, regardless if Buyer has actual or constructive notice or knowledge of said claim or alleged damages. Seller agrees that the requirements of this entire agreement are reasonable.

29. INDEMNITY (NOT APPLICABLE TO PURCHASE AGREEMENTS) - SELLER WILL INDEMNIFY AND HOLD HARMLESS AND DEFEND BUYER AND ALL OF BUYER'S OFFICERS, AGENTS AND EMPLOYEES FROM ALL SUITS, ACTIONS, CLAIMS, DAMAGES, PERSONAL INJURIES, LOSSES, PROPERTY DAMAGE AND EXPENSES OF ANY CHARACTER WHATSOEVER, INCLUDING REASONABLE ATTORNEY'S FEES,

BROUGHT FOR OR ON ACCOUNT OF ANY INJURIES OR DAMAGES RECEIVED OR SUSTAINED BY ANY PERSON OR PERSONS OR PROPERTY, ON ACCOUNT OF ANY NEGLIGENT ACT OF SELLER, its agents or employees, or any subcontractor, arising out of, or resulting from, Seller's use of, or activities on, the agreement premises, and Seller will be required to pay any judgment with costs which may be obtained against Buyer or any of its officers, agents or employees, including reasonable attorney's fees.

SELLER SHALL INDEMNIFY AND HOLD HARMLESS AND DEFEND BUYER AND ALL OF BUYER'S OFFICERS, AGENTS AND EMPLOYEES FROM ALL SUITS, ACTIONS, CLAIMS, DAMAGES, ACCIDENTAL DEATH, PERSONAL INJURIES, PROPERTY DAMAGE, LOSSES, AND EXPENSE OF ANY CHARACTER WHATSOEVER INCLUDING REASONABLE ATTORNEY'S FEES, BROUGHT FOR OR ON ACCOUNT OF ANY INJURIES OR DAMAGES RECEIVED OR SUSTAINED BY ANY PERSON OR PERSONS OR PROPERTY, ON ACCOUNT OF ANY NEGLIGENT ACT OF BUYER, BUYER'S OFFICERS, AGENTS AND EMPLOYEES, WHETHER SUCH NEGLIGENT ACT WAS THE SOLE PROXIMATE CAUSE OF THE INJURY OR DAMAGE OR A PROXIMATE CAUSE JOINTLY AND CONCURRENTLY WITH SELLER OR SELLER'S EMPLOYEES, AGENTS OR SUBCONTRACTORS NEGLIGENCE, IN THE EXECUTION, SUPERVISION AND OPERATIONS GROWING OUT OF OR IN ANY WAY CONNECTED WITH THE PERFORMANCE OF THIS AGREEMENT AND SELLER WILL BE REQUIRED TO PAY ANY JUDGMENT WITH COSTS WHICH MAY BE OBTAINED AGAINST BUYER OR ANY OF BUYER'S OFFICERS, AGENTS OR EMPLOYEES, INCLUDING ATTORNEY'S FEES.

30. SOVEREIGN IMMUNITY - By executing this agreement the Buyer is not waiving its right of sovereign immunity. The Buyer is retaining its immunity from suit. The Buyer is not granting consent to be sued by legislative resolution or action. **THERE IS NO WAIVER OF SOVEREIGN IMMUNITY**.

31. THIRD PARTY BENEFICIARY - The Buyer's approval of this agreement does not create a third party beneficiary. There is no third party beneficiary to this agreement. No person or entity who is not a party to this agreement shall have any third party beneficiary or other rights hereunder.

32. ATTORNEY FEES - BY EXECUTING THIS AGREEMENT, SELLER AGREES TO WAIVE AND DOES HEREBY KNOWINGLY, CONCLUSIVELY, VOLUNTARILY AND INTENTIONALLY WAIVE ANY CLAIM IT HAS OR MAY HAVE IN THE FUTURE AGAINST THE BUYER, REGARDING THE AWARD OF ATTORNEY'S FEES, WHICH ARE IN ANY WAY RELATED TO THE AGREEMENT, OR THE CONSTRUCTION, INTERPRETATION OR BREACH OF THE AGREEMENT. THE SELLER SPECIFICALLY AGREES THAT IF THE SELLER BRINGS OR COMMENCES ANY LEGAL ACTION OR PROCEEDING RELATED TO THIS AGREEMENT, THE CONSTRUCTION, INTERPRETATION, VALIDITY OR BREACH OF THIS AGREEMENT, INCLUDING BUT NOT LIMITED TO ANY ACTION PURSUANT TO THE PROVISIONS OF THE TEXAS UNIFORM DECLARATORY JUDGMENTS ACT (TEXAS CIVIL PRACTICE AND REMEDIES CODE SECTION 37.001, ET. SEQ., AS AMENDED), OR CHAPTER 271 OF THE TEXAS LOCAL GOVERNMENT CODE, THE SELLER AGREES TO ABANDON, WAIVE AND RELINQUISH ANY AND ALL RIGHTS TO THE RECOVERY OF ATTORNEY'S FEES TO WHICH SELLER MIGHT OTHERWISE BE ENTITLED.

SELLER AGREES THAT THIS IS THE VOLUNTARY AND INTENTIONAL RELINQUISHMENT AND ABANDONMENT OF A PRESENTLY EXISTING KNOWN RIGHT. SELLER ACKNOWLEDGES THAT IT UNDERSTANDS ALL TERMS AND CONDITIONS OF THE AGREEMENT. THE SELLER FURTHER ACKNOWLEDGES AND AGREES THAT THERE WAS AND IS NO DISPARITY OF BARGAINING POWER BETWEEN THE BUYER AND THE SELLER. THIS SECTION SHALL NOT BE CONSTRUED OR INTERPRETED AS A WAIVER OF SOVEREIGN IMMUNITY.

THE SELLER AND BUYER ARE RELYING ON THEIR OWN JUDGMENT. EACH PARTY HAD THE OPPORTUNITY TO DISCUSS THIS AGREEMENT WITH LEGAL COUNSEL PRIOR TO ITS EXECUTION.

33. CONSIDERATION - The terms of this agreement are supported by good and valuable consideration, the receipt and sufficiency of which is hereby acknowledged by the parties named herein.

34. CERTIFICATION - In accordance with the Texas Local Government Code, the City of Midland Department of Facilities and Fleet Management does hereby certify that the City of Midland is in compliance with Sections 252, 271 and all applicable sections of the Texas Local Government Code and other state law as it applies to procurement and contracting issues.

35. FEDERAL WAGE REQUIREMENTS - If applicable, the Davis-Bacon Act, 29 CFR 5.5, and any related acts or regulations are hereby incorporated by reference and made a part of this agreement and all terms and requirements under said laws, by such incorporation, are made terms and requirements of this agreement, to which the parties to this agreement have agreed to be bound.

36. COMPLIANCE WITH FEDERAL, STATE AND LOCAL LAWS - Seller shall at all times during the term of this agreement comply with applicable federal, state, and local laws regarding Seller's activities pursuant to this agreement, including but not limited to all applicable sections of the Municipal Code of Midland, Texas, as may be amended, said sections being hereby incorporated by reference and made a part of this agreement for all legal purposes. Failure to abide by any such law mentioned herein constitutes grounds for the immediate termination of this agreement.

CONFLICT OF INTEREST QUESTIONNAIRE

FORM CIQ

For vendor doing business with local governmental entity

This questionnaire reflects changes made to the law by H.B. 23, 84th Leg., Regular Session.

This questionnaire is being filed in accordance with Chapter 176, Local Government Code, by a vendor who has a business relationship as defined by Section 176.001(1-a) with a local governmental entity and the vendor meets requirements under Section 176.006(a).

By law this questionnaire must be filed with the records administrator of the local governmental entity not later than the 7th business day after the date the vendor becomes aware of facts that require the statement to be filed. *See* Section 176.006(a-1), Local Government Code.

A vendor commits an offense if the vendor knowingly violates Section 176.006, Local Government Code. An offense under this section is a misdemeanor.

OFFICE USE ONLY

Date Received

1 **Name of vendor who has a business relationship with local governmental entity.**

2 ☐ **Check this box if you are filing an update to a previously filed questionnaire.** (The law requires that you file an updated completed questionnaire with the appropriate filing authority not later than the 7th business day after the date on which you became aware that the originally filed questionnaire was incomplete or inaccurate.)

3 **Name of local government officer about whom the information is being disclosed.**

_____

Name of Officer

4 **Describe each employment or other business relationship with the local government officer, or a family member of the officer, as described by Section 176.003(a)(2)(A). Also describe any family relationship with the local government officer. Complete subparts A and B for each employment or business relationship described. Attach additional pages to this Form CIQ as necessary.**

A. Is the local government officer or a family member of the officer receiving or likely to receive taxable income, other than investment income, from the vendor?

☐ Yes ☐ No

B. Is the vendor receiving or likely to receive taxable income, other than investment income, from or at the direction of the local government officer or a family member of the officer AND the taxable income is not received from the local governmental entity?

☐ Yes ☐ No

5 **Describe each employment or business relationship that the vendor named in Section 1 maintains with a corporation or other business entity with respect to which the local government officer serves as an officer or director, or holds an ownership interest of one percent or more.**

6 ☐ Check this box if the vendor has given the local government officer or a family member of the officer one or more gifts as described in Section 176.003(a)(2)(B), excluding gifts described in Section 176.003(a-1).

7 _____ _____

Signature of vendor doing business with the governmental entity Date

CONFLICT OF INTEREST QUESTIONNAIRE
For vendor doing business with local governmental entity

A complete copy of Chapter 176 of the Local Government Code may be found at http://www.statutes.legis.state.tx.us/Docs/LG/htm/LG.176.htm. For easy reference, below are some of the sections cited on this form.

Local Government Code § 176.001(1-a): "Business relationship" means a connection between two or more parties based on commercial activity of one of the parties. The term does not include a connection based on:

(A) a transaction that is subject to rate or fee regulation by a federal, state, or local governmental entity or an agency of a federal, state, or local governmental entity;

(B) a transaction conducted at a price and subject to terms available to the public; or

(C) a purchase or lease of goods or services from a person that is chartered by a state or federal agency and that is subject to regular examination by, and reporting to, that agency.

Local Government Code § 176.003(a)(2)(A) and (B):

(a) A local government officer shall file a conflicts disclosure statement with respect to a vendor if:

***

(2) the vendor:

(A) has an employment or other business relationship with the local government officer or a family member of the officer that results in the officer or family member receiving taxable income, other than investment income, that exceeds $2,500 during the 12-month period preceding the date that the officer becomes aware that

(i) a contract between the local governmental entity and vendor has been executed; or

(ii) the local governmental entity is considering entering into a contract with the vendor;

(B) has given to the local government officer or a family member of the officer one or more gifts that have an aggregate value of more than $100 in the 12-month period preceding the date the officer becomes aware that:

(i) a contract between the local governmental entity and vendor has been executed; or

(ii) the local governmental entity is considering entering into a contract with the vendor.

Local Government Code § 176.006(a) and (a-1)

(a) A vendor shall file a completed conflict of interest questionnaire if the vendor has a business relationship with a local governmental entity and:

(1) has an employment or other business relationship with a local government officer of that local governmental entity, or a family member of the officer, described by Section 176.003(a)(2)(A);

(2) has given a local government officer of that local governmental entity, or a family member of the officer, one or more gifts with the aggregate value specified by Section 176.003(a)(2)(B), excluding any gift described by Section 176.003(a-1); or

(3) has a family relationship with a local government officer of that local governmental entity.

(a-1) The completed conflict of interest questionnaire must be filed with the appropriate records administrator not later than the seventh business day after the later of:

(1) the date that the vendor:

(A) begins discussions or negotiations to enter into a contract with the local governmental entity; or

(B) submits to the local governmental entity an application, response to a request for proposals or bids, correspondence, or another writing related to a potential contract with the local governmental entity; or

(2) the date the vendor becomes aware:

(A) of an employment or other business relationship with a local government officer, or a family member of the officer, described by Subsection (a);

(B) that the vendor has given one or more gifts described by Subsection (a); or

(C) of a family relationship with a local government officer.



THE CITY OF MIDLAND

CONTRACT

Contract No.

THIS CONTRACT, effective the ___ day of _____, 20__, by and between the City of Midland, hereinafter referred to as "CITY", and _____, hereinafter referred to as "COMPANY", is made for the following considerations:

1. **Cost:** Total Proposal: $ _____ DOLLARS

2. **Scope of Work:** COMPANY shall perform all work described for _____. Said work being more particularly described in the following documents, which are attached hereto and incorporated herein for all purposes.

EXHIBIT A..... Specifications, Proposal or Cost Summary
EXHIBIT B..... Intentionally Omitted
EXHIBIT C..... Bonding instructions for Public Works Contract of $50,000 and more
EXHIBIT D..... Wage Scale

3. **City:** The words "CITY's Representative" or "representative" shall mean _____ or the designee under whose supervision these contract documents, including the plans and specifications, were prepared, or who may inspect work performed under this Contract; or such other representative, supervisor, or inspector as may be authorized by CITY to act in any particular capacity under this Contract.

4. **City's Representative:** CITY's Representative may make periodic visits to the site to observe the progress and quality of the executed work and to determine, in general, if the work is proceeding in accordance with the contract documents. CITY's representative will not be required to make exhaustive or continuous on-site inspections to check the quality or quantity of the work, nor will such representative be responsible for the construction means, methods, techniques, sequences or procedures, or the safety precautions incident thereto. CITY's representative will not be responsible for COMPANY's failure to perform the work in accordance with the contract.

5. **Company:** Unless otherwise stipulated, COMPANY shall provide and pay for all materials, supplies, machinery, equipment, tools, superintendence, labor, insurance, and all water, light, power, fuel,

transportation and all other facilities necessary for the execution and completion of the work covered by the contract documents. Unless otherwise specified, all materials shall be new, and both workmanship and materials shall be of a good quality. COMPANY shall, if required, furnish satisfactory evidence as to the kind and quality of materials.

5.1. COMPANY shall, at its expense, obtain all permits and licenses necessary for the performance of this contract and pay all fees and taxes required by law, and comply with all laws, ordinances, rules and regulations governing COMPANY's performance of the contract, including all environmental laws and regulations, whether state or federal.

5.2. All work shall be done and all materials furnished in strict conformity with the contract and specifications.

6. **Minor Work Not Mentioned:** All minor detail of the work not specifically mentioned in the Specifications but obviously necessary for the proper completion of the work, such as the proper connection of new work to old, shall be considered as incidental to and a part of the work for which the prices are named in the contract. COMPANY will not be entitled to any additional compensation therefor unless specifically stated otherwise. Otherwise the term "extra work" as used in this contract shall mean and include all work that may be required by CITY to be done by COMPANY to accomplish any alteration or addition to the work as shown on the Specifications.

6.1. COMPANY shall perform all extra work under the direction of CITY's Representative when presented with a written work order signed by CITY's Representative, subject, however, to the right of the COMPANY to require written confirmation of such extra work order by CITY. Payment for extra work shall be as agreed in the work order.

7. **Safety:** COMPANY shall at all times exercise reasonable precaution for the safety of employees and others on or near the work and shall comply with all applicable provisions of federal, state and municipal laws. All machinery and equipment and other physical hazards shall be guarded in accordance with federal, state or municipal laws or regulations.

8. **INDEMNITY: COMPANY SHALL INDEMNIFY AND HOLD HARMLESS AND DEFEND CITY AND ALL OF CITY'S OFFICERS, AGENTS AND EMPLOYEES FROM ALL SUITS, ACTIONS, CLAIMS, DAMAGES, PERSONAL INJURIES, ACCIDENTAL DEATH, LOSSES, PROPERTY DAMAGE AND EXPENSES OF ANY CHARACTER WHATSOEVER, INCLUDING ATTORNEY'S FEES, BROUGHT FOR OR ON ACCOUNT OF ANY INJURIES OR DAMAGES RECEIVED OR SUSTAINED BY ANY PERSON OR PERSONS OR**

PROPERTY, ON ACCOUNT OF ANY NEGLIGENT ACT OF COMPANY, THEIR AGENTS OR EMPLOYEES, OR ANY SUBCONTRACTOR, IN THE EXECUTION, SUPERVISION AND OPERATIONS GROWING OUT OF OR IN ANY WAY CONNECTED WITH THE PERFORMANCE OF THIS CONTRACT, AND COMPANY WILL BE REQUIRED TO PAY ANY JUDGMENT WITH COSTS WHICH MAY BE OBTAINED AGAINST CITY OR ANY OF ITS OFFICERS, AGENTS OR EMPLOYEES, INCLUDING ATTORNEY'S FEES. THE OBLIGATIONS CONTAINED IN THIS SECTION 8 SHALL SURVIVE THE TERMINATION OF THIS CONTRACT.

8.1. **COMPANY SHALL INDEMNIFY AND HOLD HARMLESS AND DEFEND CITY AND ALL OF CITY'S OFFICERS, AGENTS AND EMPLOYEES FROM ALL SUITS, ACTIONS, CLAIMS, DAMAGES, PERSONAL INJURIES, ACCIDENTAL DEATH, PROPERTY DAMAGE, LOSSES, AND EXPENSES OF ANY CHARACTER WHATSOEVER INCLUDING ATTORNEY'S FEES, BROUGHT FOR OR ON ACCOUNT OF ANY INJURIES OR DAMAGES RECEIVED OR SUSTAINED BY ANY PERSON OR PERSONS OR PROPERTY, ON ACCOUNT OF ANY NEGLIGENT ACT OF CITY, CITY'S OFFICERS, AGENTS AND EMPLOYEES, WHETHER SUCH NEGLIGENT ACT WAS THE SOLE PROXIMATE CAUSE OF THE INJURY OR DAMAGE OR A PROXIMATE CAUSE JOINTLY AND CONCURRENTLY WITH COMPANY OR COMPANY'S EMPLOYEES, AGENTS OR SUBCONTRACTORS NEGLIGENCE IN THE EXECUTION, SUPERVISION AND OPERATIONS GROWING OUT OF OR IN ANY WAY CONNECTED WITH THE PERFORMANCE OF THIS CONTRACT, AND COMPANY WILL BE REQUIRED TO PAY ANY JUDGMENT WITH COSTS WHICH MAY BE OBTAINED AGAINST CITY OR ANY OF ITS OFFICERS, AGENTS OR EMPLOYEES, INCLUDING ATTORNEY'S FEES. THE OBLIGATIONS CONTAINED IN THIS SECTION 8.1 SHALL SURVIVE THE TERMINATION OF THIS CONTRACT.**

8.2. **COMPANY AGREES THAT IT WILL INDEMNIFY AND SAVE CITY HARMLESS FROM ALL CLAIMS GROWING OUT OF ANY DEMANDS OF SUBCONTRACTORS, LABORERS, WORKMEN, MECHANICS, MATERIALMEN, AND FURNISHERS OF MACHINERY AND PARTS THEREOF, EQUIPMENT, POWER TOOLS AND ALL SUPPLIES, INCURRED IN THE FURTHERANCE OF THE PERFORMANCE OF THIS CONTRACT. WHEN CITY SO DESIRES, COMPANY SHALL FURNISH SATISFACTORY EVIDENCE THAT ALL OBLIGATIONS OF THE NATURE HEREINABOVE DESIGNATED HAVE BEEN PAID, DISCHARGED OR WAIVED. COMPANY, ITS SURETIES AND INSURANCE CARRIERS SHALL DEFEND, INDEMNIFY AND SAVE HARMLESS CITY AND**

ALL OF ITS OFFICERS, AGENTS AND EMPLOYEES FROM ALL SUITS, ACTIONS, OR CLAIMS OF ANY CHARACTER WHATSOEVER, BROUGHT FOR OR ON ACCOUNT OF ANY INJURIES OR DAMAGES RECEIVED OR SUSTAINED BY ANY PERSON OR PERSONS OR PROPERTY, ARISING FROM ANY ACT OF COMPANY OR ANY SUBCONTRACTOR, THEIR AGENTS OR EMPLOYEES, IN THE EXECUTION AND SUPERVISION OF THIS CONTRACT, AND WILL BE REQUIRED TO PAY ANY JUDGMENT WITH COSTS WHICH MAY BE OBTAINED AGAINST CITY OR ANY OF ITS OFFICERS, AGENTS, OR EMPLOYEES INCLUDING ATTORNEY'S FEES. THE OBLIGATIONS CONTAINED IN THIS SECTION 8.2 SHALL SURVIVE THE TERMINATION OF THIS CONTRACT.

9. **Start of Work:** COMPANY shall commence work no later than ten (10) days after receipt of the execution of this document or other written release to proceed and shall complete such work no later than calendar days after release to proceed.

10. **Clean Up:** COMPANY shall promptly remove from CITY's premises all materials condemned by CITY's Representative on account of failure to conform to the contract, whether actually incorporated in the work or not, and COMPANY shall at its own expense promptly replace such condemned materials with other materials conforming to the requirements of the contract. COMPANY shall also bear the expense of restoring all work of other contractors damaged by any such removal or replacement. If COMPANY does not remove and replace any such condemned materials within a reasonable time after a written notice by CITY, CITY may remove and replace such at COMPANY's expense.

11. **Warranty:** Neither the final payment nor any provision in this contract shall relieve COMPANY of responsibility for faulty materials or workmanship, and he shall remedy any defects due thereto and pay for any damage to other work resulting therefrom, which shall appear within a period of one (1) year from the date of substantial completion. CITY shall give notice of observed defects with reasonable promptness.

12. **Remedy:** CITY may, on account of subsequently discovered evidence, withhold whole or part of any payment to such extent as may be necessary to protect itself from loss on account of:

12.1. Defective work not remedied; or

12.2. Claims filed or reasonable evidence indicating possible filing of claims; or

12.3. Failure of COMPANY to make payments promptly to subcontractors or for material or labor which CITY may pay as an agent for the COMPANY; or

12.4. Damages to another contractor or subcontractor.

When the above grounds to withhold payment are removed, or COMPANY provides a surety bond satisfactory to CITY, which will protect CITY in the amount withheld, payment may be released.

13. **Funding Out:** In the event no funds or insufficient funds are appropriated and budgeted or are otherwise unavailable in any fiscal period for contract payments due under the contract, then this contract shall terminate on the last day of the fiscal period for which full appropriations were made, without penalty or expense to CITY of any kind whatsoever.

14. **Wage Scale:** COMPANY agrees to pay all workmen in his employ no less than the generally prevailing wage rate for employees of similar category in the Permian Basin Area, as is depicted in the wage rate scale attached hereto as EXHIBIT D, and incorporated herein by reference for all legal purposes.

14.1. If applicable, the Davis-Bacon Act, 29 CFR 5.5, and any related acts or regulations are hereby incorporated by reference and made a part of this Contract, and all terms and requirements under said laws, by such incorporation, are made terms and requirements of this Contract, to which the parties to this Contract have agreed to be bound.

15. **Prompt Pay Act:** CITY and COMPANY agree that Texas Government Code, Chapter 2251, Payment for Goods and Services (the "Prompt Pay Act") does not waive governmental immunity.

16. **Payment; Retainage:** After all work is completed by COMPANY, including all Change Orders altering the original scope and amount of the contract are completed, and the CITY has inspected and approved that the work is completed and in compliance with the contract and all subsequent Change Orders, the CITY may thereafter issue payment to COMPANY in the amount of the contract and all Change Orders. The CITY shall be the final judge of when the work is completed by COMPANY. The CITY, in its sole discretion, shall determine if the work under the contract and under any Change Orders has been done to the CITY's requirements.

16.1. The CITY may make periodic payments to COMPANY; provided, however, such periodic payments may only be made pursuant to this section, and only after all work and all Change Orders are completed by COMPANY and approved by the CITY. The approval shall be in the CITY's sole discretion. Requests for progress payments may be made to the extent of the materials and labor completed at the end of each month. Upon approval by the CITY or the CITY's representative, the request and invoice shall be forwarded for payment less 5% retainage. The total of these payments shall not exceed 95% of the total contract amount.

17. **Late Completion; Liquidated Damages:** It is hereby understood and mutually agreed, by and between COMPANY and the CITY, that the date of beginning and the time for completion as specified in the contract of the work to be done hereunder are ESSENTIAL CONDITIONS of this contract; and it is further mutually understood and agreed that the work embraced in this contract shall be commenced on a date to be specified in the "Notice to Proceed." COMPANY agrees that said work shall be prosecuted regularly, diligently, and uninterruptedly at such rate of progress as will insure full completion thereof within the time specified. It is expressly understood and agreed, by and between COMPANY and the CITY, that the time for the completion of the work described herein is a reasonable time for the completion of the same, taking into consideration the average climatic range and usual industrial conditions prevailing in this locality.

17.1. In the event COMPANY shall neglect, fail or refuse to complete the work within the time herein specified, or any proper extension thereof granted by the CITY, then COMPANY and COMPANY's surety, if any, shall be liable for and does hereby agree, as a part consideration for the awarding of this contract, to pay to the CITY $500.00, not as a penalty but as liquidated damages for such breach of contract as hereinafter set forth, for each and every day that COMPANY shall be in default after the time stipulated in the contract for completing the work. Further, the CITY shall have the right to cancel this contract for such delay. In the event the CITY cancels this contract pursuant to the terms of this section, the CITY shall pay to COMPANY only those monies deemed appropriate by the CITY, in its sole discretion, to compensate COMPANY for any work actually performed, less any liquidated damages COMPANY owes the CITY.

17.2. The said amount is fixed and agreed upon by and between COMPANY and the CITY because of the impracticability and extreme difficulty of fixing and ascertaining the actual damages the CITY would in such event sustain, and said amount is agreed to be the amount of damages which the CITY would sustain and said amount shall be retained from time to time by the CITY from current periodical estimates.

17.3. It is further agreed that time is of the essence of each and every portion of this contract and of the specifications wherein a definite and certain length of time is fixed for the performance of any act whatsoever; and where under the contract an additional time is allowed for the completion of any work, the new time limit fixed by such extension shall be of the essence of this contract. Provided, that COMPANY shall not be charged with liquidated damages or any excess cost when the CITY determines, in its sole discretion, that COMPANY is without fault and COMPANY's reasons for the time extension are acceptable to the CITY. Provided, further, that COMPANY shall not be charged with liquidated damages or excess cost when the delay in completion of the work is due:

a. To any preference, priority or allocation order duly issued by the Government;

b. To unforeseeable cause beyond the control and without the fault or negligence of COMPANY, including, but not restricted to, acts of God, or of the public enemy, acts of the CITY, acts of another contractor in the performance of a contract with the CITY, fires, floods, epidemics, quarantine restrictions, strikes, freight embargoes, and severe weather; and

c. To any delays of subcontractors or suppliers occasioned by any of the causes specified in subsections (a) and (b) of this article.

17.4. Provided, further, that COMPANY shall, within ten (10) days from the beginning of such delay, unless the CITY shall, in its sole discretion grant a further period of time prior to the date of final settlement of the contract, notify the CITY, in writing, of the causes of the delay, who shall ascertain the facts and extent of the delay and notify COMPANY within a reasonable time of its decision in the matter.

17.5. **COMPANY AGREES THAT THE PAYMENT OF SUCH LIQUIDATED DAMAGES MAY BE RECOVERED BY THE CITY FROM RETAINAGE HELD BY THE CITY. NOTWITHSTANDING ANY OTHER PROVISION HEREOF, COMPANY HEREBY RELEASES, ACQUITS, RELINQUISHES AND FOREVER DISCHARGES CITY, CITY'S EMPLOYEES AND OFFICERS FROM ANY AND ALL DEMANDS, CLAIMS, DAMAGES, OR CAUSES OF ACTION OF ANY KIND WHATSOEVER ARISING FROM THE CITY WITHHOLDING PAYMENT FROM COMPANY AS LIQUIDATED DAMAGES FOR COMPANY'S FAILURE TO COMPLETE THE WORK WITHIN THE TIME SPECIFIED HEREIN, INCLUDING BUT NOT LIMITED TO BREACH OF CONTRACT, QUANTUM MERUIT, CLAIMS UNDER THE DUE PROCESS AND TAKINGS CLAUSES OF THE TEXAS AND UNITED STATES CONSTITUTIONS, TORT CLAIMS, OR CITY'S NEGLIGENCE.**

17.6. **COMPANY SHALL RECEIVE NO FINANCIAL COMPENSATION FOR DELAY OR HINDRANCE TO THE WORK. IN NO EVENT SHALL THE CITY BE LIABLE TO COMPANY OR ANY SUBCONTRACTOR OR SUPPLIER, ANY OTHER PERSON OR ANY SURETY FOR OR ANY EMPLOYEE OR AGENT OF ANY OF THEM, FOR ANY DAMAGES ARISING OUT OF OR ASSOCIATED WITH ANY DELAY OR HINDRANCE TO THE WORK, REGARDLESS OF THE SOURCE OF THE DELAY OR HINDRANCE, INCLUDING EVENTS OF FORCE MAJEURE, AND EVEN IF SUCH DELAY OR HINDRANCE RESULTS FROM, ARISES OUT OF OR IS DUE, IN WHOLE OR IN PART, TO THE NEGLIGENCE OF THE CITY. COMPANY'S SOLE REMEDY IN ANY SUCH CASE SHALL BE AN EXTENSION OF TIME.**

18. **No Third-Party Beneficiary:** CITY's approval of this contract does not create a third-party

beneficiary. There is no third-party beneficiary to this contract. No person or entity who is not a party to this contract shall have any third-party beneficiary or other rights hereunder.

19. WAIVER OF ATTORNEY FEES: BY EXECUTING THIS CONTRACT, COMPANY AGREES TO WAIVE AND DOES HEREBY KNOWINGLY, CONCLUSIVELY, VOLUNTARILY AND INTENTIONALLY WAIVE ANY CLAIM IT HAS OR MAY HAVE IN THE FUTURE AGAINST CITY REGARDING THE AWARD OR ATTORNEY'S FEES, WHICH ARE IN ANY WAY RELATED TO THIS CONTRACT, OR THE CONSTRUCTION, INTERPRETATION OR BREACH OF THIS CONTRACT. COMPANY SPECIFICALLY AGREES THAT IF COMPANY BRINGS OR COMMENCES ANY LEGAL ACTION OR PROCEEDING RELATED TO THIS CONTRACT, THE CONSTRUCTION, INTERPRETATION, VALIDITY OR BREACH OF THIS CONTRACT, INCLUDING, BUT NOT LIMITED TO, ANY ACTION PURSUANT TO THE PROVISIONS OF THE TEXAS UNIFORM DECLARATORY JUDGMENTS ACT (TEXAS CIVIL PRACTICE AND REMEDIES CODE SECTION 37.001, ET SEQ., AS AMENDED), OR CHAPTER 271 OF THE TEXAS LOCAL GOVERNMENT CODE, COMPANY AGREES TO ABANDON, WAIVE AND RELINQUISH ANY AND ALL RIGHTS TO THE RECOVERY OF ATTORNEY'S FEES TO WHICH COMPANY MIGHT OTHERWISE BE ENTITLED.

COMPANY AGREES THAT THIS IS THE VOLUNTARY AND INTENTIONAL RELINQUISHMENT AND ABANDONMENT OF A PRESENTLY-EXISTING KNOWN RIGHT. COMPANY ACKNOWLEDGES THAT IT UNDERSTANDS ALL TERMS AND CONDITIONS OF THIS CONTRACT. COMPANY FURTHER ACKNOWLEDGES AND AGREES THAT THERE WAS AND IS NO DISPARITY OF BARGAINING POWER BETWEEN CITY AND COMPANY. THIS SECTION SHALL NOT BE CONSTRUED OR INTERPRETED AS A WAIVER OR GOVERNMENTAL IMMUNITY AND SHALL SURVIVE THE TERMINATION OF THIS CONTRACT.

COMPANY IS RELYING ON ITS OWN JUDGMENT. COMPANY HAD THE OPPORTUNITY TO DISCUSS THIS CONTRACT WITH COMPETENT LEGAL COUNSEL PRIOR TO ITS EXECUTION. THE OBLIGATIONS CONTAINED IN THIS SECTION 18 SHALL SURVIVE THE TERMINATION OF THIS CONTRACT.

20. **Governmental Immunity:** By executing this contract CITY is not waiving its right of governmental immunity. CITY is retaining its immunity from suit. CITY is not granting consent to be sued by legislative resolution or action.

THERE IS NO WAIVER OF GOVERNMENTAL IMMUNITY.

21. **Insurance:**

COMPANY shall at all times during the term of this Contract maintain and keep in full force and effect insurance in the following types and minimum amounts with companies authorized to do business in the State of Texas:

Commercial General Liability (including Contractual liability):	
-Personal Injury:	$1,000,000.00 per person
	$1,000,000.00 per occurrence
-Property Damage:	$500,000.00 per occurrence
Business Automobile Liability:	$250,000.00 combined single limit - Personal Injury and Property Damage
Workers' Compensation:	Statutory limits
Employers' Liability:	$500,000.00 per accident or occurrence

The Commercial General Liability shall be on a per project aggregate, including completed operations, and shall be on a claims-occurred basis. This insurance shall name CITY as an additional insured and waive subrogation in favor of CITY.

The Business Automobile Liability insurance provided by COMPANY shall cover any auto for bodily injury and property damage, including owned vehicles, hired and non-city vehicles, and employee non-ownership, and the amount of such policy shall be a minimum of $250,000.00 covering any vehicle used for the execution of the work that is the subject of this Contract. This insurance shall name CITY as an additional insured and waive subrogation in favor of CITY.

The Workers' Compensation coverage provided by COMPANY shall inure to the benefit of employees injured during the course and scope of their employment by COMPANY pursuant to this Contract. The Workers' Compensation shall waive all rights of subrogation in favor of CITY.

All insurance required pursuant to this Contract shall provide for a waiver of subrogation in favor of CITY. All insurance required pursuant to this Contract, except for Workers' Compensation Insurance, shall name CITY as an additional insured on a claims occurred basis. CITY shall be provided the notice by COMPANY's insurance provider not later than thirty (30) days prior to any reduction or termination of such coverage.

COMPANY shall contractually require all contractors, subcontractors, and sub-subcontractors that work on any portion of the work that is the subject of this Contract to obtain insurance coverage that meets or exceeds the policy requirements and minimum amounts specified herein. All contractors, subcontractors, and sub-subcontractors shall obtain insurance policies that provide blanket waivers of

subrogation in favor of the City of Midland and policies that name the City of Midland as an additional insured on a claims occurred basis (except workers' compensation).

The parties agree that, prior to the execution of the Contract, COMPANY shall provide one or more certificates of insurance specifically stating that these requirements have been met and subject to the approval of CITY. CITY shall not be required to provide any insurance whatsoever pursuant to this Contract.

COMPANY certifies that the certificate of insurance provided as required herein complies with the requirements of Chapter 1811 of the Texas Insurance Code. COMPANY shall not use an unapproved certificate of insurance or insert inappropriate language on a certificate. Compliance with state law is the sole responsibility of COMPANY.

22. **Assignment**: COMPANY shall not, either directly or indirectly, assign all or any part of this Contract or any interest, right or privilege herein, without the prior written consent of CITY. The issue on whether or not to grant consent to an assignment is in the sole discretion of CITY.

23. **RELEASE: NOTWITHSTANDING ANY OTHER PROVISION CONTAINED HEREIN, COMPANY HEREBY RELEASES, ACQUITS, RELINQUISHES AND FOREVER DISCHARGES CITY AND CITY'S COUNCIL MEMBERS, EMPLOYEES, AND OFFICERS FROM ANY AND ALL DEMANDS, CLAIMS, DAMAGES OR CAUSES OF ACTION OF ANY KIND WHATSOEVER THAT COMPANY HAS OR MIGHT HAVE IN THE FUTURE, INCLUDING, BUT NOT LIMITED TO, BREACH OF CONTRACT, QUANTUM MERUIT, CLAIMS UNDER THE DUE PROCESS AND TAKINGS CLAUSES OF THE TEXAS AND UNITED STATES CONSTITUTIONS, TORT CLAIMS, OR CITY'S NEGLIGENCE. THE OBLIGATIONS CONTAINED IN THIS SECTION SHALL SURVIVE THE TERMINATION OF THIS CONTRACT.**

24. **Governing Law and Venue:** This contract shall be governed by the laws of the State of Texas. All performance and payment made pursuant to this contract shall be deemed to have occurred in Midland County, Texas. The obligations and undertakings of each of the parties to this Agreement shall be deemed to have occurred in Midland County, Texas. Exclusive venue for any claims, suits or any other action arising from or connected in any way to this contract or the performance of this contract shall be in Midland County, Texas.

25. **Independent Contractor:** COMPANY shall perform all work and services described herein as an independent contractor and not as an officer, agent, servant, or employee of CITY. COMPANY shall have exclusive control of, and the exclusive right to control the details of the services and work to be

performed hereunder, and all persons performing the same. COMPANY shall be solely responsible for the acts and omissions of its officers, agents, employees, contractors and subcontractors and the doctrine of respondeat superior shall not apply as between CITY and COMPANY, its officers, agents, employees, contractors and subcontractors. Nothing in this Contract shall be construed as creating a partnership or joint enterprise between CITY and COMPANY. No person performing any of the work and services described hereunder by COMPANY shall be considered an officer, agent, servant or employee of CITY. Further, it is specifically understood and agreed that nothing in this contract is intended or construed as creating a "Community of Pecuniary Interest" or an "Equal Right of Control" which would give rise to vicarious liability.

COMPANY shall be an independent contractor under this Contract and shall assume all of the rights, obligations and liabilities, applicable to it as such independent contractor hereunder. CITY does not have the power to direct the order in which the work is done. CITY shall not have the right to control the means, methods or details of COMPANY's work. COMPANY shall assume exclusive responsibility for the work. COMPANY is entirely free to do the work in its own way.

26. **Notice of Alleged Breach; Statutory Prerequisites:** As a condition precedent to filing suit for alleged damages incurred by an alleged breach of an express or implied provision of this Contract, COMPANY or its legal representative, shall give the City Manager, or any other reasonable official of CITY, notice in writing (consisting of one (1) original and seven (7) copies of notice attached to a copy of this Contract) of such damages, duly verified, within one hundred twenty (120) days after the same has been sustained. The discovery rule does not apply to the giving of this notice. The notice shall include when, where and how the damages occurred, the apparent extent thereof, the amount of damages sustained, the amount for which COMPANY shall settle, the physical and mailing addresses of COMPANY at the time and date the claim was presented and the physical and mailing addresses of COMPANY for the six (6) months immediately preceding the occurrence of such damages, and the names and addresses of the witnesses upon whom COMPANY relies to establish its claim; and a failure to provide such written notification within the time and manner provided herein shall exonerate, excuse and except CITY from any liability whatsoever. CITY is under no obligation to provide notice to COMPANY that COMPANY's notice is insufficient. CITY reserves the right to request additional information regarding the claim. Said additional information shall be supplied within thirty (30) days after receipt of notice.

The statutory prerequisites outlined herein constitute jurisdictional requirements pursuant to Section 271.154 of the Texas Local Government Code and Section 311.034 of the Texas Government Code. Notwithstanding any other provision to the contrary, COMPANY's failure to comply with the

requirements of this Section shall perpetually bar COMPANY's claim for damages under Chapter 271 of the Texas Local Government Code, and Section 311.034 of the Texas Government Code, regardless if CITY has actual or constructive notice or knowledge of said claim or alleged damages. COMPANY agrees that the requirements of this entire Contract are reasonable. The provisions and obligations of this Section shall survive the termination of this Contract.

27. **Consideration:** The terms of this Contract are supported by good and valuable consideration, the receipt and sufficiency of which is hereby acknowledged by the parties named herein.

28. **Termination At Will:** CITY may terminate this Contract at will for no or any reason upon giving at least one hundred eighty (180) days written notice to COMPANY. The parties to this Contract understand and agree that it is in CITY's sole discretion to cancel the Contract during the term of the Contract without penalty to CITY. COMPANY has no expectation and has received no guarantees that this Contract will not be terminated before the end of the Contract term. The parties have bargained for the flexibility of terminating this Contract upon tender of the requisite notice at any time during the term of the Contract. All work and services under the Contract shall be suspended upon termination of the Contract becoming effective.

29. **Compliance:** COMPANY agrees that it shall comply with Texas Government Code Section 2252.908, *et seq.*, as amended. COMPANY agrees that it shall comply with Texas Local Government Code Section 176.006, *et seq.*, as amended.

30. To the extent that Sections 2271.002 and 2274.002 of the Texas Government Code (collectively, the "Anti-Boycott Statutes") apply to this Contract, Company hereby verifies:

- that Company does not boycott Israel and will not boycott Israel during the term of this Contract;
- that Company does not boycott energy companies and will not boycott energy companies during the term of this Contract; and
- that Company does not have a practice, policy, guidance, or directive that discriminates against a firearm entity or firearm trade association and will not discriminate during the term of this Contract against a firearm entity or firearm trade association.

To the extent that the Anti-Boycott Statutes do not apply to this Contract, such verification is not required, and Company shall be deemed to have not made such verification.

31. **Records Retention and Production of Information.** To the extent that this Contract constitutes a contract described by Section 552.371 of the Texas Government Code, COMPANY shall: (i) preserve all contracting information related to this Contract as provided by the records retention requirements

applicable to CITY for the duration of this Contract; (ii) promptly provide to CITY any contracting information related to the Contract that is in the custody or possession of COMPANY on request of CITY; and (iii) on completion of the Contract, either: (a) provide at no cost to CITY all contracting information related to the Contract that is in the custody or possession of COMPANY; or (b) preserve the contracting information related to the Contract as provided by the records retention requirements applicable to CITY.

32. **Public Information.** To the extent that this Contract is a contract described by Section 552.371 of the Texas Government Code, COMPANY agrees as follows in accordance with Section 552.372(b) of the Texas Government Code: The requirements of Subchapter J, Chapter 552, Government Code, may apply to this Contract, and COMPANY agrees that the contract can be terminated if COMPANY knowingly or intentionally fails to comply with a requirement of that subchapter.

33. **Conflict of Terms.** If a conflict of terms or language exists between: (i) any of the provisions of this Contract and (ii) any of the provisions contained in any exhibit(s) attached to this Contract, precedence shall be given to the provisions of this Contract. For the avoidance of any doubt, the provisions contained in this Contract shall supersede any and all conflicting provisions contained in any exhibit(s) attached hereto. Furthermore, the parties acknowledge and agree that any provision contained in an exhibit(s) attached to this Contract that imposes an additional express or implied obligation on CITY is hereby made void and of no force or effect. CITY's sole and exclusive obligations under this Contract are contained in the provisions of this Contract that precede the signature page(s), which evidences the parties' execution.

34. Company agrees that all iron or steel products produced through a manufacturing process and used in the project that is the subject of this Contract shall be produced in the United States in accordance with Government Code § 2252.202, et seq., as amended.

EXECUTED IN DUPLICATE the day and year first above mentioned.

THE CITY OF MIDLAND, TEXAS

By: _____
Morris Williams Jr., Interim City Manager

ATTEST

_____
Marcia Bentley-German, City Governance Officer/City Secretary

APPROVED ONLYAS TO FORM

_____
John Ohnemiller, City Attorney

COMPANY:

By: _____

Name:_____

Title: _____

STATE OF _____ §

§

COUNTY OF_____ §

BEFORE ME, the undersigned authority, on this ____ day of _____, 20____ personally appeared, _____, an officer of _____, known to me to be the person and official whose name is subscribed to the forgoing instrument, and acknowledged to me that he executed the same as the act and deed of said corporation, for the purposes and consideration therein expressed, and in the capacity therein stated.

GIVEN UNDER MY HAND AND SEAL OF OFFICE this the ____day of _____, 20____.

_____

Notary Public, State of _____

SECTION 01 10 00 - SUMMARY

PART 1 - GENERAL

1.1 SUMMARY

A. Section Includes:
   1. Work covered by Contract Documents.
   2. Contractor's use of site and premises.
   3. Permits.

B. Related Requirements:
   1. Other Division 01 Specification Sections apply to Work of this Section.

1.2 WORK COVERED BY CONTRACT DOCUMENTS

A. Identification: West and North Citizens' Collection Stations.
B. Location: Midland, Texas.
C. Owner: City of Midland.
D. Work consists of construction of two citizen collection station facilities. Facility construction includes HMAC and concrete roadways, cast-in-place retaining wall, concrete paved parking lot, electrical services, light poles, and building construction. Building construction includes erection of prefabricated metal building, HVAC, plumbing, electrical, and interior finish.

1.3 CONTRACTOR'S USE OF SITE AND PREMISES

A. Limits on Use of Site:
   1. Owner occupancy.
   2. Work by others.

B. Construction Operations: Limited to areas noted on Drawings.
C. Time Restrictions for Performing Work:
   1. 7:00 a.m. to 7:00 p.m. Monday through Friday.

D. Utility Outages and Shutdowns:
   1. Coordinate and schedule utility outages/shutdown.
   2. Allowed only as preiously agreed upon.
   3. Schedule at least 1 week before outage/shutdown.
   4. Submit early request of outage/shutdown to Engineer itemizing dates, times, and durations.

1.4 PERMITS

A. Furnish all necessary permits for construction of Work including:
   1. Building permit.
   2. Stormwater permit.

PART 2 - PRODUCTS (Not Used)

PART 3 - EXECUTION (Not Used)

END OF SECTION

PART 1 - SECTION 01 20 00 - PRICE AND PAYMENT PROCEDURESGENERAL

1.1 SUMMARY

A. Section Includes:
   1. Inspection and testing allowances.
   2. Schedule of Values.
   3. Application for Payment.
   4. Change Procedures.
   5. Measurement and payment - unit prices.
   6. Alternates.

B. Related Requirements:
   1. Other Division 01 Specification Sections apply to Work of this Section.

1.2 UNIT PRICES

A. Authority: Measurement methods delineated in Section 01 22 00 "Measurement and Payment."

B. Take measurements and compute quantities. Engineer to verify.

C. Unit Quantities: Quantities and measurements indicated in Bid Form are for Contract purposes only. Quantities and measurements supplied or placed in Work determine payment. When actual Work requires more or fewer quantities than those indicated, provide required quantities at contracted unit prices.

D. Payment Includes:
   1. Full compensation for required labor, products, tools, equipment, plant, transportation, services, and incidentals;
   2. Erection, application, or installation of Work item; and
   3. Overhead and profit.

E. Final payment for Work governed by unit prices will be made based on actual measurements and quantities accepted by Engineer multiplied by unit price for Work incorporated in or made necessary by Work.

PART 2 - PRODUCTS (Not Used)

PART 3 - EXECUTION (Not Used)

END OF SECTION

SECTION 01 22 00 – MEASUREMENT AND PAYMENT

PART 1 - GENERAL

1.1 SUMMARY

A. Section Includes:
   1. Procedures for measurement and payment.
   2. Mobilization demobilization.
   3. Unit price items.
   4. Lump sum items.
   5. Bid form-specific payment items.

B. Related Requirements:
   1. Section 00 41 00 "Bid Form."
   2. Other Division 01 Specification Sections apply to Work of the Section.

1.2 PROCEDURES FOR MEASUREMENT AND PAYMENT

A. Unit price Bid on each item as stated in Section 00 41 00 "Bid Form" includes furnishing all labor, superintendence, machinery, equipment, and materials except as otherwise specified, necessary, or incidental to complete various item of Work per Drawings and Specifications.

B. Cost of Work or materials shown on Drawings, or called for in Specifications, and on which no separate payment is made included in Bid prices on various pay items.

C. Payment not made for any items not complete, including all associated incidental Work.

1.3 UNIT PRICE ITEMS

A. Unit price items, not otherwise included herein, paid at a unit price per unit.

B. Payment will include all Work and material for installing unit price item as specified.

C. Measurement made in units shown on Section 00 41 00 "Bid Form."

1.4 LUMP SUM ITEMS

A. Lump sum items include all Work and materials for installing lump sum item as specified.

B. Payment based on percentage complete basis as agreed by Engineer and Contractor.

C. Payment includes all Work and material for installing lump sum Bid item as specified.

1.5 BID FORM-SPECIFIC PAYMENT ITEMS

A. Mobilization (5 percent Maximum):
   1. Measurement: Lump Sum basis.
   2. Payment: Made for mobilizing and demobilizing all equipment, tools, insurance, bonds, and all other job-related items to and from the job site. Price will be on a lump sum basis and shall include all equipment, labor, materials, superintendence, and all incidentals necessary to become fully mobilized at the start of the Project and demobilized when Work is complete. Mobilization related expenses include Contractor's cost for the following: obtaining and setting up construction office facilities, obtaining and paying for electric power required for construction, providing and maintain dust control over the Project working area, temporary fencing, and all other incidentals required for Contractor to complete mobilization. This Bid item shall not exceed 5 percent of the contract price.

B. Erosion Control:
   1. Measurement: Lump Sum basis.
   2. Payment: Made for all costs associated with providing all labor, equipment, materials, and supervision necessary to implement an approved traffic control plan. Payment shall also include all costs associated with grading and constructing any necessary temporary bypass roads needed to keep the flow of traffic moving during construction operations.

C. Excavation:
   1. Measurement: Per Cubic Yard basis.
   2. Payment: Made for providing all labor, equipment, materials, supplies, etc., necessary to excavate the road and drainage ponds to the elevations and grades shown on the Plans. Subgrade preparation to receive concrete structures is incidental to this Bid item. No payment for Work outside limits indicated on Drawings.

D. Embankment (Fill):
   1. Measurement: Per Cubic Yard basis.
   2. Payment: Made for providing all labor, equipment, materials, supplies, etc., necessary to fill the areas shown to construct the access road and drainage channels as shown. Subgrade preparation to receive concrete structures is incidental to this Bid item. No payment for Work outside limits indicated on Drawings.

E. Furnish and Install 2-Inch-Thick Type "B" HMAC, 6-Inch Base Course, 12-Inch Subgrade:
   1. Measurement: Per Square Yard basis.
   2. Payment: Made for providing and installing 2-inch HMAC pavement, 6-inch base course and preparation of 12 inches of subgrade. Pavement shall include all costs associated with providing all labor, equipment, materials, and supervision necessary to install the pavement sections to the grades shown on the Plans in accordance with the Specifications. No payment for Work outside limits indicated on Drawings.

F. Furnish and Install 8-Inch-Thick Concrete Pavement and Reinforcement, 6-Inch Base Course, 12-Inch Subgrade:
   1. Measurement: Per Square Yard basis.
   2. Payment: Made for providing and installing 8-inch concrete pavement and reinforcement, 6-inch base course and preparation of 12 inches of subgrade. Pavement shall include all costs associated with providing all labor, equipment, materials, and supervision necessary to install the pavement sections to the grades shown on the Plans in accordance with the Specifications. 6-inch ramps, transformer pad, condensing unit pad, bollards, and wheel stops are incidental to this Bid item. No payment for Work outside limits indicated on Drawings.

G. Concrete Retaining Wall and Steel Rails:
   1. Measurement: Per Linear Foot basis.
   2. Payment: Made for providing and installing the concrete retaining wall. Payment shall include all costs associated with providing all labor, equipment, materials, supervision, excavation, fine grading, curing, welding, painted steel posts and rails, steel embed plates, steel C-channels, control joints, backfill, and all other appurtenances necessary to install the retaining wall as shown on the Plans and in accordance with the Specifications.

H. Gate at the Entrance:
   1. Measurement: Per Linear Foot basis.
   2. Payment: Made for providing and installing the Wrought Iron/Steel Gate at the Entrance. Payment shall include all costs associated with providing all labor, equipment, materials, and supervision necessary to install the shown on the Drawings and in accordance with the Specifications.

I. Six-Foot Chain Link Fence:
   1. Measurement: Per linear foot.
   2. Payment: Made for providing and installing the chain link fence with e-strand barb wire and screening along property boundary on a linear foot basis. Payment shall include all costs associated with providing all labor, equipment, materials, and supervision necessary to install the shown on the Drawings and in accordance with the Specifications. Sliding gates are incidental to this bid item.

J. Pavement Markings and Striping:
   1. Measurement: Per each basis.
   2. Payment: Made for providing and installing pavement marking symbols. Payment shall include all costs associated with providing all labor, equipment, materials, and supervision necessary to install the pavement markings as shown on the Plans and in accordance with the Specifications.

K. Traffic Signage:
   1. Measurement: Per each basis.
   2. Payment: Made for the installation of traffic signage. Payment shall include costs associated with providing all labor, equipment, materials, and supervision necessary to install traffic signage. Such payment shall be compensation for the complete performance of the work in accordance with the Drawings and provisions of these Specifications.

L. Thirty-Foot by 60-Foot Metal Building:
   1. Measurement: Lump Sum basis.
   2. Payment: Made for costs associated with providing all labor, equipment, materials, and supervision necessary to anchor the structure on site on a lump sum basis. Payment shall include all costs associated with providing all labor, equipment, and supervisions necessary.

M. Electrical Site Work:
   1. Measurement: Lump Sum basis.
   2. Payment: Made for the electrical site improvements. Electrical Work includes grounding system, service pole, weather head, riser, meter can, main disconnect, fusible/non-fusible disconnects, electrical racks, distributions panels, dry-type transformers, in-ground pull boxes, conduits, trenching and backfill, wires/cables, area light fixtures with poles and foundations, interior and exterior light fixtures, receptacles, light switches, data connection points, all building preparations for camera locations, installation of Owner-provided compactor and guard shack, installation of any other electrical items indicated on Contract Drawings, and all associated terminations. Payment includes full compensation for complete performance of the Work in accordance with the Drawings and provisions of these Specifications.

N. Building Plumbing:
   1. Measurement: Lump Sum basis.
   2. Payment: Made for all costs associated with providing all labor, equipment, materials, and supervision necessary to anchor a guard shack and shade structure on site on a lump sum basis. Payment shall include all costs associated with providing all labor, equipment, and supervisions necessary.

O. Building HVAC:
   1. Measurement: Lump Sum basis.
   2. Payment: Made for all costs associated with providing all labor, equipment, materials, and supervision necessary to anchor a guard shack and shade structure on site on a lump sum basis. Payment shall include all costs associated with providing all labor, equipment, and supervisions necessary.

P. Septic Tank.
   1. Measurement: Lump Sum basis.
   2. Payment made for all costs associated with providing the system design, and all labor, equipment, materials, and supervision necessary to install septic tank, absorptive field, and all necessary piping, fittings, clean outs, and valves.

Q. Water Source.
   1. Measurement: Lump Sum basis.
   2. Payment made for all costs associated with providing the system design and all labor, equipment, materials, and supervision necessary to install piping from identified water source to building per plans.

PART 2 - PRODUCTS (Not Used)

PART 3 - EXECUTION (Not Used)

END OF SECTION

SECTION 01 25 00 - SUBSTITUTION PROCEDURES

PART 1 - GENERAL

1.1 SUMMARY

A. Section Includes:
   1. Quality assurance.
   2. Product options.
   3. Product substitution procedures.

B. Related Requirements:
   1. Other Division 01 Specification Sections apply to Work of this Section.

1.2 QUALITY ASSURANCE

A. Contract is based on products and standards established in Contract Documents without consideration of proposed substitutions.

B. Products specified define standard of quality, type, function, dimension, appearance, and performance required.

C. Substitution Proposals: Permitted for specified products except where specified otherwise. Do not substitute products unless Owner accepts substitution and approves in writing.

1.3 PRODUCT OPTIONS

A. See Section 01 60 00 "Product Requirements."

1.4 PRODUCT SUBSTITUTION PROCEDURES

A. Engineer will consider requests for substitutions only within 30 days after date established in Notice to Proceed.

B. Substitutions may be considered when product becomes unavailable through no fault of Contractor.

C. Document each request with complete data, substantiating compliance of proposed substitution with Contract Documents, including:
   1. Manufacturer name and address, product, trade name, model, or catalog number, performance and test data, and reference standards.
   2. Itemized point-by-point comparison of proposed substitution with specified product, listing variations in quality, performance, and other pertinent characteristics.
   3. Reference to Article numbers in Specifications.
   4. Cost data comparing proposed substitution with specified product and amount of net change to Contract Sum.
   5. Changes required in other Work.
   6. Availability of maintenance service and source of replacement parts, as applicable.
   7. Certified test data to show compliance with performance characteristics specified.
   8. Samples when applicable or requested.
   9. Other information as necessary to assist Engineer's evaluation.

D. A request constitutes a representation Contractor:
   1. Investigated proposed product and determined it meets/exceeds quality level of specified product.
   2. Will provide same warranty for substitution as specified product.
   3. Will coordinate installation and make changes to other Work required for Work to complete with no additional cost to Owner.
   4. Waives claims for additional costs/time extension that subsequently become apparent.
   5. Will coordinate installation of accepted substitute, making required changes for Work to complete in all respects.
   6. Will reimburse Owner for review/redesign services associated with reapproval by authorities having jurisdiction.

E. Substitutions not considered when indicated/implied on Shop Drawing or Product Data Submittals without separate written request or acceptance requires revision to Contract Documents.

F. Substitution Submittal Procedure:
   1. Submit requests for substitutions on Contractor-standard or Engineer-provided form.
   2. Submit electronic files to Project website of Request for Substitution for consideration. Limit each request to one proposed substitution.
   3. Submit Shop Drawings, Product Data, and certified test results attesting to proposed product equivalence. Burden of proof is on Contractor.
   4. Engineer will notify Contractor in writing of decision to accept/reject request.

PART 2 - PRODUCTS (Not Used)

PART 3 - EXECUTION (Not Used)

END OF SECTION

SECTION 01 30 00 - ADMINISTRATIVE REQUIREMENTS

PART 1 - GENERAL

1.1 SUMMARY

A. Section Includes:
   1. Project Information Management.
   2. Coordination.
   3. Preconstruction meeting.
   4. Electronic drawing file (digital data) request.
   5. Request for information.
   6. Progress meetings.
   7. Preinstallation meetings.

B. Related Requirements:
   1. Other Division 01 Specification Sections apply to Work of this Section.

1.2 PROJECT INFORMATION MANAGEMENT

A. Project Website:
   1. Use Newforma Info Exchange at https://projects.team-psc.com/UserWeb/Login to send and receive Project information.
   2. Contact Engineer to set up user name and password information.
   3. If Project is not listed when logged in, contact Engineer to add Project to your account.

B. Project information includes, but is not limited to:
   1. Product Submittals.
   2. Requests for Information (RFI).
   3. Applications for Payment.
   4. Schedules.
   5. Construction Change Requests (CCRs).
   6. Closeout Documents.
   7. Construction Document Files.

1.3 COORDINATION

A. Coordinate scheduling, submittals, and Work to assure efficient and orderly sequence of installation of construction elements.

B. Verify utility requirements and characteristics of operating equipment are compatible with building utilities. Coordinate work of various Sections having interdependent responsibilities for installing, connecting to, and placing such equipment in service.

C. Coordinate space requirements and installation of mechanical and electrical work indicated diagrammatically on Drawings. Follow routing as closely as practicable. Utilize spaces efficiently to maximize accessibility for other installations, maintenance, and repairs.

D. In finished building areas, except as otherwise indicated, conceal pipes, ducts, and wiring within construction. Coordinate locations of fixtures and outlets with finish elements as applicable.

E. Coordinate completion and clean-up of Work of separate Sections in preparation for Substantial Completion.

F. After Owner occupancy of premises, coordinate access to site with Owner for correction of defective Work and Work not in accordance with Contract Documents to minimize disruption of Owner's activities.

1.4 PRECONSTRUCTION MEETING

A. Engineer will schedule a meeting after Notice to Proceed.

B. Attendance Required:
   1. Owner.
   2. Engineer.
   3. Contractor.
   4. Major subcontractors.

C. Agenda:
   1. Distribute Contract Documents.
   2. Submit lists of subcontractors and products, Schedule of Values, submittal schedule, and progress schedule.
   3. Designate personnel representing each party in Contract and Engineer.
   4. Procedures and processing field decisions, submittals, substitutions, Applications for Payments, proposal request, Change Orders, Request for Information (RFI), and Contract closeout procedures.
   5. Review Notice to Proceed and Substantial/Final Completion Dates.
   6. Workmen's identification and background checks.
   7. Stormwater Pollution and Prevention Plan (SWPPP) if necessary.
   8. Scheduling:
      a. Use of premises by Owner and Contractor.
      b. Owner's requirements.
      c. Construction facilities and controls provided by Owner.
      d. Temporary utilities provided by Owner.
      e. Security and housekeeping procedures.
      f. Construction progress meetings.
      g. Procedures for testing.
      h. Procedures for maintaining record documents.
      i. Requirements for start-up of equipment.
      j. Inspection and acceptance of equipment put into service during construction.
   9. Scheduling activities of Construction Material Testing lab.

D. Engineer shall record minutes and distribute copies to participants.

1.5 ELECTRONIC DRAWING FILE (DIGITAL DATA) REQUEST

A. During Procurement Phase:
   1. Bidders and Proposers may purchase a Digital Data file. Digital Data file will be provided in software release currently used by Engineer. File will be provided via Engineer's Project website.
   2. AutoCAD Drawing files (.dwg) are available for purchase from Engineer upon request. Cost of files are indicated below plus applicable tax.
      a. 1 – 3 Sheets: $100.00 per sheet.
      b. 4 – 6 Sheets: $400.00 flat fee.
      c. 7 – 9 Sheets: $500.00 flat fee.

3. Revit® BIM Model files (.rvt) are available for purchase from Engineer upon request. Cost of model files are $150.00 for each model plus applicable tax. All details, detail annotation, and reference are omitted and not part of the Model file.
4. Prior to delivery of file(s), purchaser shall sign a Digital Data Licensing Agreement. Payment for Digital Data file(s) shall occur upon delivery of file to purchaser.
5. Digital Data file(s) shall be used only for preparing Bids and Proposals required by this Project not used in any other form in whole or in part.

B. Upon Award of Contract:
1. At pre-construction meeting, Contractor shall bring the executed Digital Data Licensing Agreement (AIA C106-2013) at the end of this Section for release of electronic files. Upon Contractor submitting the executed Agreement to Engineer, Engineer will provide Contractor one electronic copy of the Revit® BIM Model file(s), AutoCAD (.dwg file(s), when Revit® BIM Model file is not available, and Portable Document Format (.pdf) file(s) at no charge within five working days. Note that CAD files associated with the Work can be accessed and exported from the Revit® BIM Model provided to Contractor through Revit® software; therefore, Engineer will not provide individual CAD files. Files and Formats to be as followed:
   a. Civil Overall master file in AutoCAD format.
      1) Overall Site Plan with utility and grading information.
      2) All details, detail annotation, and references are omitted and not part of the AutoCAD file.
   b. Landscape: Overall master file in AutoCAD format.
      1) Overall Site Plan with grading, flatwork, irrigation, and planting plans.
      2) All details, detail annotation, and references are omitted and not part of the AutoCAD file.
   c. Structural: Revit® BIM Model and associated working plans views.
      1) Overall Site Plan with utility and grading information.
      2) All details, detail annotation, and reference are omitted and not part of the AutoCAD file.
   d. Architectural/Interior: Revit® BIM Model and associated working plan views.
      1) Plan views contain overall and enlarged section plan view set-up of floor plans, floor patterns, reflected ceilings, and roof plans only. All plan views contain grids, dimensions, room names, and general annotation.
      2) Reflected Ceiling Plans contain ceilings grids and types only. Lighting and mechanical are provided as part of the MEP Model.
      3) Roof Plans contain grids and general annotation only. Mechanical is provided as part of the MEP Model.
      4) Interior and exterior elevations and schedules.
      5) Finish plans and finish schedules.
      6) All details, details annotation, and references are omitted and not part of the model life.
   e. Mechanical, Electrical, and Plumbing: Revit® BIM Model and associated working plan views.
      1) Plan views contain overall and enlarged plan section view set-up of mechanical, electrical lighting, electrical power, and plumbing plans only.
      2) All details, detail annotation, and references are omitted and not part of the model file.
   f. Other Disciplines: Revit® BIM Model and associated working plan views.

1) Plan views contain overall and enlarged plan section view set-up showing all device locations and general annotation.
2) All details, detail annotation and references are omitted and not part of the model file
3) The Revit All details, detail annotation, and references are omitted and not part of the model file.

2. Revit® BIM Model file provided to Contractor is NOT FOR CONSTRUCTION PURPOSES, but convenience only. This BIM Model will consist of the original model utilized for base bid. It is Contractor responsibility to coordinate all accepted alternated, addenda, RFI, Proposal Request, and any other changes realized during procurement and construction phases. Engineer will not provide up-to-date Contract Documents or update BIM Models to Contractor unless otherwise stated within the Owner/Engineer Agreement.
3. Conformed Construction Documents: If required by Owner/Engineer Agreement, they will be provided in PDF. Conformed Construction Documents are Drawings and Specifications modified to include any Addenda issued before execution of the Contract.
   a. To the extent Conformed Construction Documents are provided to Contractor, the following provisions shall apply:
      1) Conformed Construction Documents, and related information contained therein, are provided for Contractor's convenience only and does not relieve Contractor from Contract Document requirements. Specifically, to the extent that any discrepancy or conflict exist between Issue for Bid documents, including any Addenda issued prior to execution of Contact or Modifications issued after execution of Contact on the one hand, and Conformed Construction Documents on the other; Issue for Bid documents Addenda, and Modifications shall control unless otherwise specified in writing by Engineer.
      2) Contractor shall not use such Drawings, documents, or other data, in whole or in part, for any purpose or project other than this Project, in preparation of Shop Drawings and other submittals.
      3) Contractor acknowledges that such Drawings, documents, or other data obtained prior to use by them for any purpose.
      4) Any Conformed Construction Documents, including any Drawings Specifications, documents, or other data related thereto, are provided "as is" without representation or warranty by Engineer, either expressed or implied.
      5) Contractor acknowledges that Conformed Construction Documents provide by Engineer are as courtesy to Contractor at their specific request, and accordingly, CONTRACTOR HEREBY AGREES TO RELEASE, HOLD HARMLESS, DEFEND, AND INDEMNIFY ENGINEER AND OWNER FROM ANY AND ALL CLAIMS, DEMANDS, OR CAUSES OF ACTION, WHICH CONTRACTOR OR ANY THIRD PARTY MAY HAVE BY REASON OF ANY INJURY OR DAMAGE SUSTAINED BY CONTRACTOR OR THIRD PARTY ARISING OUT OF OR IN ANY WAY RELATED TO THE USE OF SUCH CONFORMED CONSTRUCTION DOCUMENTS.

1.6 REQUEST FOR INFORMATION (RFI)

A. RFI requests from subcontractors or material suppliers will not be considered.
B. Information indicated on RFI shall be complete before submission. If Engineer determines request can be answered with information provided, Engineer will assign RFI tracking number. If Engineer determines request is not an RFI, request will be returned to Contractor electronically and deleted from Engineer's electronic tracking software without assigning an RFI tracking number. A transmittal document returning denied RFI request will be provided with a response indicating action to be taken by Contractor.
C. RFIs may contain more than 1 item when items are related. Otherwise, only 1 item shall be addressed on each RFI request.
D. Allow 7 days for Engineer's response to each RFI.
E. Response to RFI will be issued to Contractor and Owner per Section 01 33 00 "Submittal Procedures."
F. Responses from Engineer are not changes unless issued with a change per Section 01 20 00 "Price and Payment Procedures."

1.7 PROGRESS MEETINGS

A. Schedule and administer monthly meetings throughout Work progress at minimum.
B. Engineer will Arrange meetings, prepare agenda with copies for participants, preside at meetings.
C. Attendance Required:
    1. Owner.
    2. Job superintendent.
    3. Major subcontractors.
    4. Suppliers.
    5. Engineer.
    6. As appropriate to agenda topics for each meeting.
D. Agenda:
    1. Review minutes of previous meetings.
    2. Review Work progress.
    3. Field observations, problems, and decisions.
    4. Identify problems which impede planned progress.
    5. Review submittal schedule and status of submittals.
    6. Review off-site fabrication and delivery schedules.
    7. Maintenance of progress schedule.
    8. Corrective measures to regain projected schedules.
    9. Planned progress during succeeding Work period.
    10. Coordinate projected progress.
    11. Maintenance of quality and work standards.
    12. Effect of proposed changes on progress schedule and coordination.
    13. Testing.
    14. Other business relating to Work.
E. Record minutes and distribute copies within 5 days to Engineer, participants, and those affected by decisions made.

1.8 PREINSTALLATION MEETING

A. When required in individual Specifications, convene a preinstallation meeting at site before installing Work.
B. Require attendance of parties directly affecting, or affected by, Work.
C. Notify Engineer 14 days in advance of meeting date.
D. Prepare agenda and preside at meeting.
   1. Review conditions of installation, preparation, and installation procedures.
   2. Review coordination with related work.
E. Record minutes and distribute copies within 5 days after meeting to participants and copy Engineer.

PART 2 - PRODUCTS (Not Used)

PART 3 - EXECUTION (Not Used)

END OF SECTION

AIA® Document C106™ – 2013

Digital Data Licensing Agreement

AGREEMENT made as of the day of in the year
(In words, indicate day, month and year.)

BETWEEN the Party transmitting Digital Data ("Transmitting Party"):
(Name, address and contact information, including electronic addresses)

Parkhill.

and the Party receiving the Digital Data ("Receiving Party"):
(Name, address and contact information, including electronic addresses)

for the following Project:
(Name and location or address)

The Transmitting Party and Receiving Party agree as follows.

ADDITIONS AND DELETIONS:
The author of this document has added information needed for its completion. The author may also have revised the text of the original AIA standard form. An *Additions and Deletions Report* that notes added information as well as revisions to the standard form text is available from the author and should be reviewed. A vertical line in the left margin of this document indicates where the author has added necessary information and where the author has added to or deleted from the original AIA text.

This document has important legal consequences. Consultation with an attorney is encouraged with respect to its completion or modification.

TABLE OF ARTICLES

1 GENERAL PROVISIONS

2 TRANSMISSION OF DIGITAL DATA

3 LICENSE CONDITIONS

4 LICENSING FEE OR OTHER COMPENSATION

5 DIGITAL DATA

ARTICLE 1 GENERAL PROVISIONS

§ 1.1 The purpose of this Agreement is to grant a license from the Transmitting Party to the Receiving Party for the Receiving Party's use of Digital Data on the Project, and to set forth the license terms.

§ 1.2 This Agreement is the entire and integrated agreement between the parties. Except as specifically set forth herein, this Agreement does not create any other contractual relationship between the parties.

Init.
/

AIA Document C106™ – 2013. Copyright © 2007 and 2013 by The American Institute of Architects. All rights reserved. The "American Institute of Architects," "AIA," the AIA Logo, and "AIA Contract Documents" are registered trademarks and may not be used without permission. This document was produced by AIA software at 10:39:56 ET on 08/31/2021 under Order No.7734716058 which expires on 11/18/2021, is not for resale, is licensed for one-time use only, and may only be used in accordance with the AIA Contract Documents® Terms of Service. To report copyright violations, e-mail copyright@aia.org.
User Notes: (862876232)

§ 1.3 For purposes of this Agreement, the term Digital Data is defined to include only those items identified in Article 5 below.

§ 1.3.1 Confidential Digital Data is defined as Digital Data containing confidential or business proprietary information that the Transmitting Party designates and clearly marks as "confidential."

ARTICLE 2 TRANSMISSION OF DIGITAL DATA

§ 2.1 The Transmitting Party grants to the Receiving Party a nonexclusive limited license to use the Digital Data identified in Article 5 solely and exclusively to perform services for, or construction of, the Project in accordance with the terms and conditions set forth in this Agreement.

§ 2.2 The transmission of Digital Data constitutes a warranty by the Transmitting Party to the Receiving Party that the Transmitting Party is the copyright owner of the Digital Data, or otherwise has permission to transmit the Digital Data to the Receiving Party for its use on the Project in accordance with the terms and conditions of this Agreement.

§ 2.3 If the Transmitting Party transmits Confidential Digital Data, the transmission of such Confidential Digital Data constitutes a warranty to the Receiving Party that the Transmitting Party is authorized to transmit the Confidential Digital Data. If the Receiving Party receives Confidential Digital Data, the Receiving Party shall keep the Confidential Digital Data strictly confidential and shall not disclose it to any other person or entity except as set forth in Section 2.3.1.

§ 2.3.1 The Receiving Party may disclose the Confidential Digital Data as required by law or court order, including a subpoena or other form of compulsory legal process issued by a court or governmental entity. The Receiving Party may also disclose the Confidential Digital Data to its employees, consultants or contractors in order to perform services or work solely and exclusively for the Project, provided those employees, consultants and contractors are subject to the restrictions on the disclosure and use of Confidential Digital Data as set forth in this Agreement.

§ 2.4 The Transmitting Party retains its rights in the Digital Data. By transmitting the Digital Data, the Transmitting Party does not grant to the Receiving Party an assignment of those rights; nor does the Transmitting Party convey to the Receiving Party any right in the software used to generate the Digital Data.

§ 2.5 To the fullest extent permitted by law, the Receiving Party shall indemnify and defend the Transmitting Party from and against all claims arising from or related to the Receiving Party's modification to, or unlicensed use of, the Digital Data.

ARTICLE 3 LICENSE CONDITIONS

The parties agree to the following conditions on the limited license granted in Section 2.1:
(State below rights or restrictions applicable to the Receiving Party's use of the Digital Data, requirements for data format, transmission method or other conditions on data to be transmitted.)

This Digital Data is part of the Transmitting Party's Instruments of Service and shall not be used by Receiving Party or anyone else receiving this data through or from the Receiving Party for any purpose other than as a convenience in the preparation of bid submittals, shop drawings, coordination drawings, construction phase submittals, and field layout and staking required by the Owner for the exclusive use of the referenced Project. Any use or reuse by the Receiving Party or by others will be at the Receiving Party's sole risk and without liability or legal exposure to Transmitting Party. The Receiving Party agrees to make no claim and hereby waive, to the fullest extent permitted by law, any claim or cause of action of any nature against Transmitting Party, its officers, directors, employees, or subconsultants that may arise out of or in connection with Receiving Party's use of this Digital Data.
Receiving party or any third party, to the fullest extent permitted by law, shall indemnify and hold harmless the Transmitting Party against all damages, liabilities or costs, including reasonable attorney's fees and defense costs arising out of or resulting from Receiving Party or any third parties use of this Digital Data.

No representation as to the compatibility of this Digital Data with Receiving Party's hardware or software is provided.

This Digital Data is not a Construction Document. Differences may exist between this Digital Data and corresponding two-dimensional hard-copy Construction Document. The Transmitting Party makes no representation regarding the

AIA Document C106™ – 2013. Copyright © 2007 and 2013 by The American Institute of Architects. All rights reserved. The "American Institute of Architects," "AIA," the AIA Logo, and "AIA Contract Documents" are registered trademarks and may not be used without permission. This document was produced by AIA software at 10:39:56 ET on 08/31/2021 under Order No.7734716058 which expires on 11/18/2021, is not for resale, is licensed for one-time use only, and may only be used in accordance with the AIA Contract Documents® Terms of Service. To report copyright violations, e-mail copyright@aia.org.
User Notes: (862876232)

accuracy or completeness of the Digital Data the Receiving Party receives. In the event that a conflict arises between the signed/sealed two-dimensional hard-copy Construction Document prepared by Transmitting Party and the Digital Data, the signed/sealed two-dimensional hard-copy Construction Document shall govern. The Receiving Party is responsible for determining if any conflict exists. By the Receiving Party's use of this Digital Data, Receiving Party is not relieved of their duty to fully comply with the Contract Documents, including, and without limitation, the need to check, confirm and coordinate all dimensions and details, field measurements, verify field conditions and coordination of work with that of other contractors for the Project.

Because information presented in the Digital Data can be modified, unintentionally or otherwise, the Transmitting Party reserves the right to remove all indicia of ownership and/or involvement from each Digital Data.

Under no circumstances shall delivery of this Digital Data for use by the Receiving Party be deemed a sale of document ownership by Transmitting Party, and no warranties, either express or implied, of merchantability or fitness for any particular purpose is made. In no event shall the Transmitting Party be liable for any loss of profit or any consequential damages as a result of the Receiving Party's use or reuse of this Digital Data.

The Digital Data file does not necessarily contain all the information that is required to produce finished Construction Documents. Because of this, there may be data within the Digital Data that is missing, incomplete or even contradictory to the information provided in the final two dimensional Construction Documents.

Professional judgment will need to be used by the Receiving Party, along with reasonable expectations and interpretations in order to use the Digital Data for its intended purpose. Should the Transmitting Party provide revised and updated copies of the Digital Data to the Receiving Party throughout the Project, all terms and conditions of this agreement will be applicable and unchanged for all subsequent transmissions of the Digital Data.

ARTICLE 4 LICENSING FEE OR OTHER COMPENSATION

The Receiving Party agrees to pay the Transmitting Party the following fee for the Receiving Party's use of the Digital Data:
(State the fee, in dollars, or other method by which the Receiving Party will compensate the Transmitting Party for the Receiving Party's use of the Digital Data.)

DURING PROCUREMENT PHASE

.dwg Files
1-3 Sheets $125.00 per sheet plus applicable tax
4-6 Sheets $500.00 flat fee plus applicable tax
7-9 Sheets $700 flat fee plus applicable tax

.rvt Files
Revit Models are $300.00 per model plus applicable tax

UPON AWARD OF CONTRACT:
No service fee will be required for delivery of the electronic file(s).

ARTICLE 5 DIGITAL DATA

The Parties agree that the following items constitute the Digital Data subject to the license granted in Section 2.1:
(Identify below, in detail, the information created or stored in digital form the parties intend to be subject to this Agreement.)

[Revit Models (.rvt files)]
[AutoCAD (.dwg files)]
[Portable Document Format (.pdf)]

AIA Document C106™ – 2013. Copyright © 2007 and 2013 by The American Institute of Architects. All rights reserved. The "American Institute of Architects," "AIA," the AIA Logo, and "AIA Contract Documents" are registered trademarks and may not be used without permission. This document was produced by AIA software at 10:39:56 ET on 06/01/2021 under Order No.7734716058 which expires on 11/18/2021, is not for resale, is licensed for one-time use only, and may only be used in accordance with the AIA Contract Documents® Terms of Service. To report copyright violations, e-mail copyright@aia.org.
User Notes: (862876232)

This Agreement is entered into as of the day and year first written above and will terminate upon Substantial Completion of the Project, as that term is defined in AIA Document A201™–2017, General Conditions of the Contract for Construction, unless otherwise agreed by the parties and set forth below.
(Indicate when this Agreement will terminate, if other than the date of Substantial Completion.)

None

PARKHILL

TRANSMITTING PARTY *(Signature)*	**RECEIVING PARTY** *(Signature)*
(Printed name and title)	*(Printed name and title)*

AIA Document C106™ – 2013. Copyright © 2007 and 2013 by The American Institute of Architects. All rights reserved. The "American Institute of Architects," "AIA," the AIA Logo, and "AIA Contract Documents" are registered trademarks and may not be used without permission. This document was produced by AIA software at 10:39:56 ET on 08/31/2021 under Order No.7734716058 which expires on 11/18/2021, is not for resale, is licensed for one-time use only, and may only be used in accordance with the AIA Contract Documents® Terms of Service. To report copyright violations, e-mail copyright@aia.org.
User Notes: (862876232)

SECTION 01 32 16 - CONSTRUCTION PROGRESS SCHEDULE

PART 1 - GENERAL

1.1 SUMMARY

A. Section Includes:
   1. Submittals.
   2. Bar Gantt chart schedules.
   3. Review and evaluation.
   4. Updating schedules.
   5. Distribution.

B. Related Sections:
   1. Other Division 01 Specification Sections apply to Work of this Section.

1.2 SUBMITTALS

A. Post as electronic file to Project website.

B. Submit initial progress schedule for Engineer review within 15 days after established Notice to Proceed date.

C. Schedule Updates:
   1. Submit with each Application for Payment.
   2. Projected and actual percent of completion.
   3. Completion progress by listed activity and subactivity to within 5 working days prior to submittal.
   4. Changes in Work scope and activities modified since submittal.
   5. Delays in submittals or resubmittals, deliveries, or Work.
   6. Revised projections of progress and completion.

D. Narrative Progress Report:
   1. Submit with each Application for Payment.
   2. Summary of Work completed during past period between reports.
   3. Work planned during next period.
   4. Explanation of differences between summary of Work completed and Work planned in previously-submitted report.
   5. Current and anticipated delaying factors and estimated impact on other activities and completion milestones.
   6. Corrective action taken or proposed.

1.3 BAR GANTT CHART SCHEDULES

A. Format Bar Gantt chart Schedule to include at least:
   1. Identification and listing, in chronological order, activities reasonably required to complete Work including:
      a. Subcontract Work.
      b. Major equipment design, fabrication, factory testing, and delivery dates including required lead times.
      c. Move-in and other preliminary activities.
      d. Equipment and equipment system test and startup activities.
      e. Project closeout and cleanup.

f. Work sequences, constraints, and milestones.

2. Listings identified by Specification Section number.

3. Identification of:
   a. Horizontal time frame by year, month, and week.
   b. Duration, early start, and completion for each activity and subactivity.
   c. Critical activities and Project float.
   d. Sub-schedules to further define critical portions of Work.

1.4 REVIEW AND EVALUATION

A. Participate in joint review and evaluation of schedules with Engineer at each Progress Meeting or Application for Payment submittals.
B. Evaluate Project status to determine Work behind and ahead of schedule.
C. After review, revise schedules incorporating results of review and resubmit within 10 days.

1.5 UPDATING SCHEDULES

A. Maintain schedules to record actual start and finish dates of completed activities.
B. Indicate progress of each activity to date of revision with projected completion date of each activity. Update schedules to depict current status of Work.
C. Identify activities modified since previous submittal, major changes in Work, and other identifiable changes.
D. Upon approval of Change Order, include change in next schedule submittal.
E. Indicate changes required to maintain Date of Substantial Completion.
F. Prepare narrative report to define problem areas, anticipated delays, and impact on schedule. Report corrective action taken or proposed and effect.

1.6 DISTRIBUTION

A. Following joint review, distribute copies to subcontractors, suppliers, Engineer, Owner, and other concerned parties.
B. Instruct recipients to promptly report, in writing, problems anticipated by projections shown in schedules.

PART 2 - PRODUCTS (Not Used)

PART 3 - EXECUTION (Not Used)

END OF SECTION

SECTION 01 33 00 - SUBMITTAL PROCEDURES

PART 1 - GENERAL

1.1 SUMMARY

A. Section Includes:
   1. Submittal procedures.
   2. Resubmittal requirements.
   3. Proposed products list.
   4. Requirements for complete shop drawings.
   5. Product data.
   6. Samples.
   7. Test reports.
   8. Certificates.
   9. Manufacturer instructions.
   10. Manufacturer field reports.

B. Related Requirements:
   1. Other Division 01 Specification Sections apply to Work of this Section.

1.2 SUBMITTAL PROCEDURES

A. Submit to Engineer for review to check for conformance with information given and design concept expressed in Contract Documents.

B. Produce copies and distribute in accordance with this Article.

C. Use Project website to submit record documents as described in Section 01 70 00 "Execution and Closeout Requirements."

D. Transmit each submittal separately with Contractor's standard transmittal letter including Contractor name, address, and phone number. Each Submittal shall contain only one Specification Section.

E. Sequentially number transmittal forms using Section number or Contractor's sequential numbering system.

F. Identify Project, Contractor, subcontractor, or supplier, pertinent Drawing sheet and detail number(s), and Specification Section number appropriate to Submittal.

G. Apply Contractor's stamp, signed or initialed certifying review, verification of products required, field dimensions, adjacent construction Work, and coordination of information, is per requirements of Work and Contract Documents.

H. Schedule Submittals to expedite Project and deliver to Engineer. Coordinate submission of related items.

I. For each Submittal for review, allow 10 working days excluding delivery time to and from Contractor.

J. Identify variations from Contract Documents and product or system limitations detrimental to successful performance of completed Work. Information, comments, field verifications, responses, or other notations marked on Submittals by Contractor shall be in blue or green colors only.

K. Distribute copies of reviewed Submittals to concerned parties. Instruct parties to promptly report any inability to comply with provisions.

L. Unrequested Submittals will not be recognized or processed.

M. Format:
   1. Submit all Submittals digitally using PDF file extension. Each Submittal shall be a single PDF file including transmittal letter. Multiple files for same Submittal will not be accepted.
   2. Submittals in any other format, including ZIP files, will be rejected.
   3. Hard copies, not accepted.
   4. To ensure each page is legible, PDF pages of Drawings shall be same size/scale as hard copy. Where applicable, provide scale symbols to indicate scale. Illegible submittals will be rejected.
   5. Upload Submittals to Project website.

N. Submittal procedures described herein apply to construction progress schedule, products list, Shop Drawings, product data, samples (actual samples and digital files of same), design data, test reports, certificates, manufacturer's instructions and field reports, erection Drawings, RFIs, and other Submittals submitted to Engineer.

1.3 RESUBMITTAL REQUIREMENTS

A. Revise Submittals as required and resubmit to meet requirements specified and noted on submittal reviews.
B. Mark as *Resubmittal*.
C. Reuse original transmittal number and supplement with sequential alphabetical or numeric suffix for each Resubmittal.

1.4 PROPOSED PRODUCTS LIST

A. Within 15 days after date of Notice to Proceed, submit complete list of major products proposed for use, with name of manufacturer, trade name, and model number of each product.
B. For products specified only by reference standards, give manufacturer, trade name, model or catalog designation, and reference standards.

1.5 REQUIREMENTS FOR COMPLETE SHOP DRAWINGS

A. Printable Image Size: Minimum 8.5 by 11 inches, maximum 30 by 42 inches.
B. Draw details to a noted scale.
C. Draw site plans to same scale indicated on Contract Drawings.
D. Engineer-issued Construction Documents (electronic or paper format) cannot be used in any shape, form, or fashion in creating and developing Shop Drawings, except electronic files containing floor, site plans, or layout plans purchased from Engineer may be used as backgrounds for Contractor, subcontractors, sub-subcontractors, and material suppliers in Shop Drawing process.

1.6 PRODUCT DATA

A. Mark each copy to identify applicable products, models, options, and other data. Supplement manufacturers' standard data to provide information unique to Project.
B. Include recommendations for application and use, and reference to compliance with specified standards of trade associations and testing agencies.
C. After review, distribute per Article 1.2 "Submittal Procedures," and provide copies for Record Documents described in Section 01 70 00 "Execution and Closeout Requirements."

1.7 SAMPLES

A. Submit samples to illustrate functional and aesthetic characteristics of product with integral parts and attachment devices. Accompany physical sample with color digital image (photo or scanned PDF) of sample. Coordinate sample Submittals for interfacing work.
B. Unless otherwise specified, submit samples of finishes from manufacturers' full range of standard colors, textures, and patterns, for Engineer selection.
C. Where variations in color, pattern, or texture are inherent in material or product, submit multiple samples to indicate approximate range or variations.
D. Include full Project information and identification of manufacturer, model number, type, style and color on each sample.
E. Submit number of samples specified in individual Specifications, [one] [two] retained by Engineer.
F. Reviewed samples which may remain as part of Work indicated in individual Specifications.
G. Do not use Samples for testing unless specifically stated in individual Specifications.

1.8 TEST REPORTS

A. Submit for Engineer's knowledge as Contract Administrator or Owner.
B. Submit test reports for information to assess conformance with information given and design concept expressed in Contract Documents.

1.9 CERTIFICATES

A. When specified in individual Specifications, submit certification by manufacturer, installation/application subcontractor, or Contractor, to Engineer.
B. Indicate material or product conforms to/exceeds specified requirements. Submit supporting reference data, affidavits, and certifications as appropriate.
C. Certificates may be recent or previous test results on material or product, but must be acceptable to Engineer.

1.10 MANUFACTURER'S INSTRUCTIONS

A. When specified in individual Specifications, submit manufacturer-printed instructions for delivery, storage, assembly, installation, startup, adjusting, and finishing.
B. Identify conflicts between manufacturers' instructions and Contract Documents.
C. Indicate special procedures, conditions requiring special attention and special environmental criteria required for application or installation.

1.11 MANUFACTURER'S FIELD REPORTS

A. Submit reports for Engineer's benefit as contract administrator or for Owner.
B. Submit report within 30 days of observation to Engineer for information.
C. Submit for information to assess conformance with information given and design concept expressed in Contract Documents.

PART 2 - PRODUCTS (Not Used)

PART 3 - EXECUTION (Not Used)

END OF SECTION

SECTION 01 40 00 - QUALITY REQUIREMENTS

PART 1 - GENERAL

1.1 SUMMARY

A. Section Includes:
   1. Quality control.
   2. Tolerances.
   3. References.
   4. Mockup requirements.
   5. Testing and inspection services.
   6. Manufacturer's field services.

B. Related Sections:
   1. Other Division 01 Specification Sections apply to Work of this Section.

1.2 QUALITY CONTROL

A. Monitor quality control over suppliers, manufacturers, products, services, Site conditions, and workmanship, to produce Work of specified quality.

B. Comply with manufacturer's instructions. If manufacturer's instructions conflict with Contract Documents, request clarification from Engineer before proceeding.

C. Perform Work using persons qualified to produce required and specified quality.

D. Products, materials, and equipment may be subject to inspection by Engineer at place of manufacture or fabrication. Such inspections shall not relieve Contractor of complying with requirements of Contract Documents.

E. Supervise performance of Work to ensure Work, whether completed or in progress, will not be subjected to harmful, dangerous, damaging, or otherwise deleterious exposure during construction.

1.3 TOLERANCES

A. Monitor fabrication and installation tolerance control of products to produce acceptable Work. Do not permit tolerances to accumulate.

B. Comply with manufacturer's recommended tolerances and tolerance requirements in reference standards. When tolerances conflict with Contract Documents, request clarification from Engineer before proceeding.

C. Adjust products to appropriate dimensions; position before securing products in place.

1.4 REFERENCES

A. For products or workmanship specified by association, trade, or other consensus standards, comply with requirements of standard except when more rigid requirements are specified or required by applicable codes.

B. Conform to reference standard by date of issue current as of date of Contract Documents except where specific date is established by code.

C. Obtain copies of standards and maintain onsite when required by product Specifications.

D. When requirements of indicated reference standards conflict with Contract Documents, request clarification from Engineer before proceeding.

E. Neither contractual relationships, duties, or responsibilities of parties in Contract, nor those of Engineer shall be altered from Contract Documents by mention or inference in reference documents.

1.5 TESTING AND INSPECTION SERVICES

A. Owner will employ and pay for specified services of an independent firm to perform testing and inspection.

B. Independent firm will perform tests, inspections, and other services specified in individual Specifications and as required by Engineer.

C. Testing, inspections, and source quality control may occur on or off Project Site. Perform off-site testing as required by Engineer.

D. Submit reports to Engineer, indicating observations and results of tests and compliance or noncompliance with Contract Documents.

E. Cooperate with independent firm. Furnish samples of materials, design mix, equipment, tools, storage, safe access, and assistance by incidental labor, as requested.
   1. Notify Engineer and independent firm 24 hours before expected time for operations requiring services.
   2. Pay for additional samples and tests required for Contractor use.

F. Employment of testing agency or laboratory shall not relieve Contractor of obligation to perform Work per requirements of Contract Documents.

G. Retesting or Re-inspection Required Because of Nonconformance with Specified or Indicated Requirements: Payment for retesting or re-inspection will be charged to Contractor by deducting testing charges from Contract Sum/Price.

H. Independent Firm Responsibilities:
   1. Test samples of mixes submitted by Contractor.
   2. Provide qualified personnel at Site. Cooperate with Engineer and Contractor in performance of services.
   3. Perform indicated sampling and testing of products per specified standards.
   4. Ascertain compliance of materials and mixes with Contract Document requirements.
   5. Promptly notify Engineer and Contractor of observed irregularities or nonconformance of Work or products.
   6. Perform additional tests required by Engineer.
   7. Attend preconstruction and progress meetings.

I. Independent Firm Reports. After each test, promptly submit report to Engineer and Contractor and provide interpretation of test results. Include:
   1. Date issued.
   2. Project title and number.
   3. Name of inspector.
   4. Date and time of sampling or inspection.
   5. Identification of product and Specifications.
   6. Location in Project.
   7. Type of inspection or test.
   8. Date of test.
   9. Results of tests.
   10. Conformance with Contract Documents.

1.6 MANUFACTURER'S FIELD SERVICES

A. When specified in individual Specifications, require material or product suppliers or manufacturers to provide qualified staff personnel to observe site conditions, conditions of surfaces and installation, quality of workmanship, equipment startup, testing, adjusting, and balancing equipment, commissioning, and other as applicable, and initiate instructions when necessary.

B. Submit qualifications of observer to Engineer 30 days before required observations. Observer is subject to Engineer approval.

C. Report observations and Site decisions or instructions given to applicators or installers that are supplemental or contrary to manufacturer's written instructions.

D. Refer to Section 01 33 00 "Submittal Procedures," Article 1.11 - Manufacturer's Field Reports.

PART 2 - PRODUCTS (Not Used)

PART 3 - EXECUTION (Not Used)

END OF SECTION

SECTION 01 43 26 - TESTING LABORATORY SERVICES

PART 1 - GENERAL

1.1 SUMMARY

A. Section Includes:
   1. Selection and payment.
   2. Contractor submittals.
   3. Laboratory responsibilities.
   4. Laboratory reports.
   5. Limits on testing laboratory authority.
   6. Contractor responsibilities.
   7. Schedule of inspections and tests.

B. Related Sections:
   1. Other Division 01 Specification Sections apply to Work of this Section.

1.2 REFERENCES

A. ASTM C1077 - Standard Practice for Agencies Testing Concrete and Concrete Aggregates for Use in Construction and Criteria for Testing Agency Evaluation.

B. ASTM D3666 - Standard Specification for Minimum Requirements for Agencies Testing and Inspecting Road and Paving Materials.

C. ASTM D3740 - Standard Practice for Minimum Requirements for Agencies Engaged in Testing/Inspection of Soil and Rock as Used in Engineering Design and Construction.

D. ASTM E329 - Standard Specification for Minimum Requirements for Agencies Engaged in Construction Inspection, Testing, or Special Inspection.

E. ISO/IEC 17025.

1.3 SELECTION AND PAYMENT

A. Contractor shall employ and pay for services of an independent testing laboratory to perform specified inspection and testing.

B. Employment of testing laboratory shall in no way relieve Contractor of obligation to perform work per Contract Document requirements.

1.4 QUALITY ASSURANCE

A. Comply with requirements of ASTM C1077, D3666, D3740, E329, and ISO/IEC 17025.

B. Laboratory: Authorized to operate in State of Texas.

C. Laboratory Staff: Maintain a full-time, on-staff, registered Engineer to review services.

1.5 CONTRACTOR SUBMITTALS

A. Before starting Work, submit testing laboratory name, address, and phone number, as well as names of full-time registered Engineer and responsible officer.

B. Submit copy of laboratory facility inspection report made by Materials Reference Laboratory of National Bureau of Standards during most recent inspection, with remedy memorandum of deficiencies, reported by inspection.

C. Submit Testing Laboratory firm's reports to the distribution list the Engineer provided at preconstruction conference, indicating observations and results of tests and indicating compliance or non-compliance with Contract Documents.
D. Testing and employment of testing agency or laboratory does not relieve Contractor from performing Work to Contract requirements.
E. Retest/reinspect required because of non-conformance to specified requirements using same testing agency or laboratory. Payment for retesting is Contractor responsibility.

1.6 LABORATORY RESPONSIBILITIES

A. Test samples of mixes submitted by Contractor.
B. Provide qualified personnel onsite. Cooperate with Engineer and Contractor in service performance.
C. Perform specified inspection, sampling, and testing of Products per specified standards.
D. Ascertain compliance of materials and mixes with Contract Document requirements.
E. Promptly notify Engineer and Contractor of observed irregularities or non-conformance of Work or Products.
F. Perform additional inspections and tests required by Engineer.
G. Attend pre-construction conferences.

1.7 LABORATORY REPORTS

A. After each inspection and test, promptly distribute reports to distribution list provided by Engineer at preconstruction conference.
B. Include:
    1. Date issued.
    2. Project title and number.
    3. Name of inspector.
    4. Date and time of sampling or inspection.
    5. Identification of product and Specification Section.
    6. Location in Project.
    7. Type of inspection or test.
    8. Date of test.
    9. Results of tests.
    10. Conformance with Contract Documents.
C. When requested by Engineer, provide interpretation of test results.

1.8 LIMITS ON TESTING LABORATORY AUTHORITY

A. Laboratory may not release, revoke, alter, or enlarge Contract Document requirements.
B. Laboratory may not approve or accept any portion of Work.
C. Laboratory may not assume any duties of Contractor.
D. Laboratory has no authority to stop the Work.

1.9 CONTRACTOR RESPONSIBILITIES

A. Deliver to laboratory at designated location, adequate samples of materials proposed to use which require testing along with proposed mix designs.
B. Cooperate with laboratory personnel and provide access to Work and manufacturer facilities.

C. Provide incidental labor and facilities to provide access to Work to test, obtain, and handle samples at site or source of products to test, facilitate tests and inspections, storage, and curing test samples.

D. Notify Engineer and laboratory 24 hours before expected time for operations requiring inspection and testing services.

E. Pay costs of testing laboratory services from Allowance specified in Section 01 20 00 "Price and Payment Procedures" on Engineer approval of invoices.

F. Employ services of a separate qualified testing laboratory, arrange with laboratory, and pay for additional samples and tests required by Contractor beyond specified requirements.

1.10 SCHEDULE OF INSPECTIONS AND TESTS

A. As indicated in individual Specifications.

PART 2 - PRODUCTS (Not Used)

PART 3 - EXECUTION (Not Used)

END OF SECTION

SECTION 01 50 00 - TEMPORARY FACILITIES AND CONTROLS

PART 1 - GENERAL

1.1 SUMMARY

A. Section Includes:
   1. Temporary Utilities:
      a. Electricity.
      b. Lighting.
      c. Heating.
      d. Cooling.
      e. Ventilation.
      f. Communication services.
      g. Water.
      h. Sanitary.
   2. Construction Facilities:
      a. Field offices and sheds.
      b. Employee residential occupancy.
      c. Vehicular access.
      d. Parking.
      e. Progress cleaning.
      f. Project identification.
      g. Traffic regulation.
   3. Temporary Controls:
      a. Barriers.
      b. Fencing.
      c. Enclosures.
      d. Security.
      e. Water control.
      f. Dust control.
      g. Erosion and sediment control.
      h. Noise control.
      i. Pest and rodent control.
      j. Pollution control.
      k. Protect Work.
   4. Remove utilities, facilities, and controls.

B. Related Requirements:
   1. Other Divisions 01 Specification Sections apply to Work of this Section.

1.2 ELECTRICITY

A. Provide and pay for required power service from existing electrical utility source.

1.3 LIGHTING

A. Do not utilize permanent building lighting during construction. Provide and maintain 1-watt-per-square-foot lighting to exterior staging and storage areas after dark for security purposes.
B. Provide and maintain 0.25-watt-per-square-foot HID lighting to interior work areas after dark for security purposes.
C. Provide branch wiring from power source to distribution boxes with lighting conductors, pigtails, and lamps, as required.
D. Maintain lighting and provide routine repairs.

1.4 VENTILATION

A. Ventilate enclosed areas to assist cure of materials, dissipate humidity, and prevent accumulation of dust, fumes, vapors, or gases.
B. Provide temporary fan units required to maintain clean air for construction operations.

1.5 COMMUNICATION SERVICES

A. At minimum, provide cell phone service for onsite superintendent and home office phone service.

1.6 WATER

A. Provide, maintain, and pay for suitable quality water service required for construction operations. Extend branch piping with outlets located so water is available by hoses with threaded connections.

1.7 SANITARY

A. Provide and maintain required facilities and enclosures.
B. Do not use existing facilities.

1.8 FIELD OFFICES AND SHEDS

A. Office
    1. Construction
        a. Portable/mobile building(s) or buildings constructed with floors raised above ground, securely fixed to foundations with steps and landings at entrance doors.
        b. Structurally-sound, secure, weathertight enclosure to maintain environmental conditions specified.
        c. Maintain during progress of Work.
        d. Temperature Transmission Resistance of Floors, Walls, and Ceilings: Compatible with occupancy and storage requirements.
        e. Exterior Materials: Weather resistant.
        f. Interior Materials in Offices: Sheet-type materials for walls and ceilings, prefinished or painted, resilient floors and bases.

2. Lighting: Exterior lighting at entrance doors.
3. Fire Extinguishers: Provide appropriate-type fire extinguisher at each building.
4. Provide separate workstation, similarly equipped and furnished, for Engineer use.
5. Office Heating, Cooling, and Ventilating: Automatic equipment to maintain comfort conditions.

B. Storage Areas and Sheds
1. Size storage per Specifications allowing for access and orderly provision for product maintenance and inspection.
2. Fire Extinguishers: Appropriate-type fire extinguisher at each storage area.
3. Interior Materials in Storage Sheds: As required to provide specified environmental conditions for storage of products.
4. Heating and Ventilation: As required to maintain products per Contract Documents.
5. Lighting: As required for maintenance and inspection of products.

C. Prepare: Fill/grade sites for temporary structures sloped for drainage away from buildings.
D. Install office spaces ready for occupancy 15 days after date fixed in Notice to Proceed.
E. Maintenance and Cleaning:
1. Weekly janitorial services for offices, periodic cleaning and maintenance for office and storage areas.
2. Maintain approach walks free of mud, water, and snow.

F. Removal: At Work completion remove buildings, foundations, utility services, and debris. Restore areas to original conditions.

1.9 EMPLOYEE RESIDENTIAL OCCUPANCY

A. Not allowed on Owner property.

1.10 VEHICULAR ACCESS

A. Construct temporary all-weather access roads from public thoroughfares to serve construction area, width and load-bearing capacity to accommodate unimpeded traffic for construction purposes.
B. Construct temporary bridges and culverts to span low areas and allow unimpeded drainage.
C. Extend and relocate vehicular access as Work progress requires, providing necessary detours for unimpeded traffic flow.
D. Location as indicated on Drawings.
E. Provide unimpeded access for emergency vehicles. Maintain 20-foot-wide driveways with turning space between and around combustible materials.
F. Provide and maintain access to fire hydrants and control valves free of obstructions.
G. Provide means of removing mud from vehicle wheels before entering public streets.
H. Do not use existing onsite roads for construction traffic.
I. Verify with local Authorities Having Jurisdiction regarding temporary fire lanes and related access.

1.11 PARKING

A. Construct temporary gravel-surfaced parking areas to accommodate construction personnel.
B. Locate as approved by Engineer.
C. When Site space is not adequate, provide additional off-site parking.

D. Use of existing on-site streets and driveways for construction traffic is not permitted.
E. Using designated areas of existing parking facilities by construction personnel is not permitted.
F. Do not allow heavy or tracked vehicles or construction equipment in parking areas.
G. Do not allow vehicle parking on existing pavement.
H. Designate one parking space for Engineer.
I. Permanent Pavements And Parking Facilities:
    1. Before Substantial Completion, bases for permanent roads and parking areas may be used for construction traffic.
    2. Avoid traffic loading beyond paving design capacity. Tracked vehicles not allowed.
    3. Use of permanent parking structures not permitted.
J. Maintenance:
    1. Maintain traffic and parking areas in sound condition free of excavated material, construction equipment, products, mud, snow, and ice.
    2. Maintain existing and permanent paved areas used for construction. Promptly repair breaks, potholes, low areas, standing water, and other deficiencies, to maintain paving and drainage in original, or specified, condition.
K. Removal, Repair:
    1. Remove temporary materials and construction at Substantial Completion.
    2. Remove underground work and compacted materials to 2-foot depth. Fill and grade site as specified.
    3. Repair existing facilities damaged by use, to original condition.
L. Mud from Site Vehicles: Provide way to remove mud from wheels before entering streets.

1.12 PROGRESS CLEANING

A. Maintain areas free of waste materials, debris, and rubbish. Maintain a clean and orderly site.
B. Remove debris and rubbish from pipe chases, plenums, attics, crawl spaces, and other closed or remote spaces, before enclosing space.
C. Sweep and vacuum interior areas clean before surface finishing and continue cleaning to eliminate dust.
D. Remove waste materials, debris, and rubbish from site and dispose off-site as required to maintain clean site.

1.13 PROJECT IDENTIFICATION

A. Project Identification Sign
    1. Size: Provide one 8 feet wide by 4 feet high.
    2. Materials: 3/4-inch-thick exterior-grade plywood and solid-wood frame.
    3. Background Paint: Exterior quality, two coats; sign background of olor as selected.
    4. Lettering: Exterior paint of quality adequate to withstand weathering, fading, and chipping for construction duration, contrasting colors as selected with exhibit lettering by professional sign painter.
    5. Lettering: Precut vinyl self-adhesive products, white.
    6. Design: Design indicated in Drawings.

7. Content:
    a. Project title, as indicated on Contract Documents.
    b. Owner's name and logo.
    c. Names and titles of Engineer and consultants.
    d. Name of Prime Contractor.
    e. Name of major subcontractors.
8. Lettering: Series C of Standard Alphabet for Traffic Control Devices *Manual on Uniform Traffic Control Devices for Streets and Highways*, Federal Highway Administration.

B. Project Informational Signs
1. If required by other documents or Specifications, provide weather-protected signs for site-safety procedures, wage rates, and stormwater pollution prevention plan (SWPPP).
2. Erect sign on or adjacent to field office, if required.

C. Design sign and structure to withstand 90-mile-per-hour wind velocity.

D. Installation:
1. Install project identification sign within 15 days after date fixed by Notice to Proceed.
2. Erect at designated location.
3. Erect supports and framing on secure foundation, rigidly braced and framed to resist wind loadings.
4. Install sign surface plumb and level with butt joints. Anchor securely.
5. Paint exposed surfaces of sign supports and framing.

E. No other signs allowed without Owner permission except those required by law.

F. Maintain clean signs and supports. Repair deterioration and damage.

G. Remove signs, framing, supports, and foundations at completion of Project and restore area.

1.14 TRAFFIC REGULATION

A. Contractor Responsibilities
1. Provide Traffic Control Plan (TCP) as necessary for phased construction.
2. TCP must be signed and sealed by a professional engineer licensed in [Texas].
3. Designate a responsible individual for TCP replacement and maintenance.

B. Signs, Signals, And Devices:
1. Post- and Wall-Mounted Traffic Control and Informational Signs: As approved by authority having jurisdiction, Texas Manual on Uniform Traffic Control Devices (TMUTCD), and/or TxDOT Standards shown in Plans.
2. Traffic Control Signals: As approved by local jurisdictions.
3. Traffic Cones and Drums: As approved by authority having jurisdiction.
4. Flares and Lights: As approved by authority having jurisdiction.
5. Flagperson Equipment: As required by authority having jurisdiction.

C. Flagpersons: Provide trained and equipped flagpersons to regulate traffic when construction operations or traffic encroach on public traffic lanes.

D. Flares and Lights: Use during hours of low visibility to delineate traffic lanes and guide traffic.

E. Haul Routes:
   1. Consult with authority having jurisdiction, establish public thoroughfares to use for haul routes and site access.
   2. Drawings indicate haul routes designated by authorities having jurisdiction for use of construction traffic.
   3. Confine construction traffic to designated haul routes.
   4. Provide traffic control at critical areas of haul routes to regulate traffic and minimize interference with public traffic.

F. Traffic Signs And Signals:
   1. Provide signs at approaches to Site and on-site, crossroads, detours, parking areas, and elsewhere as needed to direct construction and affected public traffic.
   2. Provide, operate, and maintain automatic traffic control signals to direct and maintain orderly flow of traffic in areas under Contractor's control and areas affected by Contractor operations.
   3. Relocate as Work progresses to maintain effective traffic control.

G. Removal:
   1. Remove equipment and devices when no longer required.
   2. Repair damage caused by installation.
   3. Remove post settings to 2-foot depth.

1.15 BARRIERS

A. Provide barriers to prevent unauthorized entry to construction areas as well as protect existing facilities and adjacent properties from damage from construction operations. Allow for Owner's use of Site.

B. Provide barricades and covered walkways required by authorities having jurisdiction for:
   1. Public rights-of-way.
   2. Public access to existing building.

C. Replace damaged items condition to original condition and protect items designated to remain:
   1. Trees.
   2. Shrubbery.
   3. Lawns.

D. Protect Site improvements including but not limited to pavements, walkways, and drainage structures from damage. Replace damaged site improvements to original condition.

E. Protect non-owned vehicular traffic and stored materials from damage.

1.16 FENCING

A. Construction: Commercial-grade chain-link fence.

B. Provide 6-foot-high fence around construction site equipped with vehicular and pedestrian gates with locks.

1.17 ENCLOSURES

A. Provide temporary insulated weathertight closure of exterior openings to accommodate acceptable working conditions and protection for products, allow temporary heating, cooling, ventilation, and maintenance of required ambient temperatures identified in individual Specifications, and prevent entry of unauthorized persons. Provide access doors with self-closing hardware and locks.

1.18 SECURITY

A. Security Program:
   1. Protect Work andexisting premises from theft, vandalism, and unauthorized entry.
   2. Initiate program at Project mobilization.
   3. Maintain program throughout construction period until Owner occupancy.
B. Entry Control:
   1. Restrict entrance of persons and vehicles into Project Site.
   2. Allow entrance only to authorized persons with proper identification.
   3. Maintain log of workers and visitors and make available to Owner on request.

1.19 WATER CONTROL

A. Grade site to drain.
B. Maintain excavations free of water.
C. Provide, operate, and maintain pumping equipment.
D. Protect Site from puddling and running water. Provide water barriers required to protect site from soil erosion.
E. Provide water barriers required to protect existing buildings from puddling, ponding, or other water accumulation that may damage foundations or other subsurface construction.

1.20 DUST CONTROL

A. Execute Work to minimize raising dust from construction operations.
B. Provide positive means to prevent airborne dust from dispersing into atmosphere.

1.21 EROSION AND SEDIMENT CONTROL

A. Plan and execute construction to control surface drainage from cuts, fills, borrow, and waste disposal areas. Prevent erosion and sedimentation.
B. Minimize surface area of bare soil exposed at one time.
C. Provide temporary measures including berms, dikes, drains, and other devices to prevent water flow resulting in erosion.
D. Construct fill and waste areas by selective placement to avoid erosive surface silts or clays.
E. Periodically inspect earthwork to detect evidence of erosion and sedimentation. Promptly apply corrective measures.
F. Comply with site Section 01 57 23 "Temporary Stormwater Pollution Control."

1.22 NOISE CONTROL

A. Provide methods, means, and facilities to minimize disruption of Owner operations and activities due to noise produced by construction operations.
B. Conduct activities to produce noise that may interfere with Owner operations and activities only when agreed to by Owner.

1.23 PEST AND RODENT CONTROL

A. Provide methods, means, and facilities to prevent the following from damaging Work:
   1. Pests.
   2. Insects.
   3. Rodents.

1.24 POLLUTION CONTROL

A. Provide methods, means, and facilities to prevent contamination of soil, water, and atmosphere from discharge of noxious, toxic substances, and pollutants produced by construction operations.
B. Comply with pollution and environmental control requirements of authorities having jurisdiction.

1.25 PROTECT WORK

A. Protect installed Work and provide special protection where specified in Specifications.
B. Provide temporary and removable protection for installed Products. Control activity in immediate work area to minimize damage.
C. Provide protective coverings at openings in walls, roof, and soffits.
D. Protect finished walkways, drives, and other surfaces from traffic, dirt, wear, damage, or movement of heavy objects, by protecting with durable sheet materials.
E. Prohibit traffic or storage upon waterproofed or roofed surfaces. If traffic/activity necessary, obtain recommendations for protection from waterproofing or roofing material manufacturer.
F. Prohibit traffic from landscaped areas.

1.26 REMOVE UTILITIES, FACILITIES, AND CONTROLS

A. Remove temporary above-grade utilities, equipment, facilities, and materials as soon as permanent facilities can be utilized.
B. Remove risers for underground utilities to minimum 2-foot depth and cap.
C. Remove buried equipment, facilities, and materials completely to minimum 2-foot depth and cap.
D. Backfill excavations as specified in other sections and grade site as indicated.
E. Clean and repair damage caused by installation or temporary Work.
F. Restore existing facilities used during construction to original condition. Restore permanent facilities used during construction to specified condition.
G. Remove when no longer needed:
   1. Office.
   2. Storage sheds.

PART 2 - PRODUCTS (Not Used)

PART 3 - EXECUTION (Not Used)

END OF SECTION

SECTION 01 57 23 - TEMPORARY STORMWATER POLLUTION CONTROL

PART 1 - GENERAL

1.1 SUMMARY

A. Section Includes:
   1. Contractor responsibilities.
   2. Submittals.
   3. Erosion and sediment controls.

B. Related Requirements:
   1. Local jurisdiction requirements.
   2. Division 01 Specification Sections apply to Work of this Section.

1.2 CONTRACTOR RESPONSIBILITIES

A. Contractor is solely responsible for meeting all TCEQ and EPA requirements for stormwater pollution prevention:
   1. Develop a Stormwater Pollution Prevention Plan (SWPPP) if not provided;
   2. File Notice of Intent (NOI) and include Owner as an "Operator;"
   3. Install and maintain all erosion control measures and best management practices (BMPs);
   4. Perform inspections and prepare reports; and
   5. File Notice of Termination (NOT).

1.3 SUBMITTALS

A. Submit to Engineer, SWPPP, Submittal Procedures, and all other related documentation conforming to Section 01 33 00 "Submittal Procedures."

1.4 EROSION AND SEDIMENT CONTROLS

A. Implement structural measures to divert flows from exposed soils, temporarily store flows, or otherwise limit run-off and discharge of pollutants from exposed areas of site. Timely implement structural practices as specified in SWPPP during construction to minimize erosion and sediment run-off.

B. Stabilized Ingress/Egress:
   1. Provide stabilized access to/from construction site as soon as practical per SWPPP.
   2. Ensure any soil tracked off-site is cleaned from existing roads, alleys, and any adjacent properties as soon as possible. Check for any pollutants (mud, silt, sand, cement, construction materials, etc.) tracked or washed off-site and perform necessary clean-up measures at the end of each work day.

C. Silt Fences/Diversion Berms: Provide as a temporary structural practice to minimize erosion and sediment runoff, as necessary. Properly install silt fences and/or diversion berms to effectively retain sediment immediately after completing each phase of Work where erosion would occur as sheet and rill erosion (clearing and grubbing, excavation, embankment, grading, etc.).

D. Sand/Gravel Bags: Provide as a temporary structural practice to minimize erosion and sediment runoff. Properly place bags to effectively retain sediment immediately after completing each phase of Work (clearing and grubbing, excavation, embankment, grading, etc.) in each independent runoff area (after clearing and grubbing between ridge and drain, place bags as Work progresses, remove/replace/relocate bags as needed for Work to progress in drainage area). Replace sand/gravel bags no longer in good condition, as needed.

E. Site Stabilization:
   1. Minimize surface area of base soil material at one time.
   2. Implement necessary stabilization measures including:
      a. Temporary/permanent seeding/sodding;
      b. Mulching;
      c. Geotextiles;
      d. Vegetative buffer strips;
      e. Paving;
      f. Rock riprap; and/or
      g. Rock-filled gabions.
      h. Inlet protection.
   3. Implement stabilization measures per SWPPP.

PART 2 - PRODUCTS (Not Used)

PART 3 - EXECUTION (Not Used)

END OF SECTION

SECTION 01 60 00 - PRODUCT REQUIREMENTS

PART 1 - GENERAL

1.1 SUMMARY

A. Section Includes:
   1. Products.
   2. Product delivery requirements.
   3. Product storage and handling requirements.

B. Related Sections:
   1. Other Division 01 Specification Sections apply to Work of this Section.

1.2 PRODUCTS

A. At minimum, comply with specified requirements and reference standards.

B. Specified products define standard of quality, type, function, dimension, appearance, and performance required.

C. Furnish products of qualified manufacturers suitable for intended use. Furnish products of each type by single manufacturer unless specified otherwise. Confirm manufacturer production capacity can provide sufficient product, on time, to meet Project requirements.

1.3 PRODUCT DELIVERY REQUIREMENTS

A. Transport and handle products per manufacturer instructions.

B. Promptly inspect shipments to ensure products comply with requirements, quantities are correct, and products are undamaged.

C. Provide equipment and personnel to handle products. Prevent soiling, disfigurement, or damage.

D. Owner will not assist in offloading or accepting product deliveries.

1.4 PRODUCT STORAGE AND HANDLING REQUIREMENTS

A. Store and protect products per manufacturer instructions.

B. Store products with seals and labels intact and legible.

C. Store sensitive products in weathertight, climate-controlled enclosures in an environment suitable to product.

D. For exterior storage of fabricated products, place products on sloped supports above ground.

E. Cover products subject to deterioration with impervious sheet covering. Provide ventilation to prevent condensation and degradation of products.

F. Store loose granular materials on solid flat surfaces in well-drained area. Prevent mixing with foreign matter.

G. Provide equipment and personnel to store products. Prevent soiling, disfigurement, or damage.

H. Arrange product storage to permit access for inspection. Periodically inspect to verify products are undamaged and maintained in acceptable condition.

PART 2 - PRODUCTS (Not Used)

PART 3 - EXECUTION (Not Used)

END OF SECTION

SECTION 01 70 00 - EXECUTION AND CLOSEOUT REQUIREMENTS

PART 1 - GENERAL

1.1 SUMMARY

A. Section Includes:

1. Surveying.
2. Closeout procedures.
3. Starting systems.
4. Demonstration and instructions.
5. Testing, adjusting, and balancing.
6. Project record documents.
7. Operation and maintenance data.
8. Manual for materials and finishes.
9. Manual for equipment and systems.
10. Spare parts and maintenance products.
11. Product warranties and product bonds.
12. Examination.
13. Preparation.
14. Execution.
15. Protecting installed construction.
16. Final cleaning.

B. Related Sections:

1. Other Division 01 Specification Sections apply to Work of this Section.

1.2 SURVEYING

A. Employ land surveyor registered in State of Texas and acceptable to Engineer.

B. Locate and protect survey control and reference points. Promptly notify Engineer of discrepancies discovered.

C. Control datum for survey is indicated on Drawings.

D. Verify setbacks, easements, and rights of way. Confirm Drawing dimensions and elevations.

E. Provide field engineering services. Establish elevations, lines, and levels using recognized engineering survey practices.

F. Submit copy of Site Drawing signed by land surveyor certifying elevations and locations of Work are per Contract Documents.

G. Maintain complete and accurate log of control and survey Work as Work progresses.

H. Protect survey control points before starting Site Work. Preserve permanent reference points during construction.

I. Promptly report to Engineer loss or destruction of reference point or relocation required because of changes in grades or other reasons.

J. Replace dislocated survey control points based on original survey control. Make no changes without prior written notice to Engineer.

1.3 CLOSEOUT PROCEDURES

A. Prerequisites to Substantial Completion. Complete following items before requesting Certification of Substantial Completion either for entire Work or portions of Work:
   1. Submit maintenance manuals, Project Record Documents, and other similar final record data per this Section.
   2. Complete facility startup, testing, adjusting, balancing systems and equipment, demonstrations, and instructions to Owner's operating and maintenance personnel as specified per this Section.
   3. Conduct inspection to establish basis for request that Work is substantially complete. Create comprehensive list (initial punch list) indicating items to complete or correct, value of incomplete or nonconforming Work, reason for incompletion, and date of anticipated completion for each item. Include copy of list with request for Certificate of Substantial Completion.
   4. Obtain and submit releases enabling Owner's full, unrestricted use of Project and access to services and utilities. Include certificate of occupancy, operating certificates, and similar releases from authorities having jurisdiction and utility companies.
   5. Deliver tools, spare parts, extra stocks of material, and similar physical items to Owner.
   6. Change locks and transmit keys directly to Owner. Advise Owner's personnel of change-over in security provisions.
   7. Discontinue or change over and remove temporary facilities and services from Project Site along with construction tools, mockups, and similar elements.
   8. Perform final cleaning per this Section.

B. Substantial Completion Inspection:
   1. When Contractor considers Work substantially complete, submit to Engineer and Owner:
      a. Written certificate that Work, or designated portion, is substantially complete.
      b. List of items to complete or correct (initial punch list).
   2. Within 7 days after receipt of request for Substantial Completion, Engineer and Owner will inspect to determine if Work or designated portion is substantially complete.
   3. If Engineer and Owner determine Work is NOT substantially complete:
      a. Engineer and Owner will promptly notify Contractor, in writing, stating reasons for opinion.
      b. Contractor shall remedy deficiencies in Work and send second written request for Substantial Completion to Engineer and Owner.
      c. Engineer and Owner will reinspect Work.
      d. Repeat until Work passes inspection.
   4. When Engineer and Owner finds Work is substantially complete, they will:
      a. Prepare Certificate of Substantial Completion on EJCDC C-625, Certificate of Substantial Completion, accompanied by Contractor's list of items to complete or correct as verified and amended by Engineer and Owner (final punch list).
      b. Submit Certificate to Owner and Contractor for written acceptance of responsibilities assigned in Certificate.
   5. After Work is substantially complete:
      a. Allow Owner occupancy of Project under provisions stated in Certificate of Substantial Completion.

b. Complete Work listed for completion or correction within time stipulated.

C. Prerequisites for Final Completion. Complete following items before requesting final acceptance and final payment:
   1. When Contractor considers Work complete, submit written certification that:
      a. Contract Documents were reviewed.
      b. Work was examined for compliance with Contract Documents.
      c. Work was completed per Contract Documents.
      d. Work is complete and ready for final inspection.
   2. Submit:
      a. Final punch list indicating all items are complete or correct.
      b. Final payment request with final releases and supporting documentation not previously submitted and accepted. Include certificates of insurance for products and completed operations, where required.
      c. Specified warranties, workmanship/maintenance bonds, maintenance agreements, and other similar documents.
      d. Accounting statement for final changes to Contract Sum.
      e. Contractor's Affidavit of Payment of Debts and Claims on Contractor form.
      f. Contractor Affidavit of Release of Liens on Contractor form.
      g. Consent of Surety to Final Payment on Contractor form.
   3. Perform final cleaning for Contractor-soiled areas per this Section.

D. Final Completion Inspection:
   1. Within 7 days after receipt of request for final inspection, Engineer and Owner will inspect to determine if Work or designated portion is complete.
   2. If Engineer and Owner consider Work incomplete or defective:
      a. Engineer and Owner will promptly notify Contractor, in writing, listing incomplete or defective Work.
      b. Contractor shall remedy stated deficiencies and send second written request to Engineer and Owner that Work is complete.
      c. Engineer and Owner will reinspect Work.
      d. Redo and Inspect Deficient Work: Repeated until Work passes inspection.
      e. Engineer and Owner inspection.

1.4 STARTING SYSTEMS

A. Coordinate schedule for startup of various equipment and systems.
B. Notify Engineer 7 days before startup of each item.
C. Verify each piece of equipment or system was checked for proper lubrication, drive rotation, belt tension, control sequence, and conditions which may cause damage.
D. Verify tests, meter readings, and electrical characteristics agree with those required by equipment or system manufacturer.
E. Verify wiring and support components for equipment are complete and tested.
F. Execute startup under supervision of manufacturer representative or Contractor personnel per manufacturer's instructions.
G. When specified in individual Specifications, require manufacturer to provide authorized representative who will be present at Site to inspect, check, and approve equipment or system installation before startup and supervise placing equipment or system in operation.
H. Submit a written report per Section 01 33 00 "Submittal Procedures," that equipment or system has properly installed and functioning correctly.

1.5 DEMONSTRATION AND INSTRUCTIONS

A. Demonstrate operation and maintenance (O&M) of products to Owner personnel 2 weeks before date of Substantial Completion.
B. Demonstrate Project equipment by manufacturer's representative who is knowledgeable about Project.
C. Use O&M manuals as basis for instruction. Review contents of manual with Owner personnel in detail to explain all aspects of operation and maintenance.
D. Demonstrate startup, operation, control, adjustment, troubleshooting, servicing, maintenance, and shutdown of each item of equipment at agreed time, at equipment location.
E. Prepare and insert additional data in O&M manuals when need for additional data is apparent during instruction.
F. Required instruction time for each item of equipment and system is specified in individual Specifications.

1.6 TESTING, ADJUSTING, AND BALANCING

A. Owner will appoint and employ services of independent firm to perform testing, adjusting, and balancing. Contractor shall pay for services from cash allowance specified in Section 01 20 00 "Price and Payment Procedures."
B. Reports will be submitted by independent firm to Engineer indicating observations and results of tests and indicating compliance or noncompliance with requirements of Contract Documents.

1.7 PROJECT RECORD DOCUMENTS

A. Maintain onsite, 1 set of these record documents and record actual revisions to Work:
   1. Drawings.
   2. Specifications.
   3. Addenda.
   4. Change Orders and other modifications to Contract.
   5. Reviewed Shop Drawings, product data, and Samples.
   6. Manufacturer's instruction for assembly, installation, and adjusting.
B. Ensure entries are complete and accurate enabling future reference by Owner.
C. Store record documents separate from documents used for construction.
D. Record information concurrent with construction progress not less than weekly.
E. Specifications: Legibly mark and record, at each product Section, description of actual products installed including:
   1. Manufacturer name, product model, and number.
   2. Product substitutions or alternates used.
   3. Changes made by Addenda and modifications.
F. Record Drawings. Legibly mark each item to record actual construction.
   1. Include Contract modifications such as Addenda, supplementary instructions, change directives, field orders, minor changes in Work, and change orders.
   2. Include locations of concealed elements of Work.
   3. Identify depth of buried utility lines and provide dimensions showing distances from permanent facility components parallel to utilities.
   4. Dimension ends, corners, and junctions of buried utilities to permanent facility components using triangulation.

5. Identify and locate existing buried or concealed items encountered during Project.
6. Measured depths of foundations in relation to finish floor datum.
7. Measured horizontal and vertical locations of underground utilities and appurtenances referenced to permanent surface improvements.
8. Measured locations of internal utilities and appurtenances concealed in construction, referenced to visible and accessible features of Work.
9. Field changes of dimension and detail.
10. Details not on original Drawings.

G. Submit marked-up paper copy documents to Engineer with claim for final Application for Payment.

H. Submit PDF electronic files of marked-up documents to Engineer with claim for final Application for Payment.

1.8 OPERATION AND MAINTENANCE DATA

A. Submit in PDF composite electronic indexed file.

B. Submit data bound in 8-1/2- by 11-inch text pages, 3 D-side-ring binders with durable plastic covers.

C. Prepare binder cover with printed *Operation and Maintenance Instructions*, title of Project, and subject matter of binder when multiple binders required.

D. Internally subdivide binder contents with permanent page dividers, logically organized as described, with tab titling clearly printed under reinforced laminated plastic tabs.

E. Drawings: Provide with reinforced punched binder tab. Bind in with text. Fold larger Drawings to size of text pages.

F. Contents: Prepare Table of Contents (TOC) for each volume, with each product or system description identified, typed on white paper, in three parts as:

1. Part 1: Directory, listing names, addresses, and phone numbers of Engineer, Contractor, subcontractors, and major equipment suppliers.
2. Part 2: O&M instructions, arranged by system and subdivided by Specification Section. For each category, identify names, addresses, and phone numbers of subcontractors and suppliers. Include:
   a. Significant design criteria.
   b. List of equipment.
   c. Parts list for each component.
   d. Operating instructions.
   e. Maintenance instructions for equipment and systems.
   f. Maintenance instructions for finishes including recommended cleaning methods and materials, and special precautions identifying detrimental agents.
   g. Safety precautions to take when operating and maintaining or working near equipment.
3. Part 3: Project documents and certificates, including:
   a. Shop Drawings and product data.
   b. Certificates.
   c. Originals of warranties.

1.9 MANUAL FOR MATERIALS AND FINISHES

A. Submit 2 copies of preliminary draft or proposed formats and outlines of contents before start of Work. Engineer will review draft and return 1 copy with comments.

B. For equipment or component parts of equipment put into service during construction and operated by Owner, submit documents within 10 days after acceptance.

C. Submit one copy of completed volumes 15 days before final inspection. Draft copy reviewed and returned after final inspection, with Engineer comments. Revise content of document sets as required before final submission.
D. Submit two sets of revised final volumes within 10 days after final inspection.
E. Submit in PDF composite electronic indexed file of final manual within 10 days after final inspection.
F. Building Products, Applied Materials, and Finishes: Include product data with catalog number, size, composition, and color and texture designations. Include information for reordering custom-manufactured products.
G. Instructions for Care and Maintenance: Include manufacturer recommendations for cleaning agents and methods, precautions against detrimental agents and methods, and recommended schedule for cleaning and maintenance.
H. Moisture Protection and Weather-Exposed Products: Include product data listing applicable reference standards, chemical composition, and details of installation. Include recommendations for inspections, maintenance, and repair.
I. Additional requirements as specified in individual product Specifications.
J. Include listing in TOC for design data with tabbed fly sheet and space for insertion of data.

1.10 MANUAL FOR EQUIPMENT AND SYSTEMS

A. Submit two copies of preliminary draft or proposed formats and outlines of contents before Work. Engineer will review draft and return one copy with comments.
B. For equipment or component parts of equipment put into service during construction and operated by Owner, submit documents within 10 days after acceptance.
C. Submit one copy of completed volumes 15 days before final inspection. Draft copy will be reviewed and returned after final inspection with Engineer comments. Revise content of document sets as required before final submission.
D. Submit two sets of revised final volumes within 10 days after final inspection.
E. Submit in PDF composite electronic indexed file of final manual within 10 days after final inspection.
F. Each System and Item of Equipment: Include description of unit/system and component parts. Identify function, normal operating characteristics, and limiting conditions. Include performance curves with engineering data and tests, complete nomenclature, and model number of replaceable parts.
G. Panelboard Circuit Directories: Provide electrical service characteristics, controls, and communications by label machine.
H. Include color-coded wiring diagrams as installed.
I. Operating Procedures: Include startup, break-in, and routine normal operating instructions and sequences. Include regulation, control, stopping, shutdown, and emergency instructions. Include summer, winter, and special operating instructions.
J. Maintenance Requirements: Include routine procedures and guide for preventative maintenance and troubleshooting; disassembly, repair, and reassembly instructions; and alignment, adjusting, balancing, and checking instructions.
K. Include servicing and lubrication schedule and list of lubricants required.
L. Include manufacturer-printed operation and maintenance instructions.
M. Include sequence of operation by controls manufacturer.
N. Include original manufacturer parts list, illustrations, assembly drawings, and diagrams required for maintenance.
O. Include control diagrams by controls manufacturer as installed.
P. Include Contractor coordination Drawings with color-coded piping diagrams as installed.

Q. Include charts of valve tag numbers, with location and function of each valve, keyed to flow and control diagrams.
R. Include list of original manufacturer's spare parts, current prices, and recommended quantities maintained in storage.
S. Include test and balancing reports per Section 01 40 00 "Quality Requirements."
T. Additional requirements as specified in individual product Specifications.
U. Include listing in TOC for design data with tabbed dividers and space for insertion of data.

1.11 SPARE PARTS AND MAINTENANCE PRODUCTS

A. Furnish spare parts, maintenance, and extra products in quantities specified in individual Specifications.
B. Deliver to place in location as directed by Owner. Obtain receipt before final payment.

1.12 PRODUCT WARRANTIES AND PRODUCT BONDS

A. Obtain warranties and bonds executed by responsible subcontractors, suppliers, and manufacturers within 10 days after completion of applicable item of Work.
B. Execute and assemble transferable warranty documents and bonds from subcontractors, suppliers, and manufacturers.
C. Verify documents are in proper form, contain full information, and are notarized.
D. Co-execute submittals when required.
E. Include TOC and assemble in three D-side-ring binders with durable plastic cover.
F. Submit before final Application for Payment.
G. Time of Submittals:
    1. For equipment or component parts of equipment put into service during construction with Owner permission, submit documents within 10 days after acceptance.
    2. Make other submittals within 10 days after date of Substantial Completion before final Application for Payment.
    3. For items of Work for which acceptance is delayed beyond Substantial Completion, submit within 10 days after acceptance listing date of acceptance as beginning of warranty or bond period.

PART 2 - PRODUCTS (Not Used)

PART 3 - EXECUTION

3.1 EXAMINATION

A. Verify existing Site conditions and substrate surfaces are acceptable for subsequent Work.
B. Beginning new Work means acceptance of existing conditions.
C. Verify existing substrate can structurally support or attach new Work applied.
D. Examine and verify specific conditions described in individual Specifications.
E. Verify utility services are available with correct characteristics and in correct locations.

3.2 PREPARATION

A. Clean substrate surfaces before applying next material or substance per manufacturer instructions.
B. Seal cracks or openings of substrate before applying next material or substance.
C. Apply manufacturer-required or -recommended substrate primer, sealer, or conditioner before applying new material or substance in contact or bond.

3.3 EXECUTION

A. Comply with manufacturer installation instructions performing each step in sequence. Maintain one set of manufacturer installation instructions at Project Site during installation and until completion of construction.
B. When manufacturer installation instructions conflict with Contract Documents, request clarification from Engineer before proceeding.
C. Verify field measurements are as indicated on approved Shop Drawings or as instructed by manufacturer.
D. Secure products in place with positive anchorage devices designed and sized to withstand stresses, vibration, physical distortion, or disfigurement.
    1. Secure Work true-to-line and level and within specified tolerances, or if not specified, industry-recognized tolerances.
    2. Physically separate products in place, provide electrical insulation, or provide protective coatings to prevent galvanic action or corrosion between dissimilar metals.
    3. Exposed Joints: Provide uniform joint width and arrange to obtain best visual effect. Refer questionable visual-effect choices to Engineer for final decision.
E. Allow for expansion of materials and building movement.
F. Climatic Conditions and Project Status: Install each unit of Work under conditions to ensure best possible results in coordination with entire Project.
    1. Isolate each unit of Work from incompatible Work necessary to prevent deterioration.
    2. Coordinate enclosure of Work with required inspections and tests to minimize necessity of uncovering Work for those purposes.
G. Mounting Heights: Where not indicated, mount individual units of Work at industry-recognized standard mounting heights for particular application indicated.
    1. Refer questionable mounting heights choices to Engineer for final decision.
    2. Elements Identified as Accessible to Handicapped: Comply with applicable codes and regulations.
H. Adjust operating products and equipment to ensure smooth and unhindered operation.
I. Clean and perform maintenance on installed Work as frequently as necessary through remainder of construction. Lubricate operable components recommended by manufacturer.

3.4 PROTECTING INSTALLED CONSTRUCTION

A. Protect installed Work and provide special protection where specified.
B. Provide temporary and removable protection for installed products. Control activity in immediate Work area to prevent damage.
C. Provide protective coverings at walls, projections, jambs, sills, and soffits of openings.
D. Use durable sheet materials to protect finished floors, stairs, and other surfaces from traffic, dirt, wear, damage, or movement of heavy objects.

E. Prohibit traffic or storage upon waterproofed or roofed surfaces. When traffic or activity necessary, obtain recommendations for protection from waterproofing or roofing material manufacturer.
F. Prohibit traffic from landscaped areas.

3.5 FINAL CLEANING

A. Execute final cleaning before final Project assessment. Employ experienced personnel or professional cleaning firm.
B. Clean interior and exterior glass and surfaces exposed to view. Remove temporary labels, stains, and foreign substances. Polish transparent and glossy surfaces and vacuum carpeted and soft surfaces.
C. Clean equipment and fixtures to sanitary condition with appropriate cleaning materials.
D. Clean filters of operating equipment.
E. Clean debris from roofs, gutters, downspouts, and drainage systems.
F. Clean site. Sweep paved areas and rake landscaped surfaces clean.
G. Remove waste and surplus materials, rubbish, and construction facilities from site.

END OF SECTION

SECTION 03 10 00 - CONCRETE FORMING AND ACCESSORIES

PART 1 - GENERAL

1.1 SUMMARY

A. Section Includes:
   1. Form-facing material for cast-in-place concrete.
   2. Shoring, bracing, and anchoring.

B. Related Requirements:
   1. Division 01 Specification Sections apply to Work of this Section.
   2. Section 32 13 13 "Concrete Paving" for formwork related to concrete pavement and walks.

1.2 DEFINITIONS

A. Form-Facing Material: Temporary structure or mold for the support of concrete while the concrete is setting and gaining sufficient strength to be self-supporting.

B. Formwork: The total system of support of freshly placed concrete including the mold or sheathing that contacts the concrete as well as supporting members, hardware, and necessary bracing.

1.3 PREINSTALLATION MEETINGS

A. Preinstallation Conference: Conduct conference at Project site.
   1. Review the following:
      a. Special inspection and testing and inspecting agency procedures for field quality control.
      b. Construction, movement, contraction, and isolation joints
      c. Forms and form-removal limitations.
      d. Anchor rod and anchorage device installation tolerances.

1.4 ACTION SUBMITTALS

A. Product Data: For each of the following:
   1. Exposed surface form-facing material.
   2. Concealed surface form-facing material.
   3. Form ties.
   4. Form-release agent.

1.5 INFORMATIONAL SUBMITTALS

A. Qualification Data: For testing and inspection agency.

B. Field quality-control reports.

C. Minutes of preinstallation conference.

PART 2 - PRODUCTS

2.1 PERFORMANCE REQUIREMENTS

A. Concrete Formwork: Design, engineer, erect, shore, brace, and maintain formwork, shores, and reshores in accordance with ACI 301 to support vertical, lateral, static, and dynamic loads, and construction loads that might be applied, until structure can support such loads so that resulting concrete conforms to the required shapes, lines, and dimensions.
   1. Design wood panel forms in accordance with APA's "Concrete Forming Design/Construction Guide."
   2. Design formwork to limit deflection of form-facing material to 1/240 of center-to-center spacing of supports.

2.2 FORM-FACING MATERIALS

A. As-Cast Surface Form-Facing Material:
   1. Provide continuous, true, and smooth concrete surfaces.
   2. Furnish in largest practicable sizes to minimize number of joints.
   3. Acceptable Materials: As required to comply with Surface Finish designations specified in Section 03 30 00 "Cast-In-Place Concrete" and as follows:
      a. Plywood, metal, or other approved panel materials.
      b. Exterior-grade plywood panels, suitable for concrete forms, complying with DOC PS 1 and as follows:
         1) APA Structural 1 Plyform, B-B or better; mill oiled and edge sealed.

B. Concealed Surface Form-Facing Material: Lumber, plywood, metal, plastic, or another approved material.
   1. Provide lumber dressed on at least 2 edges and 1 side for tight fit.

2.3 RELATED MATERIALS

A. Chamfer Strips: Wood, metal, PVC, or rubber strips, 3/4-inch by 3/4-inch, minimum.

B. Form-Release Agent: Commercially formulated form-release agent that does not bond with, stain, or adversely affect concrete surfaces and does not impair subsequent treatments of concrete surfaces.
   1. Formulate form-release agent with rust inhibitor for steel form-facing materials.
   2. Form release agent for form liners shall be acceptable to form liner manufacturer.

C. Form Ties: Factory-fabricated, removable or snap-off, glass-fiber-reinforced plastic, or metal form ties designed to resist lateral pressure of fresh concrete on forms and to prevent spalling of concrete on removal.
   1. Furnish ties that, when removed, leave holes no larger than 1 inch in diameter in concrete surface.

PART 3 - EXECUTION

3.1 INSTALLATION OF FORMWORK

A. Comply with ACI 301.

B. Construct formwork so concrete members and structures are of size, shape, alignment, elevation, and position indicated within tolerance limits of ACI 117, and to comply with the Surface Finish designations specified in Section 03 30 00 "Cast-In-Place Concrete" for as-cast finishes.

C. Limit concrete surface irregularities as follows:
   1. Surface Finish-2.0: ACI 117 Class B, 1/4-inch.

D. Construct forms tight enough to prevent loss of concrete mortar.
   1. Minimize joints.
   2. Exposed Concrete: Symmetrically align joints in forms.

E. Construct removable forms for easy removal without hammering or prying against concrete surfaces.
   1. Provide crush or wrecking plates where stripping may damage cast-concrete surfaces.
   2. Provide top forms for inclined surfaces steeper than 1.5 horizontal to 1 vertical.
   3. Install keyways, reglets, recesses, and other accessories for easy removal.

F. Do not use rust-stained, steel, form-facing material.

G. Set edge forms, bulkheads, and intermediate screed strips for slabs to achieve required elevations and slopes in finished concrete surfaces.
   1. Provide and secure units to support screed strips
   2. Use strike-off templates or compacting-type screeds.

H. Provide temporary openings for cleanouts and inspection ports where interior area of formwork is inaccessible.
   1. Close openings with panels tightly fitted to forms and securely braced to prevent loss of concrete mortar.
   2. Locate temporary openings in forms at inconspicuous locations.

I. Chamfer exterior corners and edges of permanently exposed concrete.

J. At construction joints, overlap forms onto previously placed concrete not less than 12 inches.

K. Form openings, chases, offsets, sinkages, keyways, reglets, blocking, screeds, and bulkheads required in the Work.
   1. Determine sizes and locations from trades providing such items.
   2. Obtain written approval of Architect prior to forming openings not indicated on Drawings.

L. Construction and Movement Joints:
   1. Construct joints true to line with faces perpendicular to surface plane of concrete.
   2. Install so strength and appearance of concrete are not impaired at locations indicated or as approved by Architect.
   3. Place joints perpendicular to main reinforcement.
   4. Locate joints for beams, slabs, joists, and girders in the middle third of spans.
      a. Offset joints in girders a minimum distance of twice the beam width from a beam-girder intersection.
   5. Locate horizontal joints in walls and columns at underside of floors, slabs, beams, and girders and at the top of footings or floor slabs.
   6. Space vertical joints in walls as indicated on Drawings.
      a. Locate joints beside piers integral with walls, near corners, and in concealed locations where possible.

M. Provide temporary ports or openings in formwork where required to facilitate cleaning and inspection.
   1. Locate ports and openings in bottom of vertical forms, in inconspicuous location, to allow flushing water to drain.
   2. Close temporary ports and openings with tight-fitting panels, flush with inside face of form, and neatly fitted so joints will not be apparent in exposed concrete surfaces.

N. Clean forms and adjacent surfaces to receive concrete. Remove chips, wood, sawdust, dirt, and other debris just before placing concrete.

O. Retighten forms and bracing before placing concrete, as required, to prevent mortar leaks and maintain proper alignment.

P. Coat contact surfaces of forms with form-release agent, according to manufacturer's written instructions, before placing reinforcement.

3.2 INSTALLATION OF EMBEDDED ITEMS

A. Place and secure anchorage devices and other embedded items required for adjoining Work that is attached to or supported by cast-in-place concrete.
   1. Use setting Drawings, templates, diagrams, instructions, and directions furnished with items to be embedded.
   2. Install anchor rods, accurately located, to elevations required and complying with tolerances in Section 7.5 of AISC 303.
   3. Clean embedded items immediately prior to concrete placement.

3.3 REMOVING AND REUSING FORMS

A. Formwork for sides of beams, walls, columns, and similar parts of the Work that does not support weight of concrete may be removed after cumulatively curing at not less than 50 degrees F for 24 hours after placing concrete. Concrete has to be hard enough to not be damaged by form-removal operations, and curing and protection operations need to be maintained.

B. Clean and repair surfaces of forms to be reused in the Work.
   1. Split, frayed, delaminated, or otherwise damaged form-facing material are unacceptable for exposed surfaces.
   2. Apply new form-release agent.

C. When forms are reused, clean surfaces, remove fins and laitance, and tighten to close joints.
   1. Align and secure joints to avoid offsets.
   2. Do not use patched forms for exposed concrete surfaces unless approved by Architect.

3.4 FIELD QUALITY CONTROL

A. Special Inspections: Owner will engage a special inspector and qualified testing and inspecting agenc to perform field tests and inspections and prepare test reports.

B. Inspections:
   1. Inspect formwork for shape, location, and dimensions of the concrete member being formed.

END OF SECTION

SECTION 03 20 00 - CONCRETE REINFORCING

PART 1 - GENERAL

1.1 SUMMARY

A. Section Includes:
   1. Steel reinforcement bars.
B. Related Requirements:
   1. Division 01 Specification Sections apply to Work of this Section.

1.2 PREINSTALLATION MEETINGS

A. Preinstallation Conference: Conduct conference at Project site.
   1. Review the following:
      a. Special inspection and testing and inspecting agency procedures for field quality control.
      b. Construction contraction and isolation joints.
      c. Steel-reinforcement installation.

1.3 ACTION SUBMITTALS

A. Product Data: For the following:
   1. Each type of steel reinforcement.
   2. Bar supports.
   3. Mechanical splice couplers.
B. Sustainable Design Submittals.
C. Shop Drawings: Comply with ACI SP-066:
   1. Include placing Drawings that detail fabrication, bending, and placement.
   2. Include bar sizes, lengths, materials, grades, bar schedules, stirrup spacing, bent bar diagrams, bar arrangement, location of splices, lengths of lap splices, details of mechanical splice couplers, tie spacing, and supports for concrete reinforcement.
D. Construction Joint Layout: Indicate proposed construction joints required to build the structure.
   1. Location of construction joints is subject to approval of the Architect.

1.4 INFORMATIONAL SUBMITTALS

A. Qualification Statements: For testing and inspection agency.
B. Material Test Reports: For the following from a qualified testing agency:
   1. Steel Reinforcement:
      a. For reinforcement to be welded, mill test analysis for chemical composition and carbon equivalent of the steel in accordance with ASTM A706/A706M.
   2. Mechanical splice couplers.
C. Field quality-control reports.
D. Minutes of preinstallation conference.

1.5 DELIVERY, STORAGE, AND HANDLING

A. Steel Reinforcement: Deliver, store, and handle steel reinforcement to prevent bending and damage.
   1. Store reinforcement to avoid contact with earth.

PART 2 - PRODUCTS

2.1 STEEL REINFORCEMENT

A. Reinforcing Bars: ASTM A615, Grade 60, deformed.

2.2 REINFORCEMENT ACCESSORIES

A. Joint Dowel Plate: PNA-Diamond Dowel system.
B. Bar Supports: Bolsters, chairs, spacers, and other devices for spacing, supporting, and fastening reinforcing bars and welded-wire reinforcement in place.
   1. Manufacture bar supports from steel wire or plastic in accordance with CRSI's "Manual of Standard Practice."
      a. For concrete surfaces exposed to view, where legs of wire bar supports contact forms, use CRSI Class 1 plastic-protected steel wire, all-plastic bar supports, or CRSI Class 2 stainless steel bar supports.
C. Mechanical Splice Couplers: ACI 318 Type 2, same material of reinforcing bar being spliced; standard bar lock.
D. Steel Tie Wire: ASTM A1064, annealed steel, not less than 0.0508-inch in diameter.
   1. Finish: Plain, ASTM A884, Class A, Type 1.

2.3 FABRICATING REINFORCEMENT

A. Fabricate steel reinforcement according to CRSI's "Manual of Standard Practice."

PART 3 - EXECUTION

3.1 PREPARATION

A. Protection of In-Place Conditions:
   1. Do not cut or puncture vapor retarder.
   2. Repair damage and reseal vapor retarder before placing concrete.
B. Clean reinforcement of loose rust and mill scale, earth, ice, and other foreign materials that reduce bond to concrete.

3.2 INSTALLATION OF STEEL REINFORCEMENT

A. Comply with CRSI's "Manual of Standard Practice" for placing and supporting reinforcement.
B. Accurately position, support, and secure reinforcement against displacement.
   1. Locate and support reinforcement with bar supports to maintain minimum concrete cover.
   2. Do not tack weld crossing reinforcing bars.

C. Preserve clearance between bars of not less than 1 inch, not less than one bar diameter, or not less than 1-1/3-times size of large aggregate, whichever is greater.
D. Provide concrete coverage in accordance with ACI 318.
E. Set wire ties with ends directed into concrete not toward exposed concrete surfaces.
F. Splices: Lap splices as indicated on Drawings.
   1. Bars indicated to be continuous and all vertical bars shall be lapped not less than 36 bar diameters at splices or 24 inches, whichever is greater.
   2. Stagger splices in accordance with ACI 318.
   3. Mechanical Splice Couplers: Install in accordance with manufacturer's instructions.

3.3 JOINTS

A. Construction Joints: Install so strength and appearance of concrete are not impaired at locations indicated or as approved by Architect.
   1. Place joints perpendicular to main reinforcement.
   2. Do not continue reinforcement across construction joints unless otherwise indicated.
B. Doweled Joints: Install dowel plates and support assemblies at joints where indicated. Lubricate or asphalt coat one-half of plates length to prevent concrete bonding to one side of joint.

3.4 INSTALLATION TOLERANCES

A. Comply with ACI 117.

3.5 FIELD QUALITY CONTROL

A. Special Inspections: Owner will engage a special inspector and qualified testing and inspecting agency to perform field tests and inspections and prepare test reports.
B. Inspections:
   1. Steel-reinforcement placement.
   2. Steel-reinforcement mechanical splice couplers.

END OF SECTION

SECTION 03 30 00 - CAST-IN-PLACE CONCRETE

PART 1 - GENERAL

1.1 SUMMARY

A. Section Includes:
   1. Cast-in-place concrete, including concrete materials, mixture design, placement procedures, and finishes.

B. Related Requirements:
   1. Division 01 Specification Sections apply to Work of this Section.
   2. Section 03 10 00 "Concrete Forming and Accessories" for form-facing materials.
   3. Section 03 20 00 "Concrete Reinforcing" for steel reinforcing bars.
   4. Section 31 20 00 "Earth Moving" for drainage fill under slabs-on-ground.
   5. Section 32 13 13 "Concrete Paving" for concrete pavement and walks.

1.2 DEFINITIONS

A. Cementitious Materials: Portland cement alone or in combination with one or more of the following: blended hydraulic cement, fly ash; materials subject to compliance with requirements.

B. Water/Cement Ratio (w/cm): The ratio by weight of water to cementitious materials.

1.3 PREINSTALLATION MEETINGS

A. Preinstallation Conference: Conduct conference at Project site.
   1. Require representatives of each entity directly concerned with cast-in-place concrete to attend including the following:
      a. Contractor's superintendent.
      b. Independent testing agency responsible for concrete design mixtures.
      c. Ready-mix concrete manufacturer.
      d. Concrete Subcontractor.
   2. Review the following:
      a. Special inspection and testing and inspecting agency procedures for field quality control.
      b. Construction joints, control joints, isolation joints, and joint-filler strips.
      c. Semirigid joint fillers.
      d. Vapor-retarder installation.
      e. Anchor rod and anchorage device installation tolerances.
      f. Cold and hot weather concreting procedures.
      g. Concrete finishes and finishing.
      h. Curing procedures.
      i. Forms and form-removal limitations.
      j. Methods for achieving specified floor and slab flatness and levelness.
      k. Floor and slab flatness and levelness measurements.
      l. Concrete repair procedures.
      m. Concrete protection.

1.4 ACTION SUBMITTALS

A. Product Data: For each of the following.
   1. Portland cement.
   2. Fly ash.
   3. Blended hydraulic cement.
   4. Aggregates.
   5. Admixtures:
      a. Include limitations of use including restrictions on cementitious materials, supplementary cementitious materials, air entrainment, aggregates, temperature at time of concrete placement, relative humidity at time of concrete placement, curing conditions, and use of other admixtures.
   6. Vapor retarders.
   7. Curing materials.
      a. Include documentation from color pigment manufacturer, indicating that proposed methods of curing are recommended by color pigment manufacturer.
   8. Joint fillers.
   9. Repair materials.

B. Sustainable Design Submittals:

C. Design Mixtures: For each concrete mixture, include the following:
   1. Mixture identification.
   2. Minimum 28-day compressive strength.
   3. Durability exposure class.
   4. Maximum w/cm.
   5. Slump limit.
   6. Air content.
   7. Nominal maximum aggregate size.
   8. Indicate amounts of mixing water to be withheld for later addition at Project site if permitted.
   9. Intended placement method.
   10. Submit alternate design mixtures when characteristics of materials, Project conditions, weather, test results, or other circumstances warrant adjustments.

D. Shop Drawings:
   1. Construction Joint Layout: Indicate proposed construction joints required to construct the structure.
      a. Location of construction joints is subject to approval of the Architect.

E. Concrete Schedule: For each location of each Class of concrete indicated in "Concrete Mixtures" Article including the following:
   1. Concrete Class designation.
   2. Location within Project.
   3. Exposure Class designation.
   4. Formed Surface Finish designation and final finish.
   5. Final finish for floors.
   6. Curing process.

1.5 INFORMATIONAL SUBMITTALS

A. Qualification Data: For the following:
   1. Installer: Include copies of applicable ACI certificates.
   2. Ready-mixed concrete manufacturer.
   3. Testing agency: Include copies of applicable ACI certificates.

B. Material Certificates: For each of the following signed by manufacturers:
   1. Cementitious materials.
   2. Admixtures.
   3. Curing compounds.
   4. Bonding agents.
   5. Adhesives.
   6. Vapor retarders.
   7. Semirigid joint filler.
   8. Joint-filler strips.
   9. Repair materials.

C. Material Test Reports: For the following from a qualified testing agency:
   1. Portland cement.
   2. Fly ash.
   3. Blended hydraulic cement.
   4. Aggregates.
   5. Admixtures.

D. Floor surface flatness and levelness measurements report indicating compliance with specified tolerances.

E. Research Reports:
   1. For concrete admixtures in accordance with ICC's Acceptance Criteria AC198.

F. Preconstruction Test Reports: For each mix design.

G. Field quality-control reports.

H. Minutes of preinstallation conference.

1.6 QUALITY ASSURANCE

A. Installer Qualifications: A qualified installer who employs Project personnel qualified as an ACI-certified Flatwork Technician and Finisher and a supervisor who is a certified ACI Flatwork Concrete Finisher/Technician or an ACI Concrete Flatwork Technician.
   1. Post-Installed Concrete Anchors Installers: ACI-certified Adhesive Anchor Installer.

B. Ready-Mixed Concrete Manufacturer Qualifications: A firm experienced in manufacturing ready-mixed concrete products and that complies with ASTM C94 requirements for production facilities and equipment.
   1. Manufacturer certified in accordance with NRMCA's "Certification of Ready Mixed Concrete Production Facilities."

1.7 PRECONSTRUCTION TESTING

A. Preconstruction Testing Service: Engage a qualified testing agency to perform preconstruction testing on each concrete mixture.
   1. Include the following information in each test report:
      a. Admixture dosage rates.
      b. Slump.
      c. Air content.
      d. Seven-day compressive strength.
      e. 28-day compressive strength.

1.8 DELIVERY, STORAGE, AND HANDLING

A. Comply with ASTM C94 and ACI 301.

1.9 FIELD CONDITIONS

A. Cold-Weather Placement: Comply with ACI 301 and ACI 306.1 and as follows.
   1. Protect concrete Work from physical damage or reduced strength that could be caused by frost, freezing actions, or low temperatures.
   2. When average high and low temperature is expected to fall below 40 degrees F for 3 successive days, maintain delivered concrete mixture temperature within the temperature range required by ACI 301.
   3. Do not use frozen materials or materials containing ice or snow.
   4. Do not place concrete in contact with surfaces less than 35 degrees F, other than reinforcing steel.
   5. Do not use calcium chloride, salt, or other materials containing antifreeze agents or chemical accelerators unless otherwise specified and approved in mixture designs.
B. Hot-Weather Placement: Comply with ACI 301 and ACI 305.1, and as follows:
   1. Maintain concrete temperature at time of discharge to not exceed 95 degrees F.
   2. Fog-spray forms, steel reinforcement, and subgrade just before placing concrete. Keep subgrade uniformly moist without standing water, soft spots, or dry areas.

PART 2 - PRODUCTS

2.1 CONCRETE, GENERAL

A. ACI Publications: Comply with ACI 301 unless modified by requirements in the Contract Documents.

2.2 CONCRETE MATERIALS

A. Cementitious Materials:
   1. Portland Cement: ASTM C150, gray.
   2. Fly Ash: ASTM C618, Class F.
   3. Blended Hydraulic Cement: ASTM C595, Type IS, portland blast-furnace slag Type IL, portland-limestone cement.

B. Normal-Weight Aggregates: ASTM C33, Class 3S coarse aggregate or better, graded. Provide aggregates from a single source.
   1. Alkali-Silica Reaction: Comply with one of the following:
      a. Expansion Result of Aggregate: Not more than 0.04-percent at one-year when tested in accordance with ASTM C1293.
      b. Expansion Results of Aggregate and Cementitious Materials in Combination: Not more than 0.10-percent at an age of 16 days when tested in accordance with ASTM C1567.
      c. Alkali Content in Concrete: Not more than pounds per cubic yardfour for moderately reactive aggregate or pounds per cubic yardthree for highly reactive aggregate, when tested in accordance with ASTM C1293 and categorized in accordance with ASTM C1778, based on alkali content being calculated in accordance with ACI 301.
   2. Maximum Coarse-Aggregate Size: 1-3/4 inch nominal.
   3. Fine Aggregate: Free of materials with deleterious reactivity to alkali in cement.

C. Chemical Admixtures: Certified by manufacturer to be compatible with other admixtures that do not contribute water-soluble chloride ions exceeding those permitted in hardened concrete. Do not use calcium chloride or admixtures containing calcium chloride.
   1. Water-Reducing Admixture: ASTM C494, Type A.
   2. High-Range, Water-Reducing Admixture: ASTM C494, Type F.

2.3 VAPOR RETARDERS

A. Sheet Vapor Retarder, Class A: ASTM E1745, Class A, except with maximum water-vapor permeance of not less than 20-mils- thick. Include manufacturer's recommended adhesive or pressure-sensitive tape.

2.4 CURING MATERIALS

A. Evaporation Retarder: Waterborne, monomolecular film forming, manufactured for application to fresh concrete.

B. Absorptive Cover: AASHTO M 182, Class 2, burlap cloth made from jute or kenaf, weighing approximately 9 ouncees per square yard when dry.

C. Moisture-Retaining Cover: ASTM C171, polyethylene film burlap-polyethylene sheet.
   1. Color:
      a. Ambient Temperature Below 50 degrees F: Black.
      b. Ambient Temperature between 50 degrees F and 85 degrees F: Any color.
      c. Ambient Temperature Above 85 degrees F: White.

D. Water: Potable or complying with ASTM C1602.

E. Clear, Solvent-Borne, Membrane-Forming, Curing and Sealing Compound: ASTM C1315, Type 1, Class A.

2.5 RELATED MATERIALS

A. Expansion- and Isolation-Joint-Filler Strips: ASTM D1751, asphalt-saturated cellulosic fiber.

B. Semirigid Joint Filler: Two-component, semirigid, 100 percent solids, epoxy resin with a Type A shore durometer hardness of 80 in accordance with ASTM D2240.

C. Bonding Agent: ASTM C1059, Type II, nonredispersible, acrylic emulsion or styrene butadiene.

D. Epoxy Bonding Adhesive: ASTM C881, two-component epoxy resin, capable of humid curing and bonding to damp surfaces, of class suitable for application temperature and of grade and class to suit requirements, and as follows:
   1. Types IV and V, load bearing, for bonding hardened or freshly mixed concrete to hardened concrete.

2.6 CONCRETE MIXTURES, GENERAL

A. Prepare design mixtures for each type and strength of concrete, proportioned on the basis of laboratory trial mixture or field test data, or both, in accordance with ACI 301.
   1. Use a qualified testing agency for preparing and reporting proposed mixture designs, based on laboratory trial mixtures.
B. Cementitious Materials: Limit percentage, by weight, of cementitious materials other than portland cement in concrete as follows:
   1. Fly Ash: 25 percent by mass.
C. Admixtures: Use admixtures in accordance with manufacturer's written instructions.
   1. Use water-reducing, high-range water-reducing, or plasticizing admixture in concrete, as required, for placement and workability.
   2. Use water-reducing admixture in pumped concreteand concrete with a w/cm below 0.50.

2.7 CONCRETE MIXTURES

A. Class A: Normal-weight concrete used for footings, grade beams, and tie beams.
   1. Exposure Class: ACI 318 F2.
   2. Minimum Compressive Strength: 4,000 psi at 28 days.
   3. Maximum w/cm: .50.
   4. Slump Limit: 4 inches, plus or minus 1 inch.
B. Class B: Normal-weight concrete used for foundation walls.
   1. Exposure Class: ACI 318.
   2. Minimum Compressive Strength: 4,000 psi at 28 days.
   3. Maximum w/cm: 0.50.
   4. Slump Limit: 6 inches, plus or minus 1 inch for concrete with verified slump of 3 inches plus or minus 1 inchbefore adding high-range water-reducing admixture or plasticizing admixture at Project site.
C. Class C: Normal-weight concrete used for interior slabs-on-ground.
   1. Exposure Class: ACI 318 F0.
   2. Minimum Compressive Strength: 4,000 psi at 28 days.
   3. Maximum w/cm: 0.45.
   4. Minimum Cementitious Materials Content: Based on the requirements of ACI 301 for floors and relatee to nominal maximu aggregate sizes.
   5. Slump Limit: 6 inches, plus or minus 1 inch for concrete with verified slump of 3 inches plus or minus 1 inch before adding high-range water-reducing admixture or plasticizing admixture at Project site.
   6. Air Content:
      a. Do not use an air-entraining admixture or allow total air content to exceed 3 percent for concrete used in trowel-finished floors.

2.8 CONCRETE MIXING

A. Ready-Mixed Concrete: Measure, batch, mix, and deliver concrete in accordance with ASTM C94 and ASTM C1116, and furnish batch ticket information.

PART 3 - EXECUTION

3.1 EXAMINATION

A. Verification of Conditions:
1. Before placing concrete, verify that installation of concrete forms, accessories, and reinforcement, and embedded items is complete and that required inspections have been performed.
2. Do not proceed until unsatisfactory conditions have been corrected.

3.2 PREPARATION

A. Provide reasonable auxiliary services to accommodate field testing and inspections, acceptable to testing agency, including the following:
1. Daily access to the Work.
2. Incidental labor and facilities necessary to facilitate tests and inspections.
3. Secure space for storage, initial curing, and field curing of test samples, including source of water and continuous electrical power at Project site during site curing period for test samples.
4. Security and protection for test samples and for testing and inspection equipment at Project site.

3.3 INSTALLATION OF EMBEDDED ITEMS

A. Place and secure anchorage devices and other embedded items required for adjoining Work that is attached to or supported by cast-in-place concrete.
1. Use setting Drawings, templates, diagrams, instructions, and directions furnished with items to be embedded.
2. Install anchor rods, accurately located, to elevations required and complying with tolerances in Section 7.5 of ANSI/AISC 303.

3.4 INSTALLATION OF VAPOR RETARDER

A. Sheet Vapor Retarders: Place, protect, and repair sheet vapor retarder in accordance with ASTM E1643 and manufacturer's written instructions.
1. Install vapor retarder with longest dimension parallel with direction of concrete pour.
2. Face laps away from exposed direction of concrete pour.
3. Lap vapor retarder Down footings and grade beams not less than 6 inches, sealing vapor retarder to concrete.
4. Lap joints 6 inches and seal with manufacturer's recommended tape.

5. Terminate vapor retarder at the top of floor slabs and grade beams sealing entire perimeter to floor slabs, grade beams, or foundation walls.
6. Seal penetrations in accordance with vapor retarder manufacturer's instructions.
7. Protect vapor retarder during placement of reinforcement and concrete.
   a. Repair damaged areas by patching with vapor retarder material, overlapping damages area by 6 inches on all sides, and sealing to vapor retarder.

3.5 JOINTS

A. Construct joints true to line, with faces perpendicular to surface plane of concrete.
B. Construction Joints: Coordinate with floor slab pattern and concrete placement sequence.
   1. Install so strength and appearance of concrete are not impaired, at locations indicated on Drawings or as approved by Architect.
   2. Place joints perpendicular to main reinforcement.
      a. Cut reinforcement across construction joints unless otherwise indicated.
   3. Locate joints for beams, slabs, joists, and girders at third points of spans. Offset joints in girders a minimum distance of twice the beam width from a beam-girder intersection.
   4. Locate horizontal joints in walls and columns at underside of floors, slabs, beams, and girders and at the top of footings or floor slabs.
   5. Space vertical joints in walls as indicated on Drawings. Unless otherwise indicated on Drawings, locate vertical joints beside piers integral with walls, near corners, and in concealed locations where possible.
   6. Use a bonding agent at locations where fresh concrete is placed against hardened or partially hardened concrete surfaces.
C. Control Joints in Slabs-on-Ground: Form weakened-plane control joints, sectioning concrete into areas as indicated. Construct control joints for a depth equal to at least one-fourth of concrete thickness as follows:
   1. Sawed Joints: Form control joints with "early entry" proccess equipped with shatterproof abrasive or diamond-rimmed blades. Cut 1/8-inch wide joints into concrete when cutting action does not tear, abrade, or otherwise damage surface and before concrete develops random cracks.
D. Isolation Joints in Slabs-on-Ground: After removing formwork, install joint-filler strips at slab junctions with vertical surfaces, such as column pedestals, foundation walls, grade beams, and other locations, as indicated.
   1. Extend joint-filler strips full width and depth of joint, terminating flush with finished concrete surface unless otherwise indicated on Drawings.
   2. Terminate full-width joint-filler strips not less than 1/2-inch or more than 1-inch below finished concrete surface, where joint sealants are indicated.
   3. Install joint-filler strips in lengths as long as practicable. Where more than one length is required, lace or clip sections together.
E. Doweled Joints:
   1. Install dowel Pklates and support assemblies at joints where indicated on Drawings.
   2. Lubricate or asphalt coat one-half of dowel plates length to prevent concrete bonding to one side of joint.
F. Dowel Plates: Install dowel plates at joints where indicated on Drawings.

3.6 CONCRETE PLACEMENT

A. Before placing concrete, verify that installation of formwork, reinforcement, embedded items, and vapor retarder is complete and that required inspections are completed.
   1. Immediately prior to concrete placement, inspect vapor retarder for damage and deficient installation, and repair defective areas.
   2. Provide continuous inspection of vapor retarder during concrete placement and make necessary repairs to damaged areas as Work progresses.

B. Notify Architect and testing and inspection agencies 24 hours prior to commencement of concrete placement.

C. Do not add water to concrete during delivery, at Project site, but not to exceed the amount indicated on the concrete delivery ticket.
   1. Do not add water to concrete after adding high-range water-reducing admixtures to mixture.

D. Before test sampling and placing concrete, water may be added at Project site, subject to limitations of ACI 301, but not to exceed the amount indicated on the concrete delivery ticket.
   1. Do not add water to concrete after adding high-range water-reducing admixtures to mixture.

E. Deposit concrete continuously in one layer or in horizontal layers of such thickness that no new concrete is placed on concrete that has hardened enough to cause seams or planes of weakness.
   1. If a section cannot be placed continuously, provide construction joints as indicated.
   2. Deposit concrete to avoid segregation.
   3. Deposit concrete in horizontal layers of depth not to exceed formwork design pressures and in a manner to avoid inclined construction joints.
   4. Consolidate placed concrete with mechanical vibrating equipment in accordance with ACI 301.
      a. Do not use vibrators to transport concrete inside forms.
      b. Insert and withdraw vibrators vertically at uniformly spaced locations to rapidly penetrate placed layer and at least 6 inches into preceding layer.
      c. Do not insert vibrators into lower layers of concrete that have begun to lose plasticity.
      d. At each insertion, limit duration of vibration to time necessary to consolidate concrete, and complete embedment of reinforcement and other embedded items without causing mixture constituents to segregate.

F. Deposit and consolidate concrete for floors and slabs in a continuous operation, within limits of construction joints, until placement of a panel or section is complete.
   1. Do not place concrete floors and slabs in a checkerboard sequence.
   2. Consolidate concrete during placement operations, so concrete is thoroughly worked around reinforcement and other embedded items and into corners.
   3. Maintain reinforcement in position on chairs during concrete placement.
   4. Screed slab surfaces with a straightedge and strike off to correct elevations.
   5. Level concrete, cut high areas, and fill low areas.
   6. Slope surfaces uniformly to drains where required.
   7. Begin initial floating using bull floats or darbies to form a uniform and open-textured surface plane, before excess bleedwater appears on the surface.
   8. Do not further disturb slab surfaces before starting finishing operations.

3.7 FINISHING FORMED SURFACES

A. As-Cast Surface Finishes:
   1. ACI 301 Surface Finish SF-2.0: As-cast concrete texture imparted by form-facing material, arranged in an orderly and symmetrical manner with a minimum of seams.
      a. Patch voids larger than 3/4-inch wide or 1/2-inch deep.
      b. Remove projections larger than 1/4-inch.
      c. Patch tie holes.
      d. Surface Tolerance: ACI 117 Class B.
      e. Locations: Apply to concrete surfaces exposed to public view.

B. Related Unformed Surfaces:
   1. At tops of walls, horizontal offsets, and similar unformed surfaces adjacent to formed surfaces, strike off smooth and finish with a color and texture matching adjacent formed surfaces.
   2. Continue final surface treatment of formed surfaces uniformly across adjacent unformed surfaces unless otherwise indicated.

3.8 FINISHING FLOORS AND SLABS

A. Comply with ACI 302.1R recommendations for screeding, restraightening, and finishing operations for concrete surfaces. Do not wet concrete surfaces.

B. Float Finish:
   1. When bleedwater sheen has disappeared and concrete surface has stiffened sufficiently to permit operation of specific float apparatus, consolidate concrete surface with power-driven floats or by hand floating if area is small or inaccessible to power-driven floats.
   2. Repeat float passes and restraightening until surface is left with a uniform, smooth, granular texture and complies with ACI 117 tolerances for conventional concrete.
   3. Apply float finish to surfaces to receive trowel finish.

C. Trowel Finish:
   1. After applying float finish, apply first troweling and consolidate concrete by hand or power-driven trowel.
   2. Continue troweling passes and restraighten until surface is free of trowel marks and uniform in texture and appearance.
   3. Grind smooth any surface defects that would telegraph through applied coatings or floor coverings.
   4. Do not add water to concrete surface.
   5. Do not apply hard-troweled finish to concrete, which has a total air content greater than 3 percent.
   6. Apply a trowel finish to surfaces exposed to view or to be covered with resilient flooring, carpet, ceramic tile.
   7. Finish surfaces to the following tolerances, in accordance with ASTM E1155, for a randomly trafficked floor surface:
      a. Slabs on Ground:
         1) Finish and measure surface so gap at any point between concrete surface and an unleveled, freestanding, 10-feet long straightedge resting on two high spots and placed anywhere on the surface does not exceed 1/4-inch and also no more than 1/16-inch in 2 feet.

D. Broom Finish: Apply a broom finish to exterior concrete platforms, steps, ramps, and locations indicated on Drawings.
   1. Immediately after float finishing, slightly roughen trafficked surface by brooming with fiber-bristle broom perpendicular to main traffic route.
   2. Coordinate required final finish with Architect before application.

3.9 INSTALLATION OF MISCELLANEOUS CONCRETE ITEMS

A. Filling In:
   1. Fill in holes and openings left in concrete structures after Work of other trades is in place unless otherwise indicated.
   2. Mix, place, and cure concrete, as specified, to blend with in-place construction.
   3. Provide other miscellaneous concrete filling indicated or required to complete the Work.

B. Curbs: Provide monolithic finish to interior curbs by stripping forms while concrete is still green and by steel-troweling surfaces to a hard, dense finish with corners, intersections, and terminations slightly rounded.

C. Equipment Bases and Foundations:
   1. Coordinate sizes and locations of concrete bases with actual equipment provided.
   2. Construct concrete bases 6 inches high unless otherwise indicated on Drawings, and extend base not less than 6 inches in each direction beyond the maximum dimensions of supported equipment unless otherwise indicated on Drawings, or unless required for seismic anchor support.
   3. Minimum Compressive Strength: 4,000 psi 3,000 psi at 28 days.
   4. Install dowel rods to connect concrete base to concrete floor. Unless otherwise indicated, install dowel rods on 18-inch centers around the full perimeter of concrete base.
   5. For supported equipment, install epoxy-coated anchor bolts that extend through concrete base and anchor into structural concrete substrate.
   6. Prior to pouring concrete, place and secure anchorage devices.
      a. Use setting Drawings, templates, diagrams, instructions, and directions furnished with items to be embedded.
      b. Cast anchor-bolt insert into bases.
      c. Install anchor bolts to elevations required for proper attachment to supported equipment.

3.10 CONCRETE CURING

A. Protect freshly placed concrete from premature drying and excessive cold or hot temperatures.
   1. Comply with ACI 301 and ACI 306.1 for cold weather protection during curing.
   2. Comply with ACI 301 and ACI 305.1 for hot-weather protection during curing.

B. Curing Unformed Surfaces: Comply with ACI 308.1 as follows:
   1. Begin curing immediately after finishing concrete.
   2. Interior Concrete Floors:
      a. Floors to Receive Floor Coverings Specified in Other Sections: Contractor has option of the following:
         1) Absorptive Cover: As soon as concrete has sufficient set to permit application without marring concrete surface, install prewetted absorptive cover over entire area of floor.
            a) Lap edges and ends of absorptive cover not less than 12 inches.
            b) Maintain absorptive cover water saturated, and in place, for duration of curing period, but not less than 7 days.
         2) Moisture-Retaining-Cover Curing: Cover concrete surfaces with moisture-retaining cover for curing concrete, placed in widest practicable width, with sides and ends lapped at least 12 inches, and sealed by waterproof tape or adhesive.
            a) Immediately repair any holes or tears during curing period, using cover material and waterproof tape.
            b) Cure for not less than 7 days.
      b. Floors to Receive Curing Compound after moist cure:
         1) Apply uniformly in continuous operation by power spray or roller in accordance with manufacturer's written instructions.
         2) Recoat areas subjected to heavy rainfall within three hours after initial application.
         3) Maintain continuity of coating, and repair damage during curing period.
         4) Removal: After curing period has elapsed, remove curing compound without damaging concrete surfaces by method recommended by curing compound manufacturer unless manufacturer certifies curing compound does not interfere with bonding of floor covering used on Project.

3.11 TOLERANCES

A. Conform to ACI 117.

3.12 JOINT FILLING

A. Prepare, clean, and install joint filler in accordance with manufacturer's written instructions.
   1. Defer joint filling until concrete has aged at least one month.
   2. Do not fill joints until construction traffic has permanently ceased.
B. Remove dirt, debris, saw cuttings, curing compounds, and sealers from joints; leave contact faces of joints clean and dry.
C. Install semirigid joint filler full depth in saw-cut joints and at least 2 inches deep in formed joints.
D. Overfill joint, and trim joint filler flush with top of joint after hardening.

3.13 CONCRETE SURFACE REPAIRS

A. Defective Concrete:
   1. Repair and patch defective areas when approved by Architect.
   2. Remove and replace concrete that cannot be repaired and patched to Architect's approval.

B. Patching Mortar: Mix dry-pack patching mortar, consisting of one part portland cement to two and one-half parts fine aggregate passing a No. 16 sieve, using only enough water for handling and placing.

C. Repairing Formed Surfaces: Surface defects include color and texture irregularities, cracks, spalls, air bubbles, honeycombs, rock pockets, fins and other projections on the surface, and stains and other discolorations that cannot be removed by cleaning.
   1. Immediately after form removal, cut out honeycombs, rock pockets, and voids more than 1/2-inch in any dimension to solid concrete.
      a. Limit cut depth to 3/4-inch.
      b. Make edges of cuts perpendicular to concrete surface.
      c. Clean, dampen with water, and brush-coat holes and voids with bonding agent.
      d. Fill and compact with patching mortar before bonding agent has dried.
      e. Fill form-tie voids with patching mortar or cone plugs secured in place with bonding agent.
   2. Repair defects on surfaces exposed to view by blending white portland cement and standard portland cement, so that, when dry, patching mortar matches surrounding color.
      a. Patch a test area at inconspicuous locations to verify mixture and color match before proceeding with patching.
      b. Compact mortar in place and strike off slightly higher than surrounding surface.
   3. Repair defects on concealed formed surfaces that will affect concrete's durability and structural performance as determined by Engineer.

D. Repairing Unformed Surfaces:
   1. Test unformed surfaces, such as floors and slabs, for finish, and verify surface tolerances specified for each surface.
      a. Correct low and high areas.
      b. Test surfaces sloped to drain for trueness of slope and smoothness; use a sloped template.
   2. Repair finished surfaces containing surface defects, including spalls, popouts, honeycombs, rock pockets, crazing, and cracks in excess of 0.01-inch wide or that penetrate to reinforcement or completely through unreinforced sections regardless of width, and other objectionable conditions.
   3. After concrete has cured at least 14 days, correct high areas by grinding.
   4. Correct localized low areas during, or immediately after, completing surface-finishing operations by cutting out low areas and replacing with patching mortar.
      a. Finish repaired areas to blend into adjacent concrete.
   5. Repair defective areas, except random cracks and single holes 1-inch or less in diameter, by cutting out and replacing with fresh concrete.
      a. Remove defective areas with clean, square cuts, and expose steel reinforcement with at least a 3/4-inch clearance all around.

b. Dampen concrete surfaces in contact with patching concrete and apply bonding agent.
c. Mix patching concrete of same materials and mixture as original concrete, except without coarse aggregate.
d. Place, compact, and finish to blend with adjacent finished concrete.
e. Cure in same manner as adjacent concrete.

6. Repair random cracks and single holes 1-inch or less in diameter with patching mortar.
   a. Groove top of cracks and cut out holes to sound concrete, and clean off dust, dirt, and loose particles.
   b. Dampen cleaned concrete surfaces and apply bonding agent.
   c. Place patching mortar before bonding agent has dried.
   d. Compact patching mortar and finish to match adjacent concrete.
   e. Keep patched area continuously moist for at least 72 hours.

E. Perform structural repairs of concrete, subject to Engineer's approval, using epoxy adhesive and patching mortar.

F. Repair materials and installation not specified above may be used, subject to Engineer's approval.

3.14 FIELD QUALITY CONTROL

A. Special Inspections: Owner will engage a special inspector to perform field tests and inspections and prepare testing and inspection reports.

B. Testing Agency: Owner will engage a qualified testing and inspecting agency to perform tests and inspections and to submit reports.
   1. Testing agency shall be responsible for providing curing container for composite samples on Site and verifying that field-cured composite samples are cured in accordance with ASTM C31.
   2. Testing agency shall immediately report to Architect, Contractor, and concrete manufacturer any failure of Work to comply with Contract Documents.
   3. Testing agency shall report results of tests and inspections, in writing, to Owner, Architect, Contractor, and concrete manufacturer within 48 hours of inspections and tests.
      a. Test reports shall include reporting requirements of ASTM C31, ASTM C39, and ACI 301, including the following as applicable to each test and inspection:
         1) Project name.
         2) Name of testing agency.
         3) Names and certification numbers of field and laboratory technicians performing inspections and testing.
         4) Name of concrete manufacturer.
         5) Date and time of inspection, sampling, and field testing.
         6) Date and time of concrete placement.
         7) Location in Work of concrete represented by samples.
         8) Date and time sample was obtained.
         9) Truck and batch ticket numbers.
         10) Design compressive strength at 28 days.
         11) Concrete mixture designation, proportions, and materials.
         12) Field test results.

13) Information on storage and curing of samples before testing, including curing method and maximum and minimum temperatures during initial curing period.
14) Type of fracture and compressive break strengths at 7 days and 28 days.

C. Batch Tickets: For each load delivered, submit three copies of batch delivery ticket to testing agency, indicating quantity, mix identification, admixtures, design strength, aggregate size, design air content, design slump at time of batching, and amount of water that can be added at Project site.

D. Inspections:
1. Headed bolts and studs.
2. Verification of use of required design mixture.
3. Concrete placement, including conveying and depositing.
4. Curing procedures and maintenance of curing temperature.
5. Batch Plant Inspections: On a random basis, as determined by Engineer.

E. Concrete Tests: Testing of composite samples of fresh concrete obtained in accordance with ASTM C 172 shall be performed in accordance with the following requirements:
1. Testing Frequency: Obtain one composite sample for each day's pour of each concrete mixture exceeding 5 cubic yards, but less than 25 cubic yards, plus one set for each additional 50 cubic yards or fraction thereof.
a. When frequency of testing provides fewer than five compressive-strength tests for each concrete mixture, testing shall be conducted from at least five randomly selected batches or from each batch if fewer than five are used.
2. Slump: ASTM C143:
a. One test at point of placement for each composite sample, but not less than one test for each day's pour of each concrete mixture.
b. Perform additional tests when concrete consistency appears to change.
3. Concrete Temperature: ASTM C1064/C1064M:
a. One test hourly when air temperature is 40 degrees F and below or 80 degrees F and above, and one test for each composite sample.
4. Compression Test Specimens: ASTM C31/C31M:
a. Cast and laboratory cure two sets of four 6-inch by 12-inch or 4-inch by 8-inch cylinder specimens for each composite sample.
5. Compressive-Strength Tests: ASTM C39.
a. Test one set of two laboratory-cured specimens at 7 days and one set of two specimens at 28 days.
b. A compressive-strength test shall be the average compressive strength from a set of two specimens obtained from same composite sample and tested at age indicated.
6. Strength of each concrete mixture will be satisfactory if every average of any three consecutive compressive-strength tests equals or exceeds specified compressive strength, and no compressive-strength test value falls below specified compressive strength by more than 500 psi if specified compressive strength is 5,000 psi, or no compressive strength test value is less than 10 percent of specified compressive strength if specified compressive strength is greater than 5,000 psi.
7. Nondestructive Testing: Impact hammer, sonoscope, or other nondestructive device may be permitted by Architect but will not be used as sole basis for approval or rejection of concrete.

8. Additional Tests:
   a. Testing and inspecting agency shall make additional tests of concrete when test results indicate that slump, air entrainment, compressive strengths, or other requirements have not been met, as directed byArchitect.
   b. Testing and inspecting agency may conduct tests to determine adequacy of concrete by cored cylinders complying with ASTM C42 or by other methods as directed by Architect.
      1) Acceptance criteria for concrete strength shall be in accordance with ACI 301 section 1.6.6.3.
9. Additional testing and inspecting, at Contractor's expense, will be performed to determine compliance of replaced or additional Work with specified requirements.
10. Correct deficiencies in the Work that test reports and inspections indicate do not comply with the Contract Documents.

F. Measure floor and slab flatness and levelness in accordance with ASTM E1155 within 24 hours of completion of floor finishing and promptly report test results to Architect.

3.15 PROTECTION

A. Protect concrete surfaces as follows:
1. Protect from petroleum stains.
2. Diaper hydraulic equipment used over concrete surfaces.
3. Prohibit vehicles from interior concrete slabs.
4. Prohibit use of pipe-cutting machinery over concrete surfaces.
5. Prohibit placement of steel items on concrete surfaces.
6. Prohibit use of acids or acidic detergents over concrete surfaces.

END OF SECTION

SECTION 05 40 00 - COLD-FORMED METAL FRAMING

PART 1 - GENERAL

1.1 SUMMARY

A. Section Includes:
   1. Load-bearing fwall framing.
   2. Formed joist framing.

B. Related Requirements:
   1. Division 01 Specification Sections apply to Work of this Section.
   2. Section 05 50 00 "Metal Fabrications" for miscellaneous steel shapes, masonry shelf angles, and connections used with cold-formed metal framing.
   3. Section 09 21 16 - Gypsum Board Assemblies: Lightweight, non-load-bearing metal stud framing.
   4. Section 09 22 16 - Non-Structural Metal Framing.

1.2 PREINSTALLATION MEETINGS

A. Preinstallation Conference: Conduct conference Project site.

1.3 ACTION SUBMITTALS

A. Product Data: For the following:
   1. Cold-formed steel framing materials.
   2. Load-bearing wall framing.
   3. Verical deflection clips.
   4. Double deflection track.
   5. Floor joist framing.
   6. Post-installed anchors.
   7. Power-actuated anchors.
   8. Sill sealer gasket.

B. Shop Drawings:
   1. Indicate layout, spacings, sizes, thicknesses, and type of cold-formedsteel framing; fabrication; and and fastening and anchorage details, includingmechanical fasteners,.
   2. Indicate reinforcing channels, opening framing, supplemental framing, strapping, bracing, bridges, splices, accessories, connection details, and attachment to adjoining work..

C. Delegated Design Submittals: For cold-formed steel framing.

1.4 INFORMATIONAL SUBMITTALS

A. Qualification Data: For testing agency.
B. Welding certificates.
C. Product Certificates: For each type of code-compliance certification for studs and tracks.

D. Product Test Reports: For each listed product, for tests performed by manufacturer and witnessed by a qualified testing agency.
   1. Steel sheet.
   2. Expansion anchors.
E. Power-actuated anchors.
   1. Mechanical fasteners.
   2. Vertical deflection clips.
   3. Miscellaneous structural clips and accessories.
F. Research Reports:
   1. For nonstandard cold-formed steel framing post-installed anchors and power-actuated fasteners from ICC-ES.
   2. For sill sealer gasket/termite barrier, showing compliance with ICC-ES AC380.

1.5 QUALITY ASSURANCE

A. Testing Agency Qualifications: Qualified according to ASTM E329 for testing indicated.
B. Product Tests: Mill certificates or data from a qualified independent testing agency indicating steel sheet complies with requirements, including base-metal thickness, yield strength, tensile strength, total elongation, chemical requirements, and metallic-coating thickness.
C. Code-Compliance Certification of Studs and Tracks: Provide documentation that framing members are certified according to the product-certification program of the Certified Steel Stud Association or the Steel Stud Manufacturers Association.
D. Welding Qualifications: Qualify procedures and personnel according to the following:
   1. AWS D1.1, "Structural Welding Code - Steel."
   2. AWS D1.3, "Structural Welding Code- Sheet Steel."

1.6 DELIVERY, STORAGE, AND HANDLING

A. Protect and store cold-formed steel framing from corrosion, moisture staining, deformation, and other damage during delivery, storage, and handling as required in AISI S202,

PART 2 - PRODUCTS

2.1 PERFORMANCE REQUIREMENTS

A. Delegated Design: Engage a qualified professional engineer, as defined in Section 01 40 00 "Quality Requirements," to design cold-formed steel framing.
B. Structural Performance: Provide cold-fomed steel framing capable of withstanding design loads within limits and under conditions indicated.
   1. Design Loads: As indicated on Drawings.
   2. Deflection Limits: Design framing systems to withstand design loads without deflections greater than the following:
      a. Exterior Load-Bearing Wall Framing: Horizontal deflection of 1/360 of the wall height.
      b. Interior Load-Bearing Wall Framing: Horizontal defletion of 1/360 of the wall height under a horizontal load of 5 pound force per square feet.

c. Floor Joist Framing: Vertical deflection of 1/480 for live loads and 1/240 for total loads of the span.

3. Design framing sysems to provide for movement of framing members loecated outside the insulated building envelope without damage or over-stressing, sheathing failure, connection failure, undue strain on fasteners and anchors, or other detrimental effects when subject to a maximum ambient temperature change of 120 degrees F.
4. Cold-Formed Steel Framing Standards: Unless more stringent requirements are indicated, framing complies with AISI S100 and ASTM C955.

2.2 COLD-FORMED STEEL FRAMING MATERIALS

A. Framing Members, General: Comply with ASTM C955 for conditions indicated.
B. Steel Sheet: ASTM A1003, Structural Grade, Type H, metallic coated, of grade and coating designation as follows:
   1. Grade: As required by structural performance.
   2. Coating: G60.
C. Sheet Sheet for Vertical Deflection Clips: ATM A653, structural steel, zinc coated, of grade and coating as follows:
   1. Grade: As required by structural performance.
   2. Coating: G60.

2.3 LOAD-BEARING WALL FRAMING

A. Steel Studs: Manufacturer's standard C-shaped steel studs, off web depths indicated, punched, with stiffened flanges, and as follows:
   1. Minimum Base-Metal Thickness: 0.0538-inch.
   2. Flange Width: 1-5/8 inches.
B. Steel Track: Manufacturer's standard U-shaped steel traeck, of web depths indicated, unpunched, with straight flanges, and as follows:
   1. Minimum Base-Metal Thickness: Matching steel studs.
   2. Flange Width: 1-1/4 inches.
C. Steel Box or Back-to-Back Headers: Manufacturer's standard C-shapes used to form header beams, of web depths indicated, unpunched, with stiffened flanges, and as follows:
   1. Minimum Base-Metal Thickness: 0.0538-inch.
   2. Flange Width: 1-5/8 inches.
D. Single Deflection Track: Manufacturer's single, deep-leg, U-shaped steel track; unpunched, with unstiffened flanges, of web depth to contain studs while allowing free vertical movement, with flanges designed to support horizontal loads and transfer them to the primary structure, and as follows.
   1. Minimum Base-Metal Thickness: 0.0538-inch.
   2. Flange Width: 1 inch plus the design gap.
E. Double Deflection Tracks: Manufacturer's double, deep leg, U-shaped steel tracks, consisting of nested inner and outer track, unpunced, with unstiffened flanges.
   1. Out Track: Of web depth to allow free vertical movement of inner track, with flanges designedto support horizonal loads and transfer them to the primary structure, and as follows:
      a. Minimum Base-Metal Thickness: 0.0538-inch.
      b. Flange Width: 1 inch.

2. Inner Track: Of web depth indicated and as follows:
   a. Minimum Base-Metal Thickness: 0.0538-inch.
   b. Flange Width: Dimension equal to sum of outer deflection track flange width plus 1 inch.

2.4 INTERIOR NON-LOAD-BEARING WALL FRAMING

A. Steel Studes: manufacturer's standard C-shaped steel studs, of web depths indicated, punchh, with stiffened flanges, and as follows:
   1. Minimum Base-Metal Thickness: 0,0538-inch.
   2. Flange Width: 1-5/8 inches.

B. Steel Track: Manufacturer's standard U-shaped steel track, of web depths indicated, unpunched, with unstiffened flanges, and as follows:
   1. Minimum Base-Metal Thickness: Matching steel studs.
   2. Flange Width: 1-1/4 inches.

C. Single Deflection Track: Manufacturer's single, deep-leg, U-shaped steel track, unpunched, with unstiffened flanges, of web depth to contain studs while allowing free vertical movement, with flanges designed to support horizontal loads and transfer them to primary structure, and as follows:
   1. Minimum Base-Metal Thickness: 0.0538-inch.
   2. Flange Width: 1 inch plus the design gap.

D. Double Deflection Track: Manufacturer's double, deep-leg, U-shaped steel tracks, consisting of nesed inner and outher tracks; unpunchhhed, with unstiffened flanges.
   1. Out Track: Of web depth to allow free vertical movement of inner track, with flanges designedto support horizonal loads and transfer them to the primary structure, and as follows:
      a. Minimum Base-Metal Thickness: 0.0538-inch.
      b. Flange Width: 1 inch plus the design gap.
   2. Inner Track: Of web depth indicated and as follows:
      a. Minimum Base-Metal Thickness: 0.0538-inch.
      b. Flange Width: Dimension equal to sum of outer deflection track flange width plus 1 inch.

2.5 FLOOR JOIST FRAMING

A. Steel Joists: Manufacturer's standard C-shaped steel joists, of web depth indicated, unpunched, wih stiffened flanges, and as follows:
   1. Minimum Base-Metal Thickness: 0.0677-inch.
   2. Flange Width: 2 inches minimum

B. Steel Joist Track: Manufacturer's standard U-shaped steel joist track, of web depths indicated, unpunches, wth unstiffened flanges, and as follows:
   a. Mathing steel joists.
   b. Flange Width: As required.

2.6 FRAMING ACCESSORIES

A. Fabricate steel-framing accessories from ASTM A1003, Structural Grade, Type H, metallic-coated steel sheet, of same grade, and coating designation used for framing members.

B. Provide accessories of manufacturer's standard thickness and configuration, unless otherwise indicated, as follows:
   1. Supplementary framing.
   2. Bracing, bridging, and solid blocking.
   3. Web stiffeners.
   4. Anchor clips.
   5. End clips.
   6. Foundaton clips
   7. Gusset plates.
   8. Stud kickers and knee braces.
   9. Joist hangers and end closures.
   10. Hole-reinforcing plates.
   11. Backer plates.

2.7 ANCHORS, CLIPS, AND FASTENERS

A. Steel Shapes and Clip: ASTM A36, zinc coated by hot-dip process according to ASTM A123.

B. Anchor Bolts: ASTM F1554, Grade 36, threaded carbon-steel hex-headed bolts, carbon-steel nuts, and flat, hardened-steel washers: zinc coated by hot-dip proccess according to ASTM 153, Class C.

C. Post-Installed Anchors: Fastener systems with bolts of same basic metal as fastened metal, if visible, unless otherwise indicted; with working capacity greater than or equal to the design load, according to an evaluation report acceptable to authorities having jurisdiction, based on ICC-ES AC01, ICC-ES AC193, ICC-ES AC58, OR ICC-ES AC308 as appropriate for the substrate.
   1. Uses: Securing cold-formed steel framing to structure.
   2. Type: Adhesive anchor.
   3. Material for Interior Locations: Carbon-steel components zinc plated to comply with ASTM B633 OR ASTM F1941, Class Fe/Zn 5, unless otherwise indicated.

D. Power-Actuated Anchors: Fastener systems with working capacity greater than or equal to the design load, according to an evaluation report acceptable to authorities having jurisdiction, based on ICC-ES AC70.

E. Mechanical Fasteners: ASTM C1513, corrosion-resistant-coated, self-drilling, self-tapping, steel drill screwes.
   1. Head Type: Low-profile head beneath sheathing, manufacturer's standard elsewhere.

F. Welding Electrodes: Comply with AWS standards.

2.8 MISCELLANEOUS MATERIALS

A. Galvanizing Repair Paint; ATM A780, MIL-P-21035B, OR SSPC-Paint 20.

B. Nonmetallic, Nonshrink Grout: Factory-packaged, nonmetallic, noncorrosive, nonstaining grout, complying with ASTM C1107, and with a fluid consisteny and 30-minute working time.

C. Shims: Load-bearing, high-density, multimonomer, nonleaching plastic; or cold-formed steel of same grade and metallic coating as framing members supported by shims.

D. Sill Sealer Gasket/Termite Barrier: Minimum 68-mil nominal thickness, self-adhering sheet consisting of 64 mils of rubberized asphalt laminated on one side to a 4-mil-thick, polyethylene-film reinforcement, and with release liner on adhesive side.
   1. Physical Properites:
      a. Peel Adhesion: 17.0 pounds per inch of width when tested in accordance with ASTM D412.
      b. Low-Temperature Flexibility: Pass at minus 25 degrees F when tested in accordance with ASTM D146.
      c. Water Vapor Permeance: 0.05 permeance maximum when tested in accordance with ASTM E96, Method B.
      d. Resistance to Termite Penetration: Comply with ICC-ES AC380.

2.9 FABRICATION

A. Fabricate cold-formed steel framing and accessories plumb, square, and true to line, and with connections securely fastened, according to referenced AISI's specifications and standards, manufacturer's written instructions, and requirements in this Section,
   1. Fabricate framing assemblies using jigs or templates.
   2. Cut framing members by sawing or shearing; do not torch out.
   3. Fasten cold-formed steel framing members by welding, screw fastening, clinch fastening, pneumatic pin fastening, or riveting as standard with fabricator. Wire tying of framing members is not permitted.
      a. Comply with AW D1.3 requirements and procedures for welding, appearance and qualty of welds, and methods used in correcting welding work.
      b. Locate mechanical fasteners and install according to Shop Drawings, with screws penetrating jointed members by no fewer than three exposed screw threads.
   4. Fasten other materials to cold-formed steel framing by welding, bolting, pneumatic pin fastening, or screw fastening according to Shop Drawings.
B. Reinforce, stiffen, and brace framing assemblies to withstand handling, delivery, and erection stresses. Lift fabricated assemblies by means that prevent damage or permanent distortion.
C. Tolerances: Fabricte assemblies level ,plumb, and true to line at a maximum allowable variation of 1/8-inch in 10 feet and as follows:
   1. Spacing: Space individual framing members no more than plus or minus 1/8-inch from plan location. Cumulative errors are not to exceed minimum fastening requiremens of sheathing or other finishing materials.
   2. Squareness: Fabricate each cold-formed steel framing assembly to a maximum out-of-square tolerance of 1/8-inch.

PART 3 - EXECUTION

3.1 EXAMINATION

A. Examine substrates, areas, conditions and butting structural framing for compliance with requirements for installation tolerances and other conditions affecting performance of Work.
B. Proceed with installation onlty after unsatisfactory conditions have been corrected.

3.2 PREPARATION

A. Install load-bearing shims or grout between the underside of load-bearing wall bottom track and the top of foundation wall or slab at locations with a gap larger than 1/4-inch to ensure a uniform bearing surface on supporting concrete or masonry construction.

B. Install sill sealer gasket/termite barrier in accordance with manufacturer's written instructions at the underside of wall bottom track or rim track and at the top of foundation wall or slab at stud or joist locations.

3.3 INSTALLATION, GENERAL

A. Cold-formed steel framing may be shop or field fabricated for installation or it may be field assembled.

B. Install cold-formed steel framing according to AISI200, AISI S202, and manufacturer's written instructions unless more stringent requirements are indicated.

C. Install shop- or field-fabricted, cold-formed framing and securely anchor to supporting structure.
   1. Screw bolt, or weld wall panels at horizontal and vertical junctures to produce flush, even, true-to-line joints with maximum variation in plane and true position between fabricated panels not exceeding 1/16-inch.

D. Install cold-fired steel framing and accessories plumb, square, and true-to-line, and with connections securely fastened.
   1. Cut framing members by sawing or shearing; do not torch cut.
   2. Fasten, cold-formed steel framing members by welding, screw fastening, clinch fastening, or riveting. Wire tying of framing members is not permitted.
      a. Comply with AWS D1.3 requirements and procedures for welding, appearance and quality of welds, and methods used in correcting welding Work.
      b. Locate mechanical fastener, install according to Shop Drawings, and comply with requirements for spacing, edge distances, and screw penetration.

E. Install temporary bracing and supports to secure framing and support loads equal to those for which structure was designed. Maintain braces and supports in place, undisturbed, until entire integrated supporting structure has been completed and permanent connections to framing are secured.

F. Install insulation specified in Section 07 21 00 "Thermal Insulation," in framing-assembly members, such as headers, sills, boxed joists, and multiple studs at openings, that are inaccessible on completion of framing work

G. Fasten hole-reinforcing plate over web penetrations that exceed size of manufacturer's approved or standard punched openings.

3.4 INSTALLATION OF LOAD-BEARING WALL FRAMING

A. Install continuous top and bottom tracks sized to match studs. Align tracks accurately and securely anchor at corners and ends and at spacings as follows:
   1. Anchor Spacing: As shown on Shop Drawings.

B. Squarely seat studs against top and bottom tracks with gap not exceeding 1/8-inch between the end of wall-framing member and the web of track.
   1. Fasten both flanges of studs to top and bottom tracks.
   2. Space studs as follows:
      a. Stud Spacing: 16 inches.

C. Set studs plumb, except as needed for diagonal bracing or required for nonplumb walls or warped surfaces and similar configurations.
D. Align studs vertically where floor framing interrupts wall-framing continuity. Where studs cannot be aligned, continuously reinforce track to transfer loads.
E. Align floor and roof framing over studs according to AISI S200, Section C1. Where framing cannot be aligned, continuously reinforce track to transfer loads.
F. Anchor studs abutting structural columns or walls, including masonry walls, to supporting structure.
G. Install headers over wall openings wider than stud spacing. Locate headers above openings. Fabricate headers of compound shapes indicated or required to transfer load to supporting studs, complete with clip-angle connectors, web stiffeners, or gusset plates.
    1. Frame wall openings with not less than a double stud at each jamb of frame. Fasten jamb members together to uniformly distribute loads.
    2. Install tracks and jack studs above and below wall openings. Anchor tracks to jamb studs with clip angles or by welding, and space jack studs same as full-height wall studs.
H. Install supplementary framing, blocking, and bracing in stud framing indicted to support fixtures, equipment, services, casework, heavy trim, furnishings, and similar work requiring attachment to framing.
    1. If type of supplementary support is not indicated comply with stud manufacturer's written recommendations and industry standards in each case considering weight or load resulting from item supported.
I. Install horizontal bridging in stud system, spaced vertically 48 inches. Fasten at each stud intersection.
    1. Channel Bridging: Cold-rolled steel channel, welded or mechanically fastened to webs of punched studs with a minimum of two screws into each flange of the clip angle for framing members up to 6 inches deep.
    2. Strap Bridging: Combination of flat, taut, steel sheet straps of width and thickness indicated and stud-track solid blocking of width and thickness to match studs. Fasten flat straps to stud flanges and secure solid blocking to stud webs or flanges.
    3. Bar Bridging: Proprietary bridging bars installed according to manufacturer's written instructions.
J. Install miscellaneous framing and connections, including supplementary framing, web stiffeners, clip angles, continuous angles, anchors, and fasteners to provide a complete and stable wall-framing system.

3.5 INSTALLATION OF EXTERIOR NON-LOAD BEARING WALL FRAMING

A. Install continuous tracks sized to match studs. Align tracks accurately and securely anchor to supporting structure.
B. Fasten both flanges of studs to top and bottom tracks unless otherwise indicated. Space studs as follows:
    1. Stud Spacing: 16 inches.
C. Set studs plumb except as needed for diagonal bracing or required for non-plumb walls or warped surfaces and similar requirements.
D. Isolate non-load-bearing steel framing from building structure to prevent transfer to vertical loads while providing lateral support.
    1. Install single deep-leg deflection tracks and anchor to building structure.
    2. Install double deep-leg deflection tracks and anchor out track to building structure.

E. Install horizontal bridging in wall studs, spaced vertically in rows indicated on Shop Drawings but no more than 48 inches apart. Fasten at each stud intersection.
   1. Channel Bridging: Cold-rolled steel channel, welded or mechanically fastened, to webs of punched studs.
   2. Strap Bridging: Combination of flat, taut, steel sheet straps of width and thickness indicated and stud-track solid blocking of width and thickness to match studs. Fasten flat straps to stud flanges and secure solid blocking to stud webs or flanges.
   3. Bar Bridging: Proprietary bridging bars installed according to manufacturer's written instructions.

F. Top Bridging for Single Deflection Track: Install row of horizontal bridging within 12 inches of single deflection track. Install a combination of bridging and stud or stud-track solid blocking of width and thickness matching studs, secured to stud webs or flanges.
   1. Install solid bocking at 96-inch centers.

G. Install miscellaneous framing and connections, including stud kickers, web stiffeners, clip angles, continuous angles, anchors, and fasteners to provide a complete and stable wall-framing system.

3.6 INSTALLATION OF INTERIOR NON-LOAD BEARING WALL FRAMING

A. Install continuous tracks sized to match studs. Align tracks accurately and securely anchor to supporting structure.

B. Fasten both flanges of studs to top and bottom tracks unless otherwise indicated. Space studs as follows:
   1. Stud Spacing: 16 inches.

C. Set studs plumb, except as needed for diagonal bracing or required for non-plumb walls or warped surfaces and similar requirements.

D. Isolate non-load bearing steel framing from building structure to prevent transfer of vertical loads while providing lateral support.
   1. Install single deep-leg deflection tracks and anchor to building structure.
   2. Install double deep-leg deflection tracks and anchor outer track to buiding structure.

E. Install horizontal bridging in wall studs, spaced vertically in rows indicaed on Shop Drawings but not more than 48 inches apart. Fasten at each stud intersection.
   1. Channel Bridging: Cold-rolled steel channel, welded or mechanically fastened, to webs of punched studs.
   2. Strap Bridging: Combination of flat, taut, steel sheet straps of width and thickness indicated and stud-track solid blocking of width and thickness to match studs. Fasten flat straps to stud flanges and secure solid blocking to stud webs or flanges.
   3. Bar Bridging: Proprietary bridging bars installed according to manufacturer's written instructions.

F. Top Bridging for Single Deflection Track: Install row of horizontal bridging within 12 inches of single deflection track. Install a combination of bridging and stud or stud-track solid blocking of width and thickness matching studs, secured to stud webs or flanges.
   1. Install solid blocking at 96-inch centers.

G. Install miscellaneous framing and connections, including stud kickers, web stiffeners, clip angles, continuous angles, anchors, and fasteners to provide a complete and stable wall-framing system.

3.7 INSTALLATION OF JOIST FRAMING

A. Install continuous tracks sized to match studs. Align tracks accurately and securely anchor to supporting structure.
B. Fasten both flanges of studs to top and bottom tracks unless otherwise indicated. Space studs as follows:
   1. Stud Spacing: 16 inches.
C. Set studs plumb except as needed for diagonal bracing or required for non-plumb walls or warped surfaces and similar requirements.
D. Isolate non-load-bearing steel framing from building structure to prevent transfer to vertical loads while providing lateral support.
   1. Install single deep-leg deflection tracks and anchor to building structure.
   2. Install double deep-leg deflection tracks and anchor out track to building structure.
E. Install horizontal bridging in wall studs, spaced vertically in rows indicated on Shop Drawings but no more than 48 inches apart. Fasten at each stud intersection.
   1. Channel Bridging: Cold-rolled steel channel, welded or mechanically fastened, to webs of punched studs.
   2. Strap Bridging: Combination of flat, taut, steel sheet straps of width and thickness indicated and stud-track solid blocking of width and thickness to match studs. Fasten flat straps to stud flanges and secure solid blocking to stud webs or flanges.
   3. Bar Bridging: Proprietary bridging bars installed according to manufacturer's written instructions.
F. Top Bridging for Single Deflection Track: Install row of horizontal bridging within 12 inches of single deflection track. Install a combination of bridging and stud or stud-track solid blocking of width and thickness matching studs, secured to stud webs or flanges.
   1. Install solid bocking at 96-inch centers.
G. Install miscellaneous framing and connections, including stud kickers, web stiffeners, clip angles, continuous angles, anchors, and fasteners to provide a complete and stable wall-framing system.

3.8 INSTALLATION OF INTERIOR NON-LOAD BEARING WALL FRAMING

A. Install perimeter joist track sized to match joists. Align and securely anchor or fasten track to supporting structure at corners, ends, and spacing indicated on Shop Drawings.
B. Install joists bearing on supporting frame, level, straight, and plumb; adjust to final position, brace, and reinforce. Fasten joists to both flanges of joist track.
   1. Install joists over supporting frame with a minimm end bearing of 1-1/2 inches.
   2. reinforce ends and bearing oints of joists with web stiffeners, end clips, joist hangers, steel clip angles, or steel-stud sections.
C. Space joists not more than 2 inches from abutting walls and as follows:
   1. Joist Spacing: 24 inches.
D. Frame openings with built-up joist headers, consisting of jost and joist track or anothr combinaton of connected joists if indicated.
E. Install joist reinforcement at interior supports with single, short length of joist seection located directly over interior support, with lapped joists of equal length to joist reinforcement.
   1. Install web stiffeners to transfer axial loads of walls above.

F. Install bridging intervals indicaed on Shop Drawings.. Fasten at each joist intersection as follows:
   1. Joist-Track Bridging: Joist-track solid bocking of width and thickness indicated, secured to joist webs.
   2. Combination Bridging: Combination of flat, taut, steel sheet straps of width and thickness indicated and joist-track solid blocking of width and thickness indicated. Fasten flat straps to bottom flange and secure solid blocking to joist webs.

G. Secure joists to load-bearing interior walls to prevent lateral movement of bottom flange.

H. Install miscellaneous joist framing and connections, including web stiffeners, closure pieces, clip angles, continuous angles, hold-down angles, anchors, and fasteners to provide a complete and stable joist-framing assembly.

3.9 INSTALLATION TOLERANCES

A. Install cold-formed steel framing level plumb and true-to-line to a maximum allowable tolerance variation of 1/8-inch in 10 feet and as follows:
   1. Space individual framing members no more than plus or minus 1/8-inch from plan location. Cumulative errors are not to exceed minimum fastening requirements of sheathing or other finishing materials.

3.10 REPAIR

A. Galvanizing Repairs: Prepare and repair damaged galvanized coatings on fabricated and installed cold-formed steel framing with galvanized repair paint according to ASTM A780 and manufacturer's written instructions.

3.11 FIELD QUALITY CONTROL

A. Testing: Owner will engage a qualified independent testing and inspecting agency to perform field tests and inspectons and prpare test reports.

B. Field and shop welds will be subject to testing and inspecting.

C. Testing ageny will report test results promptly and in writing to Contractor and Architect.

D. Cold-formed steel framing will be considered defective if it does not pass tests and inspections.

E. Additional testing and inspecting, at Contractor's expense, will be performed tto determine compliance of replaced or additional work with specified requirements.

3.12 PROTECTION

A. Provide final protection and maintain conditions, in a manner acceptale to manufacturer and Installer, that ensure that cold-formed steel framing is without damage or deterioration at time of Substantial Completion.

END OF SECTION

SECTION 06 16 13 – INSULATING SHEATHING (ZIP System R Sheathing)

PART 1 - GENERAL

1.1 SUMMARY

A. Section includes insulating wall sheathing with integral water-resistive barrier and air barrier.
B. Related Requirements:
   1. Division 01 Specification Sections apply to Work of this Section.

1.2 REFERENCES

A. American Society of Mechanical Engineers (ASME): www.asme.org.
   1. ASME B18.6.1 - Wood Screws (Inch Series).
B. ASTM International (ASTM): www.astm.org.
   1. ASTM A153 - Specification for Zinc Coating (Hot-Dip) on Iron and Steel Hardware.
   2. ASTM C1289 - Specification for Faced Rigid Cellular Polyisocyanurate Thermal Insulation Board.
   3. ASTM D779 - Test Method for Water Resistance of Paper, Paperboard, and Other Sheet Materials by the Dry Indicator Method.
   4. ASTM D1621 - Test Method for Compressive Properties Of Rigid Cellular Plastics.
   5. ASTM D2247 - Practice for Testing Water Resistance of Coatings in 100% Relative Humidity.
   6. ASTM E96 - Test Methods for Water Vapor Transmission of Materials.
   7. ASTM E331 - Test Method for Water Penetration of Exterior Windows, Skylights, Doors, and Curtain Walls by Uniform Static Air Pressure Difference.
   8. ASTM E2357 - Test Method for Determining Air Leakage of Air Barrier Assemblies.
   9. ASTM F1667 - Specification for Driven Fasteners: Nails, Spikes, and Staples.
   10. ASTM G154 - Practice for Operating Fluorescent Light Apparatus for UV Exposure of Nonmetallic Materials.
C. US Department of Commerce (DOC): http://gsi.nist.gov/global/index.cfm/L1-5/l2-44/A-355.
   1. DOC PS 2 - Performance Standard for Wood-Based Structural Panels.
D. International Code Council (ICC): www.iccsafe.org.
   1. ICC IBC - International Building Code.
   2. ICC IRC - International Residential Code for One and Two-Family Dwellings.
E. ICC Evaluation Service, Inc. (ICC-ES): www.icc-es.org.
   1. ICC-ES AC12 - Acceptance Criteria For Foam Plastic Insulation.
   2. ICC-ES AC38 - Acceptance Criteria for Water-Resistive Barriers.
   3. ICC-ES AC116 - Acceptance Criteria for Nails and Spikes.
   4. ICC-ES AC148 - Acceptance Criteria For Flexible Flashing Materials.
   5. ICC-ES AC201 - Acceptance Criteria for Staples.
   6. ICC-ES AC269 - Acceptance Criteria for Racking Shear Evaluation of Proprietary Sheathing Materials attached to Light-Frame Wall Construction or Code-Complying Sheathing Attached to Light-Framed Walls with Proprietary Fasteners.

7. ICC-ES AC310 - Acceptance Criteria for Water-Resistive Membranes Factory-bonded to Wood-based Structural Sheathing, Used as Water-Resistive Barriers.
8. ICC-ES ESR-1539 - Power Driven Staples and Nails for Use in Engineered and Non-Engineered Connections.
9. ICC-ES NER-272 - Power Driven Staples and Nails for Use in All Types of Building Construction.

F. Sustainable Forestry Initiative (SFI): www.sfiprogram.org/
   1. SFI 2010 - 2014 Standard.

1.3 ACTION SUBMITTALS

A. Product Data: For each type of sheathing product specified.

1.4 INFORMATIONAL SUBMITTALS

A. Evaluation Reports: From ICC-ES, for wood sheathing and seam tape.
B. Product Certifications: From manufacturer, indicating that sheathing products comply with ICC-ES AC269 and ICC-ES AC310.

1.5 QUALITY ASSURANCE

A. Manufacturer Qualifications: Provide wood products from manufacturer certified by SFI, FSC, or comparable sustainable forestry program acceptable to Architect.
B. Provide wall sheathing products meeting requirements for water-resistive barrier in accordance with ICC-ES AC310.
C. Provide wall sheathing products meeting requirements of ICC-ES AC269.

1.6 DELIVERY, STORAGE, AND HANDLING

A. Comply with manufacturer's written instructions for protection of sheathing products from weather prior to installation.

1.7 WARRANTY

A. Special Manufacturer's Warranty: Manufacturer's standard form in which sheathing manufacturer agrees to repair or replace sheathing products that demonstrate deterioration or failure under normal use due to manufacturing defects within warranty period specified, when installed according to manufacturer's instructions.
   1. Warranty Period for Sheathing Products: 30 years following date of Substantial Completion.
   2. Warranty Conditions: Special warranties exclude deterioration or failure due to structural movement resulting in stresses on sheathing products exceeding manufacturer's written specifications, or due to air or moisture infiltration resulting from cladding failure or mechanical damage.

PART 2 - PRODUCTS

2.1 MANUFACTURERS

A. Basis-of-Design Product: Provide sheathing products manufactured by Huber Engineered Woods LLC, Charlotte NC; Phone: 800.933.9220; Website: www.zipsystem.com.

2.2 PERFORMANCE REQUIREMENTS

A. Air-Barrier Assembly Air Leakage: Less than 0.04 cfm per square foot at 1.57 pound force per square foot, per ASTM E2375.
B. Water-Vapor Permeance, Facer: Minimum 12 perms, ASTM E96.
C. Weather Exposure: Manufacturer warranty applies for maximum allowable exposure period of 180 days.

2.3 MATERIALS

A. Oriented Strand Board: DOC PS 2, made with binder containing no added urea formaldehyde.
B. Rigid Foam Plastic Insulating Board: Rigid polyisocyanurate foam core complying with ASTM C1289 Type II, Class 2, and ICC-ES AC12, with coated glass fiber facers on both sides, with the following characteristics:
   1. Nominal Density: 2.0 pound per cubic foot.
   2. Compressive Strength, ASTM D1621: Not less than 20 psi.
   3. Vapor Permeance, ASTM E96: Less than 1.0 perm.
   4. Edge Configuration: Square finished.

2.4 COMPOSITE INSULATING WALL SHEATHING

A. Composite Insulating Wall Sheathing: Oriented-strand-board Exposure one sheathing 7/16-inch thick, with factory-laminated water-resistive barrier exterior facer, and with rigid foam plastic insulating board laminated to interior face.
   1. Basis-of-Design Product: Provide Huber Engineered Woods LLC; ZIP System R Sheathing.
   2. Span Rating and Performance Category of Sheathing Layer: Not less than 24/16; 7/16 Performance Category.
   3. Thickness: 1 inch.
   4. Thermal Resistivity (R Value): 6.6 degrees F by h by square foot/Btu by inches at 75 degrees F.
   5. Edge Profile: Square edge.
   6. Exterior Facer: Medium-density, phenolic-impregnated polymer-modified sheet material meeting requirements for ASTM D779 Grade D weather-resistive barrier in accordance with ICC AC38 and AC310, with fastener spacing symbols on exterior facer for 16-inch and 24-inch on center spacing, with the following characteristics
      a. Water Resistance of Coatings, ASTM D2247: Pass 14 day exposure test.
      b. Moisture Vapor Transmission, ASTM E96: Not less than 12 perms.
      c. Water Penetration, ASTM E331: Pass at 2.86 pound force per square foot.
      d. Wind Driven Rain, TAS-100: Pass.
      e. Accelerated Weathering, ASTM G154: Pass.

2.5 FASTENERS

A. Fasteners, General: Size and type complying with manufacturer's written instructions for Project conditions and requirements of authorities having jurisdiction.
   1. Corrosion Resistance: Hot-dip zinc coating, ASTM A153.
B. Nails, Brads, and Staples: ICC AC116 and ICC AC201.
C. Power-Driven Fasteners: ICC-ES-1539 or NER-272.
D. Wood Screws: ASME B18.6.1.

2.6 SHEATHING JOINT-AND-PENETRATION TREATMENT MATERIAL

A. Self-Adhering Seam and Flashing Tape: Pressure-sensitive, self-adhering, cold-applied, seam tape consisting of polyolefin film with acrylic adhesive, meeting ICC AC148.
   1. Basis-of-Design Product: Provide Huber Engineered Woods; ZIP System Tape.
   2. Thickness: 0.012-inch

PART 3 - EXECUTION

3.1 EXAMINATION

A. Examine framing spacing and alignment to determine if Work is ready to receive sheathing. Proceed with sheathing Work once conditions meet requirements.

3.2 SHEATHING INSTALLATION

A. Install sheathing panels in accordance with manufacturer's written instructions, requirements of applicable Evaluation Reports, and requirements of authorities having jurisdiction.
B. Air and Moisture Barrier: Coordinate sheathing installation with flashing and joint sealant installation and with adjacent building air and moisture barrier components to provide complete, continuous air- and moisture- barrier.
C. Do not bridge expansion joints; allow joint spacing equal to spacing of structural supports.
D. Install panels with laminated facer to exterior. Stagger end joints of adjacent panel runs.
   1. ICC-ES ESR-1539 OR ICC-NES NER-272 for power-drive fasteners.
   2. IBC: Table 2304.9.1 Fastening Schedule.
E. Apply seam tape at all panel seams, penetrations, and facer defects or cracks to form continuous weathertight surface. Apply tape according to manufacturer's written instructions and requirements of ICC-ES applicable to tape application.

END OF SECTION

SECTION 06 41 16 - PLASTIC-LAMINATE-CLAD ARCHITECTURAL CABINETS

PART 1 - GENERAL

1.1 SUMMARY

A. Section Includes:
   1. Plastic-laminate-clad architectural cabinets.
B. Related Requirements:
   1. Division 01 Specification Sections apply to Work of this Section.

1.2 COORDINATION

A. Hardware Coordination: Distribute copies of approved hardware schedule specified in Section 08 71 00 "Door Hardware" to manufacturer of architectural cabinets; coordinate Shop Drawings and fabrication with hardware requirements.

1.3 ACTION SUBMITTALS

A. Shop Drawings:
   1. Include plans, elevations, sections, and attachment details.
   2. Show locations and sizes of furring, blocking, and hanging strips if used, including concealed blocking and reinforcement specified in other Sections.
   3. Show locations and sizes of cutouts and holes for items installed in plastic-laminate architectural cabinets.
B. Samples for Verification: For the following:
   1. Plastic Laminates: In largest size available by manufacturer, for each type, color, pattern, and surface finish required.

1.4 DELIVERY, STORAGE, AND HANDLING

A. Do not deliver cabinets until painting and similar finish operations that might damage architectural cabinets have been completed in installation areas. Store cabinets in installation areas or in areas where environmental conditions comply with requirements specified in "Field Conditions" Article.

1.5 FIELD CONDITIONS

A. Environmental Limitations: Do not deliver or install cabinets until building is enclosed, wet-work is complete, and HVAC system is operating and maintaining temperature and relative humidity at levels planned for building occupants during the remainder of the construction period.
B. Environmental Limitations: Do not deliver or install cabinets until building is enclosed, wet-work is complete, and HVAC system is operating and maintaining temperature between 60 and 90 degrees F and relative humidity between 25 and 55 percent during the remainder of the construction period.

C. Field Measurements: Where cabinets are indicated to fit to other construction, verify dimensions of other construction by field measurements before fabrication, and indicate measurements on Shop Drawings. Coordinate fabrication schedule with construction progress to avoid delaying the Work.
   1. Locate concealed framing, blocking, and reinforcements that support cabinets by field measurements before being enclosed/concealed by construction, and indicate measurements on Shop Drawings.

PART 2 - PRODUCTS

2.1 PLASTIC-LAMINATE-CLAD ARCHITECTURAL CABINETS

A. Quality Standard: Unless otherwise indicated, comply with the Architectural Woodwork Standards for grades of cabinets indicated for construction, finishes, installation, and other requirements.

2.2 CABINET HARDWARE AND ACCESSORIES

A. General: Provide cabinet hardware and accessory materials associated with architectural cabinets except for items specified in Section 08 71 00 "Door Hardware."
   1. Manufacturers: Subject to compliance with requirements, available manufacturers offering products that may be incorporated into the Work include, but are not limited to, the following:
      a. Accuride International.
      b. Blum, Julius & Co., Inc.
      c. CompX International, Inc.
      d. Grass America Inc.
      e. Hettich America L.P.
      f. Knape & Vogt Manufacturing Company.

B. Frameless Concealed Hinges (European Type): ANSI/BHMA A156.9, B01602, 100 degrees of opening, self-closing.

C. Back-Mounted Pulls: ANSI/BHMA A156.9, B02011.

D. Wire Pulls: Back mounted, solid metal, 5 inches long, 2-1/2 inches deep, and 5/16-inch in diameter.

E. Adjustable Shelf Standards and Supports: ANSI/BHMA A156.9, B04071; with shelf rests, B04081.

F. Shelf Rests: ANSI/BHMA A156.9, B04013; plastic two-pin plastic with shelf hold-down clip.

G. Drawer Slides: ANSI/BHMA A156.9.
   1. Grade 1 and Grade 2: Side mounted and extending under bottom edge of drawer.
      a. Type: Partial extension.
      b. Material: Zinc-plated steel with polymer rollers.
   2. For drawers more than 6 inches high or more than 24 inches wide, provide Grade 1HD-200.

H. Door and Drawer Silencers: ANSI/BHMA A156.16, L03011.

I. Exposed Hardware Finishes: For exposed hardware, provide finish that complies with ANSI/BHMA A156.18 for ANSI/BHMA finish number indicated.
   1. Matte Black: US19; ANSI/BHMA 622 for brass or bronze base.
J. For concealed hardware, provide manufacturer's standard finish that complies with product class requirements in ANSI/BHMA A156.9.

2.3 FABRICATION

A. Fabricate architectural cabinets to dimensions, profiles, and details indicated.
B. Complete fabrication, including assembly and hardware application, to maximum extent possible before shipment to Project Site. Disassemble components only as necessary for shipment and installation. Where necessary for fitting at Site, provide ample allowance for scribing, trimming, and fitting.
   1. Notify Architect 7 days in advance of the dates and times architectural cabinet fabrication will be complete.
   2. Trial fit assemblies at manufacturer's shop that cannot be shipped completely assembled. Install dowels, screws, bolted connectors, and other fastening devices that can be removed after trial fitting. Verify that various parts fit as intended and check measurements of assemblies against field measurements before disassembling for shipment.
C. Shop-cut openings to maximum extent possible to receive hardware, appliances, electrical work, and similar items. Locate openings accurately and use templates or roughing-in diagrams to produce accurately sized and shaped openings. Sand edges of cutouts to remove splinters and burrs.
D. Install glass to comply with applicable requirements in Section 08 80 00 "Glazing" and in GANA's "Glazing Manual."
   1. For glass in frames, secure glass with removable stops.
   2. For exposed glass edges, polish and grind smooth.

PART 3 - EXECUTION

3.1 PREPARATION

A. Before installation, condition cabinets to humidity conditions in installation areas for not less than 72 hours.

3.2 INSTALLATION

A. Assemble cabinets and complete fabrication at Project Site to extent that it was not completed in the shop.
B. Anchor cabinets to anchors or blocking built in or directly attached to substrates. Secure with wafer-head cabinet installation screws.
C. Install cabinets level, plumb, and true in line to a tolerance of 1/8-inch in 96 inches using concealed shims.
   1. Scribe and cut cabinets to fit adjoining Work, refinish cut surfaces, and repair damaged finish at cuts.

2. Install cabinets without distortion so doors and drawers fit openings and are accurately aligned. Adjust hardware to center doors and drawers in openings and to provide unencumbered operation. Complete installation of hardware and accessory items as indicated.

3.3 ADJUSTING AND CLEANING

A. Repair damaged and defective cabinets, where possible, to eliminate functional and visual defects. Where not possible to repair, replace architectural cabinets. Adjust joinery for uniform appearance.
B. Clean, lubricate, and adjust hardware.
C. Clean cabinets on exposed and semi-exposed surfaces.

END OF SECTION

SECTION 07 21 00 - THERMAL INSULATION

PART 1 - GENERAL

1.1 SUMMARY

A. Section Includes:
   1. Glass-fiber blanket insulation.

B. Related Requirements:
   1. Division 01 Specification Sections apply to Work of this Section.
   2. Section 06 16 13 "Insulating Sheathing" for foam-plastic board sheathing installed directly over wood or steel framing.
   3. Section 13 34 19 "Metal Building Systems" for Glass-fiber blanket insulation installed within metal building system.
   4. Section 09 29 00 "Gypsum Board" for sound attenuation blanket used as acoustic insulation.

1.2 ACTION SUBMITTALS

A. Product Data: For the following:
   1. Glass-fiber blanket insulation.

1.3 INFORMATIONAL SUBMITTALS

A. Installer's Certification: Listing type, manufacturer, and R-value of insulation installed in each element of the building thermal envelope.
   1. Sign, date, and post the certification in a conspicuous location on Project Site.

B. Product Test Reports: For each product, for tests performed by a qualified testing agency.

C. Research Reports: For foam-plastic insulation, from ICC-ES.

1.4 DELIVERY, STORAGE, AND HANDLING

A. Protect insulation materials from physical damage and from deterioration due to moisture, soiling, and other sources. Store inside and in a dry location. Comply with manufacturer's written instructions for handling, storing, and protecting during installation.

PART 2 - PRODUCTS

2.1 GLASS-FIBER BLANKET INSULATION

A. Glass-Fiber Blanket Insulation, Polypropylene-Scrim-Kraft Faced : ASTM C665, Type II (nonreflective faced), Class A (faced surface with a flame-spread index of 25 or less); Category 1 (membrane is a vapor barrier).

1. Manufacturers: Subject to compliance with requirements, provide products by one of the following:
   a. CertainTeed Corporation.
   b. CertainTeed Insulation.
   c. Johns Manville; a Berkshire Hathaway company.
   d. Knauf Insulation.
   e. Owens Corning.
2. Labeling: Provide identification of mark indicating R-value of each piece of insulation 12 inches and wider in width.

2.2 ACCESSORIES

A. Insulation for Miscellaneous Voids:

1. Glass-Fiber Insulation: ASTM C764, Type II, loose fill; with maximum flame-spread and smoke-developed indexes of 5, per ASTM E84.

PART 3 - EXECUTION

3.1 PREPARATION

A. Clean substrates of substances that are harmful to insulation, including removing projections capable of puncturing insulation or vapor retarders, or that interfere with insulation attachment.

3.2 INSTALLATION, GENERAL

A. Comply with insulation manufacturer's written instructions applicable to products and applications.
B. Install insulation that is undamaged, dry, and unsoiled and that has not been left exposed to ice, rain, or snow at any time.
C. Install insulation with manufacturer's R-value label exposed after insulation is installed.
D. Extend insulation to envelop entire area to be insulated. Fit tightly around obstructions and fill voids with insulation. Remove projections that interfere with placement.
E. Provide sizes to fit applications and selected from manufacturer's standard thicknesses, widths, and lengths. Apply single layer of insulation units unless multiple layers are otherwise shown or required to make up total thickness or to achieve R-value.

3.3 INSTALLATION OF INSULATION IN FRAMED CONSTRUCTION

A. Blanket Insulation: Install in cavities formed by framing members according to the following requirements:
   1. Use insulation widths and lengths that fill the cavities formed by framing members. If more than one length is required to fill the cavities, provide lengths that will produce a snug fit between ends.
   2. Place insulation in cavities formed by framing members to produce a friction fit between edges of insulation and adjoining framing members.
   3. Maintain 3-inch clearance of insulation around recessed lighting fixtures not rated for or protected from contact with insulation.
   4. For metal-framed wall cavities where cavity heights exceed 96 inches, support unfaced blankets mechanically and support faced blankets by taping flanges of insulation to flanges of metal studs.
   5. Vapor-Retarder-Faced Blankets: Tape joints and ruptures in vapor-retarder facings, and seal each continuous area of insulation to ensure airtight installation.
      a. Exterior Walls: Set units with facing placed toward exterior of construction.
      b. Interior Walls: Set units with facing placed toward areas of high humidity.

B. Miscellaneous Voids: Install insulation in miscellaneous voids and cavity spaces where required to prevent gaps in insulation using the following materials:
   1. Glass-Fiber Insulation: Compact to approximately 40 percent of normal maximum volume equaling a density of approximately 2.5 pounds per cubic feet.

3.4 PROTECTION

A. Protect installed insulation from damage due to harmful weather exposures, physical abuse, and other causes.

B. Provide temporary coverings or enclosures where insulation is subject to abuse and cannot be concealed and protected by permanent construction immediately after installation.

END OF SECTION

SECTION 07 62 00 - SHEET METAL FLASHING AND TRIM

PART 1 - GENERAL

1.1 SUMMARY

A. Section Includes:
   1. Formed wall sheet metal fabrications.

B. Related Requirements:
   1. Division 01 Specification Sections apply to Work of this Section.
   2. Section 13 34 19 "Metal Building Systems" for sheet metal flashing and trim integral with metal wall panels.

1.2 COORDINATION

A. Coordinate sheet metal flashing and trim layout and seams with sizes and locations of penetrations to be flashed, and joints and seams in adjacent materials.

B. Coordinate sheet metal flashing and trim installation with adjoining roofing and wall materials, joints, and seams to provide leakproof, secure, and noncorrosive installation.

1.3 ACTION SUBMITTALS

A. Product Data: For each of the following
   1. Underlayment materials.
   2. Elastomeric sealant.
   3. Butyl sealant.

1.4 CLOSEOUT SUBMITTALS

A. Special warranty.

1.5 DELIVERY, STORAGE, AND HANDLING

A. Do not store sheet metal flashing and trim materials in contact with other materials that might cause staining, denting, or other surface damage.
   1. Store sheet metal flashing and trim materials away from uncured concrete and masonry.
   2. Protect stored sheet metal flashing and trim from contact with water.

B. Protect strippable protective covering on sheet metal flashing and trim from exposure to sunlight and high humidity, except to extent necessary for period of sheet metal flashing and trim installation.

PART 2 - PRODUCTS

2.1 PERFORMANCE REQUIREMENTS

A. Sheet metal flashing and trim assemblies, including cleats, anchors, and fasteners, shall withstand wind loads, structural movement, thermally induced movement, and exposure to weather without failure due to defective manufacture, fabrication, installation, or other defects in construction. Completed sheet metal flashing and trim shall not rattle, leak, or loosen, and shall remain watertight.

B. Sheet Metal Standard for Flashing and Trim: Comply with SMACNA's "Architectural Sheet Metal Manual" requirements for dimensions and profiles shown unless more stringent requirements are indicated.

C. Thermal Movements: Allow for thermal movements from ambient and surface temperature changes to prevent buckling, opening of joints, overstressing of components, failure of joint sealants, failure of connections, and other detrimental effects. Base calculations on surface temperatures of materials due to both solar heat gain and nighttime-sky heat loss.

2.2 SHEET METALS

A. Protect mechanical and other finishes on exposed surfaces from damage by applying strippable, temporary protective film before shipping.

B. Stainless Steel Sheet: ASTM A240, Type 316, dead soft, fully annealed; with smooth, flat surface.

2.3 MISCELLANEOUS MATERIALS

A. Provide materials and types of fasteners, protective coatings, sealants, and other miscellaneous items as required for complete sheet metal flashing and trim installation and as recommended by manufacturer of primary sheet metal unless otherwise indicated.

B. Fasteners: Wood screws, annular threaded nails, self-tapping screws, self-locking rivets and bolts, and other suitable fasteners designed to withstand design loads and recommended by manufacturer of primary sheet metal.

1. Fasteners for Stainless Steel Sheet: Series 300 stainless steel.

C. Bituminous Coating: Cold-applied asphalt emulsion in accordance with ASTM D1187.

2.4 WALL SHEET METAL FABRICATIONS

A. Through-Wall Flashing: Fabricate continuous flashings in minimum 96-inch-long, but not exceeding 12-foot-long, sections, under copings, and at shelf angles. Fabricate discontinuous lintel, sill, and similar flashings to extend 6 inches beyond each side of wall openings; and form with 2-inch-high, end dams. Fabricate from the following materials:

1. Stainless Steel: 0.0156-inch thick.

B. Opening Flashings in Frame Construction: Fabricate head, sill, jamb, and similar flashings to extend beyond wall openings. Form head and sill flashing with 2-inch-high, end dams. Fabricate from the following materials:

1. Stainless Steel: 0.0156-inch thick.

C. Wall Expansion-Joint Cover: Fabricate from the following materials:

1. Stainless Steel: 0.0188-inch thick.

PART 3 - EXECUTION

3.1 EXAMINATION

A. Examine substrates, areas, and conditions, with installer present, for compliance with requirements for installation tolerances, substrate, and other conditions affecting performance of the Work.
   1. Verify compliance with requirements for installation tolerances of substrates.
   2. Verify that substrate is sound, dry, smooth, clean, sloped for drainage, and securely anchored.
   3. Verify that air- or water-resistant barriers have been installed over sheathing or backing substrate to prevent air infiltration or water penetration.

B. Proceed with installation only after unsatisfactory conditions have been corrected.

3.2 INSTALLATION, GENERAL

A. Install sheet metal flashing and trim to comply with details indicated and recommendations of cited sheet metal standard that apply to installation characteristics required unless otherwise indicated on Drawings.
   1. Install fasteners, protective coatings, separators, sealants, and other miscellaneous items as required to complete sheet metal flashing and trim system.
   2. Install sheet metal flashing and trim true to line, levels, and slopes. Provide uniform, neat seams with minimum exposure of sealant.
   3. Anchor sheet metal flashing and trim and other components of the Work securely in place, with provisions for thermal and structural movement.
   4. Install sheet metal flashing and trim to fit substrates and to result in watertight performance.
   5. Space individual cleats not more than 12 inches apart. Attach each cleat with at least two fasteners. Bend tabs over fasteners.
   6. Install exposed sheet metal flashing and trim with limited oil-canning, and free of buckling and tool marks.
   7. Do not field cut sheet metal flashing and trim by torch.

B. Metal Protection: Where dissimilar metals contact each other, or where metal contacts pressure-treated wood or other corrosive substrates, protect against galvanic action or corrosion by painting contact surfaces with bituminous coating or by other permanent separation as recommended by sheet metal manufacturer or cited sheet metal standard.
   1. Coat concealed side of stainless steel sheet metal flashing and trim with bituminous coating where flashing and trim contact wood, ferrous metal, or cementitious construction.
   2. Underlayment: Where installing sheet metal flashing and trim directly on cementitious or wood substrates, install underlayment and cover with slip sheet.

C. Expansion Provisions: Provide for thermal expansion of exposed flashing and trim.
   1. Space movement joints at maximum of 10 feet with no joints within 24 inches of corner or intersection.
   2. Use lapped expansion joints only where indicated on Drawings.

D. Fasteners: Use fastener sizes that penetrate substrate not less than recommended by fastener manufacturer to achieve maximum pull-out resistance.

E. Conceal fasteners and expansion provisions where possible in exposed Work and locate to minimize possibility of leakage. Cover and seal fasteners and anchors as required for a tight installation.
F. Seal joints as required for watertight construction.
   1. Use sealant-filled joints unless otherwise indicated.

3.3 INSTALLATION OF WALL FLASHINGS

A. Install sheet metal wall flashing to intercept and exclude penetrating moisture in accordance with cited sheet metal standard unless otherwise indicated. Coordinate installation of wall flashing with installation of wall-opening components such as windows, doors, and louvers.
B. Opening Flashings in Frame Construction: Install continuous head, sill, jamb, and similar flashings to extend beyond wall openings.

3.4 CLEANING

A. Clean exposed metal surfaces of substances that interfere with uniform oxidation and weathering.
B. Clean off excess sealants.

3.5 PROTECTION

A. Remove temporary protective coverings and strippable films as sheet metal flashing and trim are installed unless otherwise indicated in manufacturer's written installation instructions.
B. On completion of sheet metal flashing and trim installation, remove unused materials and clean finished surfaces as recommended in writing by sheet metal flashing and trim manufacturer.
C. Maintain sheet metal flashing and trim in clean condition during construction.
D. Replace sheet metal flashing and trim that have been damaged or that have deteriorated beyond successful repair by finish touchup or similar minor repair procedures, as determined by Architect.

END OF SECTION

SECTION 08 11 13 - HOLLOW METAL DOORS AND FRAMES

PART 1 - GENERAL

1.1 SUMMARY

A. Section includes hollow-metal Work.
B. Related Requirements:
   1. Division 01 Specification Sections apply to Work of this Section.
   2. Section 08 71 00 "Door Hardware" for door hardware for hollow-metal doors.

1.2 DEFINITIONS

A. Minimum Thickness: Minimum thickness of base metal without coatings according to NAAMM-HMMA 803 or SDI A250.8.

1.3 COORDINATION

A. Coordinate anchorage installation for hollow-metal frames. Furnish setting Drawings, templates, and directions for installing anchorages, including sleeves, concrete inserts, anchor bolts, and items with integral anchors. Deliver such items to Project Site in time for installation.

1.4 ACTION SUBMITTALS

A. Product Data: For each type of product.
   1. Include construction details, material descriptions, core descriptions, and finishes.
B. Shop Drawings: Include the following:
   1. Elevations of each door type.
   2. Details of doors, including vertical- and horizontal-edge details and metal thicknesses.
   3. Frame details for each frame type, including dimensioned profiles and metal thicknesses.
   4. Locations of reinforcement and preparations for hardware.
   5. Details of each different wall opening condition.
   6. Details of anchorages, joints, field splices, and connections.
   7. Details of accessories.
   8. Details of moldings, removable stops, and glazing.
   9. Details of conduit and preparations for power, signal, and control systems.
C. Schedule: Provide a schedule of hollow-metal Work prepared by or under the supervision of supplier, using same reference numbers for details and openings as those on Drawings. Coordinate with final Door Hardware Schedule.

1.5 DELIVERY, STORAGE, AND HANDLING

A. Deliver hollow-metal Work palletized, packaged, or crated to provide protection during transit and Project-Site storage. Do not use non-vented plastic.
   1. Provide additional protection to prevent damage to factory-finished units.

B. Store hollow-metal work vertically under cover at Project Site with head up. Place on minimum 4-inch-high wood blocking. Provide minimum 1/4-inch space between each stacked door to permit air circulation.

PART 2 - PRODUCTS

2.1 MANUFACTURERS

A. Source Limitations: Obtain hollow-metal Work from single source from single manufacturer.

2.2 INTERIOR DOORS AND FRAMES

A. Construct interior doors and frames to comply with the standards indicated for materials, fabrication, hardware locations, hardware reinforcement, tolerances, and clearances, and as specified.

B. Heavy-Duty Doors and Frames: SDI A250.8, Level 2 at locations indicated in the Door and Frame Schedule.
   1. Physical Performance: Level B according to SDI A250.4.
   2. Doors:
      a. Type: As indicated in the Door and Frame Schedule.
      b. Thickness: 1-3/4 inches.
      c. Core: Manufacturer's standard kraft-paper honeycomb, polystyrene, polyurethane, polyisocyanurate, mineral-board, or vertical steel-stiffener core at manufacturer's discretion.
   3. Frames:
      a. Construction: Face welded.
   4. Exposed Finish: Prime.

2.3 EXTERIOR HOLLOW-METAL DOORS AND FRAMES

A. Construct exterior doors and frames to comply with the standards indicated for materials, fabrication, hardware locations, hardware reinforcement, tolerances, and clearances, and as specified.

B. Extra-Heavy-Duty Doors and Frames: SDI A250.8, Level 3.
   1. Physical Performance: Level A according to SDI A250.4.
   2. Doors:
      a. Type: As indicated in the Door and Frame Schedule.
      b. Thickness: 1-3/4 inches.
      c. Face: Metallic-coated steel sheet, minimum thickness of 0.053-inch, with minimum A40 coating.
   3. Frames:
      a. Construction: Face welded.
   4. Exposed Finish: Prime.

2.4 BORROWED LITES

A. Hollow-metal frames of uncoated steel sheet, minimum thickness of 0.053-inch.

B. Construction: Face welded.

2.5 FRAME ANCHORS

A. Jamb Anchors:
   1. Masonry Type: Adjustable strap-and-stirrup or T-shaped anchors to suit frame size, not less than 0.042-inch thick, with corrugated or perforated straps not less than 2 inches wide by 10 inches long; or wire anchors not less than 0.177-inch thick.
   2. Stud-Wall Type: Designed to engage stud, welded to back of frames; not less than 0.042-inch thick.

B. Floor Anchors: Formed from same material as frames, minimum thickness of 0.042-inch, and as follows:
   1. Monolithic Concrete Slabs: Clip-type anchors, with two holes to receive fasteners.

2.6 MATERIALS

A. Hot-Rolled Steel Sheet: ASTM A1011, Commercial Steel (CS), Type B; free of scale, pitting, or surface defects; pickled and oiled.

B. Frame Anchors: ASTM A879, Commercial Steel (CS), 04Z coating designation; mill phosphatized.

C. Inserts, Bolts, and Fasteners: Hot-dip galvanized according to ASTM A153.

D. Grout: ASTM C476, except with a maximum slump of 4 inches, as measured according to ASTM C143.

E. Mineral-Fiber Insulation: ASTM C665, Type I (blankets without membrane facing); consisting of fibers manufactured from slag or rock wool; with maximum flame-spread and smoke-developed indexes of 25 and 50, respectively; passing ASTM E136 for combustion characteristics.

F. Glazing: Comply with requirements in Section 08 80 00 "Glazing."

G. Bituminous Coating: Cold-applied asphalt mastic, compounded for 15 mil dry film thickness per coat. Provide inert-type noncorrosive compound free of asbestos fibers, sulfur components, and other deleterious impurities.

2.7 FABRICATION

A. Fabricate hollow-metal work to be rigid and free of defects, warp, or buckle. Accurately form metal to required sizes and profiles, with minimum radius for metal thickness. Where practical, fit and assemble units in manufacturer's plant. To ensure proper assembly at Project Site, clearly identify Work that cannot be permanently factory assembled before shipment.

B. Hollow-Metal Doors:
   1. Steel-Stiffened Door Cores: Provide minimum thickness 0.026-inch, steel vertical stiffeners of same material as face sheets extending full-door height, with vertical webs spaced not more than 6 inches apart. Spot weld to face sheets no more than 5 inches on center. Fill spaces between stiffeners with glass- or mineral-fiber insulation.
   2. Vertical Edges for Single-Acting Doors: Provide beveled or square edges at manufacturer's discretion.
   3. Bottom Edge Closures: Close bottom edges of doors with end closures or channels of same material as face sheets.
   4. Exterior Doors: Provide weep-hole openings in bottoms of exterior doors to permit moisture to escape. Seal joints in top edges of doors against water penetration.

C. Hollow-Metal Frames: Where frames are fabricated in sections due to shipping or handling limitations, provide alignment plates or angles at each joint, fabricated of same thickness metal as frames.
   1. Frames: Provide closed tubular members with no visible face seams or joints, fabricated from same material as door frame. Fasten members at crossings and to jambs by butt welding.
   2. Provide countersunk, flat- or oval-head exposed screws and bolts for exposed fasteners unless otherwise indicated.
   3. Grout Guards: Weld guards to frame at back of hardware mortises in frames to be grouted.
   4. Floor Anchors: Weld anchors to bottoms of jambs with at least four spot welds per anchor; however, for slip-on drywall frames, provide anchor clips or countersunk holes at bottoms of jambs.
   5. Jamb Anchors: Provide number and spacing of anchors as follows:
      a. Stud-Wall Type: Locate anchors not more than 18 inches from top and bottom of frame. Space anchors not more than 32 inches on center and as follows:
         1) Three anchors per jamb up to 60 inches high.
         2) Four anchors per jamb from 60 to 90 inches high.
         3) Five anchors per jamb from 90 to 96 inches high.
         4) Five anchors per jamb plus one additional anchor per jamb for each 24 inches or fraction thereof above 96 inches high.
      b. Postinstalled Expansion Type: Locate anchors not more than 6 inches from top and bottom of frame. Space anchors not more than 26 inches on center.
   6. Head Anchors: Two anchors per head for frames more than 42 inches wide and mounted in metal-stud partitions.
   7. Door Silencers: Drill stops to receive door silencers where specified in Section 08 71 00 "Door Hardware." Keep holes clear during construction.

D. Fabricate concealed stiffeners and edge channels from either cold- or hot-rolled steel sheet.

E. Hardware Preparation: Factory prepare hollow-metal work to receive templated mortised hardware; include cutouts, reinforcement, mortising, drilling, and tapping according to SDI A250.6, the Door Hardware Schedule, and templates.
   1. Reinforce doors and frames to receive non-templated, mortised, and surface-mounted door hardware.
   2. Comply with applicable requirements in SDI A250.6 and BHMA A156.115 for preparation of hollow-metal work for hardware.

2.8 STEEL FINISHES

A. Prime Finish: Clean, pretreat, and apply manufacturer's standard primer.
   1. Shop Primer: Manufacturer's standard, fast-curing, lead- and chromate-free primer complying with SDI A250.10; recommended by primer manufacturer for substrate; compatible with substrate and field-applied coatings despite prolonged exposure.

PART 3 - EXECUTION

3.1 EXAMINATION

A. Examine substrates, areas, and conditions, with Installer present, for compliance with requirements for installation tolerances and other conditions affecting performance of the Work.
B. Examine roughing-in for embedded and built-in anchors to verify actual locations before frame installation.
C. Prepare written report, endorsed by Installer, listing conditions detrimental to performance of the Work.
D. Proceed with installation only after unsatisfactory conditions have been corrected.

3.2 PREPARATION

A. Drill and tap doors and frames to receive non-templated, mortised, and surface-mounted door hardware.

3.3 INSTALLATION

A. General: Install hollow-metal work plumb, rigid, properly aligned, and securely fastened in place. Comply with Drawings and manufacturer's written instructions.
B. Hollow-Metal Frames: Install hollow-metal frames for doors, transoms, sidelites, borrowed lites, and other openings, of size and profile indicated. Comply with SDI A250.11 or NAAMM-HMMA 840 as required by standards specified.
    1. Set frames accurately in position; plumbed, aligned, and braced securely until permanent anchors are set. After wall construction is complete, remove temporary braces, leaving surfaces smooth and undamaged.
        a. Where frames are fabricated in sections because of shipping or handling limitations, field splice at approved locations by welding face joint continuously; grind, fill, dress, and make splice smooth, flush, and invisible on exposed faces.
        b. Install frames with removable stops located on secure side of opening.
        c. Install door silencers in frames before grouting.
        d. Remove temporary braces necessary for installation only after frames have been properly set and secured.
        e. Check plumb, square, and twist of frames as walls are constructed. Shim as necessary to comply with installation tolerances.
        f. Field apply bituminous coating to backs of frames that will be filled with grout containing antifreezing agents.
    2. Floor Anchors: Provide floor anchors for each jamb and mullion that extends to floor, and secure with postinstalled expansion anchors.
    3. Metal-Stud Partitions: Solidly pack mineral-fiber insulation inside frames.
    4. In-Place Concrete or Masonry Construction: Secure frames in place with postinstalled expansion anchors. Countersink anchors, and fill and make smooth, flush, and invisible on exposed faces.

5. Installation Tolerances: Adjust hollow-metal door frames for squareness, alignment, twist, and plumb to the following tolerances:
   a. Squareness: Plus or minus 1/16-inch, measured at door rabbet on a line 90 degrees from jamb perpendicular to frame head.
   b. Alignment: Plus or minus 1/16-inch, measured at jambs on a horizontal line parallel to plane of wall.
   c. Twist: Plus or minus 1/16-inch, measured at opposite face corners of jambs on parallel lines, and perpendicular to plane of wall.
   d. Plumbness: Plus or minus 1/16-inch, measured at jambs at floor.

C. Hollow-Metal Doors: Fit hollow-metal doors accurately in frames, within clearances specified below. Shim as necessary.
   1. Non-Fire-Rated Steel Doors:
      a. Between Door and Frame Jambs and Head: 1/8-inch plus or minus 1/32-inch.
      b. Between Edges of Pairs of Doors: 1/8-inch to 1/4-inch plus or minus 1/32-inch.
      c. At Bottom of Door: 3/4-inch plus or minus 1/32-inch.
      d. Between Door Face and Stop: 1/16-inch to 1/8-inch plus or minus 1/32-inch.

3.4 ADJUSTING AND CLEANING

A. Final Adjustments: Check and readjust operating hardware items immediately before final inspection. Leave Work in complete and proper operating condition. Remove and replace defective Work, including hollow-metal Work that is warped, bowed, or otherwise unacceptable.

B. Remove grout and other bonding material from hollow-metal Work immediately after installation.

C. Prime-Coat Touchup: Immediately after erection, sand smooth rusted or damaged areas of prime coat and apply touchup of compatible air-drying, rust-inhibitive primer.

D. Metallic-Coated Surface Touchup: Clean abraded areas and repair with galvanizing repair paint according to manufacturer's written instructions.

E. Touchup Painting: Cleaning and touchup painting of abraded areas of paint are specified in painting Sections.

END OF SECTION

SECTION 08 33 23 - OVERHEAD COILING DOORS

PART 1 - GENERAL

1.1 SUMMARY

A. Related Requirements:
   1. Division 01 Specification Sections apply to Work of this Section.

1.2 ACTION SUBMITTALS

A. Product Data: For each type and size of overhead coiling door and accessory.
   1. Include construction details, material descriptions, dimensions of individual components, profiles for slats, and finishes.

B. Shop Drawings: For each installation and for special components not dimensioned or detailed in manufacturer's product data.
   1. Include points of attachment and their corresponding static and dynamic loads imposed on structure.
   2. Show locations of controls, locking devices, detectors or replaceable fusible links, and other accessories.
   3. Include diagrams for power, signal, and control wiring.

1.3 CLOSEOUT SUBMITTALS

A. Maintenance data.

1.4 QUALITY ASSURANCE

A. Installer Qualifications: An entity that employs installers and supervisors who are trained and approved by manufacturer for both installation and maintenance of units required for this Project.

1.5 WARRANTY

A. Special Warranty: Manufacturer agrees to repair or replace components of doors that fail in materials or workmanship within specified warranty period.
   1. Warranty Period: 2 years from date of Substantial Completion.

PART 2 - PRODUCTS

2.1 DOOR ASSEMBLY

A. Door: Overhead coiling door formed with curtain of interlocking metal slats.
   1. Manufacturers: Subject to compliance with requirements, available manufacturers offering products that may be incorporated into the Work include, but are not limited to, the following:
      a. Overhead Door Corporation.
      b. Raynor Garage Doors.
      c. Windsor Door.

B. Operation Cycles: Door components and operators capable of operating for not less than 20,000.
C. Door Curtain Material: Galvanized steel.
D. Door Curtain Slats: Curved profile slats of center-to-center height.
E. Hood: Galvanized steel.
F. Locking Devices: Equip door with slide bolt for padlock and chain lock keeper.
G. Electric Door Operator:
   1. Usage Classification: Medium duty, up to 12 cycles per hour and up to 50 cycles per day.
   2. Safety: Listed according to UL 325 by a qualified testing agency for commercial or industrial use.
   3. Motor Exposure: Interior.
   4. Motor Electrical Characteristics:
      a. Horsepower: 1/2 hp.
      b. Voltage: 115 V ac, single phase, 60 Hz.
   5. Emergency Manual Operation: Crank type.
   6. Control Station(s): Interior mounted.
H. Door Finish:
   1. Baked-Enamel or Powder-Coated Finish: Color as selected by Architect from manufacturer's full range.
   2. Interior Curtain-Slat Facing: Match finish of exterior curtain-slat face.

2.2 MATERIALS, GENERAL

A. Electrical Components, Devices, and Accessories: Listed and labeled as defined in NFPA 70, by a qualified testing agency, and marked for intended location and application.

2.3 HOODS

A. General: Form sheet metal hood to entirely enclose coiled curtain and operating mechanism at opening head. Contour to fit end brackets to which hood is attached. Roll and reinforce top and bottom edges for stiffness. Form closed ends for surface-mounted hoods and fascia for any portion of between-jamb mounting that projects beyond wall face. Equip hood with intermediate support brackets as required to prevent sagging.
   1. Include automatic drop baffle on fire-rated doors to guard against passage of smoke or flame.
   2. Exterior-Mounted Doors: Fabricate hood to act as weather protection and with a perimeter sealant-joint-bead profile for applying joint sealant.

2.4 LOCKING DEVICES

A. Slide Bolt: Fabricate with side-locking bolts to engage through slots in tracks for locking by padlock, located on both left and right jamb sides, operable from coil side.
B. Safety Interlock Switch: Equip power-operated doors with safety interlock switch to disengage power supply when door is locked.

2.5 MANUAL DOOR OPERATORS

A. General: Equip door with manual door operator by door manufacturer.
B. Crank Operator: Consisting of crank and crank gearbox, steel crank drive shaft, and gear-reduction unit, of type indicated. Size gears to require not more than force to turn crank. Fabricate gearbox to be oiltight and to completely enclose operating mechanism. Provide manufacturer's standard crank-locking device.

2.6 ELECTRIC DOOR OPERATORS

A. General: Electric door operator assembly of size and capacity recommended and provided by door manufacturer for door and operation-cycles requirement specified, with electric motor and factory-prewired motor controls, starter, gear-reduction unit, solenoid-operated brake, clutch, control stations, control devices, integral gearing for locking door, and accessories required for proper operation.
   1. Comply with NFPA 70.
   2. Control equipment complying with NEMA ICS 1, NEMA ICS 2, and NEMA ICS 6, with NFPA 70 Class 2 control circuit, maximum 24-V ac or dc.
B. Motors: Reversible-type motor with controller (disconnect switch) for motor exposure indicated for each door assembly.
C. Control Station: Three-button control station in fixed location with momentary-contact push-button controls labeled "Open" and "Stop" and sustained- or constant-pressure push-button control labeled "Close."
D. Emergency Manual Operation: Equip each electrically powered door with capability for emergency manual operation. Design manual mechanism so required force for door operation does not exceed 30 pound force.
E. Emergency Operation Disconnect Device: Equip operator with hand-operated disconnect mechanism for automatically engaging manual operator and releasing brake for emergency manual operation while disconnecting motor without affecting timing of limit switch. Mount mechanism so it is accessible from floor level. Include interlock device to automatically prevent motor from operating when emergency operator is engaged.

PART 3 - EXECUTION

3.1 INSTALLATION, GENERAL

A. Install overhead coiling doors and operating equipment complete with necessary hardware, anchors, inserts, hangers, and equipment supports; according to manufacturer's written instructions and as specified.
B. Power-Operated Doors: Install automatic garage doors openers according to UL 325.

END OF SECTION

SECTION 08 51 13 - ALUMINUM WINDOWS

PART 1 - GENERAL

1.1 SUMMARY

A. Section includes aluminum windows for exterior locations.
B. Related Requirements:
   1. Division 01 Specification Sections apply to Work of this Section.

1.2 ACTION SUBMITTALS

A. Product Data: For each type of product.
B. Shop Drawings: Include plans, elevations, sections, hardware, accessories, insect screens, operational clearances, and details of installation, including anchor, flashing, and sealant installation.
C. Samples: For each exposed product and for each color specified.

1.3 WARRANTY

A. Manufacturer's Warranty: Manufacturer agrees to repair or replace aluminum windows that fail in materials or workmanship within specified warranty period.

PART 2 - PRODUCTS

2.1 ALUMINUM WINDOWS

A. Manufacturers: Subject to compliance with requirements, available manufacturers offering products that may be incorporated into the Work include, but are not limited to, the following:
   1. EFCO Corporation.
   2. Kawneer North America, an Arconic company.
   3. YKK AP America Inc.
B. Frames and Sashes: Aluminum extrusions complying with AAMA/WDMA/CSA 101/I.S.2/A440.
   1. Thermally Improved Construction: Fabricate frames, sashes, and muntins with an integral, concealed, low-conductance thermal barrier located between exterior materials and window members exposed on interior side in a manner that eliminates direct metal-to-metal contact.
C. Glazing System: Manufacturer's standard factory-glazing system that produces weathertight seal.
D. Weather Stripping: Provide full-perimeter weather stripping for each operable sash unless otherwise indicated.

2.2 FABRICATION

A. Fabricate aluminum windows in sizes indicated. Include a complete system for assembling components and anchoring windows.
B. Glaze aluminum windows in the factory.

C. Weather strip each operable sash to provide weathertight installation.
D. Provide water-shed members above side-hinged sashes and similar lines of natural water penetration.
E. Mullions: Provide mullions and cover plates, matching window units, complete with anchors for support to structure and installation of window units. Allow for erection tolerances and provide for movement of window units due to thermal expansion and building deflections. Provide mullions and cover plates capable of withstanding design wind loads of window units.
F. Complete fabrication, assembly, finishing, hardware application, and other Work in the factory to greatest extent possible. Disassemble components only as necessary for shipment and installation.

2.3 ALUMINUM FINISHES

A. Finish designations prefixed by AA comply with the system established by the Aluminum Association for designating aluminum finishes.
B. Class II, Color Anodic Finish: AA-M12C22A32/A34 (Mechanical Finish: nonspecular as fabricated; Chemical Finish: etched, medium matte; Anodic Coating: Architectural Class II, integrally colored or electrolytically deposited color coating 0.010-mm or thicker) complying with AAMA 611.
   1. Color: Dark bronze.

PART 3 - EXECUTION

3.1 INSTALLATION

A. Comply with manufacturer's written instructions for installing windows, hardware, accessories, and other components. For installation procedures and requirements not addressed in manufacturer's written instructions, comply with installation requirements in ASTM E2112.
B. Install windows level, plumb, square, true to line, without distortion or impeding thermal movement, anchored securely in place to structural support, and in proper relation to wall flashing and other adjacent construction to produce weathertight construction.
C. Install windows and components to drain condensation, water penetrating joints, and moisture migrating within windows to the exterior.
D. Separate aluminum and other corrodible surfaces from sources of corrosion or electrolytic action at points of contact with other materials.
E. Clean exposed surfaces immediately after installing windows. Avoid damaging protective coatings and finishes. Remove excess sealants, glazing materials, dirt, and other substances.
F. Remove and replace glass that has been broken, chipped, cracked, abraded, or damaged during construction period.

END OF SECTION

SECTION 08 80 00 - GLAZING

PART 1 - GENERAL

1.1 SUMMARY

A. Section Includes:
   1. Glass products.
   2. Insulating glass.
   3. Glazing tapes.
   4. Miscellaneous glazing materials.

B. Related Requirements:
   1. Division 01 Specification Sections apply to Work of this Section.
   2. Section 08 83 00 "Mirrors."

1.2 DEFINITIONS

A. Glass Manufacturers: Firms that produce primary glass, fabricated glass, or both, as defined in referenced glazing publications.

B. Glass Thicknesses: Indicated by thickness designations in millimeters in accordance with ASTM C1036.

C. IBC: International Building Code.

D. Interspace: Space between lites of an insulating-glass unit.

1.3 COORDINATION

A. Coordinate glazing channel dimensions to provide necessary bite on glass, minimum edge and face clearances, and adequate sealant thicknesses, with reasonable tolerances to achieve proper safety margins for glazing retention under each design load case, load case combination, and service condition.

1.4 ACTION SUBMITTALS

A. Product Data: For each type of product.

B. Glass Samples: For each type of glass product other than clear monolithic vision glass; 12 inches square.

C. Glazing Schedule: List glass types and thicknesses for each size opening and location. Use same designations indicated on Drawings.

1.5 DELIVERY, STORAGE, AND HANDLING

A. Protect glazing materials in accordance with manufacturer's written instructions. Prevent damage to glass and glazing materials from condensation, temperature changes, direct exposure to sun, or other causes.

B. Comply with insulating-glass manufacturer's written instructions for venting and sealing units to avoid hermetic seal ruptures due to altitude change.

1.6 FIELD CONDITIONS

A. Environmental Limitations: Do not proceed with glazing when ambient and substrate temperature conditions are outside limits permitted by glazing material manufacturers and when glazing channel substrates are wet from rain, frost, condensation, or other causes.
   1. Do not install glazing sealants when ambient and substrate temperature conditions are outside limits permitted by sealant manufacturer or are below 40 degrees F.

PART 2 - PRODUCTS

2.1 MANUFACTURERS

A. General Glass Manufactures: Unless specified otherwise and subject to compliance with requirements, provide products by the following:
   1. AGC Glass Company North America, Inc.
   2. Guardian Glass; SunGuard.
   3. Pilkington North America.
   4. Viracon, Inc.
   5. Vitro Architectural Glass.

2.2 PERFORMANCE REQUIREMENTS

A. General: Installed glazing systems shall withstand normal thermal movement and wind and impact loads (where applicable) without failure, including loss or glass breakage attributable to defective manufacture, fabrication, or installation; failure of sealants or gaskets to remain watertight and airtight; deterioration of glazing materials; or other defects in construction.

B. Structural Performance: Glazing shall withstand the following design loads within limits and under conditions indicated determined in accordance with the IBC and ASTM E1300:
   1. Design Wind Pressures: As indicated on Drawings.
      a. Wind Design Data: As indicated on Drawings.
   2. Thermal Loads: Design glazing to resist thermal stress breakage induced by differential temperature conditions and limited air circulation within individual glass lites and insulated glazing units.

C. Safety Glazing: Where safety glazing is indicated, provide glazing that complies with 16 CFR 1201, Category II.

D. Thermal and Optical Performance Properties: Provide glass with performance properties specified, as indicated in manufacturer's published test data, based on procedures indicated below:
   1. For insulating-glass units, properties are based on units of thickness indicated for overall unit and for each lite.
   2. U-Factors: Center-of-glazing values, in accordance with NFRC 100 and based on most current non-beta version of LBL's WINDOW computer program, expressed as Btu per square feet by hour by degrees F.

2.3 GLASS PRODUCTS, GENERAL

A. Glazing Publications: Comply with published recommendations of glass product manufacturers and organizations below unless more stringent requirements are indicated. See these publications for glazing terms not otherwise defined in this Section or in referenced standards.
   1. NGA Publications: "Glazing Manual."
   2. AAMA Publications: AAMA GDSG-1, "Glass Design for Sloped Glazing," and AAMA TIR A7, "Sloped Glazing Guidelines."
   3. IGMA Publication for Sloped Glazing: IGMA TB-3001, "Guidelines for Sloped Glazing."
   4. IGMA Publication for Insulating Glass: SIGMA TM-3000, "North American Glazing Guidelines for Sealed Insulating Glass Units for Commercial and Residential Use."

B. Safety Glazing Labeling: Where safety glazing is indicated, permanently mark glazing with certification label of the SGCC or another certification agency acceptable to authorities having jurisdiction or manufacturer. Label shall indicate manufacturer's name, type of glass, thickness, and safety glazing standard with which glass complies.

C. Thickness: Where glass thickness is indicated, it is a minimum. Provide glass that complies with performance requirements and is not less than thickness indicated.
   1. Thickness of Tinted Glass: Provide same thickness for each tint color indicated throughout Project.

D. Strength: Where annealed float glass is indicated, provide annealed float glass, heat-strengthened float glass, or fully tempered float glass as needed to comply with "Performance Requirements" Article. Where heat-strengthened float glass is indicated, provide heat-strengthened float glass or fully tempered float glass as needed to comply with "Performance Requirements" Article. Where fully tempered float glass is indicated, provide fully tempered float glass.

2.4 GLASS PRODUCTS

A. Reflective- and Low-E-Coated Vision Glass: ASTM C1376.
   1. Manufacturers: Subject to compliance with requirements, available manufacturers offering products that may be incorporated into the Work include, but are not limited to, the following:
      a. Cardinal Glass Industries.
      b. Guardian Glass; SunGuard.
      c. Saint-Gobain Glass Exprover NA.
      d. Vitro Architectural Glass.

2.5 INSULATING GLASS

A. Insulating-Glass Units: Factory-assembled units consisting of sealed lites of glass separated by a dehydrated interspace, qualified in accordance with ASTM E2190.
   1. Sealing System: Dual seal, with manufacturer's standard primary and secondary sealants.
   2. Desiccant: Molecular sieve or silica gel, or a blend of both.

2.6 GLAZING TAPES

A. Back-Bedding Mastic Glazing Tapes: Preformed, butyl-based, 100 percent solids elastomeric tape; nonstaining and nonmigrating in contact with nonporous surfaces; with or without spacer rod as recommended in writing by tape and glass manufacturers for application indicated; and complying with ASTM C1281 and AAMA 800 for products indicated below:
   1. AAMA 806.3 tape, for glazing applications in which tape is subject to continuous pressure.
   2. AAMA 807.3 tape, for glazing applications in which tape is not subject to continuous pressure.

2.7 MISCELLANEOUS GLAZING MATERIALS

A. General: Provide products of material, size, and shape complying with referenced glazing standard, recommended in writing by manufacturers of glass and other glazing materials for application indicated, and with a proven record of compatibility with surfaces contacted in installation.
B. Cleaners, Primers, and Sealers: Types recommended by sealant or gasket manufacturer.
C. Setting Blocks:
   1. Type recommended in writing by sealant or glass manufacturer.
D. Spacers:
   1. Type recommended in writing by sealant or glass manufacturer.
E. Edge Blocks:
   1. Type recommended in writing by sealant or glass manufacturer.

2.8 FABRICATION OF GLAZING UNITS

A. Fabricate glazing units in sizes required to fit openings indicated for Project, with edge and face clearances, edge and surface conditions, and bite complying with written instructions of product manufacturer and referenced glazing publications, to comply with system performance requirements.
   1. Allow for thermal movements from ambient and surface temperature changes acting on glass framing members and glazing components.
      a. Temperature Change: 120 degrees F, ambient; 180 degrees F, material surfaces.

PART 3 - EXECUTION

3.1 EXAMINATION

A. Examine framing, glazing channels, and stops, with Installer present, for compliance with the following:
   1. Manufacturing and installation tolerances, including those for size, squareness, and offsets at corners.
   2. Presence and functioning of weep systems.
   3. Minimum required face and edge clearances.
   4. Effective sealing between joints of glass-framing members.
B. Proceed with installation only after unsatisfactory conditions have been corrected.

3.2 PREPARATION

A. Clean glazing channels and other framing members receiving glass immediately before glazing. Remove coatings not firmly bonded to substrates.
B. Examine glazing units to locate exterior and interior surfaces. Label or mark units as needed so that exterior and interior surfaces are readily identifiable. Do not use materials that leave visible marks in the completed Work.

3.3 GLAZING, GENERAL

A. Comply with combined written instructions of manufacturers of glass, sealants, gaskets, and other glazing materials, unless more stringent requirements are indicated, including those in referenced glazing publications.
B. Protect glass edges from damage during handling and installation. Remove damaged glass from Project Site and legally dispose of off Project Site. Damaged glass includes glass with edge damage or other imperfections that, when installed, could weaken glass, impair performance, or impair appearance.
C. Apply primers to joint surfaces where required for adhesion of sealants, as determined by preconstruction testing.
D. Install setting blocks in sill rabbets, sized and located to comply with referenced glazing publications, unless otherwise required by glass manufacturer. Set blocks in thin course of compatible sealant suitable for heel bead.
E. Do not exceed edge pressures stipulated by glass manufacturers for installing glass lites.
F. Provide spacers for glass lites where length plus width is larger than 50 inches.
    1. Locate spacers directly opposite each other on both inside and outside faces of glass. Install correct size and spacing to preserve required face clearances, unless gaskets and glazing tapes are used that have demonstrated ability to maintain required face clearances and to comply with system performance requirements.
    2. Provide 1/8-inch-minimum bite of spacers on glass and use thickness equal to sealant width. With glazing tape, use thickness slightly less than final compressed thickness of tape.
G. Provide edge blocking where indicated or needed to prevent glass lites from moving sideways in glazing channel, as recommended in writing by glass manufacturer and in accordance with requirements in referenced glazing publications.
H. Set glass lites in each series with uniform pattern, draw, bow, and similar characteristics.
I. Set glass lites with proper orientation so that coatings face exterior or interior as specified.

3.4 TAPE GLAZING

A. Position tapes on fixed stops so that, when compressed by glass, their exposed edges are flush with or protrude slightly above sightline of stops.
B. Install tapes continuously, but not necessarily in one continuous length. Do not stretch tapes to make them fit opening.
C. Cover vertical framing joints by applying tapes to heads and sills first, then to jambs. Cover horizontal framing joints by applying tapes to jambs, then to heads and sills.
D. Place joints in tapes at corners of opening with adjoining lengths butted together, not lapped. Seal joints in tapes with compatible sealant approved by tape manufacturer.
E. Do not remove release paper from tape until right before each glazing unit is installed.
F. Apply heel bead of elastomeric sealant.

G. Center glass lites in openings on setting blocks, and press firmly against tape by inserting dense compression gaskets formed and installed to lock in place against faces of removable stops. Start gasket applications at corners and work toward centers of openings.
H. Apply cap bead of elastomeric sealant over exposed edge of tape.

3.5 CLEANING AND PROTECTION

A. Immediately after installation, remove non-permanent labels and clean surfaces.
B. Protect glass from contact with contaminating substances resulting from construction operations. Examine glass surfaces adjacent to or below exterior concrete and other masonry surfaces at frequent intervals during construction, but not less than once a month, for buildup of dirt, scum, alkaline deposits, or stains.
    1. If, despite such protection, contaminating substances do contact with glass, remove substances immediately as recommended in writing by glass manufacturer. Remove and replace glass that cannot be cleaned without damage to coatings.
C. Remove and replace glass that is damaged during construction period.
D. Wash glass on both exposed surfaces not more than 4 days before date scheduled for inspections that establish date of Substantial Completion. Wash glass as recommended in writing by glass manufacturer.
    1. Safety glazing required.

3.6 INSULATING GLASS SCHEDULE

A. Low-E-Coated, Tinted Insulating Glass Type G12:
    1. Overall Unit Thickness: 1 inch.
    2. Minimum Thickness of Each Glass Lite: 6 millimeters.
    3. Outdoor Lite: Tinted float glass.
    4. Tint Color: Gray.
    5. Interspace Content: Air.
    6. Indoor Lite: Clear float glass.
    7. Low-E Coating: Sputtered on second surface.
    8. Summer Daytime U-Factor: 0.22 maximum.
    9. SGHC: .25 maximum.

END OF SECTION

SECTION 09 22 16 - NON-STRUCTURAL METAL FRAMING

PART 1 - GENERAL

1.1 SUMMARY

A. Section Includes:
   1. Non-load-bearing steel framing systems for interior partitions.
   2. Suspension systems for interior ceilings and soffits.
B. Related Requirements:
   1. Division 01 Specification Sections apply to Work of this Section.

1.2 ACTION SUBMITTALS

A. Product Data: For each type of product.

1.3 INFORMATIONAL SUBMITTALS

A. Product Certificates: For each type of code-compliance certification for studs and tracks.

1.4 QUALITY ASSURANCE

A. Code-Compliance Certification of Studs and Tracks: Provide documentation that framing members are certified according to the product-certification program of the Certified Steel Stud Association, the Steel Framing Industry Association, the Steel Stud Manufacturers Association, or the Supreme Steel Framing System Association.

1.5 DELIVERY, STORAGE, AND HANDLING

A. Notify manufacturer of damaged materials received prior to installation.
B. Deliver materials in manufacturer's original, unopened, undamaged containers with identification labels intact.
C. Protect cold-formed metal framing from corrosion, deformation, and other damage during delivery, storage, and handling as required by AISI S202, "Code of Standard Practice for Cold-Formed Steel Structural Framing."

PART 2 - PRODUCTS

2.1 PERFORMANCE REQUIREMENTS

A. Horizontal Deflection: For composite and non-composite wall assemblies, limited to following ratios of the wall height based on horizontal loading of 5 pounds of force per square foot.
   1. Plaster: 1/360.
   2. Gypsum Board and Other Finishes: 1/240.
B. Design Loads: As indicated on architectural Drawings or 5 pounds of force per square foot minimum as required by the IBC.

2.2 FRAMING SYSTEMS

A. Framing Members, General: Comply with AISI S220 for conditions indicated.
   1. Steel Sheet Components: Comply with AISI S220 requirements for metal unless otherwise indicated
   2. Protective Coating: Comply with AISI S220; ASTM A653, G40; or coating with equivalent corrosion resistance. Galvannealed products are unacceptable.
      a. Coating demonstrates equivalent corrosion resistance with an evaluation report acceptable to authorities having jurisdiction.

B. Studs and Track: AISI S220.
   1. Manufacturers: Subject to compliance with requirements, available manufacturers offering products that may be incorporated into the Work include, but are not limited to, the following:
      a. CEMCO; California Expanded Metal Products Co.
      b. ClarkDietrich.
      c. Jaimes Industries.
   2. Minimum Base-Steel Thickness: As required by performance requirements for horizontal deflection.
   3. Depth: As indicated on Drawings.

2.3 SUSPENSION SYSTEMS

A. Tie Wire: ASTM A641, Class 1 zinc coating, soft temper, 0.062-inch-diameter wire, or double strand of 0.048-inch-diameter wire.

B. Wire Hangers: ASTM A641, Class 1 zinc coating, soft temper, 0.16-inch in diameter.

2.4 AUXILIARY MATERIALS

A. General: Provide auxiliary materials that comply with referenced installation standards.
   1. Fasteners for Steel Framing: Of type, material, size, corrosion resistance, holding power, and other properties required to fasten steel members to substrates.

PART 3 - EXECUTION

3.1 EXAMINATION

A. Examine areas and substrates, with Installer present, and including welded hollow-metal frames, cast-in anchors, and structural framing, for compliance with requirements and other conditions affecting performance of the Work.

B. Proceed with installation only after unsatisfactory conditions have been corrected.

3.2 PREPARATION

A. Suspended Assemblies: Coordinate installation of suspension systems with installation of overhead structure to ensure that inserts and other provisions for anchorages to building structure have been installed to receive hangers at spacing required to support the Work and that hangers will develop their full strength.
   1. Furnish concrete inserts and other devices indicated to other trades for installation in advance of time needed for coordination and construction.

3.3 INSTALLATION, GENERAL

A. Installation Standard: ASTM C754.
   1. Gypsum Board Assemblies: Also comply with requirements in ASTM C840 that apply to framing installation.
B. Install framing and accessories plumb, square, and true to line, with connections securely fastened.
C. Install supplementary framing, and blocking to support fixtures, equipment services, heavy trim, grab bars, toilet accessories, furnishings, or similar construction.
D. Install bracing at terminations in assemblies.
E. Do not bridge building control and expansion joints with non-load-bearing steel framing members. Frame both sides of joints independently.

3.4 INSTALLING FRAMED ASSEMBLIES

A. Install framing system components according to spacings indicated, but not greater than spacings required by referenced installation standards for assembly types.
B. Where studs are installed directly against exterior masonry walls or dissimilar metals at exterior walls, install isolation strip between studs and exterior wall.
C. Install studs so flanges within framing system point in same direction.
D. Install tracks at floors and overhead supports. Extend framing full height to structural supports or substrates above suspended ceilings except where partitions are indicated to terminate at suspended ceilings. Continue framing around ducts that penetrate partitions above ceiling.
   1. Door Openings: Screw vertical studs at jambs to jamb anchor clips on door frames; install track section (for cripple studs) at head and secure to jamb studs.
      a. Install two studs at each jamb unless otherwise indicated.
      b. Install cripple studs at head adjacent to each jamb stud, with a minimum 1/2-inch clearance from jamb stud to allow for installation of control joint in finished assembly.
      c. Extend jamb studs through suspended ceilings and attach to underside of overhead structure.
   2. Other Framed Openings: Frame openings other than door openings the same as required for door openings unless otherwise indicated. Install framing below sills of openings to match framing required above door heads.
E. Direct Furring:
   1. Screw to wood framing.
   2. Attach to concrete or masonry with stub nails, screws designed for masonry attachment, or powder-driven fasteners spaced 24 inches on center.
F. Installation Tolerance: Install each framing member so fastening surfaces vary not more than 1/8-inch from the plane formed by faces of adjacent framing.

3.5 INSTALLING CEILING SUSPENSION SYSTEMS

A. Install suspension system components according to spacings indicated, but not greater than spacings required by referenced installation standards for assembly types.
   1. Hangers: 48 inches on center.

B. Isolate suspension systems from building structure where they abut or are penetrated by building structure to prevent transfer of loading imposed by structural movement.

C. Suspend hangers from building structure as follows:
   1. Install hangers plumb and free from contact with insulation or other objects within ceiling plenum that are not part of supporting structural or suspension system.
      a. Splay hangers only where required to miss obstructions and offset resulting horizontal forces by bracing, countersplaying, or other equally effective means.
   2. Where width of ducts and other construction within ceiling plenum produces hanger spacings that interfere with locations of hangers required to support standard suspension system members, install supplemental suspension members and hangers in the form of trapezes or equivalent devices.
      a. Size supplemental suspension members and hangers to support ceiling loads within performance limits established by referenced installation standards.
   3. Wire Hangers: Secure by looping and wire tying, either directly to structures or to inserts, eye screws, or other devices and fasteners that are secure and appropriate for substrate, and in a manner that will not cause hangers to deteriorate or otherwise fail.
   4. Do not attach hangers to steel roof deck.
   5. Do not attach hangers to permanent metal forms. Furnish cast-in-place hanger inserts that extend through forms.
   6. Do not attach hangers to rolled-in hanger tabs of composite steel floor deck.
   7. Do not connect or suspend steel framing from ducts, pipes, or conduit.

D. Installation Tolerances: Install suspension systems that are level to within 1/8-inch in 12 feet measured lengthwise on each member that will receive finishes and transversely between parallel members that will receive finishes.

END OF SECTION

SECTION 09 29 00 - GYPSUM BOARD

PART 1 - GENERAL

1.1 SUMMARY

A. Section Includes:
   1. Interior gypsum board.

B. Related Requirements:
   1. Division 01 Specification Sections apply to Work of this Section.
   2. Section 09 22 16 "Non-Structural Metal Framing" for non-structural steel framing and suspension systems that support gypsum board panels.

1.2 ACTION SUBMITTALS

A. Product Data: For the following:
   1. Gypsum wallboard.
   2. Gypsum board, Type X.
   3. Interior trim.
   4. Joint treatment materials.
   5. Laminating adhesive.

1.3 DELIVERY, STORAGE AND HANDLING

A. Store materials inside under cover and keep them dry and protected against weather, condensation, direct sunlight, construction traffic, and other potential causes of damage. Stack panels flat and supported on risers on a flat platform to prevent sagging.

1.4 FIELD CONDITIONS

A. Environmental Limitations: Comply with ASTM C840 requirements or gypsum board manufacturer's written instructions, whichever are more stringent.

B. Do not install paper-faced gypsum panels until installation areas are enclosed and conditioned.

C. Do not install panels that are wet, moisture damaged, and mold damaged.
   1. Indications that panels are wet or moisture damaged include, but are not limited to, discoloration, sagging, or irregular shape.
   2. Indications that panels are mold damaged include, but are not limited to, fuzzy or splotchy surface contamination and discoloration.

PART 2 - PRODUCTS

2.1 GYPSUM BOARD, GENERAL

A. Manufacturers: Unless noted otherwise and subject to compliance with requirements, provide products by the following:
   1. Georgia-Pacific Gypsum LLC.
   2. National Gypsum Company.
   3. USG Corporation.

B. Size: Provide maximum lengths and widths available that will minimize joints in each area and that correspond with support system indicated.

2.2 INTERIOR GYPSUM BOARD

A. Gypsum Wallboard: ASTM C1396.
   1. Thickness: 5/8-inch.
   2. Long Edges: Tapered.

B. Gypsum Board, Type X: ASTM C1396.
   1. Thickness: 5/8-inch.
   2. Long Edges: Tapered.

2.3 TRIM ACCESSORIES

A. Interior Trim: ASTM C1047.
   1. Material: Galvanized or aluminum-coated steel sheet, rolled zinc, plastic, or paper-faced galvanized-steel sheet.
   2. Shapes:
      a. Cornerbead.
      b. U-Bead: J-shaped; exposed short flange does not receive joint compound.
      c. Expansion (control) joint.
      d. Base-of-Wall Moisture Barrier Trim: Galvanized-steel sheet, 2 inches high to extruded PVC, 1/2-inch high.
         1) Manufacturers: Subject to compliance with requirements, provide products by the following:
            a) VersaDry, LLC.
            b) Waterguard.

2.4 JOINT TREATMENT MATERIALS

A. General: Comply with ASTM C475.

B. Joint Tape:
   1. Interior Gypsum Board: Paper.

C. Joint Compound for Interior Gypsum Board: For each coat, use formulation that is compatible with other compounds applied on previous or for successive coats.
   1. Prefilling: At open joints, rounded or beveled panel edges, and damaged surface areas, use setting-type taping compound.
   2. Embedding and First Coat: For embedding tape and first coat on joints, fasteners, and trim flanges, use setting-type taping compound.
      a. Use setting-type compound for installing paper-faced metal trim accessories.
   3. Fill Coat: For second coat, use setting-type, sandable topping compound.
   4. Finish Coat: For third coat, use drying-type, all-purpose compound.

2.5 AUXILIARY MATERIALS

A. Provide auxiliary materials that comply with referenced installation standards and manufacturer's written instructions.
B. Steel Drill Screws: ASTM C1002 unless otherwise indicated.
   1. Use screws complying with ASTM C954 for fastening panels to steel members from 0.033- to 0.112-inch thick.
C. Thermal Insulation: As specified in Section 07 21 00 "Thermal Insulation."

PART 3 - EXECUTION

3.1 EXAMINATION

A. Examine areas and substrates including welded hollow-metal frames and support framing, with Installer present, for compliance with requirements and other conditions affecting performance of the Work.
B. Examine panels before installation. Reject panels that are wet, moisture damaged, and mold damaged.
C. Proceed with installation only after unsatisfactory conditions have been corrected.

3.2 INSTALLATION AND FINISHING OF PANELS, GENERAL

A. Comply with ASTM C840.
B. Install panels with face side out. Butt panels together for a light contact at edges and ends with not more than 1/16-inch of open space between panels. Do not force into place.
C. Locate edge and end joints over supports, except in ceiling applications where intermediate supports or gypsum board back-blocking is provided behind end joints. Do not place tapered edges against cut edges or ends. Stagger vertical joints on opposite sides of partitions. Do not make joints other than control joints at corners of framed openings.
D. Form control and expansion joints with space between edges of adjoining gypsum panels.
E. Cover both faces of support framing with gypsum panels in concealed spaces (above ceilings, etc.), except in chases braced internally.
   1. Unless concealed application is indicated or required for sound, fire, air, or smoke ratings, coverage may be accomplished with scraps of not less than 8 square feet in area.
   2. Fit gypsum panels around ducts, pipes, and conduits.
   3. Where partitions intersect structural members projecting below underside of floor/roof slabs and decks, cut gypsum panels to fit profile formed by structural members; allow 1/4- to 3/8-inch-wide joints to install sealant.

F. Isolate perimeter of gypsum board applied to non-load-bearing partitions at structural abutments. Provide 1/4- to 1/2-inch-wide spaces at these locations and trim edges with edge trim where edges of panels are exposed. Seal joints between edges and abutting structural surfaces with acoustical sealant.

G. Attachment to Steel Framing: Attach panels so leading edge or end of each panel is attached to open (unsupported) edges of stud flanges first.

3.3 INSTALLATION OF INTERIOR GYPSUM BOARD

A. Install interior gypsum board in the following locations:
   1. Wallboard Type: As indicated on Drawings.

B. Single-Layer Application:
   1. On partitions/walls, apply gypsum panels horizontally (perpendicular to framing) unless otherwise indicated or required by fire-resistance-rated assembly, and minimize end joints.
      a. Stagger abutting end joints not less than one framing member in alternate courses of panels.
   2. On Z-shaped furring members, apply gypsum panels vertically (parallel to framing) with no end joints. Locate edge joints over furring members.
   3. Fastening Methods: Apply gypsum panels to supports with steel drill screws.

C. Multilayer Application:
   1. On partitions/walls, apply gypsum board indicated for base layers and face layers vertically (parallel to framing) with joints of base layers located over stud or furring member and face-layer joints offset at least one stud or furring member with base-layer joints unless otherwise indicated or required by fire-resistance-rated assembly. Stagger joints on opposite sides of partitions.
   2. On Z-shaped furring members, apply base layer vertically (parallel to framing) and face layer either vertically (parallel to framing) or horizontally (perpendicular to framing) with vertical joints offset at least one furring member. Locate edge joints of base layer over furring members.
   3. Fastening Methods: Fasten base layers and face layers separately to supports with screws.

3.4 INSTALLATION OF TRIM ACCESSORIES

A. General: For trim with back flanges intended for fasteners, attach to framing with same fasteners used for panels. Otherwise, attach trim according to manufacturer's written instructions.

B. Control Joints: Install control joints according to ASTM C840 and in specific locations approved by Architect for visual effect.

C. Interior Trim: Install in the following locations:
   1. Cornerbead: Use at outside corners unless otherwise indicated.
   2. U-Bead: Use at exposed panel edges.
   3. Base-of-Wall Moisture Barrier Trim: Install per manufacture's instructions. At restroom walls and walls within 4 feet of plumbing, provide PVC base-of-wall moisture barrier trim with sealant between trim and floor.

3.5 FINISHING GYPSUM BOARD

A. General: Treat gypsum board joints, interior angles, edge trim, control joints, penetrations, fastener heads, surface defects, and elsewhere as required to prepare gypsum board surfaces for decoration. Promptly remove residual joint compound from adjacent surfaces.
B. Prefill open joints and damaged surface areas.
C. Apply joint tape over gypsum board joints, except for trim products specifically indicated as not intended to receive tape.
D. Gypsum Board Finish Levels: Finish panels to levels indicated below and according to ASTM C840:
    1. Level 4: At panel surfaces that will be exposed to view unless otherwise indicated.
        a. Primer and its application to surfaces are specified in Section 09 91 23 "Interior Painting."

3.6 PROTECTION

A. Protect adjacent surfaces from drywall compound and promptly remove from floors and other non-drywall surfaces. Repair surfaces stained, marred, or otherwise damaged during drywall application.
B. Protect installed products from damage from weather, condensation, direct sunlight, construction, and other causes during remainder of the construction period.
C. Remove and replace panels that are wet, moisture damaged, and mold damaged.
    1. Indications that panels are wet or moisture damaged include, but are not limited to, discoloration, sagging, or irregular shape.
    2. Indications that panels are mold damaged include, but are not limited to, fuzzy or splotchy surface contamination and discoloration.

3.7 SCHEDULE

A. Attachment A behind this Section.

END OF SECTION

SECTION 09 51 13 - ACOUSTICAL PANEL CEILINGS

PART 1 - GENERAL

1.1 SUMMARY

A. Section includes acoustical panels and exposed suspension systems for interior ceilings.
B. Related Requirements:
   1. Division 01 Specification Sections apply to Work of this Section.
C. Products furnished, but not installed under this Section, include anchors, clips, and other ceiling attachment devices to be cast in concrete.

1.2 INFORMATIONAL SUBMITTALS

A. Field quality-control reports.

1.3 DELIVERY, STORAGE, AND HANDLING

A. Deliver acoustical panels, suspension-system components, and accessories to Project Site and store them in a fully enclosed, conditioned space where they will be protected against damage from moisture, humidity, temperature extremes, direct sunlight, surface contamination, and other causes.
B. Before installing acoustical panels, permit them to reach room temperature and a stabilized moisture content.

1.4 FIELD CONDITIONS

A. Environmental Limitations: Do not install acoustical panel ceilings until spaces are enclosed and weathertight, wet-work in spaces is complete and dry, work above ceilings is complete, and ambient temperature and humidity conditions are maintained at the levels indicated for Project when occupied for its intended use.
   1. Pressurized Plenums: Operate ventilation system for not less than 48 hours before beginning acoustical panel ceiling installation.

PART 2 - PRODUCTS

2.1 ACOUSTICAL PANELS

A. Manufacturers: Subject to compliance with requirements, available manufacturers offering products that may be incorporated into the Work include, but are not limited to, the following:
   1. Armstrong World Industries, Inc.
   2. CertainTeed Corporation.
   3. United States Gypsum Company.
B. Edge/Joint Detail: Square.

2.2 METAL SUSPENSION SYSTEM

A. Manufacturers: Subject to compliance with requirements, available manufacturers offering products that may be incorporated into the Work include, but are not limited to, the following:
   1. Armstrong World Industries, Inc.
   2. CertainTeed Corporation.
   3. United States Gypsum Company.

2.3 ACCESSORIES

A. Wire Hangers, Braces, and Ties: Provide wires as follows:
   1. Zinc-Coated, Carbon-Steel Wire: ASTM A641, Class 1 zinc coating, soft temper.
B. Hanger Rods: Mild steel, zinc coated or protected with rust-inhibitive paint.
C. Angle Hangers: Angles with legs not less than 7/8-inch wide; formed with 0.04-inch- thick, galvanized-steel sheet complying with ASTM A653, G90 coating designation; with bolted connections and 5/16-inch-diameter bolts.

PART 3 - EXECUTION

3.1 EXAMINATION

A. Examine substrates, areas, and conditions, including structural framing to which acoustical panel ceilings attach or abut, with Installer present, for compliance with requirements specified in this and other Sections that affect ceiling installation and anchorage and with requirements for installation tolerances and other conditions affecting performance of acoustical panel ceilings.
B. Examine acoustical panels before installation. Reject acoustical panels that are wet, moisture damaged, or mold damaged.
C. Proceed with installation only after unsatisfactory conditions have been corrected.

3.2 PREPARATION

A. Measure each ceiling area and establish layout of acoustical panels to balance border widths at opposite edges of each ceiling. Avoid using less-than-half-width panels at borders unless otherwise indicated, and comply with layout shown on reflected ceiling plans.
B. Layout openings for penetrations centered on the penetrating items.

3.3 INSTALLATION

A. Install acoustical panel ceilings according to ASTM C636 and manufacturer's written instructions.
B. Suspend ceiling hangers from building's structural members and as follows:
   1. Install hangers plumb and free from contact with insulation or other objects within ceiling plenum that are not part of supporting structure or of ceiling suspension system.
   2. Splay hangers only where required to miss obstructions; offset resulting horizontal forces by bracing, countersplaying, or other equally effective means.

3. Where width of ducts and other construction within ceiling plenum produces hanger spacings that interfere with location of hangers at spacings required to support standard suspension-system members, install supplemental suspension members and hangers in form of trapezes or equivalent devices.
4. Secure wire hangers to ceiling-suspension members and to supports above with a minimum of three tight turns. Connect hangers directly to structure or to inserts, eye screws, or other devices that are secure and appropriate for substrate and that will not deteriorate or otherwise fail due to age, corrosion, or elevated temperatures.
5. Secure flat, angle, channel, and rod hangers to structure, including intermediate framing members, by attaching to inserts, eye screws, or other devices that are secure and appropriate for both the structure to which hangers are attached and the type of hanger involved. Install hangers in a manner that will not cause them to deteriorate or fail due to age, corrosion, or elevated temperatures.
6. Do not support ceilings directly from permanent metal forms or floor deck. Fasten hangers to cast-in-place hanger inserts, postinstalled mechanical or adhesive anchors, or power-actuated fasteners that extend through forms into concrete.
7. When steel framing does not permit installation of hanger wires at spacing required, install carrying channels or other supplemental support for attachment of hanger wires.
8. Do not attach hangers to steel deck tabs.
9. Do not attach hangers to steel roof deck. Attach hangers to structural members.
10. Space hangers not more than 48 inches on center along each member supported directly from hangers unless otherwise indicated; provide hangers not more than 8 inches from ends of each member.
11. Size supplemental suspension members and hangers to support ceiling loads within performance limits established by referenced standards.

C. Secure bracing wires to ceiling suspension members and to supports with a minimum of four tight turns. Suspend bracing from building's structural members as required for hangers, without attaching to permanent metal forms, steel deck, or steel deck tabs. Fasten bracing wires into concrete with cast-in-place or postinstalled anchors.

D. Install edge moldings and trim of type indicated at perimeter of acoustical ceiling area and where necessary to conceal edges of acoustical panels.
1. Apply acoustical sealant in a continuous ribbon concealed on back of vertical legs of moldings before they are installed.
2. Screw attach moldings to substrate at intervals not more than 16 inches on center and not more than 3 inches from ends. Miter corners accurately and connect securely.
3. Do not use exposed fasteners, including pop rivets, on moldings and trim.

E. Install suspension-system runners so they are square and securely interlocked with one another. Remove and replace dented, bent, or kinked members.

F. Install acoustical panels with undamaged edges and fit accurately into suspension-system runners and edge moldings. Scribe and cut panels at borders and penetrations to provide precise fit.
1. Arrange directionally patterned acoustical panels as follows:
   a. As indicated on reflected ceiling plans.
   b. Install panels with pattern running in one direction parallel to long axis of space.
   c. Install panels in a basket-weave pattern.
2. For square-edged panels, install panels with edges fully hidden from view by flanges of suspension-system runners and moldings.

3. For reveal-edged panels on suspension-system runners, install panels with bottom of reveal in firm contact with top surface of runner flanges.
4. For reveal-edged panels on suspension-system members with box-shaped flanges, install panels with reveal surfaces in firm contact with suspension-system surfaces and panel faces flush with bottom face of runners.
5. Paint cut edges of panel remaining exposed after installation; match color of exposed panel surfaces using coating recommended in writing for this purpose by acoustical panel manufacturer.
6. Install hold-down clips in areas indicated; space according to panel manufacturer's written instructions unless otherwise indicated.
7. Install clean-room gasket system in areas indicated, sealing each panel and fixture as recommended by panel manufacturer's written instructions.
8. Protect lighting fixtures and air ducts according to requirements indicated for fire-resistance-rated assembly.

3.4 ERECTION TOLERANCES

A. Suspended Ceilings: Install main and cross runners level to a tolerance of 1/8-inch in 12 feet, non-cumulative.
B. Moldings and Trim: Install moldings and trim to substrate and level with ceiling suspension system to a tolerance of 1/8-inch in 12 feet, non-cumulative.

3.5 CLEANING

A. Clean exposed surfaces of acoustical panel ceilings, including trim, edge moldings, and suspension-system members. Comply with manufacturer's written instructions for cleaning and touchup of minor finish damage.
B. Remove and replace ceiling components that cannot be successfully cleaned and repaired to permanently eliminate evidence of damage.

END OF SECTION

SECTION 09 91 23 - INTERIOR PAINTING

PART 1 - GENERAL

1.1 SUMMARY

A. Section Includes:
   1. Surface preparation and the application of paint systems on:
      a. Concrete.
      b. Steel.
      c. Galvanized metal.
      d. Aluminum (not anodized or otherwise coated).
      e. Gypsum board.

B. Related Requirements:
   1. Division 01 Specification Sections apply to Work of this Section.
   2. Section 09 91 13 "Exterior Painting" for surface preparation and the application of paint systems on exterior substrates.

1.2 DEFINITIONS

A. Gloss Level 1: Not more than 5 units at 60 degrees and 10 units at 85 degrees, according to ASTM D523, a matte flat finish.

B. Gloss Level 2: Not more than 10 units at 60 degrees and 10 to 35 units at 85 degrees, according to ASTM D523, a high-side sheen flat, velvet-like finish.

C. Gloss Level 3: 10 to 25 units at 60 degrees and 10 to 35 units at 85 degrees, according to ASTM D523, an eggshell finish.

D. Gloss Level 4: 20 to 35 units at 60 degrees and not less than 35 units at 85 degrees, according to ASTM D523, a satin-like finish.

E. Gloss Level 5: 35 to 70 units at 60 degrees, according to ASTM D 523, a semi-gloss finish.

F. Gloss Level 6: 70 to 85 units at 60 degrees, according to ASTM D523, a gloss finish.

1.3 ACTION SUBMITTALS

A. Product Data: For each type of product. Include preparation requirements and application instructions.

B. Product List: For each product indicated, include the following:
   1. Cross-reference to paint system and locations of application areas. Use same designations indicated on Drawings and in schedules.
   2. VOC content.

1.4 DELIVERY, STORAGE, AND HANDLING

A. Delivery and Handling: Deliver products to Project Site in an undamaged condition in manufacturer's original sealed containers, complete with labels and instructions for handling, storing, unpacking, protecting, and installing. Packaging shall bear the manufacturer's label with the following information:
   1. Product name and type (description).
   2. Batch date.

3. Color number.
4. VOC content.
5. Environmental handling requirements.
6. Surface preparation requirements.
7. Application instructions.

B. Store materials not in use in tightly covered containers in well-ventilated areas with ambient temperatures continuously maintained at not less than 45 degrees F.
1. Maintain containers in clean condition, free of foreign materials and residue.
2. Remove rags and waste from storage areas daily.

1.5 FIELD CONDITIONS

A. Apply paints only when temperature of surfaces to be painted and ambient air temperatures are between 50 and 95 degrees F.
B. Do not apply paints when relative humidity exceeds 85 percent; at temperatures less than 5 degrees F above the dew point; or to damp or wet surfaces.
C. Lead Paint: It is not expected that lead paint will be encountered in the Work.
1. If suspected lead paint is encountered, do not disturb; immediately notify Architect and Owner.

PART 2 - PRODUCTS

2.1 MANUFACTURERS

A. Basis-of-Design Product: Subject to compliance with requirements, provide Sherwin-Williams Company products indicated or comparable product from one of the following:
1. Benjamin Moore & Co.
2. Kwal, Division of Sherwin-Williams.
3. PPG Architectural Finishes, Inc.
4. Kelly Moore.
5. Dunn Edwards.

B. Source Limitations: Obtain paint materials from single source from single listed manufacturer.
1. Manufacturer's designations listed on a separate color schedule are for color reference only and do not indicate prior approval.

2.2 PAINT, GENERAL

A. Standards: Provide products that comply with manufacturer's premium first quality standards indicated and like VOC limits.
B. Material Compatibility:
1. Provide materials for use within each paint system that are compatible with one another and substrates indicated, under conditions of service and application as demonstrated by manufacturer, based on testing and field experience.
2. For each coat in a paint system, provide products recommended in writing by manufacturers of topcoat for use in paint system and on substrate indicated.

C. Colors: As selected by Architect from manufacturer's full range.

PART 3 - EXECUTION

3.1 EXAMINATION

A. Examine substrates and conditions, with Applicator present, for compliance with requirements for maximum moisture content and other conditions affecting performance of the Work. Verify suitability of substrates, including surface conditions and compatibility with existing finishes and primers. Where acceptability of substrate conditions is in question, apply samples and perform in-situ testing to verify compatibility, adhesion, and film integrity of new paint application.
   1. Report, in writing, conditions that may affect application, appearance, or performance of paint.

B. Substrate Conditions:
   1. Maximum Moisture Content of Substrates: When measured with an electronic moisture meter as follows:
      a. Concrete: 12 percent.
      b. Masonry (Clay and CMU): 12 percent.
      c. Wood: 15 percent.
      d. Gypsum Board: 12 percent.
      e. Plaster: 12 percent.
   2. Gypsum Board Substrates: Verify that finishing compound is sanded smooth.
   3. Plaster Substrates: Verify that plaster is fully cured.
   4. Spray-Textured Ceiling Substrates: Verify that surfaces are dry.

C. Proceed with coating application only after unsatisfactory conditions have been corrected; application of coating indicates acceptance of surfaces and conditions.

3.2 PREPARATION

A. Comply with manufacturer's written instructions and recommendations in "MPI Manual" applicable to substrates indicated.

B. Remove hardware, covers, plates, and similar items already in place that are removable and are not to be painted. If removal is impractical or impossible because of size or weight of item, provide surface-applied protection before surface preparation and painting.
   1. After completing painting operations, use workers skilled in the trades involved to reinstall items that were removed. Remove surface-applied protection if any.

C. Clean substrates of substances that could impair bond of paints, including dust, dirt, oil, grease, and incompatible paints and encapsulants.
   1. Remove incompatible primers and re-prime substrate with compatible primers or apply tie coat as required to produce paint systems indicated.

D. Steel Substrates: Remove rust, loose mill scale, and shop primer, if any. Clean using methods recommended in writing by paint manufacturer but not less than the following:
   1. SSPC-SP 2, "Hand Tool Cleaning."
   2. SSPC-SP 3, "Power Tool Cleaning."
   3. SSPC-SP 7/NACE No. 4, "Brush-off Blast Cleaning."
   4. SSPC-SP 11, "Power Tool Cleaning to Bare Metal."

E. Shop-Primed Steel Substrates: Clean field welds, bolted connections, and abraded areas of shop paint, and paint exposed areas with the same material as used for shop priming to comply with SSPC-PA 1 for touching up shop-primed surfaces.

F. Galvanized-Metal Substrates: Remove grease and oil residue from galvanized sheet metal fabricated from coil stock by mechanical methods to produce clean, lightly etched surfaces that promote adhesion of subsequently applied paints.
G. Aluminum Substrates: Remove loose surface oxidation.

3.3 APPLICATION

A. Apply paints according to manufacturer's written instructions and to recommendations in "MPI Manual."
   1. Use applicators and techniques suited for paint and substrate indicated.
   2. Paint surfaces behind movable equipment and furniture same as similar exposed surfaces. Before final installation, paint surfaces behind permanently fixed equipment or furniture with prime coat only.
   3. Paint front and backsides of access panels, removable or hinged covers, and similar hinged items to match exposed surfaces.
   4. Do not paint over labels of independent testing agencies or equipment name, identification, performance rating, or nomenclature plates.
   5. Primers specified in painting schedules may be omitted on items that are factory primed or factory finished if acceptable to topcoat manufacturers.
B. Tint each undercoat a lighter shade to facilitate identification of each coat if multiple coats of same material are to be applied. Tint undercoats to match color of topcoat, but provide sufficient difference in shade of undercoats to distinguish each separate coat.
C. If undercoats or other conditions show through topcoat, apply additional coats until cured film has a uniform paint finish, color, and appearance.
D. Apply paints to produce surface films without cloudiness, spotting, holidays, laps, brush marks, roller tracking, runs, sags, ropiness, or other surface imperfections. Cut in sharp lines and color breaks.
E. Painting Fire Suppression, Plumbing, HVAC, Electrical, Communication, and Electronic Safety and Security Work:
   1. Paint the following Work where exposed in equipment rooms:
      a. Equipment, including panelboards.
      b. Uninsulated metal piping.
      c. Uninsulated plastic piping.
      d. Pipe hangers and supports.
      e. Metal conduit.
      f. Plastic conduit.
      g. Tanks that do not have factory-applied final finishes.
   2. Paint the following Work where exposed in occupied spaces:
      a. Equipment, including panel boards.
      b. Uninsulated metal piping.
      c. Uninsulated plastic piping.
      d. Pipe hangers and supports.
      e. Metal conduit.
      f. Plastic conduit.
      g. Other items as directed by Architect.
   3. Paint portions of internal surfaces of metal ducts, without liner, behind air inlets and outlets that are visible from occupied spaces.

3.4 FIELD QUALITY CONTROL

A. Dry Film Thickness Testing: Owner may engage the services of a qualified testing and inspecting agency to inspect and test paint for dry film thickness.
   1. Contractor shall touch up and restore painted surfaces damaged by testing.
   2. If test results show that dry film thickness of applied paint does not comply with paint manufacturer's written recommendations, Contractor shall pay for testing and apply additional coats as needed to provide dry film thickness that complies with paint manufacturer's written recommendations.

3.5 CLEANING AND PROTECTION

A. At end of each workday, remove rubbish, empty cans, rags, and other discarded materials from Project Site.
B. After completing paint application, clean spattered surfaces. Remove spattered paints by washing, scraping, or other methods. Do not scratch or damage adjacent finished surfaces.
C. Protect Work of other trades against damage from paint application. Correct damage to Work of other trades by cleaning, repairing, replacing, and refinishing, as approved by Architect, and leave in an undamaged condition.
D. At completion of construction activities of other trades, touch up and restore damaged or defaced painted surfaces.

3.6 INTERIOR PAINTING SCHEDULE

A. Concrete Substrates, Nontraffic Surfaces:
   1. Water-Based Light Industrial Coating System:
      a. Prime Coat: Primer sealer, latex, interior: S-W Loxon Concrete & Masonry Primer Sealer, LX02W50, at 8.0 mils wet, 3.2 mils dry.
      b. Intermediate Coat: Light industrial coating, interior, water based, matching topcoat.
      c. Topcoat: Light industrial coating, interior, water based, eggshell (Gloss Level 3): S-W Pro Industrial Pre-Catalyzed Water Based Epoxy, K45-151 Series, at

PART 4 - MILS WET, 1.5 MILS DRY, PER COAT.

4.1 Metal Substrates (Aluminum, Steel, Galvanized Steel):

A. Latex System:
   1. Prime Coat: Primer, rust-inhibitive, water based: S-W Pro Industrial Pro-Cryl Universal Primer, B66-310 Series, at 5.0 to 10 mils wet, 2.0 to 4.0 mils dry.
   2. Intermediate Coat: Water-based acrylic, interior, matching topcoat.
   3. Topcoat: Water-based acrylic, semi-gloss (Gloss Level 5): S-W Pro Industrial Acrylic Semi-Gloss Coating, B66-650 Series, at 2.5 to 4.0 mils dry, per coat.
B. Water-Based Dry-Fall System:
   1. Top Coat: Dry-fall latex, flat: S-W Pro Industrial Waterborne Acrylic Dryfall Flat, B42-80 Series, at 6.0 mils wet, 1.7 mils dry.
   2. Top Coat: Dry-fall latex, eggshell: S-W Pro Industrial Waterborne Acrylic DryFall Eg-Shel, B42-2 Series, at 6.0 mils wet, 1.9 mils dry.

3. Top Coat: Dry-fall latex, semi-gloss: S-W Pro Industrial Waterborne Acrylic DryFall Semi-Gloss, B42-80 Series, at 5.8 mils wet, 2.3 mils dry.

C. Water-Based Light Industrial Coating System:
1. Prime Coat: Primer, rust-inhibitive, water based: S-W Pro Industrial Pro-Cryl Universal Primer, B66-310 Series, at 5.0 to 10.0 mils wet, 2.0 to 4.0 mils dry.
2. Intermediate Coat: Light industrial coating, interior, water based, matching topcoat.
3. Topcoat: Light industrial coating, interior, water based, eggshell (Gloss Level 3): S-W Pro Industrial Pre-Catalyzed Water Based Epoxy, K45-151 Series, at

PART 5 - MILS WET, 1.5 MILS DRY, PER COAT.

5.1 Topcoat: Light industrial coating, interior, water based, semi-gloss (Gloss Level 5): S-W Pro Industrial Pre-Catalyzed Water Based Epoxy, K46-151 Series, at 4.0 mils wet, 1.5 mils dry, per coat.

A. Two-Component Epoxy and Epoxy High Build Systems: Refer to Section 09 96 00 "High-Performance Coatings."
B. Acrylic/Alkyd System:
1. Prime Coat: S-W Pro Industrial Pro-Cryl Universal Primer, B66-310 Series, at

PART 6 - TO 10.0 MILS WET, 2.0 TO 4.0 MILS DRY.

6.1 Intermediate Coat: Water-based acrylic-alkyd, interior, matching topcoat.

A. Topcoat: Water-based acrylic-alkyd, semi-gloss, interior: S-W ProMar 200 Waterbased Acrylic-Alkyd Semi-Gloss, B34-8200 Series, at 4.0 mils wet, 1.7 mils dry, per coat.
B. Topcoat: Water-based acrylic-alkyd, gloss, interior: S-W ProMar 200 Waterbased Acrylic-Alkyd Gloss, B35-8200 Series, at 4.0 mils wet, 1.7 mils dry, per coat.
C. Gypsum Board Substrates:
1. Latex System:
a. Prime Coat: Primer, latex, interior: S-W ProMar 200 Zero VOC Latex Primer, B28W2600, at 4.0 mils wet, 1.5 mils dry.
b. Intermediate Coat: Latex, interior, matching topcoat.
c. Topcoat: Latex, interior, eggshell (Gloss Level 3): S-W ProMar 200 Zero VOC Latex Eg-Shel, B20-2600 Series, at 4.0 mils wet, 1.7 mils dry, per coat.

END OF SECTION

SECTION 10 28 13 - TOILET ACCESSORIES

PART 1 - GENERAL

1.1 SUMMARY

A. Section Includes:
   1. Public-use washroom accessories.
   2. Custodial accessories.

B. Related Requirements:
   1. Division 01 Specification Sections apply to Work of this Section.

1.2 COORDINATION

A. Coordinate accessory locations with other work to prevent interference with clearances required for access by people with disabilities, and for proper installation, adjustment, operation, cleaning, and servicing of accessories.

B. Deliver inserts and anchoring devices set into concrete or masonry as required to prevent delaying the Work.

1.3 ACTION SUBMITTALS

A. Product Data: For each type of product.
   1. Include construction details, material descriptions, dimensions of individual components and profiles, and finishes.
   2. Include anchoring and mounting requirements, including requirements for cutouts in other work and substrate preparation.
   3. Include electrical characteristics.

PART 2 - PRODUCTS

2.1 PERFORMANCE REQUIREMENTS

A. Electrical Components, Devices, and Accessories: Listed and labeled as defined in NFPA 70, by a qualified testing agency, and marked for intended location and application.

B. Structural Performance: Design accessories and fasteners to comply with the following requirements:
   1. Grab Bars: Installed units are able to resist 250 pound force concentrated load applied in any direction and at any point.

2.2 PUBLIC-USE WASHROOM ACCESSORIES

A. Source Limitations: Obtain public-use washroom accessories from single source from single manufacturer.

B. Toilet Tissue (Roll) Dispenser:
   1. Manufacturers: Subject to compliance with requirements, provide products by one of the following:
      a. American Specialties, Inc.
      b. Bobrick Washroom Equipment, Inc.
      c. Bradley Corporation.
   2. Description: Double-roll dispenser.
   3. Mounting: Surface mounted.
   4. Operation: Noncontrol delivery with standard spindle.
   5. Capacity: Designed for 4-1/2- or 5-inch-diameter tissue rolls.
   6. Material and Finish: Stainless steel, ASTM A480 No. 4 finish (satin).

C. Paper Towel (Folded) Dispenser:
   1. Manufacturers: Subject to compliance with requirements, provide products by one of the following:
      a. American Specialties, Inc.
      b. Bobrick Washroom Equipment, Inc.
      c. Bradley Corporation.
   2. Mounting: Surface mounted.
   3. Minimum Capacity: 400 C-fold or 525 multifold towels.
   4. Material and Finish: Stainless steel, ASTM A480 No. 4 finish (satin).
   5. Lockset: Tumbler type.
   6. Refill Indicator: Pierced slots at sides or front.

D. Soap Dispenser:
   1. Manufacturers: Subject to compliance with requirements, provide products by one of the following:
      a. American Specialties, Inc.
      b. Bobrick Washroom Equipment, Inc.
      c. Bradley Corporation.
   2. Description: Designed for manual operation and dispensing soap in liquid or lotion form.
   3. Mounting: Vertically oriented, surface mounted.
   4. Lockset: Tumbler type.
   5. Refill Indicator: Window type.

E. Grab Bar:
   1. Manufacturers: Subject to compliance with requirements, provide products by one of the following:
      a. American Specialties, Inc.
      b. Bobrick Washroom Equipment, Inc.
      c. Bradley Corporation.
   2. Mounting: Flanges with concealed fasteners.
   3. Material: Stainless steel, 0.05-inch-thick.
      a. Finish: Smooth, ASTM A480 No. 4 finish (satin) on ends and slip-resistant texture in grip area.
   4. Outside Diameter: 1-1/4 inches.
   5. Configuration and Length: As indicated on Drawings.

F. Mirror Unit:
1. Manufacturers: Subject to compliance with requirements, provide products by one of the following:
a. American Specialties, Inc.
b. Bobrick Washroom Equipment, Inc.
c. Bradley Corporation.
2. Frame: Stainless steel channel.
a. Corners: Manufacturer's standard.
3. Size: 24 by 36.

G. Hook:
1. Description: Double-prong unit.
2. Mounting: Concealed.
3. Material and Finish: Stainless steel, ASTM A480 No. 4 finish (satin).

2.3 CUSTODIAL ACCESSORIES

A. Custodial Utility Shelf:
1. Manufacturers: Subject to compliance with requirements, provide products by one of the following:
a. American Specialties, Inc.
b. Bobrick Washroom Equipment, Inc.
c. Bradley Corporation.
2. Description: With exposed edges turned down not less than 1/2-inch and supported by two triangular brackets welded to shelf underside.
3. Size: 30 inches long by 6 inches deep. Insert dimensions.
4. Material and Finish: Not less than nominal 0.05-inch-thick stainless steel, ASTM A480 No. 4 finish (satin).

B. Custodial Mop and Broom Holder:
1. Manufacturers: Subject to compliance with requirements, provide products by one of the following:
a. American Specialties, Inc.
b. Bobrick Washroom Equipment, Inc.
c. Bradley Corporation.
2. Description: Unit with holders,.
3. Mop/Broom Holders: Three, spring-loaded, rubber hat, cam type.
4. Material and Finish: Stainless steel, ASTM A480 No. 4 finish (satin).

C. Custodial Paper Towel (Folded) Dispenser:
1. Manufacturers: Subject to compliance with requirements, provide products by one of the following:
a. American Specialties, Inc.
b. Bobrick Washroom Equipment, Inc.
c. Bradley Corporation.
2. Mounting: Surface mounted.
3. Minimum Capacity: 400 C-fold or 525 multifold towels.
4. Material and Finish: Stainless steel, ASTM A480 No. 4 finish (satin).
5. Lockset: Tumbler type.
6. Refill Indicator: Pierced slots at sides or front.

2.4 MATERIALS

A. Steel Sheet: ASTM A1008, Designation CS (cold rolled, commercial steel), 0.036-inch-minimum nominal thickness.
B. Galvanized-Steel Sheet: ASTM A653, with G60 hot-dip zinc coating.
C. Galvanized-Steel Mounting Devices: ASTM A153, hot-dip galvanized after fabrication.
D. Fasteners: Screws, bolts, and other devices of same material as accessory unit, unless otherwise recommended by manufacturer or specified in this Section, and tamper and theft resistant where exposed, and of stainless or galvanized steel where concealed.
E. Mirrors: ASTM C1503, Mirror Glazing Quality, clear-glass mirrors, nominal 6.0 millmeters thick.

2.5 FABRICATION

A. General: Fabricate units with tight seams and joints, and exposed edges rolled. Hang doors and access panels with full-length, continuous hinges. Equip units for concealed anchorage and with corrosion-resistant backing plates.
B. Keys: Provide universal keys for internal access to accessories for servicing and resupplying. Provide minimum of twoInsert number keys to Owner's representative.

PART 3 - EXECUTION

3.1 INSTALLATION

A. Install accessories according to manufacturer's written instructions, using fasteners appropriate to substrate indicated and recommended by unit manufacturer. Install units level, plumb, and firmly anchored in locations and at heights indicated.
   1. Remove temporary labels and protective coatings.
B. Grab Bars: Install to comply with specified structural-performance requirements.
C. Shower Seats: Install to comply with specified structural-performance requirements.

3.2 ADJUSTING AND CLEANING

A. Adjust accessories for unencumbered, smooth operation. Replace damaged or defective items.
B. Clean and polish exposed surfaces according to manufacturer's written instructions.

END OF SECTION

SECTION 10 44 13 - FIRE PROTECTION CABINETS

PART 1 - GENERAL

1.1 SUMMARY

A. Section Includes:
   1. Fire-protection cabinets for the following:
      a. Portable fire extinguisher.

B. Related Requirements:
   1. Division 01 Specification Sections apply to Work of this Section.
   2. Section 10 44 16 "Fire Extinguishers" for portable, hand-carried fire extinguishers accommodated by fire-protection cabinets

1.2 ACTION SUBMITTALS

A. Product Data: For each type of product.
   1. Show door hardware, cabinet type, trim style, and panel style. Include roughing-in dimensions and details showing recessed-, semirecessed-, or surface-mounting method and relationships of box and trim to surrounding construction.

B. Shop Drawings: For fire-protection cabinets.
   1. Include plans, elevations, sections, details, and attachments to other Work.

1.3 COORDINATION

A. Coordinate size of fire-protection cabinets to ensure that type and capacity of fire extinguishers indicated are accommodated.

B. Coordinate sizes and locations of fire-protection cabinets with wall depths.

PART 2 - PRODUCTS

2.1 MANUFACTURERS

A. Source Limitations: Obtain fire-protection cabinets, accessories, and fire extinguishers from single source from single manufacturer.

2.2 PERFORMANCE REQUIREMENTS

A. Fire-Rated Fire-Protection Cabinets: Listed and labeled to comply with requirements in ASTM E814 for fire-resistance rating of walls where they are installed.

2.3 FIRE-PROTECTION CABINET (FEC)

A. Cabinet Type: Suitable for fire extinguisher.
   1. Manufacturers: Subject to compliance with requirements, provide products by one of the following:
      a. Activar Construction Products Group, Inc. - JL Industries.
      b. Larsens Manufacturing Company.
      c. Potter Roemer LLC; a Division of Morris Group International.

B. Fire-Rated Cabinets: Refer to drawings for fire ratings.
C. Cabinet Material: Cold-rolled steel sheet.
D. Semirecessed Cabinet: One-piece combination trim and perimeter door frame overlapping surrounding wall surface, with exposed trim face and wall return at outer edge (backbend).
E. Cabinet Trim and Door Material: Steel sheet.
F. Door Style: Fully glazed panel with frame.
G. Door Glazing: Tempered float glass (clear).
H. Door Hardware: Manufacturer's standard door-operating hardware of proper type for cabinet type, trim style, and door material and style indicated. Provide manufacturer's standard hinge, permitting door to open 180 degrees.
I. Accessories:
    1. Identification: Verify lettering with authorities having jurisdiction for letter style, size, spacing, and location.
        a. Identify fire extinguisher in fire-protection cabinet with the words "FIRE EXTINGUISHER."
            1) Location: Applied to cabinet door.
            2) Lettering Color: Red.
            3) Orientation: Vertical.
J. Materials:
    1. Cold-Rolled Steel: ASTM A1008, Commercial Steel (CS), Type B.
        a. Finish: Baked enamel, TGIC polyester powder coat, HAA polyester powder coat, epoxy powder coat, or polyester/epoxy hybrid powder coat, complying with AAMA 2603.
        b. Color: As selected by Architect from manufacturer's standard range.
    2. Tempered Float Glass: ASTM C1048, Kind FT, Condition A, Type I, Quality q3, 3 millimeters thick, Class 1 (clear).

2.4 FABRICATION

A. Fire-Protection Cabinets: Provide manufacturer's standard box (tub) with trim, frame, door, and hardware to suit cabinet type, trim style, and door style indicated.
    1. Weld joints and grind smooth.
    2. Miter corners and grind smooth.
    3. Provide factory-drilled mounting holes.
B. Cabinet Doors: Fabricate doors according to manufacturer's standards, from materials indicated and coordinated with cabinet types and trim styles.
    1. Fabricate door frames with tubular stiles and rails and hollow-metal design, minimum 1/2-inch thick.
    2. Miter and weld perimeter door frames and grind smooth.
C. Cabinet Trim: Fabricate cabinet trim in one piece with corners mitered, welded, and ground smooth.

2.5 GENERAL FINISH REQUIREMENTS

A. Comply with NAAMM's AMP 500, "Metal Finishes Manual for Architectural and Metal Products," for recommendations for applying and designating finishes.
B. Protect mechanical finishes on exposed surfaces of fire-protection cabinets from damage by applying a strippable, temporary protective covering before shipping.

C. Finish fire-protection cabinets after assembly.
D. Appearance of Finished Work: Noticeable variations in same piece are unacceptable. Variations in appearance of adjoining components are acceptable if they are within the range of approved Samples and are assembled or installed to minimize contrast.

PART 3 - EXECUTION

3.1 EXAMINATION

A. Examine walls and partitions for suitable framing depth and blocking where semi-recessed cabinets will be installed.
B. Proceed with installation only after unsatisfactory conditions have been corrected.

3.2 PREPARATION

A. Prepare recesses for semirecessed fire-protection cabinets as required by type and size of cabinet and trim style.

3.3 INSTALLATION

A. General: Install fire-protection cabinets in locations and at mounting heights indicated in Drawings. If not indicated in Drawings, at height indicated below:
   1. General Fire-Protection Cabinet Mounting Height: 42 inches above finished floor to top of fire extinguisher.

B. Fire-Protection Cabinets: Fasten cabinets to structure, square and plumb.
   1. Fasten mounting brackets to inside surface of fire-protection cabinets, square and plumb.

3.4 ADJUSTING AND CLEANING

A. Remove temporary protective coverings and strippable films, if any, as fire-protection cabinets are installed unless otherwise indicated in manufacturer's written installation instructions.
B. Adjust fire-protection cabinet doors to operate easily without binding. Verify that integral locking devices operate properly.
C. On completion of fire-protection cabinet installation, clean interior and exterior surfaces as recommended by manufacturer.
D. Touch up marred finishes, or replace fire-protection cabinets that cannot be restored to factory-finished appearance. Use only materials and procedures recommended or furnished by fire-protection cabinet and mounting bracket manufacturers.
E. Replace fire-protection cabinets that have been damaged or have deteriorated beyond successful repair by finish touchup or similar minor repair procedures.

END OF SECTION

SECTION 10 44 16 - FIRE EXTINGUISHERS

PART 1 - GENERAL

1.1 SUMMARY

A. Section includes portable, hand-carried fire extinguishers.
B. Related Requirements:
   1. Divisions 01 Specification Sections apply to Work of this Section.

1.2 ACTION SUBMITTALS

A. Product Data: For each type of product. Include rating and classification, material descriptions, dimensions of individual components and profiles, and finishes for fire extinguisher.

1.3 CLOSEOUT SUBMITTALS

A. Operation and Maintenance Data: For fire extinguishers to include in maintenance manuals.

PART 2 - PRODUCTS

2.1 PERFORMANCE REQUIREMENTS

A. NFPA Compliance: Fabricate and label fire extinguishers to comply with NFPA 10, "Portable Fire Extinguishers."
B. Fire Extinguishers: Listed and labeled for type, rating, and classification by an independent testing agency acceptable to authorities having jurisdiction.

2.2 PORTABLE, HAND-CARRIED FIRE EXTINGUISHERS

A. Fire Extinguishers: Type, size, and capacity for each indicated.
   1. Manufacturers: Subject to compliance with requirements, provide products by one of the following:
      a. JL Industries, Inc.; a division of the Activar Construction Products Group.
      b. Larsens Manufacturing Company.
      c. Potter Roemer LLC.
   2. Handles and Levers: Manufacturer's standard.
B. Multipurpose Dry-Chemical Type in Steel Container: UL-rated 4-A:60-B:C, 10-pound nominal capacity, with monoammonium phosphate-based dry chemical in enameled-steel container.

PART 3 - EXECUTION

3.1 EXAMINATION

A. Examine fire extinguishers for proper charging and tagging.
B. Proceed with installation only after unsatisfactory conditions have been corrected.

3.2 INSTALLATION

A. General: Install fire extinguishers in locations indicated and in compliance with requirements of authorities having jurisdiction.

END OF SECTION

SECTION 13 34 19 - METAL BUILDING SYSTEMS

PART 1 - GENERAL

1.1 SUMMARY

A. Section Includes:
   1. Structural-steel framing.
   2. Metal roof panels.
   3. Metal wall panels.
   4. Thermal insulation.
   5. Accessories.

1.2 PREINSTALLATION MEETINGS

A. Preinstallation Conference: Conduct conference at Project Site.

1.3 ACTION SUBMITTALS

A. Product Data: For each type of metal building system component.
B. Shop Drawings: Indicate components by others. Include full building plan, elevations, sections, details and attachments to other work.
C. Delegated Design Submittals: For metal building systems.
   1. Include analysis data indicating compliance with performance requirements and design data signed and sealed by the qualified professional engineer responsible for their preparation.

1.4 WARRANTY

A. Special Warranty on Metal Panel Finishes: Manufacturer agrees to repair finish or replace metal panels that show evidence of deterioration of factory-applied finishes within specified warranty period.
   1. Finish Warranty Period: 20 years from date of Substantial Completion.
B. Special Weathertightness Warranty for Standing-Seam Metal Roof Panels: Manufacturer agrees to repair or replace standing-seam metal roof panel assemblies that leak or otherwise fail to remain weathertight within specified warranty period.
   1. Warranty Period: 20 years from date of Substantial Completion.

PART 2 - PRODUCTS

2.1 MANUFACTURERS

A. Manufacturers: Subject to compliance with requirements, available manufacturers offering products that may be incorporated into the Work include, but are not limited to, the following:
   1. ACI Building Systems, Inc.
   2. Nucor Corporation, Nucor Buildings Group.
   3. Standard Structures, Inc. (SSI).

2.2 PERFORMANCE REQUIREMENTS

A. Delegated Design: Engage a qualified professional engineer, as defined in Section 01 40 00 "Quality Requirements," to design metal building system.

B. Structural Performance: Metal building systems to withstand the effects of gravity loads and the following loads and stresses within limits and under conditions indicated according to procedures in MBMA's "Metal Building Systems Manual."
   1. Design Loads: As indicated on Drawings.
   2. Deflection and Drift Limits:
      a. Design metal building system assemblies to withstand serviceability design loads without exceeding deflections and drift limits recommended in AISC Steel Design Guide No. 3 "Serviceability Design Considerations for Steel Buildings."

C. Thermal Movements: Allow for thermal movements from ambient and surface temperature changes by preventing buckling, opening of joints, overstressing of components, failure of joint sealants, failure of connections, and other detrimental effects. Base calculations on surface temperatures of materials due to both solar heat gain and nighttime-sky heat loss.
   1. Temperature Change: 120 degrees F, ambient; 180 degrees F, material surfaces.

D. Structural Performance for Metal Roof and Wall Panels: Provide metal panel systems capable of withstanding the effects of the following loads, based on testing according to ASTM E1592:
   1. Wind Loads: As indicated on Drawings.

E. Air Infiltration for Metal Roof Panels: Air leakage of not more than 0.06 cubic feet per minute/square feet when tested according to ASTM E1680 or ASTM E283 at the following test-pressure difference:
   1. Test-Pressure Difference: 1.57 pound force per square feet.

F. Air Infiltration for Metal Wall Panels: Air leakage of not more than 0.06 cubic feet per minutes/square feet when tested according to ASTM E283 at the following test-pressure difference:
   1. Test-Pressure Difference: 1.57 pound force per square feet.

G. Water Penetration for Metal Roof Panels: No water penetration when tested according to ASTM E1646 or ASTM E331 at the following test-pressure difference:
   1. Test-Pressure Difference: 2.86 lbf/square feet.

H. Water Penetration for Metal Wall Panels: No water penetration when tested according to ASTM E331 at the following test-pressure difference:
   1. Test-Pressure Difference: 2.86 pound force per square feet.

I. Thermal Performance for Opaque Elements: Provide the following maximum U-factors and minimum R-values when tested according to ASTM C1363 or ASTM C518:
   1. Roof:
      a. R-Value: <R-19+R-11>.
   2. Walls:
      a. U-Factor: <.079>.

2.3 METAL ROOF PANELS

A. Exposed Fastener, Tapered-Rib, Metal Roof Panels: Formed with raised, trapezoidal major ribs and intermediate stiffening ribs symmetrically spaced between major ribs; designed to be installed by lapping side edges of adjacent panels and mechanically attaching panels to supports using exposed fasteners in side laps.

1. Material: Zinc-coated (galvanized) or aluminum-zinc alloy-coated steel sheet, nominal uncoated steel thickness. Prepainted by the coil-coating process to comply with ASTM A755.
   a. Exterior Finish: Siliconized polyester.
   b. Color: As selected by Architect from manufacturer's full range.
2. Major-Rib Spacing: 12 inches on center
3. Panel Coverage: 36 inches.
4. Panel Height: 1.25 inches.

2.4 METAL WALL PANELS

A. Exposed-Fastener, Tapered-Rib, Metal Wall Panels: Formed with raised, trapezoidal major ribs and between major ribs; designed to be installed by lapping side edges of adjacent panels and mechanically attaching panels to supports using exposed fasteners in side laps.
   1. Material: Zinc-coated (galvanized) or aluminum-zinc alloy-coated steel sheet, nominal uncoated steel thickness. Prepainted by the coil-coating process to comply with ASTM A755.
      a. Exterior Finish: Siliconized polyester.
      b. Color: As selected by Architect from manufacturer's full range.
   2. Major-Rib Spacing: 6 inches on center
   3. Panel Coverage: 36 inches.
   4. Panel Height: 1.5 inches.

2.5 THERMAL INSULATION

A. Faced Metal Building Insulation: ASTM C991, Type II, glass-fiber-blanket insulation; 0.5-pound per cubic foot density; 2-inch-wide, continuous, vapor-tight edge tabs; with a flame-spread index of 25 or less.

2.6 ACCESSORIES

A. General: Provide accessories as standard with metal building system manufacturer and as specified. Fabricate and finish accessories at the factory to greatest extent possible, by manufacturer's standard procedures and processes. Comply with indicated profiles and with dimensional and structural requirements.
   1. Form exposed sheet metal accessories that are without excessive oil-canning, buckling, and tool marks and that are true to line and levels indicated, with exposed edges folded back to form hems.

B. Roof Panel Accessories: Provide components required for a complete metal roof panel assembly including copings, fasciae, corner units, ridge closures, clips, sealants, gaskets, fillers, closure strips, and similar items. Match material and finish of metal roof panels unless otherwise indicated.

C. Wall Panel Accessories: Provide components required for a complete metal wall panel assembly including copings, fasciae, mullions, sills, corner units, clips, sealants, gaskets, fillers, closure strips, and similar items. Match material and finish of metal wall panels unless otherwise indicated.

D. Flashing and Trim: Zinc-coated (galvanized) or aluminum-zinc alloy-coated steel sheet, 0.018-inch nominal uncoated steel thickness, prepainted with coil coating; finished to match adjacent metal panels.

E. Gutters: Zinc-coated (galvanized) or aluminum-zinc alloy-coated steel sheet, 0.018-inch nominal uncoated steel thickness, prepainted with coil coating; finished to match roof fascia and rake trim. Match profile of gable trim, complete with end pieces, outlet tubes, and other special pieces as required. Fabricate in minimum 96-inch-long sections, sized according to SMACNA's "Architectural Sheet Metal Manual."
   1. Gutter Supports: Fabricated from same material and finish as gutters.
   2. Strainers: Bronze, copper, or aluminum wire ball type at outlets.

F. Downspouts: Zinc-coated (galvanized) or aluminum-zinc alloy-coated steel sheet, 0.018-inch nominal uncoated steel thickness, prepainted with coil coating; finished to match metal wall panels. Fabricate in minimum 10-foot-long sections, complete with formed elbows and offsets.
   1. Mounting Straps: Fabricated from same material and finish as gutters.

2.7 FABRICATION

A. General: Design components and field connections required for erection to permit easy assembly.
   1. Mark each piece and part of the assembly to correspond with previously prepared erection drawings, diagrams, and instruction manuals.
   2. Fabricate structural framing to produce clean, smooth cuts and bends. Punch holes f proper size, shape, and location. Members to be free of cracks, tears, and ruptures.

B. Tolerances: Comply with MBMA's "Metal Building Systems Manual" for fabrication and erection tolerances.

C. Primary Framing: Shop fabricate framing components to indicated size and section, with baseplates, bearing plates, stiffeners, and other items required for erection welded into place. Cut, form, punch, drill, and weld framing for bolted field assembly.

D. Secondary Framing: Shop fabricate framing components to indicated size and section by roll forming or break forming, with baseplates, bearing plates, stiffeners, and other plates required for erection welded into place. Cut, form, punch, drill, and weld secondary framing for bolted field connections to primary framing.

E. Metal Panels: Fabricate and finish metal panels at the factory to greatest extent possible, by manufacturer's standard procedures and processes, as necessary to fulfill indicated performance requirements. Comply with indicated profiles and with dimensional and structural requirements.
   1. Provide panel profile, including major ribs and intermediate stiffening ribs, if any, for full length of metal panel.

2.8 SOURCE QUALITY CONTROL

A. Special Inspection: Owner will engage a qualified special inspector to perform source quality control inspections and to submit reports.
   1. Accredited Manufacturers: Special inspections will not be required if fabrication is performed by an IAS AC472-accredited manufacturer approved by authorities having jurisdiction to perform such Work without special inspection.

B. Product will be considered defective if it does not pass tests and inspections.

C. Prepare test and inspection reports.

PART 3 - EXECUTION

3.1 METAL PANEL INSTALLATION, GENERAL

A. General: Anchor metal panels and other components of the Work securely in place, with provisions for thermal and structural movement.
   1. Field cut metal panels as required for doors, windows, and other openings. Cut openings as small as possible, neatly to size required, and without damage to adjacent metal panel finishes.
      a. Field cutting of metal panels by torch is not permitted unless approved in writing by manufacturer.
   2. Install metal panels perpendicular to structural supports unless otherwise indicated.
   3. Flash and seal metal panels with weather closures at perimeter of openings and similar elements. Fasten with self-tapping screws.
   4. Locate and space fastenings in uniform vertical and horizontal alignment.
   5. Locate metal panel splices over structural supports with end laps in alignment.
   6. Lap metal flashing over metal panels to allow moisture to run over and off the material.

B. Lap-Seam Metal Panels: Install screw fasteners using power tools with controlled torque adjusted to compress EPDM washers tightly without damage to washers, screw threads, or metal panels. Install screws in predrilled holes.
   1. Arrange and nest side-lap joints so prevailing winds blow over, not into, lapped joints. Lap ribbed or fluted sheets one full rib corrugation. Apply metal panels and associated items for neat and weathertight enclosure. Avoid "panel creep" or application not true to line.

C. Metal Protection: Where dissimilar metals contact each other or corrosive substrates, protect against galvanic action by painting contact surfaces with corrosion-resistant coating, by applying rubberized-asphalt underlayment to each contact surface, or by other permanent separation as recommended by metal roof panel manufacturer.

D. Joint Sealers: Install gaskets, joint fillers, and sealants where indicated and where required for weatherproof performance of metal panel assemblies. Provide types of gaskets, fillers, and sealants indicated; or, if not indicated, provide types recommended by metal panel manufacturer.
   1. Seal metal panel end laps with double beads of tape or sealant the full width of panel. Seal side joints where recommended by metal panel manufacturer.
   2. Prepare joints and apply sealants to comply with requirements in Section 07 92 00 "Joint Sealants."

3.2 METAL ROOF PANEL INSTALLATION

A. General: Provide metal roof panels of full length from eave to ridge unless otherwise indicated or restricted by shipping limitations.
   1. Install ridge caps as metal roof panel work proceeds.
   2. Flash and seal metal roof panels with weather closures at eaves and rakes. Fasten with self-tapping screws.

B. Lap-Seam Metal Roof Panels: Fasten metal roof panels to supports with exposed fasteners at each lapped joint, at location and spacing recommended by manufacturer.
   1. Provide metal-backed sealing washers under heads of exposed fasteners bearing on weather side of metal roof panels.

2. Provide sealant tape at lapped joints of metal roof panels and between panels and protruding equipment, vents, and accessories.
3. Apply a continuous ribbon of sealant tape to weather-side surface of fastenings on end laps and on side laps of nesting-type metal panels, on side laps of ribbed or fluted metal panels, and elsewhere as needed to make metal panels weatherproof to driving rains.
4. At metal panel splices, nest panels with minimum 6-inch end lap, sealed with butyl-rubber sealant and fastened together by interlocking clamping plates.

C. Metal Fascia Panels: Align bottom of metal panels and fasten with blind rivets, bolts, or self-drilling or self-tapping screws. Flash and seal metal panels with weather closures where fasciae meet soffits, along lower panel edges, and at perimeter of all openings.

3.3 METAL WALL PANEL INSTALLATION

A. General: Install metal wall panels in orientation, sizes, and locations indicated on Drawings. Install panels perpendicular to girts, extending full height of building, unless otherwise indicated. Anchor metal wall panels and other components of the Work securely in place, with provisions for thermal and structural movement.
1. Unless otherwise indicated, begin metal panel installation at corners with center of rib lined up with line of framing.
2. Shim or otherwise plumb substrates receiving metal wall panels.
3. When two rows of metal panels are required, lap panels 4 inches minimum.
4. When building height requires two rows of metal panels at gable ends, align lap of gable panels over metal wall panels at eave height.
5. Rigidly fasten base end of metal wall panels and allow eave end free movement for thermal expansion and contraction. Predrill panels.
6. Flash and seal metal wall panels with weather closures at eaves and rakes, and at perimeter of all openings. Fasten with self-tapping screws.
7. Install screw fasteners in predrilled holes.
8. Install flashing and trim as metal wall panel work proceeds.
9. Apply elastomeric sealant continuously between metal base channel (sill angle) and concrete, and elsewhere as indicated on Drawings; if not indicated, as necessary for waterproofing.
10. Align bottom of metal wall panels and fasten with blind rivets, bolts, or self-drilling or self-tapping screws.
11. Provide weatherproof escutcheons for pipe and conduit penetrating exterior walls.

B. Metal Wall Panels: Install metal wall panels on exterior side of girts. Attach metal wall panels to supports with fasteners as recommended by manufacturer.

3.4 THERMAL INSULATION INSTALLATION

A. General: Install insulation concurrently with metal panel installation, in thickness indicated to cover entire surface, according to manufacturer's written instructions.
1. Set vapor-retarder-faced units with vapor retarder toward warm side of construction unless otherwise indicated. Do not obstruct ventilation spaces except for firestopping.
2. Tape joints and ruptures in vapor retarder, and seal each continuous area of insulation to the surrounding construction to ensure airtight installation.

3. Install factory-laminated, vapor-retarder-faced blankets straight and true in one-piece lengths, with both sets of facing tabs sealed, to provide a complete vapor retarder.
4. Install blankets straight and true in one-piece lengths. Install vapor retarder over insulation, with both sets of facing tabs sealed, to provide a complete vapor retarder.

B. Blanket Roof Insulation: Comply with the following installation method:
1. Over-Framing Installation: Extend insulation and vapor retarder over and perpendicular to top flange of secondary framing. Hold in place by metal roof panels fastened to secondary framing.
2. Between-Purlin Installation: Extend insulation and vapor retarder between purlins. Carry vapor-retarder-facing tabs up and over purlin, overlapping adjoining facing of next insulation course and maintaining continuity of retarder. Hold in place with bands and crossbands below insulation.
3. Over-Purlin-with-Spacer-Block Installation: Extend insulation and vapor retarder over and perpendicular to top flange of secondary framing. Install layer of filler insulation over first layer to fill space formed by metal roof panel standoffs. Hold in place by panels fastened to standoffs.
   a. Thermal Spacer Blocks: Where metal roof panels attach directly to purlins, install thermal spacer blocks.
4. Two-Layers-between-Purlin-with-Spacer-Block Installation: Extend insulation and vapor retarder between purlins. Carry vapor-retarder-facing tabs up and over purlin, overlapping adjoining facing of next insulation course and maintaining continuity of retarder. Install layer of filler insulation over first layer to fill space between purlins formed by thermal spacer blocks. Hold in place with bands and crossbands below insulation.
   a. Thermal Spacer Blocks: Where metal roof panels attach directly to purlins, install thermal spacer blocks.
5. Retainer Strips: Install retainer strips at each longitudinal insulation joint, straight and taut, nesting with secondary framing to hold insulation in place.

C. Blanket Wall Insulation: Extend insulation and vapor retarder over and perpendicular to top flange of secondary framing. Hold in place by metal wall panels fastened to secondary framing.
1. Retainer Strips: Install retainer strips at each longitudinal insulation joint, straight and taut, nesting with secondary framing to hold insulation in place.

3.5 ACCESSORY INSTALLATION

A. General: Install accessories with positive anchorage to building and weathertight mounting, and provide for thermal expansion. Coordinate installation with flashings and other components.
1. Install components required for a complete metal roof panel assembly, including trim, copings, ridge closures, seam covers, flashings, sealants, gaskets, fillers, closure strips, and similar items.
2. Install components for a complete metal wall panel assembly, including trim, copings, corners, seam covers, flashings, sealants, gaskets, fillers, closure strips, and similar items.
3. Where dissimilar metals contact each other or corrosive substrates, protect against galvanic action by painting contact surfaces with corrosion-resistant coating, by applying rubberized-asphalt underlayment to each contact surface, or by other permanent separation as recommended by manufacturer.

B. Flashing and Trim: Comply with performance requirements, manufacturer's written installation instructions, and SMACNA's "Architectural Sheet Metal Manual." Provide concealed fasteners where possible, and set units true to line and level. Install work with laps, joints, and seams that will be permanently watertight and weather resistant.
   1. Install exposed flashing and trim that is without excessive oil-canning, buckling, and tool marks and that is true to line and levels indicated, with exposed edges folded back to form hems. Install sheet metal flashing and trim to fit substrates and to result in waterproof and weather-resistant performance.
   2. Expansion Provisions: Provide for thermal expansion of exposed flashing and trim. Space movement joints at a maximum of 10 feet with no joints allowed within 24 inches of corner or intersection. Where lapped or bayonet-type expansion provisions cannot be used or would not be sufficiently weather resistant and waterproof, form expansion joints of intermeshing hooked flanges, not less than 1 inch deep, filled with mastic sealant (concealed within joints).

C. Gutters: Join sections with riveted-and-soldered or lapped-and-sealed joints. Attach gutters to eave with gutter hangers spaced as required for gutter size, but not more than 36 inches on center using manufacturer's standard fasteners. Provide end closures and seal watertight with sealant. Provide for thermal expansion.

D. Downspouts: Join sections with 1-1/2-inch telescoping joints. Provide fasteners designed to hold downspouts securely 1 inch away from walls; locate fasteners at top and bottom and at approximately 60 inches on center in between.
   1. Provide elbows at base of downspouts to direct water away from building.
   2. Tie downspouts to underground drainage system indicated.

3.6 FIELD QUALITY CONTROL

A. Special Inspections: Owner will engage a qualified special inspector to perform field quality control special inspections and to submit reports.

B. Product will be considered defective if it does not pass tests and inspections.

C. Prepare test and inspection reports.

END OF SECTION

SECTION 22 05 29 - HANGERS AND SUPPORTS FOR PLUMBING PIPING AND EQUIPMENT

PART 1 - GENERAL

1.1 SUMMARY

A. Section Includes:
   1. Pipe hangers and supports.
   2. Hanger rods.
   3. Equipment curbs.
   4. Formed steel channel.
   5. Equipment bases and supports.

B. Related Sections:
   1. Division 01 Specification Sections apply to Work of this Section.

1.2 REFERENCES

A. American Society of Mechanical Engineers:
   1. ASME B31.1 - Power Piping.
   2. ASME B31.5 - Refrigeration Piping.
   3. ASME B31.9 - Building Services Piping.

B. ASTM International:
   1. ASTM E84 - Standard Test Method for Surface Burning Characteristics of Building Materials.
   2. ASTM E119 - Standard Test Methods for Fire Tests of Building Construction and Materials.
   3. ASTM E814 - Standard Test Method for Fire Tests of Through Penetration Fire Stops.
   4. ASTM F708 - Standard Practice for Design and Installation of Rigid Pipe Hangers.

C. American Welding Society:
   1. AWS D1.1 - Structural Welding Code - Steel.

D. FM Global:
   1. FM - Approval Guide, A Guide to Equipment, Materials & Services Approved By Factory Mutual Research For Property Conservation.

E. Manufacturers Standardization Society of the Valve and Fittings Industry:
   1. MSS SP 58 - Pipe Hangers and Supports - Materials, Design and Manufacturer.
   2. MSS SP 69 - Pipe Hangers and Supports - Selection and Application.
   3. MSS SP 89 - Pipe Hangers and Supports - Fabrication and Installation Practices.

1.3 SUBMITTALS

A. Division 01 and Section 23 05 00 "General Mechanical Requirements."

B. Shop Drawings: Indicate system layout with location including critical dimensions, sizes, and pipe hanger and support locations and detail of trapeze hangers.

C. Product Data:
   1. Hangers and Supports: Submit manufacturers catalog data including load capacity.

D. Design Data: Indicate load carrying capacity of trapeze, multiple pipe, and riser support hangers.
E. Manufacturer's Installation Instructions:
   1. Hangers and Supports: Submit special procedures and assembly of components.
F. Manufacturer's Certificate: Certify products meet or exceed specified requirements.

1.4 QUALITY ASSURANCE

A. Perform Work in accordance with AWS D1.1 for welding hanger and support attachments to building structure.
B. Perform Work in accordance with State and local standards.

1.5 QUALIFICATIONS

A. Manufacturer: Company specializing in manufacturing Products specified in this section with minimum 3 years' experience.
B. Installer: Company specializing in performing Work of this section with minimum 3 years' experience.

1.6 DELIVERY, STORAGE, AND HANDLING

A. Accept materials on site in original factory packaging, labeled with manufacturer's identification.
B. Protect from weather and construction traffic, dirt, water, chemical, and damage, by storing in original packaging.

1.7 FIELD MEASUREMENTS

A. Verify field measurements prior to fabrication.

1.8 WARRANTY

A. Section 23 05 00 "General Mechanical Requirements."

PART 2 - PRODUCTS

2.1 PIPE HANGERS AND SUPPORTS
A. Plumbing Piping - DWV:
   1. Conform to ASME B31.9, ASTM F708, MSS SP58, MSS SP69, or MSS SP89.
   2. Hangers for Pipe Sizes 1/2- to 1-1/2 inch: Malleable iron or Carbon steel, adjustable swivel, split ring.
   3. Hangers for Pipe Sizes 2 inches and Larger: Carbon steel, adjustable, clevis.
   4. Multiple or Trapeze Hangers: Steel channels with welded spacers and hanger rods.
   5. Wall Support for Pipe Sizes 3 inches and Smaller: Cast iron hook.
   6. Wall Support for Pipe Sizes 4 inches and Larger: Welded steel bracket and wrought steel clamp.
   7. Vertical Support: Steel riser clamp.
   8. Floor Support: Cast iron adjustable pipe saddle, lock nut, nipple, floor flange, and concrete pier or steel support.
   9. Copper Pipe Support: Copper-plated, carbon-steel adjustable, ring.

B. Plumbing Piping - Water:
   1. Conform to ASME B31.9, ASTM F708, MSS SP58, MSS SP69, or MSS SP89.
   2. Hangers for Pipe Sizes 1/2- to 1-1/2 inch: Malleable iron or Carbon steel, adjustable swivel, split ring.
   3. Hangers for Cold Pipe Sizes 2 inches and Larger: Carbon steel, adjustable, clevis.
   4. Hangers for Hot Pipe Sizes 2 to 4 inches: Carbon steel, adjustable, clevis.
   5. Multiple or Trapeze Hangers: Steel channels with welded spacers and hanger rods.
   6. Wall Support for Pipe Sizes 3 inches and Smaller: Cast iron hook.
   7. Wall Support for Pipe Sizes 4 inches and Larger: Welded steel bracket and wrought steel clamp.
   8. Vertical Support: Steel riser clamp.
   9. Floor Support for Cold Pipe: Cast iron adjustable pipe saddle, lock nut, nipple, floor flange, and concrete pier or steel support.
   10. Floor Support for Hot Pipe Sizes 4 inches and Smaller: Cast iron adjustable pipe saddle, lock nut, nipple, floor flange, and concrete pier or steel support.
   11. Copper Pipe Support: Copper-plated, Carbon-steel ring.

2.2 ACCESSORIES

A. Hanger Rods: Mild steel threaded both ends, threaded on one end, or continuous threaded.

2.3 EQUIPMENT CURBS

A. Fabrication: Unless otherwise noted, shall be welded 18 gauge galvanized steel shell and base, mitered 3-inch cant, variable step to match roof insulation, 1-1/2-inch thick insulation, factory installed wood nailer. Provide tapered curbs to match roof slope.

2.4 FORMED STEEL CHANNEL

A. Manufacturers:
   1. B-line, an Eaton business.
   2. Unistrut; Part of Atkore International.
   3. Substitutions: See Section 23 05 00 "General Mechanical Requirements."
B. Product Description: Galvanized 12 gage thick steel. With holes 1-1/2 inches on center.

PART 3 - EXECUTION

3.1 EXAMINATION

A. Verify the existing conditions before starting work.
B. Verify openings are ready to receive sleeves.
C. Verify openings are ready to receive firestopping.

3.2 PREPARATION

A. Obtain permission from Architect before using powder-actuated anchors.
B. Do not drill or cut structural members without obtaining permission from Architect.

3.3 INSTALLATION - PIPE HANGERS AND SUPPORTS

A. Install in accordance with ASME B31.1, ASME B31.5, ASME 31.9, ASTM F708,MSS SP 58, MSS SP 69, or MSS SP 89.
B. Support horizontal piping as scheduled.
C. Install hangers with minimum 1/2-inch space between finished covering and adjacent work.
D. Place hangers within 12 inches of each horizontal elbow.
E. Use hangers with 1-1/2-inch minimum vertical adjustment.
F. Support horizontal cast iron pipe adjacent to each hub, with 5 feet maximum spacing between hangers.
G. Support vertical piping at every floor. Support vertical cast iron pipe at each floor at hub.
H. Where piping is installed in parallel and at same elevation, provide multiple pipe or trapeze hangers.
I. Support riser piping independently of connected horizontal piping.
J. Provide copper plated hangers and supports for copper piping.
K. Design hangers for pipe movement without disengagement of supported pipe.
L. Prime coat exposed steel hangers and supports. Refer to Section 09 90 00 "Painting and Coating. Hangers and supports located in crawl spaces, pipe shafts, and suspended ceiling spaces are not considered exposed.
M. Provide clearance in hangers and from structure and other equipment for installation of insulation. Refer to Section 23 07 05 "HVAC and Plumbing Insulation."

3.4 INSTALLATION - EQUIPMENT BASES AND SUPPORTS

A. Provide housekeeping pads of concrete, minimum 4 inches thick and extending 6 inches beyond supported equipment. Refer to Section 03 30 00 "Cast-In-Place Concrete."
B. Using templates furnished with equipment, install anchor bolts, and accessories for mounting and anchoring equipment.
C. Construct supports of steel members, formed steel channel, or steel pipe and fittings. Brace and fasten with flanges bolted to structure.
D. Provide rigid anchors for pipes after vibration isolation components are installed.

3.5 INSTALLATION - FLASHING

A. Provide flexible flashing and metal counterflashing where piping penetrates weather or waterproofed walls, floors, and roofs.
B. Flash vent and soil pipes projecting 3 inches minimum above finished roof surface with lead worked 1-inch minimum into hub, 8 inches minimum clear on sides with
24- by 24-inch sheet size. For pipes through outside walls, turn flanges back into wall and caulk, metal counter-flash, and seal.
C. Flash floor drains in floors with topping over finished areas with lead, 10 inches clear on sides with minimum 36- by 36-inch sheet size. Fasten flashing to drain clamp device.
D. Seal floor drains watertight to adjacent materials.
E. Adjust storm collars tight to pipe with bolts; caulk around top edge. Use storm collars above roof jacks. Screw vertical flange section to face of curb.

3.6 FIELD QUALITY CONTROL

A. Inspect installed firestopping for compliance with specifications and submitted schedule.

3.7 CLEANING

A. Clean adjacent surfaces of firestopping materials.

3.8 PROTECTION OF FINISHED WORK

A. Protect adjacent surfaces from damage by material installation.

3.9 SCHEDULES

A. Pipe Hanger Spacing:

Pipe Size (inches)	Max. Hanger Spacing (feet)	Hanger Rod Diameter (inches)
1/2	6	3/8
3/4	6	3/8
1	6	3/8
1 1/4	6	3/8
1 1/2	10	3/8
2	10	3/8
2 1/2	10	1/2
3	10	1/2
4	10	5/8
6	10	3/4
8	10	3/4
PVC (all sizes)	4	3/8
C.I. Bell and Spigot (or No-Hub) and at Joints	5	5/8

END OF SECTION

SECTION 22 11 00 - FACILITY WATER DISTRIBUTION

PART 1 - GENERAL

1.1 SUMMARY

A. Section Includes:
   1. Domestic water piping, within 5 feet of building.
   2. Domestic water piping, above grade.
   3. Unions and flanges.
   4. Valves.
   5. Pressure gauges.
   6. Pressure gage taps.
   7. Thermometers.
   8. Relief valves.
   9. Strainers.
   10. Water hammer arrestors.
   11. Mixing valves.
   12. Diaphragm-type compression tanks.

B. Related Sections:
   1. Section 03 30 00 "Cast-In-Place Concrete:" Execution requirements for placement of concrete house keeping pads specified by this section.
   2. Section 22 05 29 "Hangers and Supports" for Plumbing Piping and Equipment: Product requirements for pipe hangers and supports for placement by this section.
   3. Section 23 07 05 "HVAC and Plumbing Insulation." Product and execution requirements for pipe insulation.
   4. Division 26 Specification Sections for execution requirements for electric connections to equipment specified by this Section.

1.2 REFERENCES

A. American National Standards Institute:
   1. ANSI Z21.22 - Relief Valves for Hot Water Supply Systems.

B. American Society of Mechanical Engineers:
   1. ASME B16.18 - Cast Copper Alloy Solder Joint Pressure Fittings.
   2. ASME B16.22 - Wrought Copper and Copper Alloy Solder Joint Pressure Fittings.
   3. ASME B16.26 - Cast Copper Alloy Fittings for Flared Copper Tubes.
   4. ASME B31.9 - Building Services Piping.
   5. ASME B40.1 - Gauges - Pressure Indicating Dial Type - Elastic Element.
   6. ASME Section VIII - Boiler and Pressure Vessel Code - Pressure Vessels.
   7. ASME Section IX - Boiler and Pressure Vessel Code - Welding and Brazing Qualifications.

C. American Society of Sanitary Engineering:
   1. ASSE 1010 - Performance Requirements for Water Hammer Arresters.
   2. ASSE 1012 - Performance Requirements for Backflow Preventer with Intermediate Atmospheric Vent.
   3. ASSE 1013 - Performance Requirements for Reduced Pressure Principle Backflow Preventers and Reduced Pressure Fire Protection Principle Backflow Preventers.

4. ASSE 5013 - Performance Requirements for Reduced Pressure Principle Backflow Preventers (RP) and Reduced Pressure Fire Protection Principle Backflow Preventers (RFP).
5. ASSE 5015 - Performance Requirements for Testing Double Check Backflow Prevention Assemblies (DC) and Double Check Fire Protection Backflow Prevention Assemblies (RPDF).

D. ASTM International:
1. ASTM A395 - Standard Specification for Ferritic Ductile Iron Pressure-Retaining Castings for Use at Elevated Temperatures.
2. ASTM A536 - Standard Specification for Ductile Iron Castings.
3. ASTM B32 - Standard Specification for Solder Metal.
4. ASTM B42 - Standard Specification for Seamless Copper Pipe, Standard Sizes.
5. ASTM B88 - Standard Specification for Seamless Copper Water Tube.
6. ASTM B584 - Standard Specification for Copper Alloy Sand Castings for General Applications.
7. ASTM E1 - Standard Specification for ASTM Thermometers.
8. ASTM E77 - Standard Test Method for Inspection and Verification of Thermometers.
9. ASTM F1476 - Standard Specification for Performance of Gasketed Mechanical Couplings for Use in Piping Applications.

E. American Welding Society:
1. AWS A5.8 - Specification for Filler Metals for Brazing and Braze Welding.

F. American Water Works Association:

G. Manufacturers Standardization Society of the Valve and Fittings Industry:
1. MSS SP 58 - Pipe Hangers and Supports - Materials, Design and Manufacturer.
2. MSS SP 67 - Butterfly Valves.
3. MSS SP 69 - Pipe Hangers and Supports - Selection and Application.
4. MSS SP 71 - Cast Iron Swing Check Valves, Flanged and Threaded Ends.
5. MSS SP 80 - Bronze Gate, Globe, Angle and Check Valves.
6. MSS SP 85 - Cast Iron Globe & Angle Valves, Flanged and Threaded.
7. MSS SP 89 - Pipe Hangers and Supports - Fabrication and Installation Practices.
8. MSS SP 110 - Ball Valves Threaded, Socket-Welding, Solder Joint, Grooved and Flared Ends.

H. National Electrical Manufacturers Association:
1. NEMA 250 - Enclosures for Electrical Equipment (1000 Volts Maximum).

I. Plumbing and Drainage Institute:
1. PDI WH201 - Water Hammer Arrester Standard.

J. Underwriters Laboratories Inc.:
1. UL 393 - Indicating Pressure Gauges for Fire-Protection Service.
2. UL 404 - Gauges, Indicating Pressure, for Compressed Gas Service.

1.3 SUBMITTALS

A. Division 01 and Section 01 33 00 "Submittal Procedures."

B. Product Data:
1. Piping: Submit data on pipe materials, fittings, and accessories. Submit manufacturer's catalog information.
2. Valves: Submit manufacturers catalog information with valve data and ratings for each service.
3. Domestic Water Specialties: Submit manufacturers catalog information, component sizes, rough-in requirements, service sizes, and finishes.

4. Pumps: Submit pump type, capacity, certified pump curves showing pump performance characteristics with pump and system operating point plotted. Include NPSH curve when applicable. Include electrical characteristics and connection requirements.

C. Manufacturer's Installation Instructions: Submit installation instructions for pumps, valves and accessories.

1.4 CLOSEOUT SUBMITTALS

A. Project Record Documents: Record actual locations of valves and equipment.
B. Operation and Maintenance Data: Submit spare parts list, exploded assembly views and recommended maintenance intervals.

1.5 QUALITY ASSURANCE

A. For drinking water service, provide valves complying with NSF 61.
B. Perform Work in accordance with State and local standards.

1.6 QUALIFICATIONS

A. Manufacturer: Company specializing in manufacturing products specified in this section with minimum 3 years' experience.
B. Installer: Company specializing in performing Work of this section with minimum 3 years' experience.

1.7 DELIVERY, STORAGE, AND HANDLING

A. Accept valves and equipment on site in shipping containers with labeling in place. Inspect for damage.
B. Provide temporary protective coating on cast iron and steel valves.
C. Provide temporary end caps and closures on piping and fittings. Maintain in place until installation.
D. Protect piping systems from entry of foreign materials by temporary covers, completing sections of the Work, and isolating parts of completed system.

1.8 FIELD MEASUREMENTS

A. Verify field measurements prior to fabrication.

1.9 WARRANTY

A. Section 23 05 00 "General Mechanical Requirements."

1.10 EXTRA MATERIALS

A. Furnish two packing kits for each size valve, two loose keys for outside hose bibs and hose end vacuum breakers for hose bibs, and two pump seals for each pump model.

PART 2 - PRODUCTS

2.1 DOMESTIC WATER PIPING, BURIED WITHIN 5 FEET OF BUILDING

A. Copper Tubing: ASTM B88, Type K, annealed.
   1. Fittings: ASME B16.18, cast copper, or ASME B16.22, wrought copper.
   2. Joints: Compression connection or Brazed, AWS A5.8 BCuP silver/phosphorus/copper alloy with melting range 1,190 to 1,480 degrees F.

2.2 DOMESTIC WATER PIPING, ABOVE GRADE

A. Copper Tubing: ASTM B88, Type L, hard drawn.
   1. Fittings: ASME B16.18, cast copper alloy or ASME B16.22, wrought copper and bronze.
   2. Joints: ASTM B32, Alloy Grade Sb5 tin-antimony, or Alloy Grade Sn95 tin-silver, lead free solder
   3. Copper Press Fittings:
      a. Manufacturers:
         1) Viega.
         2) Ridge Tool Company.
      b. Press Fittings: Copper and copper alloy press fittings shall conform to material requirements of ASME B 16.18 or ASME B 16.22 and performance criteria of IAPMO PS117. Sealing elements for press fittings shall be EPDM. Sealing elements shall be factory installed. Press ends shall have SC (Smart Connect™) feature design (leakage path). In ProPress 1/2- to 4-inch dimensions the Smart Connect Feature assures leakage of fluids and/or gases from inside the system past the sealing element of an upressed connection. The function of this feature is to provide the installer quick and easy identification of connections which have not been pressed prior to putting the system into operation.

2.3 UNIONS AND FLANGES

A. Unions for Pipe 2 Inches and Smaller:
   1. Copper Piping: Class 150, bronze unions with soldered.
   2. Dielectric Connections: Union with galvanized or plated steel threaded end, copper solder end, water impervious isolation barrier.

B. Flanges for Pipe 2-1/2 Inches and Larger:
   1. Copper Piping: Class 150, slip-on bronze flanges.
   2. Gaskets: 1/16-inch thick preformed neoprene gaskets.

2.4 BALL VALVES

A. Manufacturers:
   1. Apollo Flow Controls; Conbraco Industries, Inc.
   2. Milwaukee Valve Company.
   3. NIBCO INC.
   4. Watts.

5. Substitutions: Division 01 and Section 23 05 00 "General Mechanical Requirements," substituted products.

B. Two Inches and Smaller: MSS SP 110, 600 psi WOG, bronze, three piece body, chrome plated bronze ball, full port, teflon seats, blow-out proof stem, solder or threaded ends with union, and lever handle.

2.5 CHECK VALVES

A. Horizontal Swing Check Valves:
   1. Manufacturers:
      a. Milwaukee Valve Company.
      b. NIBCO INC.
      c. Apollo Flow Controls.
      d. Substitutionss: Division 01 and Section 23 05 00 "General Mechanical Requirements," substituted products.

B. Spring Loaded Check Valves:
   1. Manufacturers:
      a. NIBCO INC.
      b. Milwaukee Valve Colpany.
      c. Subsitution: Division 01 and Sect 23 05 00 "General Mechanical Requirements," substituted products.
   2. Two Inches and Smaller: MSS SP 80, Class 250, bronze body, in-line spring lift check, silent closing, Buna-N disc, integral seat, solder or threaded ends.
   3. Two and One-Half Inches and Larger: MSS SP 71, Class 125, wafer or globe style, cast iron body, bronze seat, center guided bronze disc, stainless steel spring and screws, flanged ends.

2.6 PRESSURE GAGES

A. Manufacturers:
   1. Trerice.
   2. Weiss.
   3. Substitutions: Division 01 and Section 23 05 00 "General Mechanical Requirements" for substituted products.

B. Gage: ASME B40.1, UL 404 with bourdon tube, rotary brass movement, brass socket, front calibration adjustment, black scale on white background.
   1. Case: Cast aluminum.
   2. Bourdon Tube: Phosphor bronze.
   3. Dial Size: 4-1/2-inch diameter.
   4. Mid-Scale Accuracy: 1 percent.
   5. Scale: Psi.

2.7 PRESSURE GAGE TAPS

A. Manufacturers:
   1. Trerice.
   2. Weiss.
   3. Substitutions: Division 01 and Section 23 05 00 "General Mechanical Requirements." substituted products.

B. Ball Valve: Brass, 1/4-inch NPT for 250 psi.

2.8 STEM TYPE THERMOMETERS

A. Manufacturers:
   1. Trerice.
   2. Weiss.
   3. Substitutions: Division 01 and Section 23 05 00 "General Mechanical Requirements." substituted products.

B. Thermometer: ASTM E1, red appearing mercury, lens front tube, cast aluminum case with enamel finish.
   1. Size: 9 inch scale.
   2. Window: Clear Lexan.
   3. Stem: Brass, 3/4-inch NPT, 3-1/2 inches long.
   4. Accuracy: 2 percent.
   5. Calibration: Degrees F.

2.9 RELIEF VALVES

A. Pressure Relief:
   1. Bronze body, Teflon seat, steel stem and springs, automatic, direct pressure actuated at maximum 60 psi, UL listed for fuel oil, capacities ASME certified and labeled.

B. Temperature and Pressure Relief:
   1. ANSI Z21.22 certified, bronze body, teflon seat, stainless steel stem and springs, automatic, direct pressure actuated, temperature relief maximum 210 degrees F, capacity ASME certified and labeled.

2.10 STRAINERS

A. Manufacturers:
   1. Watts.
   2. Zurn Industries, LLC.
   3. Substitutions: Division 01 and Section 23 05 00 "General Mechanical Requirements." substituted products.

B. Two inches and Smaller: Threaded brass body for 175 psi CWP, Y pattern with 1/32-inch stainless steel perforated screen.

C. One and One-Half Inches to 4 Inches: Class 125, flanged iron body, Y pattern with 1/16-inch stainless steel perforated screen.

D. Five Inches and Larger: Class 125, flanged iron body, basket pattern with 1/8-inch stainless steel perforated screen.

2.11 WATER HAMMER ARRESTORS

A. ASSE 1010; stainless steel construction, piston type sized in accordance with PDI WH-201.

B. Pre-charged suitable for operation in temperature range 34 to 250 degrees F and maximum 150 psi working pressure.

2.12 THERMOSTATIC MIXING VALVES

A. Valve: Chrome plated cast brass body, stainless steel or copper alloy bellows, integral temperature adjustment. Conform to ASSE 1070 to temper water to maximum 110 degrees F.

2.13 DIAPHRAGM-TYPE COMPRESSION TANKS

A. Manufacturers:
   1. Amtrol.
   2. Elbi.
   3. Substitutions: Division 01 and Section 23 05 00 "General Mechanical Requirements." substituted products.
B. Construction: Welded steel, tested and stamped in accordance with ASME Section VIII; supplied with National Board Form U-1, rated for working pressure of 125 psig, with flexible diaphragm sealed into tank, and steel legs or saddles.
C. Accessories: Pressure gage and air-charging fitting.

PART 3 - EXECUTION

3.1 EXAMINATION

A. Verify excavations are to required grade, dry, and not over-excavated.

3.2 PREPARATION

A. Ream pipe and tube ends. Remove burrs.
B. Remove scale and dirt, on inside and outside, before assembly.

3.3 INSTALLATION - THERMOMETERS AND GAGES

A. Install one pressure gage for each pump, locate taps before strainers and on suction and discharge of pump; pipe to gage.
B. Install gage taps in piping.
C. Install pressure gauges with pulsation dampers. Provide ball valve to isolate each gage.
D. Install thermometers in piping systems in sockets in short couplings. Enlarge pipes smaller than 2-1/2 inches for installation of thermometer sockets. Allow clearance from insulation.
E. Provide instruments with scale ranges selected according to service with largest appropriate scale.
F. Install gauges and thermometers in locations where they are easily read from normal operating level. Install vertical to 45 degrees off vertical.
G. Adjust gauges and thermometers to final angle, clean windows and lenses, and calibrate to zero.

3.4 INSTALLATION - BURIED PIPING SYSTEMS

A. Verify connection size, location, and invert are as indicated on Drawings.
B. Establish elevations of buried piping with not less than 2 feet of cover.
C. Establish minimum separation of water from sanitary sewer piping piping in accordance with local code.

D. Remove scale and dirt on inside of piping before assembly.
E. Excavate pipe trench in accordance with Section 23 05 00 "General Mechanical Requirements."
F. Route pipe in straight line.
G. Install pipe to allow for expansion and contraction without stressing pipe or joints.
H. Install shutoff valves at locations indicated on Drawings in accordance with this Section.
I. Metallic Pipe: Install plastic ribbon tape continuous over top of pipe. 12 inches above pipeline; coordinate with Section 23 05 00 "General Mechanical Requirements.
J. Non-Metallic Pipe: Install trace wire continuous over top of pipe. Buried 12 inches above pipeline; coordinate with Section 23 05 00 "General Mechanical Requirements."
K. Pipe Cover and Backfilling:
    1. Backfill trench in accordance with Section 23 05 00 "General Mechanical Requirements."
    2. Maintain optimum moisture content of fill material to attain required compaction density.
    3. After hydrostatic test, evenly backfill entire trench in accordance with Section 23 05 00 "General Mechanical Requirements."
    4. Evenly and continuously backfill remaining trench depth in uniform layers with backfill material.
    5. Do not use wheeled or tracked vehicles for tamping.

3.5 INSTALLATION - ABOVE GROUND PIPING

A. Install non-conducting dielectric connections wherever jointing dissimilar metals.
B. Route piping in orderly manner and maintain gradient. Route parallel and perpendicular to walls.
C. Install piping to maintain headroom without interfering with use of space or taking more space than necessary.
D. Group piping whenever practical at common elevations.
E. Slope piping and arrange systems to drain at low points.
F. Install piping to allow for expansion and contraction without stressing pipe, joints, or connected equipment.
G. Provide clearance in hangers and from structure and other equipment for installation of insulation and access to valves and fittings. Refer to Section 22 05 29 "Hangers and Supports."
H. Provide access where valves and fittings are not accessible.
I. Where pipe support members are welded to structural building framing, scrape, brush clean, and apply one coat of zinc rich primer to welding.
J. Provide support for utility meters in accordance with requirements of utility companies.
K. Prepare exposed, unfinished pipe, fittings, supports, and accessories ready for finish painting. Refer to Division 09.
L. Install domestic water piping in accordance with ASME B31.9.
M. Sleeve pipes passing through partitions, walls and floors.
N. Install unions downstream of valves and at equipment or apparatus connections.
O. Install valves with stems upright or horizontal, not inverted.
P. Install brass male adapters each side of valves in copper piped system. Solder adapters to pipe.
Q. Install ball or butterfly valves for shut-off and to isolate equipment, part of systems, or vertical risers.
R. Install ball or butterfly valves for throttling, bypass, or manual flow control services.

S. Provide lug end butterfly valves adjacent to equipment when functioning to isolate equipment.
T. Provide spring loaded check valves on discharge of water pumps.
U. Install potable water protection devices on plumbing lines where contamination of domestic water may occur; on boiler feed water lines, janitor rooms, fire sprinkler systems, premise isolation, irrigation systems, flush valves, interior and exterior hose bibs.
V. Pipe relief from valves, back-flow preventers and drains to nearest floor drain.
W. Test backflow preventers in accordance with ASSE.
X. Install water hammer arrestors complete with accessible isolation valve on hot and cold water supply piping as shown on Drawings.
Y. Press Connections: Copper press fittings shall be made in accordance with the manufacturer's installation instructions. The tubing shall be fully inserted into the fitting and the tubing marked at the shoulder of the fitting. The fitting alignment shall be checked against the mark on the tubing to assure the tubing is fully engaged (inserted) in the fitting. The joint shall be pressed using the tool approved by the manufacturer.

3.6 FIELD QUALITY CONTROL

A. Test domestic water piping system in accordance with applicable code.

3.7 CLEANING

A. Prior to starting work, verify system is complete, flushed and clean.
B. Verify pH of water to be treated is between 7.4 and 7.6 by adding alkali (caustic soda or soda ash) or acid (hydrochloric).
C. Inject disinfectant, free chlorine in liquid, powder and tablet or gas form, throughout system to obtain residual from 50 to 80 milligrams per liter.
D. Bleed water from outlets to obtain distribution and test for disinfectant residual at minimum 15 percent of outlets.
E. Maintain disinfectant in system for 24 hours.
F. When final disinfectant residual tests less than 25 milligrams per liter, repeat treatment.
G. Flush disinfectant from system until residual concentration is equal to incoming water or 1.0 milligrams per liter.
H. Take samples no sooner than 24 hours after flushing, from 10 percent of outlets and from water entry, and analyze in accordance with AWWA C651.

END OF SECTION

SECTION 22 13 00 - FACILITY SANITARY SEWERAGE

PART 1 - GENERAL

1.1 SUMMARY

A. Section Includes:
   1. Sanitary sewer piping buried beyond 5 feet of building.
   2. Sanitary sewer piping above grade.

B. Related Sections:
   1. Division 01 Specification Sections apply to Work of this Section.

1.2 REFERENCES

A. American Society of Mechanical Engineers:
   1. ASME A112.14.1 - Backwater Valves.
   2. ASME A112.14.3 - Grease Interceptors.
   3. ASME A112.14.4 - Grease Removal Devices.
   4. ASME A112.21.1 - Floor Drains.
   5. ASME B16.1 - Cast Iron Pipe Flanges and Flanged Fittings.
   6. ASME B16.3 - Malleable Iron Threaded Fittings.
   7. ASME B16.4 - Gray Iron Threaded Fittings.
   8. ASME B16.23 - Cast Copper Alloy Solder Joint Drainage Fittings (DWV).
   9. ASME B16.29 - Wrought Copper and Wrought Copper Alloy Solder Joint Drainage Fittings - DWV.
   10. ASME B31.9 - Building Services Piping.

B. ASTM International:
   1. ASTM A47 - Standard Specification for Ferritic Malleable Iron Castings.
   2. ASTM A53 - Standard Specification for Pipe, Steel, Black and Hot-Dipped, Zinc-Coated, Welded and Seamless.
   3. ASTM A74 - Standard Specification for Cast Iron Soil Pipe and Fittings.
   4. ASTM A234 - Standard Specification for Piping Fittings of Wrought Carbon Steel and Alloy Steel for Moderate and High Temperature Service.
   5. ASTM A395 - Standard Specification for Ferritic Ductile Iron Pressure-Retaining Castings for Use at Elevated Temperatures.
   6. ASTM A536 - Standard Specification for Ductile Iron Castings.
   7. ASTM A746 - Standard Specification for Ductile Iron Gravity Sewer Pipe.
   8. ASTM B32 - Standard Specification for Solder Metal.
   9. ASTM B42 - Standard Specification for Seamless Copper Pipe, Standard Sizes.
   10. ASTM B43 - Standard Specification for Seamless Red Brass Pipe, Standard Sizes.
   11. ASTM B75 - Standard Specification for Seamless Copper Tube.
   12. ASTM B88 - Standard Specification for Seamless Copper Water Tube.
   13. ASTM B251 - Standard Specification for General Requirements for Wrought Seamless Copper and Copper-Alloy Tube.
   14. ASTM B302 - Standard Specification for Threadless Copper Pipe, Standard Sizes.
   15. ASTM B306 - Standard Specification for Copper Drainage Tube (DWV).
   16. ASTM C564 - Standard Specification for Rubber Gaskets for Cast Iron Soil Pipe and Fittings.

17. ASTM D1784 - Standard Specification for Rigid Poly (Vinyl Chloride) (PVC) compounds and Chlorinated Poly (Vinyl Chloride) (CPVC) Compounds.
18. ASTM D1785 - Standard Specification for Poly (Vinyl Chloride) (PVC) Plastic Pipe, Schedules 40, 80, and 120.
19. ASTM D2235 - Standard Specification for Solvent Cement for Acrylonitrile-Butadiene-Styrene (ABS) Plastic Pipe and Fittings.
20. ASTM D2241 - Standard Specification for Polyethylene (PE) Plastic Pipe (SIDR-PR) Based on Controlled Inside Diameter.
21. ASTM D2464 - Standard Specification for Threaded Poly (Vinyl Chloride) (PVC) Plastic Pipe Fittings, Schedule 80.
22. ASTM D2466 - Standard Specification for Poly (Vinyl Chloride) (PVC) Plastic Pipe Fittings, Schedule 40.
23. ASTM D2467 - Standard Specification for Poly (Vinyl Chloride) (PVC) Plastic Pipe Fittings, Schedule 80.
24. ASTM D2564 - Standard Specification for Solvent Cements for Poly (Vinyl Chloride) (PVC) Plastic Piping Systems.
25. ASTM D2665 - Standard Specification for Poly (Vinyl Chloride) (PVC) Plastic Drain, Waste, and Vent Pipe and Fittings.
26. ASTM D2729 - Standard Specification for Poly (Vinyl Chloride) (PVC) Sewer Pipe and Fittings.
27. ASTM D2855 - Standard Practice for Making Solvent-Cemented Joints with Poly (Vinyl Chloride) (PVC) Pipe and Fittings.
28. ASTM D3034 - Standard Specification for Type PSM Poly (Vinyl Chloride) (PVC) Sewer Pipe and Fittings.
29. ASTM F477 - Standard Specification for Elastomeric Seals (Gaskets) for Joining Plastic Pipe.
30. ASTM F708 - Standard Practice for Design and Installation of Rigid Pipe Hangers.
31. ASTM F1476 - Standard Specification for Performance of Gasketed Mechanical Couplings for Use in Piping Applications.

C. Cast Iron Soil Pipe Institute:
   1. CISPI 301 - Standard Specification for Hubless Cast Iron Soil Pipe and Fittings for Sanitary and Storm Drain, Waste, and Vent Piping Applications.
   2. CISPI 310 - Specification for Coupling for Use in Connection with Hubless Cast Iron Soil Pipe and Fittings for Sanitary and Storm Drain, Waste, and Vent Piping Applications.

D. Manufacturers Standardization Society of the Valve and Fittings Industry:
   1. MSS SP 58 - Pipe Hangers and Supports - Materials, Design and Manufacturer.
   2. MSS SP 69 - Pipe Hangers and Supports - Selection and Application.
   3. MSS SP 70 - Cast Iron Gate Valves, Flanged and Threaded Ends.
   4. MSS SP 71 - Cast Iron Swing Check Valves, Flanged and Threaded Ends.
   5. MSS SP 80 - Bronze Gate, Globe, Angle and Check Valves.
   6. MSS SP 89 - Pipe Hangers and Supports - Fabrication and Installation Practices.
   7. MSS SP 110 - Ball Valves Threaded, Socket-Welding, Solder Joint, Grooved and Flared Ends.

E. Plumbing and Drainage Institute:
   1. PDI G101 - Standard - Testing and Rating Procedure for Grease Interceptors.

1.3 SUBMITTALS

A. Division 01 and Section 23 05 00 "General Mechanical Requirements."
B. Product Data:
   1. Piping: Submit data on pipe materials, fittings, and accessories. Submit manufacturers catalog information.
   2. Sanitary Drainage Specialties: Submit manufacturers catalog information, component sizes, rough-in requirements, service sizes, and finishes.
C. Manufacturer's Installation Instructions: Submit installation instructions for material and equipment.
D. Manufacturer's Certificate: Certify products meet or exceed specified requirements.

1.4 CLOSEOUT SUBMITTALS

A. Project Record Documents: Record actual locations of equipment and clean-outs.

1.5 QUALITY ASSURANCE

A. Perform Work in accordance with State and local standards.

1.6 QUALIFICATIONS

A. Manufacturer: Company specializing in manufacturing products specified in this section with minimum 3 years' experience.
B. Installer: Company specializing in performing Work of this section with minimum 3 years' experience .

1.7 DELIVERY, STORAGE, AND HANDLING

A. Protect piping systems from entry of foreign materials by temporary covers, completing sections of the Work, and isolating parts of completed system.

1.8 ENVIRONMENTAL REQUIREMENTS

A. Do not install underground piping when bedding is wet or frozen.

1.9 FIELD MEASUREMENTS

A. Verify field measurements prior to fabrication.

1.10 WARRANTY

A. Section 23 05 00 "General Mechanical Requirements" for product warranties.

PART 2 - PRODUCTS

2.1 SANITARY SEWER PIPING, BURIED BEYOND 5 FEET OF BUILDING

A. Cast Iron Soil Pipe: ASTM A74, service weight, bell and spigot ends.
   1. Fittings: Cast iron, ASTM A74.
   2. Joints: Hub-and-spigot, CISPI HSN compression type with ASTM C564, neoprene gaskets or lead and oakum.

B. PVC Pipe: ASTM D2729, polyvinyl chloride (PVC) material, bell and spigot solvent sealed ends.
   1. Fittings: PVC, ASTM D2729.
   2. Joints: ASTM D2855, solvent weld with ASTM D2564 solvent cement.

C. PVC Pipe: ASTM D3034, Type PSM, polyvinyl chloride (PVC) material, bell, and spigot style rubber ring sealed gasket joint.
   1. Fittings: PVC, ASTM D3034.
   2. Joints: ASTM F477, elastomeric gaskets.

D. PVC Pipe: ASTM D1785, Schedule 40, polyvinyl chloride (PVC) material, bell and spigot style solvent sealed joint ends.
   1. Fittings: ASTM D2466, Schedule 40, PVC .
   2. Joints: ASTM D2855, solvent weld with ASTM D2564 Solvent cement.

E. Plastic Pipe: ASTM D2665, polyvinyl chloride (PVC) material.
   1. Fittings: PVC, ASTM D2665.
   2. Joints: ASTM D2855, solvent weld with ASTM D2564 solvent cement.

2.2 SANITARY SEWER PIPING, ABOVE GRADE

A. Cast Iron Pipe: ASTM A74, service weight.
   1. Fittings: Cast iron, ASTM A74.
   2. Joints: ASTM C564, rubber gasket joint devices or lead and oakum.

B. Cast Iron Pipe: CISPI 301, hub-less.
   1. Fittings: Cast iron, CISPI 301.
   2. Joints: CISPI 310, neoprene gaskets and stainless steel clamp-and-shield assemblies.

C. Copper Tube: ASTM B306, DWV ASTM B88 ASTM B251 Type L.
   1. Fittings: ASME B16.23, cast bronze, or ASME B16.29, wrought copper.
   2. Joints: Solder, lead free, ASTM B32,95-5 tin-antimony, or tin and silver, with melting range 430 to 535 degrees F.

D. PVC Pipe: ASTM D2729, polyvinyl chloride (PVC) material.
   1. Fittings: ASTM D2729, PVC.
   2. Joints: ASTM D2855, solvent weld with ASTM D2564 solvent cement.

E. PVC Pipe: ASTM D2665, polyvinyl chloride (PVC) material.
   1. Fittings: ASTM D2665, PVC.
   2. Joints: ASTM D2855, solvent weld with ASTM D2564 solvent cement.

F. PVC Pipe: ASTM D1785 Schedule 40 , polyvinyl chloride (PVC) material.
   1. Fittings: ASTM D2466, Schedule 40, PVC .
   2. Joints: ASTM D2855, solvent weld with ASTM D2564 Solvent cement.

PART 3 - EXECUTION

3.1 EXAMINATION

A. Verify excavations are to required grade, dry, and not over-excavated.

3.2 PREPARATION

A. Ream pipe and tube ends. Remove burrs.
B. Remove scale and dirt, on inside and outside, before assembly.
C. Prepare piping connections to equipment with flanges or unions.
D. Keep open ends of pipe free from scale and dirt. Protect open ends with temporary plugs or caps.

3.3 INSTALLATION - HANGERS AND SUPPORTS

A. Pipe Hangers and Supports:
   1. Install in accordance with Section 22 05 29 "Hangers and Supports."

3.4 INSTALLATION - BURIED PIPING SYSTEMS

A. Verify connection to existing piping system size, location, and invert are as indicated on Drawings.
B. Establish elevations of buried piping with not less than 2 feet of cover.
C. Establish minimum separation of sanitary sewer from other services piping in accordance with local code.
D. Remove scale and dirt on inside of piping before assembly.
E. Excavate pipe trench in accordance with Section 23 05 00 "General Mechanical Requirements."
F. Install pipe to elevation as indicated on Drawings.
G. Route pipe in straight line.
H. Metallic Piping: Install plastic ribbon tape continuous over top of pipe. above pipe. Refer to Section 23 05 53 "Identification for HVAC and Plumbing Piping and Equipment.
I. Non-Metalic Piping: Install trace wire continuous over top of pipe. Refer to Section Section 23 05 00 "General Mechanical Requirements."
J. Pipe Cover and Backfilling:
   1. Backfill trench in accordance with Section 23 05 00 "General Mechanical Requirements."

3.5 INSTALLATION - ABOVE GROUND PIPING

A. Establish invert elevations, slopes for drainage as required by local code. Maintain gradients.
B. Extend cleanouts to finished floor or wall surface. Lubricate threaded cleanout plugs with mixture of graphite and linseed oil. Provide clearances at cleanout for snaking drainage system.
C. Encase exterior cleanouts in concrete flush with grade.
D. Install floor cleanouts at elevation to accommodate finished floor.
E. Provide non-conducting dielectric connections wherever jointing dissimilar metals.

F. Route piping in orderly manner and maintain gradient. Route parallel and perpendicular to walls.
G. Install piping to maintain headroom. Do not spread piping, conserve space.
H. Group piping whenever practical at common elevations.
I. Install piping to allow for expansion and contraction without stressing pipe, joints, or connected equipment.
J. Provide clearance in hangers and from structure and other equipment for installation of insulation.
K. Provide access where valves and fittings are not accessible.
L. Install piping penetrating roofed areas to maintain integrity of roof assembly.
M. Where pipe support members are welded to structural building framing, scrape, brush clean, and apply one coat of zinc rich primer to welding.
N. Prepare exposed, unfinished pipe, fittings, supports, and accessories ready for finish painting. Refer to Division 09 Finishes.
O. Install bell and spigot pipe with bell end upstream.
P. Sleeve pipes passing through partitions, walls and floors.
Q. Install firestopping at fire rated construction perimeters and openings containing penetrating sleeves and piping. Refer to Division 07.
R. Support cast iron drainage piping at every joint.

3.6 FIELD QUALITY CONTROL

A. Test sanitary waste and vent piping system in accordance with applicable code.

END OF SECTION

SECTION 22 33 00 - ELECTRIC DOMESTIC WATER HEATERS

PART 1 - GENERAL

1.1 SUMMARY

A. Section Includes:
   1. Electric water heaters.
B. Related Sections:
   1. Division 01 Specification Section apply to Work of this Section.
   2. Section 03 30 00 "Cast-in-Place Concrete:" Execution requirements for concrete housekeeping pads specified by this Section.
   3. Section: 22 11 00 "Facility Water Distribution:" Supply connections to domestic water heaters.
   4. Section 26 05 91 "Equipment Wiring Systems:" Electric connection specified by this Section.

1.2 REFERENCES

A. American Society of Heating, Refrigerating and Air-Conditioning Engineers:
   1. ASHRAE 90.1 - Energy Standard for Buildings Except Low-Rise Residential Buildings.
B. American Society of Mechanical Engineers:
   1. ASME PTC 25 - Pressure Relief Devices.
   2. ASME Section VIII - Boiler and Pressure Vessel Code - Pressure Vessels.

1.3 SUBMITTALS

A. Division 01 and Section 01 33 00 "Submittal Procedures."
B. Product Data: Submit dimensioned Drawings of water heaters indicating components and connections to other equipment and piping. Submit electrical characteristics and connection locations.
C. Manufacturer's Installation Instructions: Submit mounting and support requirements.

1.4 CLOSEOUT SUBMITTALS

A. Operation and Maintenance Data: Submit replacement part numbers and availability.

1.5 QUALITY ASSURANCE

A. Water Heater Performance Requirements: Equipment efficiency not less than prescribed by ASHRAE 90.1.
B. Perform Work according to State and local standards.

1.6 QUALIFICATIONS

A. Manufacturer: Company specializing in manufacturing products specified in this Section with minimum 3 years' experience.
B. Installer: Company specializing in performing Work of this Section with minimum 3 years' documented experience.

1.7 DELIVERY, STORAGE, AND HANDLING

A. Accept water heaters on Site in original labeled cartons. Inspect for damage.
B. Protect tanks with temporary inlet and outlet caps. Maintain caps in place until installation.

1.8 FIELD MEASUREMENTS

A. Verify field measurements prior to fabrication.

1.9 WARRANTY

A. Refer to Division 01 and Section 23 05 00 "General Mechanical Requirements."
B. Furnish 3 year manufacturer warranty for domestic water heaters.

PART 2 - PRODUCTS

2.1 ELECTRIC WATER HEATERS

A. Manufacturers:
   1. A. O. Smith Corporation.
   2. State Industries.
   3. Keltech.
   4. Substitutions: Section 23 05 00 "General Mechanical Requirements."
B. Type: Automatic, electric, vertical storage.
C. Tank: Glass lined welded steel, thermally insulated with minimum 1-inch-thick glass fiber; encased in corrosion-resistant steel jacket with baked-on enamel finish.
D. Controls: Automatic water thermostat with temperature range from 120 to 170 degrees F, flanged or screw-in nichrome elements, enclosed controls and electrical junction box.
E. Accessories: Brass water connections and dip tube, drain valve, magnesium anode, and ASME temperature and pressure relief valve.

PART 3 - EXECUTION

3.1 INSTALLATION

A. Maintain manufacturer's recommended clearances around and over water heaters.
B. Install water heater on concrete housekeeping pad, minimum 3-1/2 inches high and 6 inches larger than water heater base on each side.
C. Connect domestic hot and cold water piping to supply and return water heater connections.

D. Install the following piping accessories.
   1. On Supply:
      a. Shutoff valve.
   2. On Return:
      a. Thermometer well and thermometer.
      b. Shutoff valve.
E. Install discharge piping from relief valves and drain valves to nearest floor drain.
F. Install water heater trim and accessories furnished loose for field mounting.

G. Install electrical devices furnished loose for field mounting.
H. Install control wiring between water heater control panel and field mounted control devices.
I. Install Work according to State and local standards.

END OF SECTION

SECTION 22 40 00 - PLUMBING FIXTURES

PART 1 - GENERAL

1.1 SUMMARY

A. Section Includes:
   1. Water closets.
   2. Lavatories.
   3. Drains.

B. Related Sections:
   1. Division 01 Specification Sections apply to Work of this Section.

1.2 SUBMITTALS

A. Division 01 and Section 23 05 00 "General Mechanical Requirements."
B. Product Data: Submit catalog illustrations of fixtures, sizes, rough-in dimensions, utility sizes, trim, and finishes.
C. Manufacturer's Installation Instructions: Submit installation methods and procedures.
D. Manufacturer's Certificate: Certify products meet or exceed specified requirements.

1.3 CLOSEOUT SUBMITTALS

A. Operation and Maintenance Data: Submit fixture, trim, exploded view, and replacement parts lists.

1.4 QUALITY ASSURANCE

A. Perform Work according to State and local standards.
B. Provide products requiring electrical connections listed and classified by Underwirters Laboratory Inc., as suitable for purpose specified and indicated.

1.5 QUALIFICATIONS

A. Manufacturer: Company specializing in manufacturing products specified in this Section with minimum 3 years' experience.
B. Installer: Company specializing in performing Work of this Section with minimum 3 years' experience.

1.6 DELIVERY, STORAGE, AND HANDLING

A. Accept fixtures on-site in factory packaging. Inspect for damage.
B. Protect installed fixtures from damage by securing areas and by leaving factory packaging in place to protect fixtures and prevent use.

PART 2 - PRODUCTS

2.1 FIXTURES

A. Refer to Drawings Plumbing Fixture Schedule for fixture make, model numbers, and type.

PART 3 - EXECUTION

3.1 EXAMINATION

A. Verify walls and floor finishes are prepared and ready for installation of fixtures.
B. Verify electric power is available and of correct characteristics.
C. Confirm millwork is constructed with adequate provision for installation of counter top lavatories and sinks.

3.2 PREPARATION

A. Rough-in fixture piping connections according to minimum sizes indicated in fixture rough-in schedule for particular fixtures.

3.3 INSTALLATION

A. Install Work according to State and local standards.
B. Install each fixture with trap, easily removable for servicing and cleaning.
C. Provide chrome-plated rigid or flexible supplies to fixtures with stops, reducers, and escutcheons.
D. Install components level and plumb.
E. Install and secure fixtures in place with wall supports or carriers and bolts.
F. Seal fixtures to wall and floor surfaces with sealant as specified in Division 07, color to match fixture.

3.4 INTERFACE WITH OTHER PRODUCTS

A. Review millwork Shop Drawings. Confirm location and size of fixtures and openings before rough in and installation.

3.5 ADJUSTING

A. Adjust stops or valves for intended water flow rate to fixtures without splashing, noise, or overflow.

3.6 CLEANING

A. Clean plumbing fixtures and equipment.

3.7 PROTECTION OF INSTALLED CONSTRUCTION

A. Do not permit use of fixtures before final acceptance.

END OF SECTION

SECTION 23 05 00 - GENERAL MECHANICAL REQUIREMENTS

PART 1 - GENERAL

1.1 SUMMARY

A. Related Requirements:
   1. Division 01 Specification Sections apply to Work of this Section.

1.2 DESCRIPTION

A. Work covered by this Division shall consist of furnishing all labor, equipment, supplies, and materials and in performing all operations necessary for the installation of complete and operating mechanical systems as required by these Specifications and/or shown on the Drawings, subject to the terms and conditions of the Contract. The Work shall also include the completion of such mechanical and electrical details not mentioned or shown which are necessary for the successful operation of all systems described on the Drawings or required by these Specifications; this includes the furnishing all materials for the filling the systems to make them operable, including water, refrigerant, oil, and grease. Prove satisfactory operation of all equipment and controls to Engineer on request.

B. Work Not Included: Certain labor, material, and equipment may be furnished and/or installed under other Divisions of these Specifications. This Contractor shall coordinate with other trades and arrange his Work to make the part fit together. The following items are to be accomplished under other Divisions of these Specifications:
   1. Temporary Heat: Refer to paragraph in this Section.
   2. Temporary Water and Toilet: Refer to General Conditions.
   3. Roof Curbs: Refer to paragraph in this Section.
   4. Electrical Equipment and Wiring: Refer to paragraph in this Section.
   5. Concrete: Refer to paragraph in this Section.

C. Equipment Furnished by Owner: Rough-in services pipes to locations as required by Engineerural and Mechanical Drawings and equipment Shop Drawings. Provide service valves on all pipes except waste and vent pipes. Final connection to equipment will be made by this Contractor.

1.3 BIDDING

A. All mechanical equipment shall be new unless specified otherwise in the Specifications or on the Drawings.

B. All Bids must be based only on the equipment and materials as scheduled on the Drawings and as specified or on equivalent equipment and materials. Any Contractor who assumes equivalence of products and who bases his Proposal on that assumption does so at his own risk.

C. A listing of approved alternative manufacturers does not mean that all products of a particular alternative manufacturer are acceptable alternative to the scheduled items. All fixtures and devices must still be submitted according to the prescribed procedures. In addition, some items that have an important visual affect, e.g., electric water coolers, may be required to receive Owner's or Engineer's approval also.

1.4 EXISTING UTILITIES

A. The Drawings indicate the locations, type, and sizes of various utilities within the Site where known. These utilities are indicated as accurately as possible. If Contractor encounters any utilities during construction which are not shown on the Drawings, they shall ask for written instructions from Engineer. Any relocation or remodeling required will then be directed by a change order. This Contractor shall assume all responsibility for protection of all utilities, shown or not, and for repair required by this construction.

B. Contractor shall verify location, size, elevation, pressure, and any other pertinent data of the existing utilities. Additional costs incurred due to failure to verify such data and to coordinate associated Work with respective utility providers shall not be Owner's responsibility but shall be borne by Contractor.

C. All costs associated with providing utilities including, but not limited to, connection fees, boring under roads, etc., shall be included in Contractor's proposal price, whether such costs are incurred by Contractor or charged by the utility company.

D. Submission of a proposal by Contractor shall be considered an acknowledgment by Contractor of his compliance with this Section.

1.5 CODES, PERMITS, AND FEES

A. Contractor shall comply with all local, State, and national codes and shall pay for all applicable costs, fees, permits, licenses, and inspections for this Division.

1.6 TEMPORARY HEAT

A. Temporary heat will be furnished by General Contractor. Use of the permanent heating system will not be allowed without written authorization from Engineer and Owner. In case the permanent heating system is used for temporary heat, General Contractor shall pay all the costs until acceptance by Owner. Warranty of equipment shall not start until acceptance by Owner.

1.7 DRAWINGS

A. Contract Drawings are diagrammatic only and are not intended to be scaled for dimensions. All dimensions shall be taken from Engineerural Drawings, certified equipment Drawings, and from the structure itself before fabricating and Work. All space requirements and equipment locations shall be verified, coordinated with other trades, as it is the various Contractors' responsibility to install the systems complete in the space provided without extra charges to Owner.

B. It is intended that anything, whether labor and materials, which is usually furnished as part of any equipment specified and which is necessary for operation shall be furnished as part of the Contract without additional cost, whether or not shown or described.

C. All piping in finished areas of the building shall be concealed except where otherwise noted on the Drawings.

D. All equipment shall be installed in accordance with manufacturer's recommendations, unless approval is given in writing by Engineer for deviation.

1.8 REQUIREMENTS OF REGULATORY AGENCIES

A. The mechanical Work shall be performed in strict accordance with the local and State codes, ordinances, and regulations governing the particular Work involved. Furnish, without extra charge, any additional material and labor when and where required to comply with these Rules and Regulations, though the Work is not mentioned in the Specifications or shown on the Drawings. When the Specifications or Drawings call for or describe materials or construction of a better quality or larger sizes than required by the above mentioned Rules and Regulations, the provisions of these Specifications and accompanying Drawings shall take precedence.

1.9 QUALIFICATIONS

A. All mechanics shall be capable journeymen, skilled in the Work assigned to them with licensing required by the inspecting authority. All welders must have been certified within the past 3 years to perform the Work which they are doing.

1.10 WARRANTY

A. All materials and equipment shall be new unless otherwise specified.
B. Guarantee all workmanship, material and equipment and replace any found defective without cost to Owner, for 1 year after final acceptance, as defined in General Conditions.
C. Each warranty for longer than 1 year as described above (that comes with equipment used on the job) shall be passed into Owner in the Operation and Maintenance Manual, along with the dates of start and end of warranty.
D. Refer to General Conditions for additional information regarding specific warranty requirements.

1.11 PROJECT RECORD DOCUMENTS

A. Before final payment, provide Engineer with one clean set of Drawings and Specifications corrected up-to-date as job progress. These documents shall reflect the As-Built conditions. Refer to General Conditions for additional information.

1.12 SUBMITTALS

A. The intent of this Section is to give general submittal information; refer to specific submittal information in the subsequent Mechanical Sections.
B. Sale of Electronic CADD Files:
   1. Refer to Engineerural Specification Section 01 33 00 "Submittal Procedures" OR call the Parkhill, office issuing this Project and request the pricing for electronic files.
C. Within 30 days after award of the Contract, and before orders are placed, Contractor shall submit specific information on list of equipment and principal materials specified. Contractor shall indicate and/or provide names of manufacturers, catalog and model numbers, cut sheets, and such other supplementary information as necessary for evaluation. Submittal shall be electronic using pdf file extension.

D. Requirements for Each Submittal:
   1. Bear a dated stamp or specific written indication that Contractor has reviewed and approved all submittal prior to submission to Engineer.
   2. Have all information deleted by Contractor that pertains to the means and methods of construction or to fabrication by Contractor that pertains to the means and methods of construction or to fabrication, assembly, installation, or erection (approval by Engineer shall not extend to these areas unless specifically noted by Engineer).
   3. Be clearly and SPECIFICALLY marked as to which specific piece of equipment is being submitted, bye use of a permanent marker, stamp, etc., so as to distinguish it from other pieces of equipment that may occur on the same page.
   4. Be clearly marked as to which available options are being submitted that are associated with a piece of equipment.
   5. Be complete with respect to quantities, dimensions, specific performance, materials, and similar data to enable the Engineer to review the proposed equipment.

E. Omission by Contractor of any of the above requirements or submittals will subject submittal to automatic rejection without review.

F. Any submittals received by Engineer that were not requested shall be returned without review of any kind.

G. Installation Instructions: For certain products or systems as identified in subsequent Specifications Sections or on the Drawings, Contractor shall be required to provide copies of manufacturer's installation instructions with the submittal. When required as such, the installation instructions are considered part of the submittal and their omission may result in automatic rejection of the submittal. Where more than one identical device is scheduled, only one set of installation instructions needs to be submitted; e.g., if seven 5-ton split systems air conditions are scheduled, only one 5-ton unit installation instruction needs to be submitted. Similarly, if one set of installation instructions is identified by the manufacturer and on the instructions to be applicable to more than 1 type or size of devices, e.g., if one set of air conditioner instructions is good for 3-, 4-, 5-ton units, then only one instruction set is required for these devices.

1.13 SUBSTITUTED PRODUCTS

A. Material or equipment specified by manufacturer's name is being used as a basis of standard, unless otherwise noted. Engineer will be the sole judge on the equivalence of substituted equipment and materials.

B. It shall be Contractor's responsibility to verify that submitted substitute equipment will fit in space available. Contractor's submittal for acceptance of the substitute shall include a written statement of whether or not such acceptance would require any subsequent or associated changes to the Drawings or Specifications. Any such changes shall be described in writing, briefly but complete.

C. Contractor shall be responsible for the costs of any such modifications due to substitution of materials or equipment for that which was specified or scheduled. The cost shall be complete; that is, it shall include the cost effect of any and all other trades.

D. Engineer may request detailed Shop Drawing or plan layouts of mechanical rooms or systems of the substituted equipment.

1.14 SAFETY

A. General: Contractor shall be responsible for initiating, maintaining, and supervising all safety precautions and programs in connection with the Work, and Contractor shall comply with all laws governing safety, specifically the "Occupational Safety and Health Standards" and the "Safety and Health Regulations for Construction," state and federal.

B. According to OSHA, a hazardous chemical is any chemical which is a physical hazard or a health hazard. This may include items such as paints, solvents, adhesives, sealants, cleaners, etc. If a Contractor produces, uses, or stores hazardous chemicals at the workplace, then Contractor shall develop, implement, and maintain a hazard communication program in compliance with the latest OSHA requirements. In Projects with multiple tenants in which the building is partially occupied during all or part of the Project, Contractor shall inform the Building Manager or Owner, according to OSHA guidelines, of any hazardous chemicals being produced, stored, or used in the building so that other tenants may be notified. Contractor shall employ required methods of training, information, handling, ventilation, labeling, storing, disposal, and removal of hazardous chemicals.

1.15 LABELING

A. Each device for which an independent testing authority has established a standard shall have affixed a label indicating its compliance and listing. Refer to General Conditions for list of such independent testing authorities.

1.16 SITE VISIT REPORTS

A. During the course of the job, Engineer will make Site visits to observe Work in progress and will subsequently prepare a written Site visit report, which will be sent to Contractor and to whomever else Engineer desires. Contractor shall prepare a written and typed response within 7 calendar days of his receiving the Site visit report. General Contractor shall include in his response the following information.

1. Date of Site visit by Engineer.
2. Date of receipt of the Site visit report.
3. Name and title of the preparer of the response.
4. An item number referenced to the Site report.
5. A brief three- or four-word description of the item.
6. Contractor or Subcontractor affected.
7. The proposed course of action.
8. An expected time of completion of the action.

1.17 CUTTING AND PATCHING

A. No joists, beams, girders, columns, slabs, or other structural elements shall be cut, drilled, or altered in any way by Contractor without first obtaining written permission and instructions from Engineer.

B. Where it is necessary to cut through any non-structural elements of walls, floors, or ceilings to permit the installation of any Work under this Contract, or to repair any defects that may appear up to the expiration of the guarantee, such cutting shall be done by Contractor with as little damage as reasonably possible to the element being cut or to adjacent elements.

C. After the necessary Work has been completed, the damage shall be repaired by the respective Contractor, who shall pay all costs of such cutting, repairs, and patching. All patching or sealing of cuts, penetrations, etc., including final appearance of same, shall be done to the approval of Engineer.

PART 2 - PRODUCTS

2.1 MATERIALS

A. All materials shall be new and of specified quality, unless specifically noted otherwise. Materials shall be free from defects. Where manufacturer names are mentioned in the Specifications or on the Drawings, it has been done in order to establish a standard of quality and construction.

B. Contractor will be responsible for transportation of his material to and from the job Site and will be responsible for the storage and protection of his materials and Work until the final acceptance of the job. At the end of each day of Work, each Contractor is responsible for covering or protecting his Work and/or materials that may be susceptible to damage even if such damage is the result of unforeseen causes, e.g., an overnight thunderstorm. Failure to do so will be sufficient cause for rejection of any item in question, and any such item shall be replaced by Contractor at no cost to Owner.

C. Contractor shall verify that all pieces of equipment will fit through available openings in the building and that all equipment can be installed without modification of building structure.

2.2 EQUIPMENT SCHEDULE

A. All equipment major items are specified in the equipment schedules on the Drawings and shall be new and furnished complete with all accessories normally supplied with the catalog item listed and all other accessories necessary for a complete and satisfactory installation.

B. Equipment items so noted will require start-up by factory trained personnel. Equipment items so noted will require factory approved service personnel who shall provide all service, including all parts and all labor, as requested by Owner, during the full period of equipment warranty.

2.3 EQUIPMENT RATINGS

A. Equipment capacities as scheduled on the Drawings are at Project Site altitude. Capacities of submitted equipment must be corrected for Project Site altitude unless otherwise noted.

2.4 WORKMANSHIP

A. The workmanship shall, in all respects, be of the highest grade, and all construction shall be done according to the best practices of the trade. Piping, ducting and conduit shall be concealed unless otherwise noted, and installed square to the building lines. Any Work not meeting this requirement shall be replaced or rebuilt without extra expense to Owner.

2.5 V-BELT DRIVES

A. V-belt drives shall be of fabric and rubber construction of approved manufacture. Multiple belts shall be matched and all belts shall be adjusted to drive the apparatus properly and to prevent slippage and undue wear in starting motor nameplate rating.

2.6 BELTGUARDS

A. Contractor shall provide for each V-belt drive a painted steel belt guard, which shall be constructed around an angle iron frame, securely bolted to the floor or apparatus. The guard shall completely enclose drives and pulleys and be constructed to comply with all safety requirements. Hinged access doors not less than 6- by 6-inch shall be provided for access to motors and fan shaft for test purposes.

2.7 ELECTRICAL WIRING AND CONTROL EQUIPMENT

A. All disconnects, motor starters, relays, wiring, etc. shall comply with all requirements of Section 26 05 00 "Basic Electrical Methods" of the electrical Specifications.

B. Mechanical Contractor must refer to the electrical control equipment and wiring shown on the Electrical Drawings. Any changes or additions required by specified or substituted equipment furnished shall be the complete responsibility of Contractor furnishing the equipment.

C. All electrical equipment characteristics (voltage, etc.) must be VERIFIED by Mechanical Contractor prior to ordering. It is imperative that voltage and phase characteristics are checked with the Electrical Drawings.

D. All motors shall be built in accordance with the current applicable IEEE, ASA, and NEMA standards. All general-purpose motors shall be open drip-proof machines for installation indoors and/or in protected locations. Totally enclosed fan cooled (TEFC) motors shall be used in all areas of exposure to weather or other environmental contamination. Motors shall be rated explosion-proof when located in hazardous atmospheres. Type II weather-protected motors may be used in lieu of TEFC motors on roof fan units and similar equipment. Motors mounted in direct sun shall be provided with a shield to for direct radiation from the sun when the sun is 45 degrees F or greater above the horizon.

E. Unless indicated otherwise, motors shall be NEMA design B with a service factor of 1.15 with 40 degrees C rise and total temperature rise of 65 degrees C ambient and when powered from the system voltage feeding the motor. TEFC motors shall have a service factor of 1.00 with total temperature rise of 65 degrees C in the above conditions. Single-phase motors shall be NEMA Type N split-phase induction motors with built-in thermal protectors. Single-phase motors connected on loads requiring high starting torque shall be capacitor-start induction motors.

F. All motors shall be all copper wound, high power factor, high efficiency motors. Electric motors shall be an energy efficient type as defined in the latest edition of NEMA document number MG1. Motor efficiency shall be made available to Engineer as required.

G. If there is not a separate "Controls Contractor" for this Project, Mechanical Contractor is responsible for providing and installing all control wiring. Wiring and conduit is to be provided and installed as directed under Division 26 Specifications.

2.8 EQUIPMENT AND PIPING SUPPORTS

A. All supporting systems for piping, equipment, and materials supported by the building structure shall be submitted to the Engineer for approval prior to purchase and installation.

B. Roof Supports:

1. Manufacturer's installation recommendations vary depending on roof types, but Contractor is responsible for verifying the roof type and adhering strictly to the appropriate set of manufacturer's installation instructions.

2.9 ROOF PENETRATIONS

A. Piping:

1. Penetration shall be accomplished with factory-made assemblies designed specifically for the purpose. The use of pitch pans or pitch pockets is not allowed. Contractor shall provide a factory-made penetration assembly as follows:

a. For pipes, conduits, etc., up to 3 inches in diameter that can or are intended to be turned to horizontal after passing through the roof (e.g., small electrical conduit, gas piping, refrigerant lines, water pipes, etc.) the device shall consist of a curb assembly with a welded 18 gauge galvanized steel shell and base, 1-1/2 inches thick 3 pounds per cubic foot rigid insulation, 0.50-inch aluminum or 20 gauge galvanized cap with minimum 3-inch over hang and 1-inch rigid insulation, and 2- x 6-inch wood nailer. Product shall be Custom Curb Model CPC, ThyCurb Model RP-2 with TC-1, 2, or 3 curb, or approved equivalent.

B. Ductwork with Equipment:

1. Each pierce of roof mounted equipment such as exhaust or supply fans, relief or intake hoods, packaged rooftop air conditioners, air handlers, etc., shall be provide and installed with an insulated roof curb designed to mate with the equipment and provide a weatherproof enclosure. In the event that a presinsulated curb is not available, an uninsulated curb is acceptable if Contractor provides and installs field insulation per manufacturer's instructions. Contractor shall provide the roof curb(s) to Roofing Contractor for installation.

C. General:

1. All roof flashing assemblies and roof curbs shall be closely coordinated with other Work through Roofing Contractor to ensure that the flashing, canting, insulation type and location, etc., is correct and appropriate for the particular roof construction type.
2. Each roof curb shall be selected and provided so that the top of the curb shall be level after installation. Provide tapered curb as required to match roof slope. The curb shall provide a minimum clearance of 10 inches between the top of the finished roof surface and the top of the wood nailer, continuous around the curb perimeter.
3. Each roof penetration location shown on the Drawings is approximate. Refer to the Engineerural and Structural Drawings for the structural openings. Refer to "Cutting and Patching" paragraph in this Section of this Specification for more information.
4. Provide each roof curb with other options as scheduled on the Drawings.

2.10 ACCESSIBILITY

A. Access Panels:
1. Access panels shall be provided wherever necessary for possible future replacement, adjustment, or maintenance of operating devices such as machinery, valves, dampers, switches, relays, etc., or to other critical non-operating devices such as pull boxes, inspection parts, gauges, etc. Such access panels shall be provided and install by Contractor, whether or not shown on the Drawings, and shall be brought to the attention of Engineer for approval of type, color, etc. Where access is provided in rated members, the access panels shall be of a type that maintains the integrity of the member penetrated.

B. Access to Equipment:
1. All pipes, tubing, conduit, etc., including but not limited to draining piping of any type, electrical conduit, wiring not in conduit, and pneumatic control tubing shall be installed in such a way so as not to prevent and/or not to make necessary difficult the removal, operation, use, or maintenance of equipment, access panels or doors, pathways (especially in attics or crawlspaces), observation ports, measurement, balancing devices, or junction boxes.
2. If access for these purposes is prevented or made unreasonably difficult in the opinion of Engineer, then Contractor shall make modifications or repairs at no cost to anyone except Contractor. Such modifications or repairs shall be considered neither complete nor adequate until Engineer is satisfied that access for the above purpose is achieved.

2.11 PROTECTION OF PENETRATION

A. All penetrations of fire or smoke barriers shall be sealed, sleeves (if any), insulation (if any), and vibration isolation (if any) that maintain the fire or smoke resistance of the barrier in accordance with the latest edition of NFPA 101 Life Safety Code.
B. Contractor shall verify locations and type of all partitions penetrations from the Drawings. Sealing material and methods shall be per UL recommendations.

2.12 BEDDING COURSE

A. Bedding Course: Naturally or artificially graded mixture of natural or crushed gravel, crushed stone, and natural or crushed sand; ASTM D2940; except with 100 percent passing a 1-inch sieve and not more than 8 percent passing a No. 200 sieve.

PART 3 - EXECUTION

3.1 STORAGE

A. Provide for proper storage of all materials and equipment and assume responsibility for losses due to any cause. All storage shall be within the contract limits of the building Site or in a bonded warehouse. All equipment and materials must be covered and stored out of the elements; any item, which has become rusted, will not be permitted to be used.

B. Each Contractor shall provide temporary storage facilities suitable for equipment stored at the Job Site. Storage facilities shall be rainproof and lockable as required. Materials or equipment stored on Site but not in a lockable rainproof storage facility shall be stored above ground or above slab. Contractor shall take necessary precautions to prevent entry of and/or damage from dirt, trash, water, or vermin. Equipment not properly stored and protected shall be, at the discretion of Engineer, replaces at no cost to Owner. Roofs are not acceptable storage areas unless specifically allowed in writing by Engineer.

3.2 INSTALLATION AND ARRANGEMENT

A. Install all Work to permit removal (without damage to other parts) of coils, heat exchanger bundles, boiler tubes, fan shafts and wheels, filters, belt guards, sheaves and drives, and all other parts which might require periodic replacement or maintenance. Arrange pipes, ducts, and equipment to permit ready access to valves, traps, starters, motors, control components, and to clear opens of doors and of access panels.

B. Offsets, transitions, and changes in direction in pipes and ducts shall be made as required to maintain proper head room and pitch of sloping pipes whether or not indicated on the Drawings. Furnish and install all traps, air vents, sanitary vents, etc., as required to affect these offsets, transitions, and changes in direction.

C. Duct transitions and offsets required to connect ductwork to equipment shall be made as required whether or not indicated on the Drawings.

3.3 PROTECTION OF WORK AND PROPERTY

A. Where there are existing facilities, be responsible for protection thereof, whether or not such facility is to be removed or relocated or remain as installed. Moving or removing any facility must be done so as not to cause interruption to the Work or Owner's Operation.

B. All pipe and duct openings shall be closed with caps or plugs during installation. All fixtures shall be covered and protected against injury. At final completion, all Work shall be cleaned and delivered in an unblemished condition or refinished and repainted at the discretion of Engineer.

3.4 CONCEALED AND EXPOSED WORK

A. "Concealed" is intended to mean within such spaces as pipe chases, pipe trenches, above plaster ceilings, in walls and buried pipe is inaccessible when building is completed. "Exposed" is intended to be within equipment rooms, unfinished spaces, above "pushup" ceilings, accessible pipe tunnels, etc., where pipe is accessible.

3.5 CONCRETE

A. Mechanical Contractor shall coordinate all requirements for concrete. All concrete shall be furnished under the Engineer Divisions of these Specifications.

3.6 FIELD MEASUREMENTS

A. Contractor shall verify the dimensions and conditions governing Work at the Project Site. He shall examine adjoining Work on which his Work is dependent, for perfect efficiency, and shall report any Work which must be corrected.

3.7 LUBRICATION

A. Contractor shall provide all oil and grease for the operating of all equipment until acceptance. Contractor shall be held responsible for all damage to bearings while the equipment is being operated by him up to the date of acceptance of the equipment. Contractor shall protect all bearings and shafts during installation and shall thoroughly grease the steel shafts to prevent corrosion.

3.8 MANUFACTURER'S DIRECTION

A. Contractor shall install all equipment in strict accordance with all directions and recommendations furnished by the manufacturer. Where such directions conflict with the Plans and Specifications, Contractor shall report such conflicts to Engineer, who shall make changes deemed necessary and desirable.

3.9 FLUSHING, CLEANING, AND STERILIZING

A. Before final connections are made in the piping systems, all piping shall be blown out with air and then completely washed out with cleaning compounds. The systems shall be flushed for complete removal of all foreign materials. Furnish all temporary connections, valves, etc., required for this purpose.
B. After flushing, sterilize the domestic water systems with an approved chlorinating agent to provide a dosage on not less than 50 ppm. After minimum contact period of 8 hours, the system shall be flushed with clean water until the residual chlorine is no greater than the city water.

3.10 TESTS

A. Test all, storm, vent, and waste lines with either a 5 psi air test or a standing water test of 12 feet of head pressure. Test shall be held for a minimum of 2 hours, or as required by local code.
B. Test all new domestic cold, hot, and recirculating hot water service lines at 50 psig above operating pressure, without exceedidng the pressure rating of the piping materials. Test shall be held for a minimum of 2 hours, or as required by local code.
C. Test all new gas lines at 1-1/2 times the proposed maximum working pressure, but not less than 5 psig. Test to be held for a minimum of 2 hours, or as required by local code.
D. Repair leaks and defects with new materials and retest piping or portion thereof until satisfactory results are obtained.
E. All tests shall be witnessed and approved by Engineer and the local authority having jurisdiction before covering or insulating. The satisfactory operation of blowers, pumps and other equipment with moving parts shall be demonstrated to Engineer. Equipment without movable parts shall have pressure or other tests performed by Contractor to demonstrate satisfactory operation.
F. Furnish all instruments, pumps, blowers, and equipment required for the testing.
G. Provide written copies of these test reports for inclusion on the Operations and Maintenance Manuals and submit one copy to Engineer.

3.11 PAINTING

A. Surfaces of all equipment and material not provided with a factory finish coat shall be thoroughly cleaned, primed (if not factory primed) and finish coated with a high quality alkyd industrial enamel of a color chosen by Owner.

3.12 SPECIAL OPENINGS

A. Contractor shall attempt to schedule delivery of all large equipment requiring special openings for installation prior to enclosing of area. Where this is not possible written notice of required openings which must be provided shall be listed by size and location and submitted to General Contractor prior to enclosing of areas involved. Work required to construct openings and the associated cost of enclosing them shall be done at no additional cost to Owner.

3.13 PLACING IN OPERATION

A. All ducts, pipes, equipment, controls, etc., shall be cleaned of plaster and other foreign debris
B. Before final acceptance, all strainers shall be thoroughly cleaned or replaced, all bearings shall be oiled or greased and all drains shall be cleaned out and primed. All permanent filters shall be cleaned; throwaway type filters shall be replaced with new filters.
C. The systems shall be placed in operation.
D. Contractor shall verify that all controls are set to meet operating conditions specified.
   1. Example: Boiler operating control set at 180 degrees F. Limit control set at 200 degrees F.
E. Contractor shall verify that all pieces of equipment are operable and that all sequence of controls are being met.
F. Contractor to adjust seating through the first year as required by Engineer.

3.14 BALANCING, TESTING, AND ADJUSTING THE MECHANICAL SYSTEMS

A. Contractor shall include in their proposal the cost of testing, adjusting, and balancing (TAB). Mechanical Contractor shall provide a TAB report that shows the corrected airflow or coordinate with TAB Contractor to balance the system and correct deficiencies noted by the TAB Contractor during TAB testing.

3.15 OPERATION AND MAINTENANCE INSTRUCTIONS

A. Contractor shall prepare and provide electronic copies of operating and maintenance manuals. Contractor shall deliver the electronic sets to Engineer for approval. Each manual shall be in a ring binder and shall be indexed with dividers for each Section. Delivery of required documents is a condition of final acceptance.
B. Each manual shall contain, but not limited to, the following general sections:
   1. Certificates of acceptance from the inspecting authorities.
   2. Waiver of all liens.
   3. Warranties with starting dates and end dates for each pieces of equipment and/or for each system (warranties shall begin on date of substantial completion and acceptance by Owner).

4. Names, telephone, and fax numbers and addresses of all subcontractors, vendors, manufacturer's representatives, and warranties providers.
5. Certification letters from each Contractor that each system furnished and installed by that Contractor and/or subcontractors is started-up, balanced, adjusted, and checked for proper operation in accordance with the intent of the Contract Documents.
6. Spare parts lists for each piece of equipment.
7. Lubrication charts showing type of lubrication and application methods and frequencies.
8. Filter cleaning or replacement schedule (on Contractor's letterhead stationary).
9. Preventative maintenance schedule for checking all items such as belt drives, safety controls, oil and refrigerant charges, and seasonal changer over recommendations. Cleaning of all strainers, traps, coils, tower pans, tubes, sprays, etc. (on Contractor's letterhead stationary).
10. Normal operating instructions including a sequence of operations (on Contractor's letterhead stationary).
11. Instructions as to procedures to be followed for emergency situations, such as alarms or safety items being tripped (on Contractor's letterhead stationary).
12. Instruction on who to call for service during guarantee period (on Contractor's letterhead stationary).
13. Copies of As-Built Drawings on reproducible vellum as produced by a Xerox or photographic process.
14. Copies of all approved Shop Drawing Submittals including nameplate date, design parameters, name, telephone and fax numbers, address of vendor, manufacturer's representative and warrantee provider.

C. Approval will not be given for final payment until the tests, balancing, and operating instruction portions have been completed.

3.16 INSTRUCTIONS TO OWNER

A. Contractor shall instruct Owner's operating personnel in the operations and maintenance of all mechanical systems and equipment. There shall be a minimum of 2 hours of training. Contractor shall furnish any special servicing tools required for maintenance.

B. Contractor shall conduct a demonstration of the installation upon completion and final acceptance of the Work. There shall be a minimum 2-hour demonstration. Prior to this, all Work shall have been completed, tested, balanced, and placed in operation. Qualified personnel must be present at the demonstration to operate all the systems and prove the performance of the equipment. The schedule for this demonstration shall be coordinated with Engineer.

3.17 EXCAVATION FOR PIPE AND CONDUIT

A. Excavate trenches to indicated gradients, lines, depths, and elevations.

B. Excavate trenches to uniform widths to provide a working clearance on each side of pipe or conduit. Excavate trench walls vertically from trench bottom to 12 inches higher than top of pipe or conduit, unless otherwise indicated.

C. Trench Bottoms: Excavate and shape trench bottoms to provide uniform bearing and support of pipes and conduit. Shape subgrade to provide continuous support for bells, joints, and barrels of pipes and for joints, fittings, and bodies of conduits. Remove projecting stones and sharp objects along trench subgrade. Level bottom of all trenches and cover all PVC pipe with processed chat.

1. For pipes and conduit less than 6 inches in nominal diameter and flat-bottomed, multiple-duct conduit units, hand excavate trench bottoms and support pipe and conduit on an undisturbed subgrade.
2. For pipes and conduit 6 inches or larger in nominal diameter, shape bottom of trench to support bottom 90 degrees of pipe circumference. Fill depressions with tamped sand backfill.
3. Excavate trenches 4 inches deeper than elevation required in rock or other unyielding bearing material to allow for bedding course.

D. Place backfill and fill materials in layers not more than 8 inches in loose depth for material compacted by heavy compaction equipment, and not more than 4 inches in loose depth for material compacted by hand-operated tampers.

E. All piping and conduit trenches across pavement shall be backfilled with two-sack concrete to within 12 inches of finished grade.

F. Compact soil to not less than the following percentages of maximum dry unit weight according to ASTM D698:
1. Under structures, building slabs, steps, and pavements, scarify and recompact top 12 inches of existing subgrade and each layer of backfill or fill material at 95 percent.
2. Under walkways, scarify and recompact top 6 inches below subgrade and compact each layer of backfill or fill material at 92 percent.
3. Under lawn or unpaved areas, scarify and recompact top 6 inches below subgrade and compact each layer of backfill or fill material at 85 percent.

G. Install detectable warning tape above conduits and pipe, 12 inches below finished grade, except 6 inches below subgrade under pavements and slabs.

H. Protection:
1. Protecting Graded Areas: Protect newly graded areas from traffic, freezing, and erosion. Keep free of trash and debris.
2. Repair and reestablish grades to specified tolerances where completed or partially completed surfaces become eroded, rutted, settled, or where they lose compaction due to subsequent construction operations or weather conditions.
    a. Scarify or remove and replace soil material to depth as directed by Engineer; reshape and recompact.
3. Where settling occurs before Project correction period elapses, remove finished surfacing, backfill with additional soil material, compact, and reconstruct surfacing.
    a. Restore appearance, quality, and condition of finished surfacing to match adjacent Work, and eliminate evidence of restoration to the greatest extent possible.

I. Disposal of Surplus and Waste Materials:
1. Disposal: Remove surplus satisfactory soil and waste material, including unsatisfactory soil, trash, and debris, and legally dispose of it off Owner's property unless otherwise directed by Owner.
2. Repair: Any damage to shrubs, grass or structures shall be repaired to previous condition by Contractor at no additional expense to Owner.

J. Bracing and Sheeting: Open cut trenches shall be sheeted and braced as required by OSHA and the requirements of the State of Texas as necessary for the safety of workers or the protection of property.

END OF SECTION

SECTION 23 05 00.20 - BASIC MECHANICAL MATERIALS AND METHODS

PART 1 - GENERAL

1.1 SUMMARY

A. Section Includes:
   1. The following basic mechanical materials and methods to complement other Division 23 Sections.
      a. Piping materials and installation instructions common to most piping systems.
      b. Concrete equipment base construction requirements.
      c. Equipment nameplate data requirements.
      d. Labeling and identifying mechanical systems and equipment is specified in Section 23 05 53 "Identification for HVAC and Plumbing Piping and Equipment."
      e. Nonshrink grout for equipment installations.
      f. Field-fabricated metal and wood equipment supports.
      g. Installation requirements common to equipment specification Sections.
      h. Cutting and patching.
      i. Touch-up painting and finishing.
   2. Pipe and pipe fitting materials are specified in piping system Sections.

B. Related Requirements:
   1. Division 01 Specification Sections apply to Work of this Section.

1.2 DEFINITIONS

A. Pipe, pipe fittings, and piping include tube, tube fittings, and tubing.

B. Finished Spaces: Spaces other than mechanical and electrical equipment rooms, furred spaces, pipe and duct shafts, unheated spaces immediately below the roof, spaces above ceilings, unexcavated spaces, crawl spaces, and tunnels.

C. Exposed Interior Installations: Exposed to view indoors. Examples include finished occupied spaces and mechanical equipment rooms.

D. Exposed Exterior Installations: Exposed to view outdoors, or subject to outdoor ambient temperatures and weather conditions. Examples include rooftop locations.

E. Concealed Interior Installations: Concealed from view and protected from physical contact by building occupants. Examples include above ceilings and in duct shafts.

F. Concealed Exterior Installations: Concealed from view and protected from weather conditions and physical contact by building occupants, but subject to outdoor ambient temperatures. Examples include installations within unheated shelters.

1.3 SUBMITTALS

A. General: Submit the following according to the Conditions of the Contract and Division 01 and Section 23 05 00 "General Mechanical Requirements."

B. Product data for following piping specialties:
   1. Mechanical sleeve seals.
   2. Dielectric Fittings.
   3. Access Doors.

1.4 QUALITY ASSURANCE

A. Qualify welding processes and operators for piping according to ASME "Boiler and Pressure Vessel Code," Section IX, "Welding and Brazing Qualifications."
   1. Comply with provisions of ASME B31 Series "Code for Pressure Piping."
   2. Certify that each welder has passed AWS qualification tests for the welding processes involved and that certification is current.

B. ASME A13.1 for lettering size, length of color field, colors, and viewing angles of identification devices.

C. Equipment Selection: Equipment of greater or larger power, dimensions, capacities, and ratings may be furnished provided such proposed equipment is approved in writing and connecting mechanical and electrical services, circuit breakers, conduit, motors, bases, and equipment spaces are increased. No additional costs will be approved for these increases, if larger equipment is approved. If minimum energy ratings or efficiencies of the equipment are specified, the equipment must meet the design requirements and commissioning requirements.

1.5 DELIVERY, STORAGE, AND HANDLING

A. Deliver pipes and tubes with factory-applied end-caps. Maintain end-caps through shipping, storage, and handling to prevent pipe-end damage and prevent entrance of dirt, debris, and moisture.

B. Protect stored pipes and tubes from moisture and dirt. Elevate above grade. When stored inside, do not exceed structural capacity of the floor.

C. Protect flanges, fittings, and piping specialties from moisture and dirt.

D. Protect stored plastic pipes from direct sunlight. Support to prevent sagging and bending.

1.6 SEQUENCING AND SCHEDULING

A. Coordinate mechanical equipment installation with other building components.

B. Arrange for chases, slots, and openings in building structure during progress of construction to allow for mechanical installations.

C. Coordinate the installation of required supporting devices and set sleeves in poured-in-place concrete and other structural components as they are constructed.

D. Sequence, coordinate, and integrate installations of mechanical materials and equipment for efficient flow of the Work. Coordinate installation of large equipment requiring positioning prior to closing in the building.

E. Coordinate connection of electrical services.

F. Coordinate connection of mechanical systems with exterior underground and overhead utilities and services. Comply with requirements of governing regulations, franchised service companies, and controlling agencies.

G. Coordinate requirements for access panels and doors where mechanical items requiring access are concealed behind finished surfaces.

H. Coordinate installation of identifying devices after completing covering and painting where devices are applied to surfaces. Install identifying devices prior to installing acoustical ceilings and similar concealment.

PART 2 - PRODUCTS

2.1 PIPE AND PIPE FITTINGS

A. Refer to individual piping system specification Sections for pipe and fitting materials and joining methods.
B. Pipe Threads: ASME B1.20.1 for factory-threaded pipe and pipe fittings.

2.2 JOINING MATERIALS

A. Refer to individual piping system Specification Sections in Division 23 for special joining materials not listed below.
B. Pipe Flange Gasket Materials: Suitable for the chemical and thermal conditions of the piping system contents.
   1. ASME B16.21, nonmetallic, flat, asbestos-free, 1/8-inch maximum thickness, except where thickness or specific material is indicated.
      a. Full-Face Type: For flat-face, Class 125 cast-iron and cast-bronze flanges.
      b. Narrow-Face Type: For raised-face, Class 250 cast iron and steel flanges.
   2. ASME B16.20 for grooved, ring-joint, steel flanges.
   3. AWWA C110, rubber, flat face, 1/8-inch-thick, except where other thickness is indicated; and full-face or ring type, except where type is indicated.
C. Flange Bolts and Nuts: ASME B18.2.1, carbon steel, except where other material is indicated.
D. Plastic Pipe Flange Gasket, Bolts, and Nuts: Type and material recommended by piping system manufacturer, except where other type or material is indicated.
E. Solder Filler Metal: ASTM B32.
   1. Alloy Sn95 or Alloy Sn94: Tin (approximately 95 percent) and silver (approximately 5 percent), having 0.10 percent lead content.
F. Brazing Filler Metals: AWS A5.8.
   1. BCuP Series: Copper-phosphorus alloys.
   2. BAg1: Silver alloy.
G. Welding Filler Metals: Comply with AWS D10.12 for welding materials appropriate for wall thickness and chemical analysis of steel pipe being welded.
H. Solvent Cements: Manufacturer's standard solvents complying with the following:
   1. Acrylonitrile-Butadiene-Styrene (ABS): ASTM D2235.
   2. Chlorinated Poly (Vinyl Chloride) (CPVC): ASTM F493.
   3. Poly (Vinyl Chloride) (PVC): ASTM D2564.
   4. PVC to ABS Transition: Made to requirements of ASTM D3138, color other than orange.
I. Plastic Pipe Seals: ASTM F477, elastomeric gasket.
J. Flanged, Ductile-Iron Pipe Gasket, Bolts, and Nuts: AWWA C110, rubber gasket, carbon steel bolts and nuts.
K. Couplings: Iron body sleeve assembly, fabricated to match outside diameters of plain-end pressure pipes.
   1. Sleeve: ASTM A126, Class B, gray iron.
   2. Followers: ASTM A47, Grade 32510 or ASTM A536 ductile iron.
   3. Gaskets: Rubber.
   4. Bolts and Nuts: AWWA C111.
   5. Finish: Enamel paint.

2.3 PIPING SPECIALTIES

A. Escutcheons: Manufactured wall, ceiling, and floor plates; deep-pattern type where required to conceal protruding fittings and sleeves.
   1. Inside Diameter: Closely fit around pipe, tube, and insulation.
   2. Outside Diameter: Completely cover opening.
   3. Cast Brass: One-piece, with setscrew.
      a. Finish: Rough brass.
      b. Finish: Polished chrome plate.
   4. Cast Brass: Split casting, with concealed hinge and setscrew.
      a. Finish: Rough brass.
      b. Finish: Polished chrome plate.
   5. Stamped Steel: One-piece, with setscrew and chrome-plated finish.
   6. Stamped Steel: One-piece, with spring clips and chrome-plated finish.
   7. Stamped Steel: Split plate, with concealed hinge, setscrew, and chrome-plated finish.
   8. Stamped Steel: Split plate, with concealed hinge, spring clips, and chrome-plated finish.
   9. Stamped Steel: Split plate, with exposed-rivet hinge, setscrew, and chrome-plated finish.
   10. Stamped Steel: Split plate, with exposed-rivet hinge, spring clips, and chrome-plated finish.
   11. Cast-Iron Floor Plate: One-piece casting.

B. Dielectric Fittings: Assembly or fitting having insulating material isolating joined dissimilar metals to prevent galvanic action and stop corrosion.
   1. Description: Combination of copper alloy and ferrous; threaded, solder, plain, and weld neck end types and matching piping system materials.
   2. Insulating Material: Suitable for system fluid, pressure, and temperature.
   3. Dielectric Unions: Factory-fabricated, union assembly for 250-psig minimum working pressure at a 180 degrees F temperature.
   4. Dielectric Flanges: Factory-fabricated, companion-flange assembly for 150- or 300-psig minimum pressure to suit system pressures.
   5. Dielectric-Flange Insulation Kits: Field-assembled, companion-flange assembly, full-face or ring type. Components include neoprene or phenolic gasket, phenolic or polyethylene bolt sleeves, phenolic washers, and steel backing washers.
      a. Provide separate companion flanges and steel bolts and nuts for 150- or 300-psig minimum working pressure to suit system pressures.
   6. Dielectric Couplings: Galvanized-steel coupling, having inert and noncorrosive, thermoplastic lining, with threaded ends and 300-psig minimum working pressure at 225 degrees F temperature.
   7. Dielectric Nipples: Electroplated steel nipple, having inert and noncorrosive thermoplastic lining, with combination of plain, threaded, or grooved end types and 300-psig working pressure at 225 degrees F temperature.

C. Mechanical Sleeve Seals: Modular, watertight mechanical type. Components include interlocking synthetic rubber links shaped to continuously fill annular space between pipe and sleeve. Connecting bolts and pressure plates cause rubber-sealing elements to expand when tightened.

D. Sleeves: The following materials are for wall, floor, slab, and roof penetrations:
   1. Steel Sheet Metal: 24-gauge or heavier galvanized sheet metal, round tube closed with welded longitudinal joint.
   2. Steel Pipe: ASTM A53, Type E, Grade A, Schedule 40, galvanized, plain ends.
   3. Cast-Iron: Cast or fabricated wall pipe equivalent to ductile-iron pressure pipe, having plain ends and integral water stop, except where other features are specified.
   4. Wall Penetration Systems: Wall sleeve assembly, consisting of housing, gaskets, and pipe sleeve, with 1 mechanical-joint end conforming to AWWA C110 and one plain pipe-sleeve end.
      a. Penetrating Pipe Deflection: 5 percent without leakage.
      b. Housing: Ductile-iron casting having waterstop and anchor ring, with ductile-iron gland, steel studs and nuts, and rubber gasket conforming to AWWA C111, of housing and gasket size as required to fit penetrating pipe.
      c. Pipe Sleeve: AWWA C151, ductile-iron pipe.
      d. Housing-to-Sleeve Gasket: Rubber or neoprene push-on type of manufacturer's design.
   5. Cast-Iron Sleeve Fittings: Commercially made sleeve having an integral clamping flange, with clamping ring, bolts, and nuts for membrane flashing.
      a. Underdeck Clamp: Clamping ring with setscrews.

2.4 GROUT

A. Nonshrink, Nonmetallic Grout: ASTM C1107, Grade B.
   1. Characteristics: Post-hardening, volume-adjusting, dry, hydraulic-cement grout, nonstaining, noncorrosive, nongaseous, and recommended for interior and exterior applications.
   2. Design Mix: 5,000-psi, 28-day compressive strength.
   3. Packaging: Premixed and factory-packaged.

2.5 ACCESS DOORS

A. Flush mounted steel access doors with 16 gauge frame and 14 gauge panel. Prime coat finish. Concealed spring hinges, screwdriver cam-lock. Doors in fire rated surfaces shall be UL listed and labeled. Doors to be Milcor or approved equivalent.

PART 3 - EXECUTION

3.1 PIPING SYSTEMS - COMMON REQUIREMENTS

A. General: Install piping as described below, except where system Sections specify otherwise. Individual piping system Specification Sections in Divisions 23 specify piping installation requirements unique to the piping system.

B. General Locations and Arrangements: Drawings (plans, schematics, and diagrams) indicate general location and arrangement of piping systems. Indicated locations and arrangements were used to size pipe and calculate friction loss, expansion, pump sizing, and other design considerations. Install piping as indicated, except where deviations to layout are approved on Coordination Drawings.

C. Install piping at indicated slope.

D. Install components having pressure rating equal to or greater than system operating pressure.
E. Install piping in concealed interior and exterior locations, except in equipment rooms and service areas.
F. Install piping free of sags and bends.
G. Install exposed interior and exterior piping at right angles or parallel to building walls. Diagonal runs are prohibited, except where indicated.
H. Install piping tight to slabs, beams, joists, columns, walls, and other building elements. Allow sufficient space above removable ceiling panels to allow for ceiling panel removal.
I. Install piping to allow application of insulation plus 1-inch clearance around insulation.
J. Locate groups of pipes parallel to each other, spaced to permit valve servicing.
K. Install fittings for changes in direction and branch connections.
L. Install couplings according to manufacturer's printed instructions.
M. Install pipe escutcheons for pipe penetrations of concrete and masonry walls, wall board partitions, and suspended ceilings according to the following:
    1. Chrome-Plated Piping: Cast-brass, one-piece, with setscrew, and polished chrome-plated finish. Use split-casting escutcheons, where required, for existing piping.
    2. Uninsulated Piping Wall Escutcheons: Cast-brass or stamped-steel, with setscrew.
    3. Uninsulated Piping Floor Plates in Utility Areas: Cast-iron floor plates.
    4. Insulated Piping: Cast-brass or stamped-steel, with concealed hinge, spring clips, and chrome-plated finish.
    5. Piping in Utility Areas: Cast-brass or stamped-steel, with setscrew or spring clips.
N. Sleeves are required for core drilled holes.
O. Install sleeves for pipes passing through concrete and masonry walls, concrete floor and roof slabs, and where indicated.
P. Install sleeves for pipes passing through concrete and masonry walls, gypsum-board partitions, concrete floor and roof slabs, and where indicated.
    1. Cut sleeves to length for mounting flush with both surfaces.
        a. Exception: Extend sleeves installed in floors of mechanical equipment areas or other wet areas 4 inches above finished floor level. Extend cast-iron sleeve fittings below floor slab as required to secure clamping ring where specified.
    2. Build sleeves into new walls and slabs as Work progresses.
    3. Install large enough sleeves to provide 1/4-inch annular clear space between sleeve and pipe or pipe insulation. Use the following sleeve materials:
        a. Steel Pipe Sleeves: For pipes smaller than 6 inches.
        b. Steel Sheet-Metal Sleeves: For pipes 6 inches and larger that penetrate gypsum board partitions.
        c. Cast-Iron Sleeve Fittings: For floors having membrane waterproofing. Secure flashing between clamping flanges. Install section of cast-iron soil pipe to extend sleeve to 4 inches above finished floor level. Flashing is specified in Division 07.
            1) Seal space outside of sleeve fittings with nonshrink, nonmetallic grout.
    4. Except for below-grade wall penetrations, seal annular space between sleeve and pipe or pipe insulation, using elastomeric joint sealants specified in Division 07.

Q. Above Grade, Exterior Wall, and Pipe Penetrations: Seal penetrations using sleeves and mechanical sleeve seals. Size sleeve for 1-inch annular clear space between pipe and sleeve for installation of mechanical seals.
   1. Install steel pipe for sleeves smaller than 6 inches.
   2. Install cast-iron wall pipes for sleeves 6 inches and larger.
   3. Assemble and install mechanical seals according to manufacturer's printed instructions.

R. Below Grade, Exterior Wall, and Pipe Penetrations: Install cast-iron wall pipes for sleeves. Seal pipe penetrations using mechanical sleeve seals. Size sleeve for 1-inch annular clear space between pipe and sleeve for installation of mechanical seals.
   1. Below Grade, Exterior Wall, and Pipe Penetrations: Install ductile-iron wall penetration system sleeves according to manufacturer's printed installation instructions.

S. Fire Barrier Penetrations: Maintain indicated fire rating of walls, partitions, ceilings, and floors at pipe penetrations. Seal pipe penetrations with firestopping sealant material. Firestopping materials are specified in Division 07.

T. Verify final equipment locations for roughing in.

U. Refer to equipment specifications in other Sections for roughing-in requirements.

V. Piping Joint Construction: Join pipe and fittings as follows and as specifically required in individual piping system Sections.
   1. Ream ends of pipes and tubes and remove burrs. Bevel plain ends of steel pipe.
   2. Remove scale, slag, dirt, and debris from inside and outside of pipe and fittings before assembly.
   3. Soldered Joints: Construct joints according to AWS "Soldering Manual," in "The Soldering of Pipe and Tube" chapter.
   4. Brazed Joints: Construct joints according to AWS "Brazing Manual" in the "Pipe and Tube" chapter.
   5. Threaded Joints: Thread pipe with tapered pipe threads according to ASME B1.20.1. Cut threads full and clean using sharp dies. Ream threaded pipe ends to remove burrs and restore full inside diameter. Join pipe fittings and valves as follows:
      a. Note the internal length of threads in fittings or valve ends, and proximity of internal seat or wall, to determine how far pipe should be threaded into joint.
      b. Apply appropriate tape or thread compound to external pipe threads (except where dry seal threading is specified).
      c. Align threads at point of assembly.
      d. Tighten joint with wrench. Apply wrench to valve end into which pipe is being threaded.
      e. Damaged Threads: Do not use pipe or pipe fittings having threads that are corroded or damaged. Do not use pipe sections that have cracked or open welds.
   6. Welded Joints: Construct joints according to AWS D10.12 "Recommended Practices and Procedures for Welding Low Carbon Steel Pipe" using qualified processes and welding operators according to the "Quality Assurance" Article.
   7. Flanged Joints: Align flange surfaces parallel. Select appropriate gasket material, size, type, and thickness for service application. Install gasket concentrically positioned. Assemble joints by sequencing bolt tightening to make initial contact of flanges and gaskets as flat and parallel as possible. Use suitable lubricants on bolt threads. Tighten bolts gradually and uniformly using torque wrench.

8. Plastic Pipe and Fitting Solvent-Cement Joints: Clean and dry joining surfaces by wiping with clean cloth or paper towels. Join pipe and fittings according to the following standards:
    a. Comply with ASTM F402 for safe handling of solvent-cement and primers.
    b. Acrylonitrile-Butadiene-Styrene (ABS): ASTM D2235 and ASTM D2661.
    c. Chlorinated Poly (Vinyl Chloride) (CPVC): ASTM D2846 and ASTM F493.
    d. Poly (Vinyl Chloride) (PVC) Pressure Application: ASTM D2672.
    e. Poly (Vinyl Chloride) (PVC) Non-Pressure Application: ASTM D2855.
    f. PVC to ABS (Non-Pressure) Transition: Procedure and solvent cement described in ASTM D3138.
9. Plastic Pipe and Fitting Heat-Fusion Joints: Prepare pipe and fittings and join with heat-fusion equipment according to manufacturer's printed instructions.
    a. Plain-End Pipe and Fittings: Butt joining.
    b. Plain-End Pipe and Socket-Type Fittings: Socket joining.

W. Piping Connections: Except as otherwise indicated, make piping connections as specified below.
1. Install unions in piping 2 inches and smaller adjacent to each valve and at final connection to each piece of equipment having a 2-inch or smaller threaded pipe connection.
2. Install flanges in piping 2-1/2 inches and larger adjacent to flanged valves and at final connection to each piece of equipment having flanged pipe connection.
3. Dry Piping Systems (Gas): Install dielectric unions and flanges to connect piping materials of dissimilar metals.
4. Wet Piping Systems (Water): Install dielectric coupling and nipple fittings to connect piping materials of dissimilar metals.

3.2 EQUIPMENT INSTALLATION - COMMON REQUIREMENTS

A. Install equipment to provide the maximum possible headroom where mounting heights are not indicated.
B. Install equipment according to approved submittal data. Portions of the Work are shown only in diagrammatic form. Refer conflicts to Architect.
C. Install equipment level and plumb, parallel and perpendicular to other building systems and components in exposed interior spaces, except where otherwise indicated.
D. Install mechanical equipment to facilitate servicing, maintenance, and repair or replacement of equipment components. Connect equipment for ease of disconnecting, with minimum of interference with other installations. Extend grease fittings to an accessible location.
E. Install equipment giving right-of-way to piping systems installed at a required slope.

3.3 ACCESS DOORS

A. Furnish an access door for each pipe chase for each floor. This includes both toilet plumbing chases and pipe riser chases. Access doors assembly to be size 16 by 16 inches. Access doors are not shown on floor plans. Access door locations shall be field verified.
B. Also, furnish access doors in all non-removable ceiling and in partitions and walls where necessary access to plumbing cleanouts, shock absorbers, fire dampers, manual dampers, valves and other mechanical devices requiring access. Size these as required for access with minimum size of 12 by 12 inches.

C. Any access doors furnished for installation in fire rated surfaces or assembly shall carry an approved fire rating for that use.
D. Any access doors furnished for installation in glued on acoustical surfaces or assembly shall have recessed door to allow installation of tiles.
E. Provide all access doors to General Contractor for them to construct into the building.

3.4 PAINTING AND FINISHING

A. Refer to Division 09 for field painting requirements.
B. Damage and Touch-Up: Repair marred and damaged factory-painted finishes with materials and procedures to match original factory finish.

3.5 CONCRETE BASES

A. Construct concrete equipment bases of dimensions indicated, but not less than 4 inches larger than supported unit in both directions. Follow supported equipment manufacturer's setting templates for anchor bolt and tie locations. Use 3,000-psi, 28-day compressive strength concrete and reinforcement use fibrillated or monofilament polypropylene fibers engineered and designed for use in concrete, complying with ASTM C 1116, Type III, 1/2- to 1-1/2 inches long. Uniformly disperse in concrete mix at manufacturer's recommended rate, but not less than 1.5 pound per cubic yard.

3.6 ERECTION OF METAL SUPPORTS AND ANCHORAGE

A. Cut, fit, and place miscellaneous metal supports accurately in location, alignment, and elevation to support and anchor mechanical materials and equipment.
B. Field Welding: Comply with AWS D1.1 "Structural Welding Code - Steel."

3.7 ERECTION OF WOOD SUPPORTS AND ANCHORAGE

A. Cut, fit, and place wood grounds, nailers, blocking, and anchorage to support and anchor mechanical materials and equipment.
B. Select fastener sizes that will not penetrate members where oppoSite side will be exposed to view or will receive finish materials. Make tight connections between members. Install fasteners without splitting wood members.
C. Attach to substrates as required to support applied loads.

3.8 CUTTING AND PATCHING

A. Cut, channel, chase, and drill floors, walls, partitions, ceilings, and other surfaces necessary for mechanical installations. Perform cutting by skilled mechanics of the trades involved.
B. Repair cut surfaces to match adjacent surfaces.

3.9 GROUTING

A. Install nonmetallic, nonshrink grout for mechanical equipment base bearing surfaces, pump and other equipment base plates, and anchors. Mix grout according to manufacturer's printed instructions.
B. Clean surfaces that will come into contact with grout.

C. Provide forms for placement of grout, as required.
D. Avoid air entrapment when placing grout.
E. Place grout to completely fill equipment bases.
F. Place grout on concrete bases to provide a smooth bearing surface for equipment.
G. Place grout around anchors.
H. Cure placed grout according to manufacturer's printed instructions.

3.10 DEMOLITION

A. Disconnect, demolish, and remove Work specified under Divisions 23 and as indicated.
B. Where pipe, duct Work, insulation, or equipment to remain is damaged or disturbed, remove damaged portions and install new products of equal capacity and quality.
C. Accessible Work: Remove indicated exposed pipe and duct Work in its entirety.
D. Abandoned Work: Cut and remove buried pipe abandoned in place, 2 inches beyond the face of adjacent construction. Cap and patch surface to match existing finish.
E. Removal: Remove indicated equipment from the Project Site.
F. Temporary Disconnection: Remove, store, clean, reinstall, reconnect, and make operational equipment indicated for relocation.

END OF SECTION

SECTION 23 05 53 - IDENTIFICATION FOR HVAC PIPING AND EQUIPMENT

PART 1 - GENERAL

1.1 SUMMARY

A. Section Includes:
   1. Nameplates.
   2. Tags.
   3. Stencils.
   4. Pipe markers.

B. Related Sections:
   1. Division 01 Specification Sections apply to Work of this Section.

1.2 REFERENCES

A. American Society of Mechanical Engineers:
   1. ASME A13.1 - Scheme for the Identification of Piping Systems.

1.3 SUBMITTALS

A. Division 01 and Section 23 05 00 "General Mechanical Requirements."
B. Product Data: Submit manufacturers catalog literature for each product required.
C. Manufacturer's Installation Instructions: Indicate installation instructions, special procedures, and installation.
D. Manufacturer's Certificate: Certify products meet or exceed specified requirements.

1.4 CLOSEOUT SUBMITTALS

A. Project Record Documents: Record actual locations of tagged valves; include valve tag numbers.

1.5 QUALITY ASSURANCE

A. Conform to ASME A13.1 for color scheme for identification of piping systems and accessories.

1.6 QUALIFICATIONS

A. Manufacturer: Company specializing in manufacturing products specified in this section with minimum 3 years' experience.
B. Installer: Company specializing in performing Work of this section with minimum 3 years' experience.

1.7 FIELD MEASUREMENTS

A. Verify field measurements prior to fabrication.

PART 2 - PRODUCTS

2.1 NAMEPLATES

A. Nameplates
   1. Manufacturers:
      a. Seton Identification Products.
      b. Substitutions: Section 23 05 00 "Generald Mechanical Requirements.
B. Product Description: Laminated three-layer plastic with engraved black letters on light contrasting background color.

2.2 TAGS

A. Metal Tags
   1. Manufacturers:
      a. Brass with stamped letters; tag size minimum 1-1/2 inches diameter with finished edges.
B. Tag Chart: Typewritten letter size list of applied tags and location in anodized aluminum frame.

2.3 STENCILS

A. Stencils: With clean cut symbols and letters of following size:
   1. Up to 2 inches Outside Diameter of Insulation or Pipe: 1/2-inch high letters.
   2. Two and one half to 6 inches Outside Diameter of Insulation or Pipe: 1-inch high letters.
   3. Over 6 inches Outside Diameter of Insulation or Pipe: 1-3/4 inches high letters.
   4. Equipment: 1-3/4 inches high letters.
B. Stencil Paint: As specified in Section 09 90 00, semi-gloss enamel, colors and lettering size conforming to ASME A13.1.

2.4 PIPE MARKERS

A. Color and Lettering: Conform to ASME A13.1.
B. Plastic Pipe Markers:
   1. Factory fabricated, flexible, semi-rigid plastic, preformed to fit around pipe or pipe covering. Larger sizes may have maximum sheet size with spring fastener.
C. Plastic Tape Pipe Markers:
   1. Flexible, vinyl film tape with pressure sensitive adhesive backing and printed markings.
D. Plastic Underground Pipe Markers:
   1. Bright colored continuously printed plastic ribbon tape, minimum 6 inches wide by 4 mil thick, manufactured for direct burial service. Markers used on nonmetallic pipe shall contain tracer wire.

PART 3 - EXECUTION

3.1 PREPARATION

A. Degrease and clean surfaces to receive adhesive for identification materials.
B. Prepare surfaces in accordance with Division 09 for stencil painting.

3.2 INSTALLATION

A. Apply stencil painting in accordance with Division 09.
B. Install identifying devices after completion of coverings and painting.
C. Install plastic nameplates with corrosive-resistant mechanical fasteners, or adhesive.
D. Install tags using corrosion resistant chain. Number tags consecutively by location.
E. Install underground plastic pipe markers 8 to 10 inches below finished grade, directly above buried pipe.
F. Identify air handling units, pumps, heat transfer equipment, tanks, and water treatment devices with plastic nameplates. Identify in-line pumps and other small devices with tags.
G. Identify control panels and major control components outside panels with plastic nameplates.
H. Identify valves in main and branch piping with tags.
I. Identify air terminal units and radiator valves with numbered tags.
J. Tag automatic controls, instruments, and relays. Key to control schematic.
K. Identify piping, concealed or exposed, with plastic pipe markers, plastic tape pipe markers,or stenciled painting. Use tags on piping 3/4-inch diameter and smaller. Identify service, flow direction, and pressure. Install in clear view and align with axis of piping. Locate identification not to exceed 20 feet on straight runs including risers and drops, adjacent to each valve and tee, at each side of penetration of structure or enclosure, and at each obstruction.

END OF SECTION

SECTION 23 07 05 - HVAC AND PLUMBING INSULATION

PART 1 - GENERAL

1.1 SUMMARY

A. Section Includes:
   1. Ductwork insulation.
   2. Duct liner.
   3. Insulation jackets.
   4. Piping system insulation.
   5. Insulation accessories including vapor retarders, jackets, and accessories.

B. Related Requirements:
   1. Division 01 Specification Sections apply to Work of this Section.

1.2 REFERENCES

A. ASTM International:
   1. ASTM A167 - Standard Specification for Stainless and Heat-Resisting Chromium-Nickel Steel Plate, Sheet, and Strip.
   2. ASTM B209 - Standard Specification for Aluminum and Aluminum-Alloy Sheet and Plate.
   3. ASTM C177 - Standard Test Method for Steady-State Heat Flux Measurements and Thermal Transmission Properties by Means of the Guarded-Hot-Plate Apparatus.
   4. ASTM C195 - Standard Specification for Mineral Fiber Thermal Insulating Cement.
   5. ASTM C449 - Standard Specification for Mineral Fiber Hydraulic-Setting Thermal Insulating and Finishing Cement.
   6. ASTM C518 - Standard Test Method for Steady-State Heat Flux Measurements and Thermal Transmission Properties by Means of the Heat Flow Meter Apparatus.
   7. ASTM C533 - Standard Specification for Calcium Silicate Block and Pipe Thermal Insulation.
   8. ASTM C534 - Standard Specification for Preformed Flexible Elastomeric Cellular Thermal Insulation in Sheet and Tubular Form.
   9. ASTM C547 - Standard Specification for Mineral Fiber Pipe Insulation.
   10. ASTM C552 - Standard Specification for Cellular Glass Thermal Insulation.
   11. ASTM C553 - Standard Specification for Mineral Fiber Blanket Thermal Insulation for Commercial and Industrial Applications.
   12. ASTM C591 - Standard Specification for Unfaced Preformed Rigid Cellular Polyisocyanurate Thermal Insulation.
   13. ASTM C592 - Standard Specification for Mineral Fiber Blanket Insulation and Blanket-Type Pipe Insulation (Metal-Mesh Covered) (Industrial Type).
   14. ASTM C610 - Standard Specification for Molded Expanded Perlite Block and Pipe Thermal Insulation.
   15. ASTM C612 - Standard Specification for Mineral Fiber Block and Board Thermal Insulation.
   16. ASTM C795 - Standard Specification for Thermal Insulation for Use in Contact with Austenitic Stainless Steel.

17. ASTM C921 - Standard Practice for Determining the Properties of Jacketing Materials for Thermal Insulation.
18. ASTM C1071 - Standard Specification for Thermal and Acoustical Insulation (Glass Fiber, Duct Lining Material).
19. ASTM C1126 - Standard Specification for Faced or Unfaced Rigid Cellular Phenolic Thermal Insulation.
20. ASTM C1136 - Standard Specification for Flexible, Low Permeance Vapor Retarders for Thermal Insulation.
21. ASTM C1290 - Standard Specification for Flexible Fibrous Glass Blanket Insulation Used to Externally Insulate HVAC Ducts.
22. ASTM D1784 - Standard Specification for Rigid Poly (Vinyl Chloride) (PVC) Compounds and Chlorinated Poly (Vinyl Chloride) (CPVC) Compounds.
23. ASTM E84 - Standard Test Method for Surface Burning Characteristics of Building Materials.
24. ASTM E96 - Standard Test Methods for Water Vapor Transmission of Materials.
25. ASTM E162 - Standard Test Method for Surface Flammability of Materials Using a Radiant Heat Energy Source.
26. ASTM G21 - Standard Practice for Determining Resistance of Synthetic Polymeric Materials to Fungi.

B. Sheet Metal and Air Conditioning Contractors:
   1. SMACNA - HVAC Duct Construction Standard - Metal and Flexible.

1.3 SUBMITTALS

A. Refer to Division 01 and Section 23 05 00 "General Mechanical Requirements" for submittals.
B. Product Data: Submit product description, thermal characteristics and list of materials and thickness for each service, and location.
C. Manufacturer's Installation Instructions: Submit manufacturers published literature indicating proper installation procedures.
D. Manufacturer's Certificate: Certify products meet or exceed specified requirements.

1.4 QUALIFICATIONS

A. Manufacturer: Company specializing in manufacturing products specified in this Section with minimum 3 years' experience.
B. Applicator: Company specializing in performing Work of this Section with minimum 3 years' experience approved by manufacturer.

1.5 DELIVERY, STORAGE, AND HANDLING

A. Accept materials on Site in original factory packaging, labeled with manufacturer's identification, including product density and thickness.
B. Protect insulation from weather and construction traffic, dirt, water, chemical, and mechanical damage, by storing in original wrapping.

1.6 ENVIRONMENTAL REQUIREMENTS

A. Install insulation only when ambient temperature and humidity conditions are within range recommended by manufacturer.
B. Maintain temperature during and after installation for minimum period of 24 hours.

1.7 FIELD MEASUREMENTS

A. Verify field measurements prior to fabrication.

1.8 WARRANTY

A. Refer to Section 23 05 00 "General Mechanical Requirements" for product warranties.

PART 2 - PRODUCTS

2.1 MAN MADE MINERAL FIBER

A. Manufacturers:
   1. Johns Manville.
   2. Knauf.
   3. Owens Corning.
   4. Substitutions: Refer to Section 23 05 00 "General Mechanical Requirements" for substitutions.
B. Insulation: ASTM C547 Mineral Fiber Pipe Insulation, Type I, 850 degrees F.
C. Vapor Retarder Jacket:
   1. ASTM C921, White Kraft paper with glass fiber yarn, bonded to aluminized film.
   2. Moisture Vapor Transmission: ASTM E96; 0.02 perm-inches.
D. Tie Wire: 0.048-inch stainless steel with twisted ends on maximum 12-inch centers.
E. Vapor Retarder Lap Adhesive: Compatible with insulation.
F. Insulating Cement/Mastic: ASTM C195; hydraulic setting on mineral wool.
G. Glass Fiber Fabric:
   1. Cloth: Untreated; 9 ounces per square yard weight.
   2. Blanket: 1.0 pound per cubic feet density.
   3. Weave: 10 by 10.
H. Indoor Vapor Retarder Finish:
   1. Cloth: Untreated; 9 ounces per square yard weight.
   2. Vinyl emulsion type acrylic, compatible with insulation, white color.
I. Insulating Cement: ASTM C449.

2.2 MINERAL FIBER, FLEXIBLE

A. Manufacturers:
   1. Johns Manville.
   2. Knauf.
   3. Owens Corning.
   4. Substitutions: Refer to Section 23 05 00 "General Mechanical Requirements" for substitutions.
B. Insulation: ASTM C553 Mineral Fiber Blanket Thermal Insulation for Commercial and Industrial Applications, Type II.
   1. Density: 0.75 PCF.
C. Vapor Retarder Jacket:
   1. Kraft paper with glass fiber yarn and bonded to aluminized film.
   2. Moisture vapor transmission: ASTM E96; 0.02 perm.
   3. Secure with pressure sensitive tape.

D. Vapor Retarder Tape: Kraft paper reinforced with glass fiber yarn and bonded to aluminized film, with pressure sensitive rubber-based adhesive.
E. Tie Wire: Annealed steel, 16 gauge.

2.3 ELASTOMERIC CELLULAR FOAM

A. Manufacturers:
   1. Armaflex.
   2. Substitutions: Refer to Section 23 05 00 "General Mechanical Requirements" for substitutions.
B. Preformed Flexible Elastomeric Cellular Thermal Insulation in Sheet and Tubular form: ASTM C534; Type I, Tubular form.
C. Elastomeric Foam Adhesive: Air dried, contact adhesive, compatible with insulation.

2.4 PIPE INSULATION AND EQUIPMENT JACKETS

A. PVC Plastic Pipe Jacket:
   1. Manufacturers:
      a. Johns Manville.
      b. Knauf.
      c. Owens Corning.
      d. Substitutions: Refer to Section 23 05 00 "General Mechanical Requirements" for substitutions.
   2. Product Description: ASTM D1784, one-piece molded type fitting covers and sheet material, off-white color.
   3. Thickness: 15 mil.
   4. Connections: Brush-on welding adhesive.
B. PVC Plastic Equipment Jacket:
   1. Manufacturers:
      a. Johns Manville.
      b. Knauf.
      c. Owens Corning.
      d. Substitutions: Refer to Section 23 05 00 "General Mechanical Requirements" for substitutions.
   2. Product Description: Sheet material, off-white color.
   3. Minimum Service Temperature: Minus 40 degrees F.
   4. Maximum Service Temperature: 150 degrees F.
   5. Moisture Vapor Transmission: ASTM E96; 0.002 perm-inches.
   6. Thickness: 15 mil.
   7. Connections: Brush-on welding adhesive.
C. Covering Adhesive Mastic: Compatible with insulation.
D. Aluminum Pipe Jacket:
   1. ASTM B209.
   2. Thickness: 0.020-inch thick
   3. Finish: Stucco embossed.
   4. Jointing: Longitudinal slip joints and 2-inch laps.
   5. Fittings: 0.016-inch thick die shaped fitting covers with factory attached protection liner.
   6. Metal Jacket Bands: 3/8-inch wide; 0.015-inch thick aluminum.

PART 3 - EXECUTION

3.1 EXAMINATION

A. Verify piping, equipment and ductwork has been tested before applying insulation materials.
B. Verify surfaces are clean and dry, with foreign material removed.

3.2 INSTALLATION

A. Exposed Piping: Locate insulation and cover seams in least visible locations. Provide PVC jacketing.
B. Insulated pipes conveying fluids below ambient temperature: Insulate entire system including fittings, valves, unions, flanges, strainers, flexible connections, pump bodies, and expansion joints.
C. Man made mineral fiber insulated pipes conveying fluids below ambient temperature:
   1. Furnish factory-applied or field-applied vapor retarder jackets. Secure factory-applied jackets with pressure sensitive adhesive self-sealing longitudinal laps and butt strips. Secure field-applied jackets with outward clinch expanding staples and seal staple penetrations with vapor retarder mastic.
   2. Insulate fittings, joints, and valves with molded insulation of like material and thickness as adjacent pipe. Finish with glass cloth and vapor retarder adhesive or PVC fitting covers.
D. For hot piping conveying fluids over 140 degrees F, insulate flanges and unions at equipment.
E. Man made mineral fiber insulated pipes conveying fluids above ambient temperature:
   1. Furnish factory-applied or field-applied standard jackets. Secure with outward clinch expanding staples or pressure sensitive adhesive system on standard factory-applied jacket and butt strips or both.
   2. Insulate fittings, joints, and valves with insulation of like material and thickness as adjoining pipe. Finish with glass cloth and adhesive or PVC fitting covers.
F. Inserts and Shields:
   1. Application: Piping or Equipment 1-1/2 inches diameter or larger.
   2. Shields: Galvanized steel between pipe hangers or pipe hanger rolls and inserts.
   3. Insert location: Between support shield and piping and under finish jacket.
   4. Insert configuration: Minimum 6 inches long, of thickness and contour matching adjoining insulation; may be factory fabricated.
   5. Insert material: Compression resistant insulating material suitable for planned temperature range and service.
G. Continue insulation through penetrations of building assemblies or portions of assemblies having fire resistance rating of 1 hour or less. Provide intumescent firestopping when continuing insulation through assembly. Finish at supports, protrusions, and interruptions. Refer to Division 07 for penetrations of assemblies with fire resistance rating greater than 1 hour.
H. Factory Insulated Equipment: Do not insulate.
I. Exposed Equipment: Locate insulation and cover seams in least visible locations.
J. Apply insulation close to equipment by grooving, scoring, and beveling insulation. Fasten insulation to equipment with studs, pins, clips, adhesive, wires, or bands.

K. Fill joints, cracks, seams, and depressions with bedding compound to form smooth surface. On cold equipment, use vapor retarder cement.

L. Insulated Equipment Containing Fluids Below Ambient Temperature: Insulate entire system.

M. Mineral fiber insulated equipment containing fluids below ambient temperature: Provide vapor retarder jackets, factory-applied or field-applied. Finish with glass-cloth and vapor barrier adhesive.

N. For hot equipment containing fluids over 140 degrees F, insulate flanges and unions with removable sections and jackets.

O. Mineral Fiber Insulated Equipment Containing Fluids Above Ambient Temperature: Provide standard jackets, with or without vapor retarder, factory-applied or field-applied. Finish with glass cloth and adhesive.

P. Finish insulation at supports, protrusions, and interruptions.

Q. Nameplates and ASME Stamps: Bevel and seal insulation around; do not insulate over.

R. Equipment Requiring Access for Maintenance, Repair, or Cleaning: Install insulation for easy removal and replacement without damage.

S. Insulated ductwork conveying air below ambient temperature:
   1. Provide insulation with vapor retarder jackets.
   2. Finish with tape and vapor retarder jacket.
   3. Continue insulation through walls, sleeves, hangers, and other duct penetrations.
   4. Insulate entire system including fittings, joints, flanges, fire dampers, flexible connections, and expansion joints.

T. Insulated ductwork conveying air above ambient temperature:
   1. Provide with or without standard vapor retarder jacket.
   2. Insulate fittings and joints. Where service access is required, bevel and seal ends of insulation.

U. External Duct Insulation Application:
   1. Secure insulation with vapor retarder with wires and seal jacket joints with vapor retarder adhesive or tape to match jacket.
   2. Secure insulation without vapor retarder with staples, tape, or wires.
   3. Install without sag on underside of ductwork. Use adhesive or mechanical fasteners where necessary to prevent sagging. Lift ductwork off trapeze hangers and insert spacers.
   4. Seal vapor retarder penetrations by mechanical fasteners with vapor retarder adhesive.
   5. Stop and point insulation around access doors and damper operators to allow operation without disturbing wrapping.

V. For hot equipment containing fluids over 140 degrees F, insulate flanges and unions with removable sections and jackets.

W. Exterior Applications: Provide vapor retarder jacket. Insulate fittings, joints, and valves with insulation of like material and thickness as adjoining pipe, and finish with glass mesh reinforced vapor retarder cement. Cover with aluminum jacket with seams located at 3 or 9 o' clock position on side of horizontal piping with overlap facing down to shed water.

3.3 SCHEDULES

A. Plumbing Systems:
   1. Domestic Hot Water Supply:
      a. Man-made Mineral Fiber Insulation:
         1) Pipe Size Range: 1.5-inch or less.
            a) Thickness: 1 inch.
         2) Pipe Size Range: Greater than 1.5 inches.
            a) Thickness: 2 inches.
         3) Runout Piping 4 feet or less:
            a) Pipe Size Range: 1 inch or less.
            b) Thickness: 1/2-inch.
   2. Domestic Cold Water:
      a. Man-made Mineral Fiber Insulation:
         1) Pipe Size Range: All sizes.
            a) Thickness: 1/2-inch.

B. Cooling Systems:
   1. Interior Condensate Drains and Refrigerant Suction Piping:
      a. Elastomeric Cellular Foam:
         1) Pipe Size Range: All sizes.
            a) Thickness: 3/4-inch.

C. Supply Ducts:
   1. Mineral Fiber, Flexible:
      a. Thickness: As required to meet R-6.

D. Return Ducts:
   1. Mineral Fiber, Flexible (return ducts without liner):
      a. Thickness: As required to meet R-6.

END OF SECTION

SECTION 23 23 00 - REFRIGERANT PIPING

PART 1 - GENERAL

1.1 SUMMARY

A. Section Includes:
   1. Refrigerant piping.
   2. Unions, flanges, and couplings.
   3. Valves.
   4. Refrigerant strainers.

B. Related Sections:
   1. Division 01 Specification Sections apply to Work of this Section.

1.2 REFERENCES

A. Air-Conditioning and Refrigeration Institute:
   1. ARI 495 - Refrigerant Liquid Receivers.
   2. ARI 710 - Liquid-Line Driers.
   3. ARI 730 - Flow-Capacity Rating and Application of Suction-Line Filters and Filter Dryers.
   4. ARI 750 - Thermostatic Refrigerant Expansion Valves.
   5. ARI 760 - Solenoid Valves for Use with Volatile Refrigerants.

B. American Society of Heating, Refrigerating and Air-Conditioning Engineers:
   1. ASHRAE 15 - Safety Code for Mechanical Refrigeration.

C. American Society of Mechanical Engineers:
   1. ASME B16.22 - Wrought Copper and Copper Alloy Solder Joint Pressure Fittings.
   2. ASME B16.26 - Cast Copper Alloy Fittings for Flared Copper Tubes.
   3. ASME B31.5 - Refrigeration Piping.
   4. ASME Section VIII - Boiler and Pressure Vessel Code - Pressure Vessels.

D. ASTM International:
   1. ASTM A53 - Standard Specification for Pipe, Steel, Black and Hot-Dipped, Zinc-Coated, Welded and Seamless.
   2. ASTM A234 - Standard Specification for Piping Fittings of Wrought Carbon Steel and Alloy Steel for Moderate and High Temperature Service.
   3. ASTM B88 - Standard Specification for Seamless Copper Water Tube.
   4. ASTM B280 - Standard Specification for Seamless Copper Tube for Air Conditioning and Refrigeration Field Service.
   5. ASTM F708 - Standard Practice for Design and Installation of Rigid Pipe Hangers.
   6. ASTM B749 - Standard Specification for Lead and Lead Alloy Strip, Sheet, and Plate Products.

E. American Welding Society:
   1. AWS A5.8 - Specification for Filler Metals for Brazing and Braze Welding.
   2. AWS D1.1 - Structural Welding Code - Steel.

F. Manufacturers Standardization Society of the Valve and Fittings Industry:
   1. MSS SP 58 - Pipe Hangers and Supports - Materials, Design and Manufacturer.
   2. MSS SP 69 - Pipe Hangers and Supports - Selection and Application.
   3. MSS SP 89 - Pipe Hangers and Supports - Fabrication and Installation Practices.

G. Underwriters Laboratories Inc.:
   1. UL 429 - Electrically Operated Valves.

1.3 SYSTEM DESCRIPTION

A. Where more than one piping system material is specified, provide compatible system components and joints. Use non-conducting dielectric connections when joining dissimilar metals in systems.

B. Provide flanges, unions, or couplings at locations requiring servicing. Use unions, flanges, or couplings downstream of valves and at equipment connections. Do not use direct welded or threaded connections to valves or equipment.

C. Provide pipe hangers and supports in accordance with ASME B31.5, ASTM F708, MSS SP 58, MSS SP 69, and MSS SP 89.

1.4 SUBMITTALS

A. Division 01 and Section 23 05 00 "Submittal Procedures."

B. Product Data:
   1. Piping: Submit data on pipe materials, fittings, and accessories.
   2. Valves: Submit manufacturer's catalog information with valve data and ratings for each service.

1.5 QUALITY ASSURANCE

A. Perform Work in accordance with ASME B31.5 code for installation of refrigerant piping systems.

B. Perform Work in accordance with AWS D1.1 for welding hanger and support attachments to building structure.

C. Perform Work in accordance with State and local standards.

1.6 QUALIFICATIONS

A. Manufacturer: Company specializing in manufacturing products specified in this section with minimum 3 years' documented experience.

B. Fabricator or Installer: Company specializing in performing Work of this section with minimum 3 years' experience.

1.7 DELIVERY, STORAGE, AND HANDLING

A. Dehydrate and charge refrigeration components including piping and receivers, seal prior to shipment. Maintain seal until connected into system.

B. Accept valves on site in shipping containers with labeling in place. Inspect for damage.

C. Provide temporary end caps and closures on piping and fittings. Maintain in place until installation.

D. Protect piping systems from entry of foreign materials by temporary covers, completing sections of the Work, and isolating parts of completed system.

1.8 ENVIRONMENTAL REQUIREMENTS

A. Do not install underground piping when bedding is wet or frozen.

1.9 FIELD MEASUREMENTS

A. Verify field measurements prior to fabrication.

1.10 WARRANTY

A. Division 01 and Section 23 05 00 "General Mechanical Requirements."

PART 2 - PRODUCTS

2.1 REFRIGERANT PIPING

A. Copper Tubing: ASTM B280, drawn.
   1. Fittings: ASME B16.22 wrought copper.
   2. Joints: Braze, AWS A5.8 BCuP silver/phosphorus/copper alloy with melting range 1,190 to ,480 degrees F.

2.2 UNIONS, FLANGES, AND COUPLINGS

A. Two inches and Smaller:
   1. Copper Pipe: Bronze, soldered joints.
B. Dielectric Connections: Union with galvanized or plated steel threaded end, copper solder end, water impervious isolation barrier.

2.3 VALVES

A. Ball Valves:
   1. Two piece bolted forged brass body with teflon ball seals and copper tube extensions, brass bonnet and seal cap, chrome plated ball, stem with neoprene ring stem seals, soldered ends.
   2. Maximum working pressure: 500 psig.
   3. Maximum working temperature: 325 degrees F.
B. Service Valves:
   1. Forged brass body with copper stubs, brass caps, removable valve core, integral ball check valve, flared or solder ends.
   2. Maximum working pressure: 500 psig.
C. Refrigerant Check Valves:
   1. Straight Through Type:
      a. Spring, neoprene seat.
      b. Maximum working pressure: 500 psig.
      c. Maximum working temperature: 250 degrees F.

2.4 REFRIGERANT STRAINERS

A. Straight Line or Angle Line Type:
   1. Brass or steel shell, steel cap and flange, and replaceable cartridge, with screen of stainless steel wire or monel reinforced with brass.
   2. Maximum working pressure: 430 psig.

PART 3 - EXECUTION

3.1 EXAMINATION

A. Verify excavations are to required grade, dry, and not over-excavated.

3.2 PREPARATION

A. Ream pipe and tube ends. Remove burrs.
B. Remove scale and dirt on inside and outside before assembly.
C. Prepare piping connections to equipment with flanges or unions.
D. Keep open ends of pipe free from scale and dirt. Protect open ends with temporary plugs or caps.

3.3 INSTALLATION - INSERTS

A. Provide inserts for placement in concrete forms.
B. Provide inserts for suspending hangers from reinforced concrete slabs and sides of reinforced concrete beams.
C. Provide hooked rod to concrete reinforcement section for inserts carrying pipe 4 inches and larger.
D. Where concrete slabs form finished ceiling, locate inserts flush with slab surface.
E. Where inserts are omitted, drill through concrete slab from below and provide through-bolt with recessed square steel plate and nut recessed into and grouted flush with slab.

3.4 INSTALLATION - PIPE HANGERS AND SUPPORTS

A. Refer to Section 22 05 09 "Hangers and Supports."

3.5 INSTALLATION - ABOVE GROUND PIPING SYSTEMS

A. Route piping parallel to building structure and maintain gradient.
B. Install piping to conserve building space, and not interfere with use of space.
C. Group piping whenever practical at common elevations.
D. Sleeve pipe passing through partitions, walls and floors. Refer to Section 23 05 00 "General Mechanical Requirements."
E. Install piping to allow for expansion and contraction without stressing pipe, joints, or connected equipment.
F. Provide access where valves and fittings are not exposed.
G. Arrange refrigerant piping to return oil to compressor. Provide traps and loops in piping, and provide double risers as required. Slope horizontal piping 0.40 percent in direction of flow.
H. Flood refrigerant piping system with nitrogen when brazing.

I. Where pipe support members are welded to structural building framing, scrape, brush clean, and apply one coat of zinc rich primer to welds.
J. Install valves with stems upright or horizontal, not inverted.
K. Insulate piping ; refer to Section 23 07 05 "HVAC and Plumbing Installation."
L. Fully charge completed system with refrigerant after testing.
M. Follow ASHRAE 15 procedures for charging and purging of systems and for disposal of refrigerant.
N. Install refrigerant piping in accordance with ASME B31.5.

3.6 FIELD QUALITY CONTROL

A. Test refrigeration system in accordance with ASME B31.5.
B. Pressure test refrigeration system with dry nitrogen to 200 psig.
C. Repair leaks.
D. Retest until no leaks are detected.

3.7 SCHEDULES

A. Copper Tube Hanger Spacing:
   1. Pipe Size 1/2-Inch:
      a. Maximum Hanger Spacing: 5 feet.
      b. Hanger Rod Diameter: 3/8-inch.
   2. Pipe Size 3/4-Inch:
      a. Maximum Hanger Spacing: 5 feet.
      b. Hanger Rod Diameter: 3/8-inch.
   3. Pipe Size 1 Inch:
      a. Maximum Hanger Spacing: 6 feet.
      b. Hanger Rod Diameter: 3/8-inch.
   4. Pipe Size 1-1/4 Inches:
      a. Maximum Hanger Spacing: 7 feet.
      b. Hanger Rod Diameter: 3/8-inch
   5. Pipe Size 1-1/2 Inches:
      a. Maximum Hanger Spacing: 8 feet.
      b. Hanger Rod Diameter: 3/8-inch.
   6. Pipe Size 2 Inches:
      a. Maximum Hanger Spacing: 8 feet.
      b. Hanger Rod Diameter: 3/8-inch.
   7. Pipe Size 2-1/2 Inches:
      a. Maximum Hanger Spacing: 9 feet.
      b. Hanger Rod Diameter: 1/2-inch.
   8. Pipe Size 3 Inches:
      a. Maximum Hanger Spacing: 10 feet.
      b. Hanger Rod Diameter: 1/2-inch.
   9. Pipe Size 4 Inches:
      a. Maximum Hanger Spacing: 10 feet.
      b. Hanger Rod Diameter: 1/2-inch.

END OF SECTION

SECTION 23 31 00 - HVAC DUCTS AND CASINGS

PART 1 - GENERAL

1.1 SUMMARY

A. Section Includes:
   1. Duct materials.
   2. Ductwork fabrication.

B. Related Requirements:
   1. Division 01 Specification Sections apply to Work of this Section.

1.2 REFERENCE STANDARDS

A. ASTM International:
   1. ASTM A36 - Standard Specification for Carbon Structural Steel.
   2. ASTM A90 - Standard Test Method for Weight Mass of Coating on Iron and Steel Articles with Zinc or Zinc-Alloy Coatings.
   3. ASTM A167 - Stainless and Heat-Resisting Chromium-Nickel Steel Plate, Sheet, and Strip.
   4. ASTM A568 - Standard Specification for Steel, Sheet, Carbon, Structural, and High-Strength, Low-Alloy, Hot-Rolled and Cold-Rolled, General Requirements for.
   5. ASTM A653 - Standard Specification for Steel Sheet, Zinc-Coated (Galvanized) or Zinc-Iron Alloy-Coated (Galvannealed) by the Hot-Dip Process.
   6. ASTM A1008 - Standard Specification for Steel, Sheet, Cold-Rolled, Carbon, Structural, High-Strength Low-Alloy, High-Strength Low-Alloy with Improved Formability, Solution Hardened, and Bake Hardenable.
   7. ASTM A1011 - Standard Specification for Steel, Sheet and Strip, Hot-Rolled, Carbon, Structural, High-Strength Low-Alloy, High-Strength Low-Alloy with Improved Formability, and Ultra-High Strength.
   8. ASTM B209 - Standard Specification for Aluminum and Aluminum-Alloy Sheet and Plate.
   9. ASTM C14 - Standard Specification for Nonreinforced Concrete Sewer, Storm Drain, and Culvert Pipe.
   10. ASTM C443 - Standard Specification for Joints for Concrete Pipe and Manholes, Using Rubber Gaskets.
   11. ASTM E84 - Standard Test Method for Surface Burning Characteristics of Building Materials.

B. National Fire Protection Association:
   1. NFPA 90A - Standard for the Installation of Air-Conditioning and Ventilating Systems.
   2. NFPA 90B - Standard for the Installation of Warm Air Heating and Air-Conditioning Systems.

C. Sheet Metal and Air Conditioning Contractors' National Association:
   1. SMACNA 016 - HVAC Air Duct Leakage Test Manual.
   2. SMACNA 1966 - HVAC Duct Construction Standards - Metal and Flexible.

D. Underwriters Laboratories Inc.:
   1. UL 181 - Factory-Made Air Ducts and Air Connectors.

1.3 PERFORMANCE REQUIREMENTS

A. Variation of duct configuration or sizes other than those of equivalent or lower loss coefficient is not permitted except by written permission. Size round ducts installed in place of rectangular ducts in accordance with ASHRAE table of equivalent rectangular and round ducts.

1.4 SUBMITTALS

A. Division 01 and Section 23 05 00 "General Mechnical Requirements."
B. Product Data: Submit manufacturer information for duct materials and, duct connectors.

C. Test Reports: Indicate pressure tests performed, including date, section tested, test pressure, and leakage rate according to SMACNA 016.
D. Manufacturer Installation Instructions:
   1. Submit special procedures for glass-fiber ducts.

1.5 CLOSEOUT SUBMITTALS

A. Project Record Documents:
   1. Record actual locations of ducts and duct fittings.
   2. Record changes in fitting location and type.
   3. Show additional fittings used.

1.6 QUALITY ASSURANCE

A. Perform Work according to SMACNA 1966.
B. Construct ductwork to NFPA 90A standards.

1.7 QUALIFICATIONS

A. Manufacturer: Company specializing in manufacturing products specified in this Section with minimum 3 years' experience.
B. Installer: Company specializing in performing Work of this Section with minimum 3 years' experience .

1.8 ENVIRONMENTAL REQUIREMENTS

A. Do not install duct sealant when temperatures are less than those recommended by sealant manufacturers.
B. Maintain temperatures during and after installation of duct sealant.

1.9 FIELD MEASUREMENTS

A. Verify field measurements prior to fabrications.

1.10 WARRANTY

A. Section 23 05 00 "General Mechanical Requirements" for product warranties.

PART 2 - PRODUCTS

2.1 DUCTS MATERIALS

A. Galvanized-Steel Ducts:
   1. Material: ASTM A653 galvanized-steel sheet.
   2. Quality: Lock forming.
   3. Finish: G90 zinc coating according to ASTM A90.

B. Fasteners: Rivets, bolts, or sheet metal screws.

2.2 FABRICATION

A. Rectangular Ducts:
   1. According to SMACNA 1966 and as indicated on Drawings.
   2. Provide duct material, gages, reinforcing, and sealing for indicated operating pressures.

B. Round Ducts:
   1. According to SMACNA 1966 and as indicated on Drawings.
   2. Seams: Longitudinal.
   3. Provide duct material, gages, reinforcing, and sealing for indicated operating pressures.

C. Tees, Bends, and Elbows:
   1. Minimum Radius:
      a. One and one half times centerline duct width.
      b. If not possible or if rectangular elbows are used, provide airfoil turning vanes.

D. Divergence:
   1. Increase duct sizes gradually, not exceeding 15 degrees of divergence wherever possible.
   2. Upstream of Equipment: Maximum 30 degrees.
   3. Downstream of Equipment: Maximum 45 degrees.

E. Takeoffs:
   1. Provide standard 45-degree lateral wye takeoffs.
   2. If not possible due to space limitations, provide 90-degree conical tee connections.

F. Sealing:
   1. Seal joints between duct sections and duct seams with welds, gaskets, mastic adhesives, mastic plus embedded fabric systems, or tape.
   2. Sealants, Mastics, and Tapes: Comply with UL 181A and provide products bearing appropriate UL 181A markings.
   3. Do not provide sealing products not bearing UL approval marking.

PART 3 - EXECUTION

3.1 EXAMINATION

A. Verify sizes of equipment connections before fabricating transitions.

3.2 INSTALLATION

A. Install and seal ducts according to SMACNA 1966.
B. During construction, install temporary closure of metal or taped polyethylene on open ductwork to prevent construction dust from entering ductwork system.
C. Hanger and Supports:
   1. Fabricate and support ducts according to SMACNA 1966.
   2. Threaded Rods: Provide double nuts and lock washers.

3.3 INTERFACE WITH OTHER PRODUCTS

A. Install openings in ductwork where required to accommodate thermometers and controllers. Install Pitot tube openings for testing of systems. Install Pitot tube complete with metal can with spring device or screw to prevent air leakage. Where openings are provided in insulated ductwork, install insulation material inside metal ring.

3.4 SCHEDULES

A. Ductwork Material Schedule:

AIR SYSTEM	MATERIAL
General Exhaust Supply Air Return Air	Steel

B. Ductwork Pressure Class Schedule:

AIR SYSTEM	MATERIAL
General Exhaust Supply Air Return Air	1-inch wg regardless of velocity

END OF SECTION

SECTION 23 33 00 - AIR DUCT ACCESSORIES

PART 1 - GENERAL

1.1 SUMMARY

A. Section Includes:
   1. Back-draft dampers.
   2. Duct access doors.
   3. Volume control dampers.
   4. Flexible duct connections.
   5. Duct test holes.

B. Related Sections:
   1. Division 01 Specification Section apply to Work of this Section.

1.2 REFERENCES

A. Air Movement and Control Association International, Inc.:
   1. AMCA 500 - Test Methods for Louvers, Dampers, and Shutters.

B. ASTM International:
   1. ASTM E1 - Standard Specification for ASTM Thermometers.

C. National Fire Protection Association:
   1. NFPA 90A - Standard for the Installation of Air Conditioning and Ventilating Systems.
   2. NFPA 92A - Recommended Practice for Smoke-Control Systems.

D. Sheet Metal and Air Conditioning Contractors:
   1. SMACNA - HVAC Duct Construction Standard - Metal and Flexible.

E. Underwriters Laboratories Inc.:
   1. UL 555 - Standard for Safety for Fire Dampers.
   2. UL 555C - Standard for Safety for Ceiling Dampers.
   3. UL 555S - Standard for Safety for Smoke Dampers.

1.3 SUBMITTALS

A. Division 01 and Section 23 05 00 "General Mechanical Requirements."

B. Product Data: Submit data for shop fabricated assemblies and hardware used.

C. Product Data: Submit for the following. Include where applicable electrical characteristics and connection requirements.
   1. Fire dampers including locations and ratings.
   2. Smoke dampers including locations and ratings.
   3. Backdraft dampers.
   4. Flexible duct connections.
   5. Volume control dampers.
   6. Duct access doors.
   7. Duct test holes.

D. Product Data: For fire dampers, smoke dampers, or combination fire and smoke dampers submit the following:
   1. Include UL ratings, dynamic ratings, leakage, pressure drop and maximum pressure data.
   2. Indicate materials, construction, dimensions, and installation details.
E. Manufacturer's Installation Instructions: Submit for Fire and Combination Smoke and Fire Dampers.

1.4 CLOSEOUT SUBMITTALS

A. Project Record Documents: Record actual locations of access doors and test holes.
B. Operation and Maintenance Data: Submit for Combination Smoke and Fire Dampers.

1.5 QUALITY ASSURANCE

A. Dampers tested, rated and labeled in accordance with the latest UL requirements.
B. Damper pressure drop ratings based on tests and procedures performed in accordance with AMCA 500.
C. Perform Work in accordance with State and local standards.

1.6 QUALIFICATIONS

A. Manufacturer: Company specializing in manufacturing products specified in this section with minimum 3 years experience.

1.7 DELIVERY, STORAGE, AND HANDLING

A. Protect dampers from damage to operating linkages and blades.
B. Delivery: Deliver materials to site in manufacturer's original, unopened containers and packaging, with labels clearly indicating manufacturer and material.
C. Storage: Store materials in a dry area indoor, protected from damage.
D. Handling: Handle and lift dampers in accordance with manufacturer's instructions. Protect materials and finishes during handling and installation to prevent damage.

1.8 FIELD MEASUREMENTS

A. Verify field measurements prior to fabrication.

1.9 COORDINATION

A. Coordinate Work where appropriate with building control Work.

1.10 WARRANTY

A. Section 23 05 00 "General Mechanical Requirements" for product warranties.

PART 2 - PRODUCTS

2.1 BACK-DRAFT DAMPERS

A. Product Description: Multi-Blade, back-draft dampers: Parallel-action, gravity-balanced, Galvanized 16 gauge thick steel, or extruded aluminum. Blades, maximum 6-inch width, center pivoted, with felt or flexible vinyl sealed edges. Blades linked together in rattle-free manner with 90-degree stop, steel ball bearings, and plated steel pivot pin. Furnish dampers with adjustment device to permit setting for varying differential static pressure.

2.2 DUCT ACCESS DOORS

A. Fabricate in accordance with SMACNA HVAC Duct Construction Standards - Metal and Flexible, and as indicated on Drawings.

B. Fabrication: Rigid and close fitting of galvanized steel with sealing gaskets and quick fastening locking devices. For insulated ductwork, furnish minimum 1-inch thick insulation with sheet metal cover.

1. Less than 12 inches square, secure with sash locks.
2. Up to 18 inches Square: Furnish two hinges and two sash locks.
3. Up to 24 x 48 inches: Three hinges and two compression latches.
4. Larger Sizes: Furnish additional hinge.
5. Access panels with sheet metal screw fasteners are not acceptable.

2.3 VOLUME CONTROL DAMPERS

A. Fabricate in accordance with SMACNA HVAC Duct Construction Standards - Metal and Flexible, and as indicated on Drawings.

B. Multi-Blade Damper: Fabricate of opposed blade pattern with maximum blade sizes 8- by 72-inch. Assemble center and edge crimped blades in prime coated or galvanized frame channel with suitable hardware.

C. End Bearings: Except in round ductwork 12 inches and smaller, furnish end bearings. On multiple blade dampers, furnish oil-impregnated nylon or sintered bronze bearings. Furnish closed end bearings on ducts having pressure classification over 2 inches wg.

D. Quadrants:

1. Furnish locking, indicating quadrant regulators on single and multi-blade dampers.
2. On insulated ducts mount quadrant regulators on standoff mounting brackets, bases, or adapters.
3. Where rod lengths exceed 30 inches furnish regulator at both ends.

2.4 FLEXIBLE DUCT CONNECTIONS

A. Fabricate in accordance with SMACNA HVAC Duct Construction Standards - Metal and Flexible.

B. Connector: Fabric crimped into metal edging strip.

1. Fabric: UL listed fire-retardant neoprene coated woven glass fiber fabric conforming to NFPA 90A, minimum density 30 ounces per square yard.
2. Net Fabric Width: Approximately 6 inches wide.
3. Metal: 3-inch wide, 24 gauge galvanized steel.

2.5 DUCT TEST HOLES

A. Permanent Test Holes: Factory fabricated, air tight flanged fittings with screw cap. Furnish extended neck fittings to clear insulation.

PART 3 - EXECUTION

3.1 EXAMINATION

A. Verify rated walls are ready for fire damper installation.
B. Verify ducts and equipment installation are ready for accessories.
C. Check location of air outlets and inlets and make necessary adjustments in position to conform to architectural features, symmetry, and lighting arrangement.

3.2 INSTALLATION.

A. Install in accordance with NFPA 90A, and follow SMACNA HVAC Duct Construction Standards - Metal and Flexible. Refer to Section 23 31 00 "HVAC Ducts and Casings" for duct construction and pressure class.
B. Install Work in accordance with State and local standards.
C. Install back-draft dampers on exhaust fans or exhaust ducts nearest to outside and where indicated on Drawings.
D. Access Doors: Install access doors at the following locations and as indicated on Drawings:
   1. Before and after each duct mounted filter.
   2. Before and after each duct mounted coil.
   3. Before and after each duct mounted fan.
   4. Before and after each automatic control damper.
   5. Before and after each fire damper, smoke dampe,r or combination fire and smoke damper.
   6. Downstream of each VAV box.
   7. Install at locations for cleaning kitchen exhaust ductwork in accordance with NFPA 96.
E. Access Door Sizes: Install minimum 8- by 8-inch size for hand access, 18- by 18-inch size for shoulder access, and as indicated on Drawings. Review locations prior to fabrication.
   1. Mark access doors for fire and smoke dampers on outside surface, with minimum 1/2-inch high letters reading: FIRE/SMOKE DAMPER, SMOKE DAMPER, OR FIRE DAMPER.
F. Install temporary duct test holes and required for testing and balancing purposes. Cut or drill in ducts. Cap with neat patches, neoprene plugs, threaded plugs, or threaded or twist-on metal caps.
G. Install permanent duct test holes and required for testing and balancing purposes.

H. Install fire dampers, combination fire and smoke dampers,and smoke dampers at locations as indicated on Drawings. Install with required perimeter mounting angles, sleeves, breakaway duct connections, corrosion resistant springs, bearings, bushings and hinges.
   1. Install smoke dampers and combination smoke and fire dampers in accordance with NFPA 92A.
   2. Install dampers square and free from racking with blades running horizontally.
   3. Do not compress or stretch damper frame into duct or opening.
   4. Handle damper using sleeve or frame. Do not lift damper using blades, actuator, or jack shaft.
   5. Install bracing for multiple section assemblies to support assembly weight and to hold against system pressure. Install bracing as needed.

3.3 DEMONSTRATION

A. Demonstrate re-setting of fire dampers to Owner's representative.

END OF SECTION

SECTION 23 34 00 - HVAC FANS

PART 1 - GENERAL

1.1 SUMMARY

A. Section Includes:
   1. Sidewalk propeller fans.
   2. Centrifugal square inline fans.

B. Related Sections:
   1. Division 01 Specification Sections apply to Work of this Section.

1.2 REFERENCES

A. American Bearing Manufacturers Association:
   1. ABMA 9 - Load Ratings and Fatigue Life for Ball Bearings.
   2. ABMA 11 - Load Ratings and Fatigue Life for Roller Bearings.

B. Air Movement and Control Association International, Inc.:
   1. AMCA 99 - Standards Handbook.
   2. AMCA 204 - Balance Quality and Vibration Levels for Fans.
   3. AMCA 210 - Laboratory Methods of Testing Fans for Aerodynamic Performance Rating.
   4. AMCA 300 - Reverberant Room Method for Sound Testing of Fans.
   5. AMCA 301 - Methods for Calculating Fan Sound Ratings from Laboratory Test Data.

C. American Refrigeration Institute:
   1. ARI 1060 - Air-to-Air Energy Recovery Ventilation Equipment Certification Equipment Program.

D. National Electrical Manufacturers Association:
   1. NEMA MG 1 - Motors and Generators.
   2. NEMA 250 - Enclosures for Electrical Equipment (1000 Volts Maximum).

E. Underwriters Laboratories Inc.:
   1. UL 705 - Power Ventilators.

1.3 SUBMITTALS

A. Section 23 05 00 " General Mechanical Requirements."

B. Product Data: Submit data on each type of fan and include accessories, fan curves with specified operating point plotted, power, RPM, sound power levels for both fan inlet and outlet at rated capacity, electrical characteristics and connection requirements.

C. Manufacturer's Installation Instructions: Submit fan manufacturer instructions.

D. Manufacturer's Certificate: Certify products meet or exceed specified requirements.

1.4 CLOSEOUT SUBMITTALS

A. Operation and Maintenance Data: Submit instructions for lubrication, motor and drive replacement, spare parts list, and wiring diagrams.

1.5 QUALITY ASSURANCE

A. Performance Ratings: Conform to AMCA 210 and bear AMCA Certified Rating Seal.
B. Sound Ratings: AMCA 301, tested to AMCA 300 ,and bear AMCA Certified Sound Rating Seal.
C. UL Compliance: UL listed and labeled, designed, manufactured, and tested in accordance with UL 705.
D. Balance Quality: Conform to AMCA 204.
E. Perform Work in accordance with State and local standards.

1.6 QUALIFICATIONS

A. Manufacturer: Company specializing in manufacturing products specified in this section with minimum 3 years' experience.
B. Installer: Company specializing in performing Work of this section with minimum 3 years' experience.

1.7 DELIVERY, STORAGE, AND HANDLING

A. Protect motors, shafts, and bearings from weather and construction dust.

1.8 FIELD MEASUREMENTS

A. Verify field measurements prior to fabrication.

1.9 WARRANTY

A. Section 23 05 00 "General Mechanical Requirements" for product warranties.

1.10 EXTRA MATERIALS

A. Furnish two sets of belts for each fan.

PART 2 - PRODUCTS

2.1 SIDEWALL PROPELLER FANS

A. Manufacturers:
1. Greenheck Corporation..
2. Loren Cook Company.
3. Substitutions: Section 23 05 00 "General Mechanical Requirements."
B. General Description:
1. Fan arrangement shall be exhaust.
2. Sidewall mounted applications.
3. Each fan shall bear a permanently affixed manufacturer's engraved metal nameplate containing the model number and individual serial number.

C. Wheel:
   1. Propeller constructed of cast aluminum tapered airfoil blades and cast aluminum hubs.
   2. Securely attached to motor shaft with a standard square key, set screw, and tapered bushing.
   3. Statically and dynamically balanced in accordance with AMCA Standard 204-05.
   4. The propeller and fan inlet will be meatched and shall have precise running tolerances for maximum performance and operating efficiency.

D. Motors:
   1. Electronically Commutated Motor:
      a. Motor Enclosure: Open drip proof.
      b. Motor to be a DC electronic commutation type motor (ECM) specially designed for fan application.
      c. Motors are permanently lubricated, heavy duty ball bearing type to match with the fanload and pre-wired to the specific voltage and phase.
      d. Internal motor circuitry to convert AC power supplied to the fan to DC power to operate the motor.
      e. Motor shall be speed controllable down to 20 percent of full speed (80 percent turndown). Speed shall be controlled by either apotentiometer dial mounted at the motor or by a 0-10 VDC signal.
      f. Motor shall be a minimum of 85 percent efficient at all speeds.

E. Drive Frame:
   1. Frames and panels shall be bolted construction.
   2. Drive fram assemblies and fan panels shall be galvanized steel or inted steel.
   3. Drive frame shall have formed channels and fan panels shall have pre-punched mounting holes, formed flanges, and a deep formed one-piece inlet venturi.

F. Options/Accessories:
   1. Damprs:
      a. Type: WD-320, Gravity.
      b. Prevents outside air from entering back into the building when fan is off.
      c. Balanced for minimal resistance to flow.
      d. Galvanized frames with pre-puched mounting holes.
   2. Discharge Diffusers:
      a. Constructed of heavy gauge galvanized steel frame and blades.
      b. Shall have pre-punch moutning flanges.
      c. Designed to mount to the interior end of the wall housing when used in supply configuration.
   3. Wall Housing:
      a. Fan panel will be mounted vertically drecting the air horizontally out of the building. Wall housing will be mounted in a manner that will not have any housing protruding outside the building. Motor and drives will be accessible from the interior of the building.
      b. Construct3ed of galvanized steel with heavy gauge mounting flanges and pre-punches mounting holds.
      c. Housing shall include OSHA approved motor guard.
      d. Reduces installation time and provides maximum installation flexibility.

4. Weather Hood:
   a. Shall shield wall opening and dampers from rain and snow.
   b. Material Type: Galvanized.
   c. Turndown Angle: 45 degrees.
   d. 1/2- by 1/2-inch weld wire birdscreen.

2.2 CENTRIFUGAL SQUARE INLINE FANS

A. Manufacturers:
   1. Greenheck Fan Corporation.
   2. Loren Cook Company.
   3. Substitutions: Refer to Section 23 05 00 "General Mechanical Requirements."

B. General Description:
   1. Base fan performance at standard conditions (density 0.075 pounds per cubed feet).
   2. Normal operating temperature up to 130 degrees F.
   3. Applications include intake, exhaust, return, or makeup air systems.
   4. Each fan shall bear a permanently affixed manufacturer's engraved mmetal nameplate containing the model number and individual serial number.

C. Fan Wheel:
   1. Backward inclined centrifugal type.
   2. Aluminum construction.
   3. Statically and dynamically balanced in accordance to AMCA Standard 204-05.
   4. The wheel cone and fan inlet will be matched and shall have precise running tolerances for maximum performance and operating efficiency.
   5. Single thickness blades are securely riveted or welded to a heavy gauge back plate and wheel cone.

D. Electronically Commutated Motor:
   1. Motor Enclosure: Open drip proof..
   2. Motor to be a DC Electronic Commutation Type Motor (ECM) specifically designed for fan applications. AC induction type motors are not acceptable. Examples of unacceptable motors are Shaded Pole, Permanent Split Capacitor (PSC), Split Phase, Capacitor Start, and 3-phase induction type motors.
   3. Motors are permanently lubricated, heavy duty ball bearing type to match with fan load and pre-wired to the specific voltage and phase.
   4. Internal motor circuitry to convert AC power supplied to the fan to DC power to operate the motor.
   5. Motor shall be speed controllable down to 20 percent of full speed (80 percent turndown). Speed shall be controlled by either a potentiometer dial mounted at the motor or by a 1-10 VDC signal.
   6. Motor shall be a minimum of 85 percent efficient at all speeds.

E. Housing/Cabinet Construction:
   1. Square design constructed of heavy gauge galvanized steel and shall include square duct mounting collars.
   2. Housing and bearing supports shall be constructed of heavy gauge bolted and welded steel construction to prevent vibration and to rigidly support the shaft and bearing assembly.
   3. Galvanized construction material

F. Housing Supports and Drive Frame:
   1. Housing supports are constructed of structural steel with formed flanges.
   2. Drive frame is welded steel which supports the motor.

G. Disconnect Switches:
   1. NEMA Rated: NEMA 1: Indoor application no water. Factory standard.
   2. Positive electrical shut-off.
   3. Wired from fan motor to junction box.

H. Duct Collars:
   1. Square design to provide a large discharge area.
   2. Inlet and discharge collars provide easy duct conection.

I. Access Panel: Two-sided access panels, permit easy access to all internal components.

PART 3 - EXECUTION

3.1 EXAMINATION

A. Verify roof curbs are installed and dimensions are as instructed by manufacturer.

3.2 INSTALLATION

A. Secure roof fans with cadmium plated steel lag screws to roof curb.
B. Install backdraft dampers on inlet to roof exhaust fans.
C. Install safety screen where inlet or outlet is exposed.
D. Provide sheaves required for final air balance.

3.3 DEMONSTRATION

A. Demonstrate fan operation and maintenance procedures.

3.4 PROTECTION OF FINISHED WORK

A. Do not operate fans for until ductwork is clean, filters in place, bearings lubricated, and fan has been test run under observation.

END OF SECTION

SECTION 23 37 00 - AIR OUTLETS AND INLETS

PART 1 - GENERAL

1.1 SUMMARY

A. Section Includes:
   1. Diffusers.
   2. Registers
   3. Grilles.
   4. Louvers.

B. Related Sections:
   1. Division 01 Specification Sections apply to Work of this Section.

1.2 REFERENCES

A. Air Movement and Control Association International, Inc.:
   1. AMCA 500 - Test Methods for Louvers, Dampers, and Shutters.

B. American Society of Heating, Refrigerating and Air-Conditioning Engineers:
   1. ASHRAE 70 - Method of Testing for Rating the Performance of Air Outlets and Inlets.

C. Sheet Metal and Air Conditioning Contractors:
   1. SMACNA - HVAC Duct Construction Standard - Metal and Flexible.

1.3 SUBMITTALS

A. Division 01 and Section 23 05 00 "General Mechanical Requirements" for Submittal Procedures.

B. Product Data: Submit sizes, finish, and type of mounting. Submit schedule of outlets and inlets showing type, size, location, application, and noise level.

C. Test Reports: Rating of air outlet and inlet performance.

D. Manufacturer's Certificate: Certify products meet or exceed specified requirements.

1.4 CLOSEOUT SUBMITTALS

A. Section 01 70 00 - Execution and Closeout Requirements: Closeout procedures.

B. Project Record Documents: Record actual locations of air outlets and inlets.

1.5 QUALITY ASSURANCE

A. Test and rate diffuser, register, and grille performance in accordance with ASHRAE 70.

B. Test and rate louver performance in accordance with AMCA 500.

1.6 QUALIFICATIONS

A. Manufacturer: Company specializing in manufacturing products specified in this section with minimum 3 years' documented experience.

1.7 WARRANTY

A. Section 01 70 00 "Execution and Closeout Requirements" for product warranties and product bonds.

PART 2 - PRODUCTS

2.1 DIFFUSERS, GRILLES, AND REGISTERS

A. Manufacturers:
1. Nailor.
2. Titus.
3. Price.
4. Substitutions: Section 23 05 00 "General Mechanical Requirements."

2.2 LOUVERS

A. Manufacturers:
1. Cesco Products.
2. Greenheck Fan Corporation.
3. Pottorff.
4. Ruskin Company.
5. Substitutions: Section 23 05 00 "General Mechanical Requirements."

PART 3 - EXECUTION

3.1 EXAMINATION

A. Verify inlet and outlet locations.
B. Verify ceiling or wall systems are ready for installation.

3.2 INSTALLATION

A. Install diffusers to ductwork with airtight connection.
B. Install balancing dampers on duct take-off to diffusers, grilles, and registers, whether or not dampers are furnished as part of diffuser, grille, and register assembly.
C. Paint visible portion of ductwork behind air outlets and inlets matte black.
D. Do not locate air registers, diffusers or grilles in floors of toilet or bathing rooms.

3.3 INTERFACE WITH OTHER PRODUCTS

A. Check location of outlets and inlets and make necessary adjustments in position to conform to architectural features, symmetry, and lighting arrangement.

3.4 SCHEDULES

A. Refer to Drawings for all schedules.

END OF SECTION

SECTION 23 81 26.20 - SPLIT-SYSTEM HEAT PUMPS

PART 1 - GENERAL

1.1 SUMMARY

A. Section Includes:
   1. Air handling unit.
   2. Condensing unit.

B. Related Sections:
   1. Division 01 Specification Sections apply to Work of this Section.
   2. Section 23 05 00 "General Maintenance Requirements."
   3. Division 26 Electrical.

1.2 REFERENCES

A. Air-Conditioning and Refrigeration Institute:
   1. ARI 210/240 - Unitary Air-Conditioning and Air-Source Heat Pump Equipment.
   2. ARI 270 - Sound Rating of Outdoor Unitary Equipment.
   3. ARI 340/360 - Commercial and Industrial Unitary Air-Conditioning and Heat Pump Equipment.

B. American Society of Heating, Refrigerating and Air-Conditioning Engineers:
   1. ASHRAE 52.1 - Gravimetric and Dust-Spot Procedures for Testing Air-Cleaning Devices Used in General Ventilation for Removing Particulate Matter.

C. National Fire Protection Association:
   1. NFPA 90A - Standard for the Installation of Air Conditioning and Ventilating Systems.

1.3 SUBMITTALS

A. Refer to Division 01 and Section 23 05 00 “General Mechanical Requirements” for submittals.

B. Product Data: Submit data indicating:
   1. Cooling and heating capacities.
   2. Dimensions.
   3. Weights.
   4. Rough-in connections and connection requirements.
   5. Duct connections.
   6. Electrical requirements with electrical characteristics and connection requirements.
   7. Controls.
   8. Accessories.

C. Manufacturer's Installation Instructions: Submit assembly, support details, connection requirements, and include start-up instructions.

D. Manufacturer's Certificate: Certify products meet or exceed specified requirements.

1.4 CLOSEOUT SUBMITTALS

A. Project Record Documents: Record actual locations of controls installed remotely from units.
B. Operation and Maintenance Data: Submit manufacturer's descriptive literature, operating instructions, installation instructions, and maintenance and repair data.

1.5 QUALITY ASSURANCE

A. Cooling Capacity: Rate in accordance with ARI 210/240.
B. Sound Rating: Measure in accordance with ARI 270.
C. Insulation and adhesives: Meet requirements of NFPA 90A.

1.6 QUALIFICATIONS

A. Manufacturer: Company specializing in manufacturing products specified in this Section with minimum 3 years' experience.
B. Installer: Company specializing in performing Work of this Section with minimum 3 years' experience.

1.7 DELIVERY, STORAGE, AND HANDLING

A. Accept units and components on site in factory protective containers, with factory shipping skids and lifting lugs. Inspect for damage.
B. Protect units from weather and construction traffic by storing in dry, roofed location.

1.8 WARRANTY

A. Furnish 5 year manufacturer's warranty for compressors.

PART 2 - PRODUCTS

2.1 MINI SPLIT SYSTEM AIR CONDITIONING UNITS

A. Manufacturers:
   1. Carrier Corp.
   2. Daikin.
   3. Mitsubishi Electric.
   4. L.G.
   5. Samsung.
   6. Substitutions: Refer to Section 23 05 00 "General Mechanical Requirements."
B. Wall-Mounted Indoor Unit:
   1. Indoor unit shall be factory assembled, wired, and run tested. Contained within the unit shall be all factory wiring, piping, control circuit board and fan motor. The unit shall have a self-diagnostic function, 3-minute time delay mechanism, an auto restart function, an emergency operation function, and a test run switch. Indoor unit and refrigerant pipes will be charged with dry air instead of refrigerant, before shipment from factory.

2. Unit Cabinet:
   a. Casing shall have a white finish.
   b. Multi-directional drain and refrigerant piping offering four directions for refrigerant piping and two directions for draining shall be standard.
   c. There shall be a separate back plate which secures the unit firmly to the wall.
3. Fan:
   a. Evaporator fan shall be an assembly with a line-flow fan directly driven by a single motor.
   b. Fan shall be statically and dynamically balanced and run on a motor with permanently lubricated bearings.
   c. A manual adjustable guide vane shall be provided with ability to change the airflow from side to side (left to right).
   d. A motorized air sweep flow louver shall provide an automatic change in airflow by directing the air up and down to provide for uniform air distribution.
   e. Indoor fan shall consist of three speeds: high, medium, and low.
4. Filter: Return air shall be filtered by means of an easily removable washable filter.
5. Coil:
   a. Evaporator coil shall be of nonferrous construction with smooth plate fins on copper tubing.
   b. Tubing shall have inner grooves for high efficiency heat exchange.
   c. All tube joints shall be brazed with phos copper or silver alloy.
   d. Coils shall be pressure tested at the factory.
   e. A condensate pan and drain shall be provided under the coil.
6. Electrical:
   a. Unit shall be powered from the outdoor unit.
   b. Indoor unit shall not have any supplemental electrical heat elements.
7. Control: Provide 7-day electronic programmable WIFI thermostat.
   a. This unit shall have a wireless controller to perform input functions necessary to operate the system.
   b. Controller shall consist of a power on/off switch, model selector, temperature setting, time control, fan speed select, and auto vane selector.
   c. Temperature changes shall be by 2 degrees F increments with a range of 59 to 89 degrees F.
   d. Microprocessor located in the indoor unit shall have the capability of sensing return air temperature and indoor coil temperature, receiving and processing commands from the wireless controller, providing emergency operation, and controlling the outdoor unit.
   e. System shall be capable of automatic restart when power is restored after power interruption.
   f. Control system shall control the continued operation of the air sweep louvers, as well as provide on/off and system/mode function switching.

C. Outdoor Unit:
1. Outdoor unit is designed specifically for use with the indoor units. The unit must have a powder coating finish. Outdoor unit shall be completely factory assembled, piped, and wired. Each unit must be run tested at the factory.
2. Unit Cabinet: casing shall be fabricated of galvanized steel, bonderized, and finished with a powder coating baked enamel. Provide with manufacturer's hail guard.

3. Fan:
   a. Unit shall be furnished with a direct drive propeller-type fan.
   b. Motor shall have inherent protection by permanently lubricated bearings.
   c. Fan motor shall be mounted for quiet operation.
   d. Fan shall be provided with a raised guard to prevent contact with moving parts.
   e. Outdoor unit shall have a horizontal discharge airflow.
4. Coil:
   a. Condenser coil shall be nonferrous construction with lanced or corrugated plate fins on copper tubing.
   b. Coil shall be protected with an integral metal guard.
   c. Refrigerant flow from the condenser shall be controlled by means of a metering orifice.
   d. Provide with either a factory installed or field installed hail screen.
5. Compressor:
   a. Compressor shall be a high-performance rotary.
   b. Outdoor unit shall have an accumulator.
   c. Compressor will be equipped with an in internal thermal overload.
   d. Outdoor unit must have the ability to operate with a maximum height difference of 25 feet and have refrigerant tubing length of 49 feet between indoor and outdoor units with the need for line size changes, traps, or additional oil.
   e. Compressor shall be mounted to avoid the transmission of vibration.
6. Electrical:
   a. Unit electrical power shall be as scheduled.
   b. Outdoor unit shall be controlled by the microprocessor located in the indoor unit.

2.2 ELECTRICAL CHARACTERISTICS AND COMPONENTS

A. Electrical Characteristics: In accordance with Division 26 Electrical.

PART 3 - EXECUTION

3.1 EXAMINATION

A. Verify piping rough-in is at correct location.
B. Verify electrical rough-in is at correct location.

3.2 INSTALLATION

A. Install refrigerant piping from unit to remote condensing unit. Install refrigerant specialties furnished with unit.
B. Pipe condensate from drain pan to condensate drainage system. Refer to Drawings.
C. Install accessories furnished loose for field mounting.
D. Install electrical devices furnished loose for field mounting.
E. Install control wiring between unit control panel and field mounted control devices.

3.3 CLEANING

A. After construction is completed, clean exposed surfaces of units.
B. Vacuum clean coils and inside of unit cabinet.
C. Touch-up marred or scratched surfaces of factory finished cabinets using finish materials furnished by manufacturer.

3.4 DEMONSTRATION

A. Demonstrate unit operation and maintenance.
B. Furnish services of manufacturer's technical representative for 2 hours to instruct Owner's personnel in operation and maintenance of units. Schedule training with Owner, provide at least 7 days notice of training date.

3.5 PROTECTION OF FINISHED WORK

A. Protect finished surfaces of cabinets with protective covers during remainder of construction.

END OF SECTION

SECTION 23 82 39 - UNIT HEATERS

PART 1 - GENERAL

1.1 SUMMARY

A. Section includes suspended heaters with electric-resistance heating coils.
B. Related Requirements:
   1. Division 01 Specification Sections apply to Work of this Section.

1.2 REFERENCES

A. American Society of Heating, Refrigerating and Air-Conditioning Engineers:
   1. ASHRAE 90.1 – Energy Standard for Buildings Except Low-Rise Residential Buildings.
   2. ASHRAE 33: Method of Testing Forced Circulation Air Cooling and Heating Coils.
B. National Fire Protection Association:
   1. NFPA 70: National Electrical Code.
   2. NFPA 90A: Standard for the Installation of Air Conditioning and Ventilating Systems.
   3. NFPA 90B: Standard for the Installation of Warm Air Heating and Air Conditioning Systems.
C. UL LLC:
   1. UL 823: Standard for Electric Heaters for Use in Hazardous (Classified) Locations.
   2. UL 1995: Heating and Cooling Equipment.
   3. UL 2021: Fixed and Location-Dedicated Electric Room Heaters.

1.3 SUBMITTALS

A. Division 01 and Section 23 05 00 "General Mechanical Requirements" for submittals.
B. Product Data: Submit manufacturer's literature and data indicating rated capacities, weights, accessories, electrical nameplate data, and wiring diagrams.
C. Manufacturer's Installation Instructions: Submit/indicate rigging and assembly.
D. Manufacturer's Certificate: Certify products meet or exceed specified requirements.

1.4 CLOSEOUT SUBMITTALS

A. Operation and Maintenance Data: Submit manufacturer's descriptive literature, operating instructions, maintenance and repair data, and parts listing.

1.5 QUALITY ASSURANCE

A. Perform Work in accordance with State and local standards.

1.6 QUALIFICATIONS

A. Manufacturer: Company specializing in manufacturing products specified in this Section with minimum 3 years' experience.
B. Installer: Company specializing in performing Work of this Section with minimum 3 years' experience.

1.7 DELIVERY, STORAGE, AND HANDLING

A. Accept heaters and controls on site in factory packaging. Inspect for damage.

1.8 FIELD MEASURMENTS

A. Verify field measurements prior to fabrication.

PART 2 - PRODUCTS

2.1 ELECTRIC RESISTANCE CEILING HEATERS

A. Manufacturers:
   1. Reznor.
   2. Markel.
   3. Substitutions: Refer to Section 23 05 00 "General Mechanical Requirements" for substitutions.
B. Self-contained, packaged, factory assembled, prewired unit consisting of cabinet, supply fan, heater exchanger, controls and accessories:
   1. Discharge Louvers: Flat ribbon wire, stamped-steel, or extruded aluminum grille.
   2. Control Voltage: 24 Volt, 60 Hertz.
   3. Location: Suspended mount.
   4. Heat ON indicator light.
C. Cabinet: Galvanized steel, corrosion resistant baked enamel finish, easily removed and secured access panels, insulated or double panel construction, constructed to fit into a ceiling.
D. Supply Fan: Propeller type with direct drive.
E. Heat Exchanger: Nickel-chromium-wire heating element enclosed in metallic sheath mechanically bonded into fins, or stainless steel tubular elements with aluminum fins, with automatic, integrated high-temperature cutout and overheat reset sensor. Element supports shall eliminate thermal expansion noise.
F. Controls:
   1. Thermostat integral to heater.
G. Motor Type: Permanently lubricated, totally enclosed, thermally protected, continuous duty.

PART 3 - EXECUTION

3.1 EXAMINATION

A. Examine areas to receive unit heaters for compliance with requirements for installation tolerances and other conditions affecting performance.

3.2 INSTALLATION

A. Install units in accordance with NFPA 90B and NFPA 70.
B. Provide hangers and supports for suspended units. Refer Section 23 05 29 "Hangers and Supports for HVAC Piping and Equipment."
C. Provide operating controls.
D. Provide connection to electrical power systems. Refer to Division 26.

END OF SECTION

SECTION 26 05 00 - BASIC ELECTRICAL METHODS

PART 1 - GENERAL

1.1 SUMMARY

A. Related Requirements:
   1. Division 01 Specification Sections apply to Work of this Section.

1.2 REQUIREMENTS OF REGULATORY AGENCIES AND STANDARDS

A. Regulatory Agencies: Installation, materials, equipment and Workmanship shall conform to the applicable provisions of the following:
B. National Electrical Code (NEC).
C. National Electrical Safety Code (NESC).
D. Terms and conditions of the electrical utility and other authorities having lawful jurisdiction pertaining to the Work required.
E. All temperature control wiring and associated conduit and boxes, shall be provided under other Sections of the Specifications. All power and control wiring, not identified under Divisions 22 and 23, shall be provided under Division 26.
F. The Work covered by Division 26 of the Specifications includes the furnishing of all materials, labor, transportation, tools, permits, and fees for the complete installation of all electrical Work required in the Contract Drawings.
G. In the event that additional or special construction is required, Contractor is responsible for providing all material and equipment which are usually furnished with such construction in order to complete the installation, whether indicated or not.
H. Contractor shall familiarize himself with the existing conditions of the Site and advise Engineer of any discrepancy or conflict prior to bidding.
I. Contractor shall be responsible for all permits, fees, and licenses required for the Project. All cost of such permits or fees shall be included in the bid.
J. All equipment and material shall be installed in accordance with applicable manufacturer's recommendations and standards.
K. Install sleeves, sealant pans, and roof penetrations as required for the installation of the electrical Work. All such Work is subject to the approval of Engineer.
L. Contractor shall be responsible for coordinating with the utility service provider to verify all locations, routing, equipment and labor that will be furnished as a part of this Contract.
M. Any fees or charges associated with delivering permanent power for the Project shall be included in Contractor's bid.

1.3 SUBMITTALS

A. The intent of this Section is to give general submittal information; refer to specific submittal information in the subsequent Mechanical Sections.

B. Within 10 days after award of the Contract, and before orders are placed, Contractor shall submit specific information on list of equipment and principal materials specified. Contractor shall indicate and/or provide names of manufacturers, catalog and model numbers, cut sheets, and such other supplementary information as necessary for evaluation. Minimum of six copies, or as directed by Engineer, of each shall be submitted and shall include all items mentioned by model number and/or manufacturer's name in the Specifications or in schedules on the Drawings.

C. Requirements for Each Submittal:
   1. Bear a dated stamp or specific written indication that Contractor has reviewed and approved all submittal prior to submission to Engineer.
   2. Have all information deleted by Contractor that pertains to the means and methods of construction or to fabrication, assembly, installation, or erection (approval by Engineer shall not extend to these areas unless specifically noted by Engineer).
   3. Be clearly and SPECIFICALLY marked as to which specific piece of equipment is being submitted, by use of a permanent marker, stamp, etc., so as to distinguish it from other pieces of equipment that may occur on the same page.
   4. Be clearly marked as to which available options are being submitted that are associated with a piece of equipment.
   5. Be complete with respect to quantities, dimensions, specific performance, materials, and similar data to enable Engineer to review the proposed equipment.

D. Omission by Contractor of any of the above requirements or submittals will subject submittal to automatic rejection without review.

E. Any submittals received by Engineer that were not requested shall be returned without review of any kind.

PART 2 - PRODUCTS

2.1 EQUIPMENT REQUIREMENTS

A. The electrical requirements for equipment specified or indicated on the Drawings are based on information available at the time of design. If equipment furnished for installation has electrical requirements other than indicated on the Electrical Drawings, Contractor shall make any required changes to wire and conduit size, controls, overcurrent protection, and installation as required to accommodate the equipment supplied, without additional charge to Owner. The complete responsibility and costs for such adjustments shall be assigned to the respective Section of this Specification under which the equipment is furnished.

2.2 MATERIALS

A. All similar materials and equipment shall be the product of the same manufacturer unless specified otherwise.

B. Materials and equipment shall be the standard products of manufacturers regularly engaged in the production of such material and shall be the manufacturer's current and standard design.

C. Altitude: Equipment affected by altitude shall perform satisfactorily for the function intended at the altitude of the Project Site.

D. Detectable Warning Tape: Acid and alkali-resistant polyethylene film warning tape manufactured for marking and identifying underground utilities, minimum 6-inch-wide and 4 mils thick, continuously inscribed with a description of utility, with metallic core encased in a protective jacket for corrosion protection, detectable by metal detector when tape is buried up to 30 inch deep; colored as follows:
   1. Red: Electric.
   2. Yellow: Gas, oil, steam, and dangerous materials.
   3. Orange: Telephone and other communications.
   4. Blue: Water systems.
   5. Green: Sewer systems.

E. Backfill Material:
   1. Material 4 inches below and 12 inches above pipes and conduit shall be natural or manufactured sand complying to ASTM C33.
   2. Material more than 12 inches above pipes and conduits shall be sand indicated above or native fill free of rock or gravel larger than 3/8-inches in any dimension, debris, waste, frozen materials, vegetation, and other deleterious matter.

PART 3 - EXECUTION

3.1 GENERAL

A. Fabrication, erection, and installation of the complete electrical system shall be done in accordance with accepted good practice by qualified personnel experienced in such Work and shall proceed in an orderly manner so as not to impede the progress of the Project. Electrical Contractor shall check all areas and surfaces where electrical equipment material is to be installed, removed, or relocated and report any unsatisfactory conditions before starting Work. Commencement of Work signifies this Contractor's acceptance of existing conditions. In the acceptance or rejection of the finished installation, no allowance will be made for lack of skill on the part of Workers. Surfaces requiring coatings will be completed prior to installation of any electrical Work on these surfaces.

B. The Electrical Drawings are diagrammatic. The installation requirements shall be carefully coordinated with structural, architectural, and mechanical conditions and shall be adjusted to avoid conflict.

C. All Work shall be concealed in walls, ceilings, and chases unless specifically noted to be exposed or otherwise approved.

D. The locations of electrical equipment are approximate and are not intended to convey the exact details and mounting of location of outlets, equipment, and other items. Exact locations are to be field determined by actual measurements.

E. The location height and projection of fixtures illuminating signs or special features shall be approved by Engineer prior to installation.

F. Contractor shall coordinate the location of all exterior fixtures with architectural Drawings and Specifications.

G. Consult architectural Drawings to determine wall finishes and locations of wall-mounted equipment, countertop splashes, and similar items to avoid conflict with electrical equipment. At locations where surface or pendant mounted light fixtures are noted, provide for all necessary framing channels, pendants, chains, canopies, and other hardware as required for a complete and operable system.

H. Protect subgrades and foundation soils against freezing temperatures or frost. Provide protective insulating materials as necessary.

I. Excavation for Pipe and Conduit:
   1. Excavate trenches to indicated gradients, lines, depths, and elevations.
   2. Excavate trenches to uniform widths to provide a Working clearance on each side of pipe or conduit. Excavate trench walls vertically from trench bottom to 12 inches higher than top of pipe or conduit, unless otherwise indicated.
   3. Trench Bottoms: Excavate and shape trench bottoms to provide uniform bearing and support of pipes and conduit. Shape subgrade to provide continuous support for bells, joints, and barrels of pipes and for joints, fittings, and bodies of conduits. Remove projecting stones and sharp objects along trench subgrade.
      a. For pipes and conduit less than 6 inches in nominal diameter and flat-bottomed, multiple-duct conduit units, hand excavate trench bottoms and support pipe and conduit on an undisturbed subgrade.
      b. For pipes and conduit 6 inches or larger in nominal diameter, shape bottom of trench to support bottom 90 degrees of pipe circumference. Fill depressions with tamped sand backfill.
      c. Excavate trenches 4 inches deeper than elevation required in rock or other unyielding bearing material to allow for bedding course.
   4. Place backfill and fill materials in layers not more than 8 inches in loose depth for material compacted by heavy compaction equipment, and not more than 4 inches in loose depth for material compacted by hand-operated tampers.
   5. Compact soil to not less than the following percentages of maximum dry unit weight according to ASTM D698:
      a. Under structures, building slabs, steps, and pavements, scarify and recompact top 12 inches of existing subgrade and each layer of backfill or fill material at 95 percent.
      b. Under walkways, scarify and recompact top 6 inches below subgrade and compact each layer of backfill or fill material at 92 percent.
      c. Under lawn or unpaved areas, scarify and recompact top 6 inches below subgrade and compact each layer of backfill or fill material at 85 percent.
   6. Install detectable warning tape above conduits and pipe, 12 inches below finished grade, except 6 inches below subgrade under pavements and slabs.
   7. Protection:
      a. Protecting Graded Areas: Protect newly graded areas from traffic, freezing, and erosion. Keep free of trash and debris.
      b. Repair and reestablish grades to specified tolerances where completed or partially completed surfaces become eroded, rutted, settled, or where they lose compaction due to subsequent construction operations or weather conditions.
         1) Scarify or remove and replace soil material to depth as directed by Engineer; reshape and recompact.
      c. Where settling occurs before Project correction period elapses, remove finished surfacing, backfill with additional soil material, compact, and reconstruct surfacing.
         1) Restore appearance, quality, and condition of finished surfacing to match adjacent Work, and eliminate evidence of restoration to the greatest extent possible.

8. Disposal of Surplus and Waste Materials:
   a. Disposal: Remove surplus satisfactory soil and waste material, including unsatisfactory soil, trash, and debris, and legally dispose of it off Owner's property unless otherwise directed by Owner.
   b. Repair: Any damage to shrubs, grass or structures shall be repaired to previous condition by Contractor at no additional expense to Owner.

J. It shall be the responsibility of Division 26 Contractor to provide for all disconnecting and motor control devices for all equipment. Contractor shall coordinate to determine voltage, phase, and configurations. Any changes necessary to coordinate these items between Divisions 22, 23, and 26 shall be considered part of this Contract.

K. Division 26 Contractor shall be responsible for providing for all power requirements associated with the mechanical systems including power, control devices, smoke dampers, etc. Refer to Division 22 and 23 Drawings for locations and requirements. Connect all smoke dampers to the fire alarm control panel.

3.2 PERFORMANCE TESTS

A. Thoroughly test all control circuits, fixtures, services, and all circuits for proper operating condition and freedom from grounds and short circuits before acceptance is requested. All equipment, appliances, and devices shall be operated under load conditions.

B. After the interior wiring system installation is complete conduct operating tests for approval. When requested, test all the wire, cable, devices, and equipment after installation, to assure that all material continues to possess all the original characteristics as required by governing codes and standards listed in these Specifications.

C. After motor operation has been verified make voltage readings at all panelboards and starters. Based on these readings, make final adjustments of primary taps on all transformers in the building as directed, or coordinate with the utility proper building voltage.

D. Perform such other tests as required by other Sections of these Specifications or as requested to prove acceptability.

E. Furnish all instruments and labor for testing.

F. All material installed shall be listed, inspected, and approved by a nationally accepted testing laboratory such as UL and/or ETL. All material shall bear the UL or ETL label where available.

3.3 SUBMITTAL AND APPROVAL OF MATERIALS

A. All requirements for submittals shall comply with the applicable provisions included in the individual Specification Sections.

B. Unless identified as a sole source item, the listing of product manufacturers, catalog numbers, etc., on Drawings is intended to establish a standard of quality of the product. It is the responsibility of Contractor to review all items he intends to submit. If equipment other than that indicated on Drawings is proposed by Contractor, the information will be reviewed at the time of the submission of the submittal.

END OF SECTION

SECTION 26 05 13 - BUILDING WIRE AND CABLE

PART 1 - GENERAL

1.1 SUMMARY

A. Section Includes:
   1. Building wire and cable.
   2. Wiring connectors and connections.

B. Related Requirements:
   1. Division 01 Specification Sections apply to Work of this Section.
   2. Section 01 40 00 "Quality Requirements" for requirements for references and standards.
   3. Section 26 05 53 "Electrical Identification."

1.2 REFERENCES

A. NECA Standard of Installation (National Electrical Contractors Association).
B. NETA ATS - Acceptance Testing Specifications for Electrical Power Distribution Equipment and Systems (International Electrical Testing Association).
C. NFPA 70 - National Electrical Code.

1.3 SUBMITTALS FOR REVIEW

A. Refer to Section 01 33 00 "Submittal Procedures" for procedures for Submittals.
B. Product Data: Provide for each cable assembly type.

1.4 SUBMITTALS FOR INFORMATION

A. Refer to Section 01 33 00 "Submittal Procedures" for procedures for Submittals.
B. Test Reports: Indicate procedures and values obtained.
C. Manufacturer's Installation Instructions: Indicate application conditions and limitations of use stipulated by product testing agency specified under Regulatory Requirements.

1.5 SUBMITTALS AT PROJECT CLOSEOUT

A. Refer to Section 01 70 00 "Execution and Closeout Requirements" for procedures for submittals.
B. Project Record Documents: Record actual locations of components and circuits.

1.6 QUALIFICATIONS

A. Manufacturer: Company specializing in manufacturing products specified in this Section with minimum 3 years' documented experience.

1.7 REGULATORY REQUIREMENTS

A. Conform to NFPA 70.
B. Furnish products listed and classified by UL as suitable for the purpose specified and indicated.

1.8 FIELD SAMPLES

A. Provide under provisions of Section 01 40 00 "Quality Requirements."

1.9 PROJECT CONDITIONS

A. Refer to Section 01 30 00 "Administrative Requirements."
B. Verify that field measurements are as indicated.
C. Conductor sizes are based on copper.
D. Wire and cable routing indicated is approximate unless dimensioned.

1.10 COORDINATION

A. Coordinate Work under provisions of Section 01 30 00 "Administrative Requirements."
B. Where wire and cable destination is indicated and routing is not shown, determine exact routing and lengths required.

PART 2 - PRODUCTS

2.1 BUILDING WIRE

A. Manufacturers:
   1. American Cable.
   2. Houston Wire and Cable.
   3. Southwire.
   4. Substitutions: Refer to Section 01 60 00 "Product Requirements."
B. Description: Single conductor insulated wire.
C. Conductor: Copper.
D. Insulation Voltage Rating: 600 volts.
E. Insulation: NFPA 70, Type indicated herein.
F. MC Cable: Shall not be utilized on this Project.

2.2 WIRING CONNECTORS

A. Split Bolt Connectors:
   1. Buchanan.
   2. Burndy.
   3. Ilsco.
   4. Substitutions: Refer to Section 01 60 00 "Product Requirements."

B. Solderless Pressure Connectors:
   1. Buchanan.
   2. Burndy.
   3. Ilsco.
   4. Substitutions: Refer to Section 01 60 00 "Product Requirements."
C. Spring Wire Connectors:
   1. Ideal.
   2. Substitutions: Refer to Section 01 60 00 "Product Requirements."
D. Compression Connectors:
   1. Buchanan.
   2. Burndy.
   3. Ilsco.
   4. Substitutions: Refer to Section 01 60 00 "Product Requirements."

PART 3 - EXECUTION

3.1 EXAMINATION

A. Refer to Section 01 30 00 "Administrative Requirements" for verification of existing conditions before starting Work.
B. Verify that interior of building has been protected from weather.
C. Verify that mechanical Work likely to damage wire and cable has been completed.
D. Verify that raceway installation is complete and supported.

3.2 PREPARATION

A. Completely and thoroughly swab raceway before installing wire.

3.3 WIRING METHODS

A. Concealed Dry Interior Locations: Use only building wire, Type THHN/THWN insulation, in raceway.
B. Exposed Dry Interior Locations: Use only building wire, Type THHN/THWN insulation, in raceway.
C. Above Accessible Ceilings: Use only building wire, Type THHN/THWN insulation, in raceway.
D. Wet or Damp Interior Locations: Use only building wire, Type THHN/THWN insulation, in raceway.
E. Exterior Locations: Use only building wire, Type THHN/THWN insulation, in raceway.
F. Use wiring methods indicated.

3.4 INSTALLATION

A. Refer to Section 01 40 00 "Quality Requirements" for manufacturer's instructions.
B. Route wire and cable as required to meet Project Conditions.
C. Install cable in accordance with the NECA "Standard of Installation."
D. Use solid conductor for feeders and branch circuits 10 AWG and smaller.

E. Use stranded conductors for control circuits.
F. Use conductor not smaller than 12 AWG for power and lighting circuits with the exception of premanufactured fixture whips, listed for such use and not exceeding 6 feet in length.
G. Use conductor not smaller than 14 AWG for control circuits.
H. Use 10 AWG conductors for 20 ampere, 120 volt branch circuits longer than 100 feet and as indicated on the Drawings.
I. Install all conductors in conduit.
J. Pull all conductors into raceway at same time.
K. Use suitable wire pulling lubricant for building wire 4 AWG and larger.
L. Protect exposed cable from damage.
M. All cables shall be neatly supported.
N. Use suitable cable fittings and connectors.
O. Neatly train and lace wiring inside boxes, equipment, and panelboards.
P. Clean conductor surfaces before installing lugs and connectors.
Q. Make splices, taps, and terminations to carry full ampacity of conductors with no perceptible temperature rise.
R. Use split bolt connectors for copper conductor splices and taps, 6 AWG and larger. Tape uninsulated conductors and connector with electrical tape to 150 percent of insulation rating of conductor.
S. Use solderless pressure connectors with insulating covers for copper conductor splices and taps, 8 AWG and smaller.
T. Use insulated spring wire connectors with plastic caps for copper conductor splices and taps, 10 AWG and smaller.
U. Identify and color code wire and cable under provisions of Section 26 05 53 "Electrical Identification." Identify each conductor with its circuit number or other designation indicated.
V. The number of conductors in each conduit run shall be limited to the requirements as indicated on the Drawings and indicated in Article 310 of the National Electrical Code.

3.5 FIELD QUALITY CONTROL

A. Refer to Section 01 40 00 "Quality Requirements" for field inspection, testing, and adjusting.
B. Inspect and test in accordance with NETA ATS, except Section 4.
C. Perform inspections and tests listed in NETA ATS, Section 7.3.1.

END OF SECTION

SECTION 26 05 19 - EQUIPMENT WIRING SYSTEMS

PART 1 - GENERAL

1.1 SUMMARY

A. Section includes basic electrical connections to equipment specified under other Sections.
B. Related Requirements:
   1. Division 01 Specification Sections apply to Work of this Section.
   2. Section 26 05 00 "Basic Electrical Methods."

1.2 REFERENCES

A. NEMA WD 1 - General Purpose Wiring Devices.
B. NEMA WD 6 - Wiring Device Configurations.
C. ANSI/NFPA 70 - National Electrical Code.

1.3 SUBMITTALS

A. Submit under provisions of Section 01 33 00 "Submittal Procedures."
B. Product Data: Provide wiring device manufacturer's catalog information showing dimensions, configurations, and construction.
C. Manufacturer's Instructions: Indicate application conditions and limitations of use stipulated by product testing agency specified under Regulatory Requirements. Include instructions for storage, handling, protection, examination, preparation, installation, and starting of product.

1.4 REGULATORY REQUIREMENTS

A. Conform to requirements of ANSI/NFPA 70.
B. Furnish products listed and classified by UL as suitable for purpose specified and shown.

1.5 COORDINATION

A. Coordinate Work under provisions of Section 01 30 00 "Submittal Procedures."
B. Obtain and review Shop Drawings, product data, and manufacturer's instructions for equipment furnished under other Sections.
C. Determine connection locations and requirements.
D. Sequence rough-in of electrical connections to coordinate with installation schedule for equipment.
E. Sequence electrical connections to coordinate with startup schedule for equipment.

PART 2 - PRODUCTS

2.1 CORDS AND CAPS

A. Attachment Plug Construction: Conform to NEMA WD 1.
B. Configuration: NEMA WD 6; match receptacle configuration at outlet provided for equipment.

C. Cord Construction: ANSI/NFPA 70, multiconductor flexible cord with identified equipment grounding conductor, suitable for use in damp locations.
D. Size: Suitable for connected load of equipment, length of cord, and rating of branch circuit overcurrent protection.
E. Division 26 Contractor shall be responsible for providing matching cord/receptacle for all equipment not furnished with such equipment.

PART 3 - EXECUTION

3.1 EXAMINATION

A. Verify conditions under provisions of Section 01 30 00 "Submittal Procedures."
B. Verify that equipment is ready for electrical connection, wiring, and energization.

3.2 ELECTRICAL CONNECTIONS

A. Make electrical connections in accordance with equipment manufacturer's instructions.
B. Make conduit connections to equipment using flexible conduit. Use liquidtight flexible conduit with watertight connectors in damp or wet locations.
C. Make wiring connections using wire and cable with insulation suitable for temperatures encountered in heat producing equipment.
D. Provide receptacle outlet where connection with attachment plug is indicated. Provide cord and cap where field-supplied attachment plug is indicated.
E. Provide suitable strain-relief clamps and fittings for cord connections at outlet boxes and equipment connection boxes.
F. Install disconnect switches, controllers, control stations, and control devices as indicated.
G. Modify equipment control wiring with terminal block jumpers as indicated.
H. Provide interconnecting conduit and wiring between devices and equipment where indicated.
I. Check and modify phase connections as required for proper motor rotation.
J. Provide power to equipment only after equipment supplier verifies acceptance to receive and approves.
K. Contractor shall coordinate with all equipment to verify exact power and control wiring as required to properly serve equipment.

END OF SECTION

SECTION 26 05 26 - GROUNDING AND BONDING

PART 1 - GENERAL

1.1 SUMMARY

A. Section Includes:
   1. Rod electrodes.
   2. Mechanical connectors.
   3. Exothermic connections.
   4. Wire.

B. Related Requirements:
   1. Division 01 Specification Sections apply to Work of this Section.
   2. Section 01 40 00 "Quality Requirements" for requirements for references and standards.

1.2 REFERENCES

A. NETA ATS - Acceptance Testing Specifications for Electrical Power Distribution Equipment and Systems (International Electrical Testing Association).

B. NFPA 70 - National Electrical Code.

1.3 GROUNDING SYSTEM DESCRIPTION

A. Metal underground water pipe.

B. Metal frame of the building.

C. Rod electrodes.

1.4 PERFORMANCE REQUIREMENTS

A. Grounding System Maximum Resistance: 10 ohms.

1.5 SUBMITTALS FOR REVIEW

A. Refer to Section 01 33 00 "Submittal Procedures."

B. Product Data: Provide for grounding electrodes and connections.

1.6 SUBMITTALS FOR CLOSEOUT

A. Refer to Section 01 70 00 "Execution and Closeout Requirements" for procedures for Submittals.

B. Project Record Documents: Record actual locations of components and grounding electrodes.

C. Certificate of Compliance: Indicate approval of installation by authority having jurisdiction.

1.7 QUALIFICATIONS

A. Manufacturer: Company specializing in manufacturing products specified in this Section with minimum 3 years' documented experience, and with service facilities within 100 miles of Project.

1.8 REGULATORY REQUIREMENTS

A. Conform to requirements of NFPA 70.
B. Products: Listed and classified by UL as suitable for the purpose specified and indicated.

PART 2 - PRODUCTS

2.1 ROD ELECTRODES

A. Material: Copper.
B. Diameter: 3/4-inch.
C. Length: 10 feet.

2.2 MECHANICAL CONNECTORS

A. Description: In lieu of exothermic connections, high compression type as manufactured by Burndy using the 12 ton Hy-Ground series.

2.3 EXOTHERMIC CONNECTIONS

A. Manufacturers: Cadweld.

2.4 WIRE

A. Material: Stranded copper.
B. Grounding Electrode Conductor: Minimum size to meet NFPA 70 requirements or as indicated on the Drawings.

PART 3 - EXECUTION

3.1 EXAMINATION

A. Refer to Section 01 30 00 "Administrative Requirements" for verification of existing conditions prior to beginning Work.
B. Verify that final backfill and compaction has been completed before driving rod electrodes.

3.2 INSTALLATION

A. Refer to Section 01 40 00 "Quality Requirements" for manufacturer's instructions.
B. Install rod electrodes. Install additional rod electrodes as required to achieve a resistance to ground of 10 ohms or less. Rods shall be installed with a minimum separation of 6 feet.
C. Provide bonding to meet Regulatory Requirements.

D. Bond together metal siding not attached to grounded structure; bond to ground.
E. Equipment Grounding Conductor: Provide separate, insulated conductor within each feeder and branch circuit raceway. Terminate each end on suitable lug, bus, or bushing.
F. Grounding Electrode System: The new grounding electrode system shall consist of the common bonding of building steel, underground steel water piping and supplemental ground rods, concrete re-enforcing bar, as detailed on the Drawings.
G. Provide proper bonding of the electrical system's grounded conductor (neutral) and the grounding electrode system sized in accordance with NEC Article 250. This bonding shall occur at all locations where there are separately derived systems.

3.3 FIELD QUALITY CONTROL

A. Refer to Section 01 40 00 "Quality Requirements" for field inspection, testing, and adjusting.
B. Inspect and test in accordance with NETA ATS, except Section 4.
C. Perform inspections and tests listed in NETA ATS, Section 7.13.

END OF SECTION

SECTION 26 05 29 - SUPPORTING DEVICES

PART 1 - GENERAL

1.1 SUMMARY

A. Section Includes:
   1. Supports for conduit and equipment.
   2. Anchors and fasteners.
B. Related Requirements:
   1. Division 01 Specification Sections apply to Work of this Section.

1.2 REFERENCES

A. NECA - National Electrical Contractors Association.
B. NFPA 70 - National Electrical Code.

1.3 REGULATORY REQUIREMENTS

A. Conform to requirements of NFPA 70.
B. Furnish products listed and classified by UL as suitable for purpose specified and shown.

PART 2 - PRODUCTS

2.1 SUPPORTS

A. Provide materials, sizes, and types of anchors, fasteners and supports to carry the loads of equipment and conduit. Consider weight of wire in conduit when selecting products.

2.2 ANCHORS AND FASTENERS

A. Concrete Structural Elements: Use expansion anchors, powder actuated anchors, and preset inserts.
B. Steel Structural Elements: Use beam clamps, spring steel clips, and steel ramset fasteners.
C. Concrete Surfaces: Use self-drilling anchors and expansion anchors.
D. Sheet Metal: Use sheet metal screws.
E. Wood Elements: Use wood screws.
F. Roof Support/Jacks: Advanced supports products # SS1000A or approved equal.

2.3 MATERIALS AND FINISHES

A. Provide adequate corrosion resistance.

PART 3 - EXECUTION

3.1 INSTALLATION

A. Install products in accordance with manufacturer's instructions.
B. Provide anchors, fasteners, and supports in accordance with NECA "Standard of Installation."
C. Do not fasten supports to pipes, ducts, mechanical equipment, and conduit.
D. Obtain permission from Engineer before drilling or cutting structural members.
E. Fabricate supports from structural steel as indicated on drawings. Rigidly weld members or use hexagon head bolts to present neat appearance with adequate strength and rigidity. Use lock washers under all nuts.
F. Install surface-mounted cabinets and panelboards with minimum of four anchors.
G. In wet and damp locations, use steel channel supports to stand cabinets and panelboards 1 inch off wall.
H. Install conduit supports a maximum spacing specified in the NEC.

END OF SECTION

SECTION 26 05 33 - CONDUIT

PART 1 - GENERAL

1.1 SUMMARY

A. Section Includes:
   1. Metal conduit.
   2. Flexible metal conduit.
   3. Liquidtight flexible metal conduit.
   4. Electrical metallic tubing.
   5. Fittings and conduit bodies.

B. Related Requirements:
   1. Division 01 Specification Sections apply to Work of this Section.
   2. Section 26 05 33.16 "Boxes."
   3. Section 26 05 53 "Electrical Identification."

1.2 REFERENCES

A. ANSI C80.1 - Rigid Steel Conduit, Zinc Coated.
B. ANSI C80.3 - Electrical Metallic Tubing, Zinc Coated.
C. ANSI/NEMA FB 1 - Fittings, Cast Metal Boxes, and Conduit Bodies for Conduit and Cable Assemblies.
D. NECA "Standard of Installation."
E. NEMA TC 3 - PVC Fittings for Use with Rigid PVC Conduit and Tubing.
F. NFPA 70 - National Electrical Code.

1.3 DESIGN REQUIREMENTS

A. Conduit Size: NFPA 70.

1.4 SUBMITTALS

A. Submit under provisions of Section 01 33 00 "Submittal Procedures."
B. Product Data: Provide for metallic conduit, flexible metal conduit, liquidtight flexible metal conduit, nonmetallic conduit, fittings and conduit bodies.

1.5 PROJECT RECORD DOCUMENTS

A. Submit under provisions of Section 01 70 00 "Execution and Closeout Requirements."
B. Accurately record actual routing of conduits.

1.6 REGULATORY REQUIREMENTS

A. Conform to requirements of ANSI/NFPA 70.
B. Furnish products listed and classified by UL as suitable for purpose specified and shown.

1.7 DELIVERY, STORAGE, AND HANDLING

A. Deliver, store, protect, and handle products to site under provisions of Section 01 60 00 "Product Requirements."
B. Accept conduit on site. Inspect for damage.
C. Protect conduit from corrosion and entrance of debris by storing above grade. Provide appropriate covering.
D. Protect PVC conduit from sunlight.

1.8 PROJECT CONDITIONS

A. Verify that field measurements are as shown on Drawings.
B. Verify routing and termination locations of conduit prior to rough-in.
C. Conduit routing is shown on Drawings in approximate locations unless dimensioned. Route as required to complete wiring system.

PART 2 - PRODUCTS

2.1 CONDUIT REQUIREMENTS

A. Minimum Size: 3/4-inch for all branch circuits located above ceiling. Contractor may use 1/2-inch conduit down the wall to receptacles and light switches.
B. Wet and Damp Locations above grade: Use rigid steel or liquid tight flexible conduit.
C. Dry Locations: Use electrical metallic tubing for concealed and exposed locations.
D. Below Slab: Non-metallic PVC conduit is acceptable within limitations specified.
E. Below Grade: Use only PVC coated rigid galvanized steel, wrapped rigid steel, or non-metallic PVC conduit within limitations specified.
F. MC Cable: Shall not be utilized on this Project.

2.2 METAL CONDUIT

A. Manufacturers:
   1. Allied.
   2. Wheatland.
   3. Substitutions: Under provisions of Section 01 60 00 "Product Requirements."
B. Rigid Steel Conduit: ANSI C80.1.
C. Fittings and Conduit Bodies: ANSI/NEMA FB 1; all steel fittings.

2.3 FLEXIBLE METAL CONDUIT

A. Manufacturers:
   1. Allied Tube.
   2. Electri-Flex.
   3. Greenfield.
   4. Substitutions: Under provisions of Section 01 60 00 "Product Requirements."
B. Description: Interlocked steel construction. Aluminum is not permitted.

C. Fittings: ANSI/NEMA FB 1 with fittings approved for steel flex.
D. Applications: Use for final connections to motorized equipment, connections to recessed lighting fixtures located in accessible ceilings, and connections to dry type transformers. Utilization of 3/8-inch in lieu of the minimum 1/2-inch is acceptable under the limitations of the National Electrical Code.

2.4 LIQUIDTIGHT FLEXIBLE METAL CONDUIT

A. Manufacturers:
   1. Electri-flex.
   2. Ultratite.
   3. Substitutions: Under provisions of Section 01 60 00 "Product Requirements."
B. Description: Interlocked steel construction with PVC jacket.
C. Fittings: ANSI/NEMA FB 1.
D. Applications: Use for final connections to motorized equipment in exterior locations and areas subjected to moisture (kitchen).

2.5 ELECTRICAL METALLIC TUBING (EMT)

A. Manufacturers:
   1. Allied.
   2. Substitutions: Under provisions of Section 01 60 00 "Product Requirements."
B. Description: ANSI C80.3; galvanized tubing.
C. Fittings and Conduit Bodies: ANSI/NEMA FB 1; all steel, compression or set screw.
D. Applications: Do not use below grade or in exterior locations. Use only in interior locations.

2.6 PVC COATED METAL CONDUIT

A. Manufacturers:
   1. Levy.
   2. Robroy Industries.
   3. Substitutions: Under provisions of Section 01 60 00 "Product Requirements."
B. Description: NEMA RN-1, rigid steel conduit with external PVC coating, 20 mil thick.
C. General: Protective layer may be factory applied or galvanized rigid steel conduit may be applied with two layers of corrosion resistant tape.
D. Fittings and Conduit Bodies: ANSI/NEMA FB 1; steel fittings with external PVC coatings to match conduit.

2.7 NON-METALLIC PVC CONDUIT

A. Manufacturers:
   1. Allied.
   2. Carlon.
   3. Substitutions: Under provisions of Section 01 60 00 "Product Requirements."
B. Description: NEMA TC2; Schedule 40 PVC. Flame retardant type resistant to bending and cracking.
C. Fittings and conduit bodies: NEMA TC3.
D. Vertical risers and ells installed below grade shall be rigid steel with wrapping.
E. Do not use above grade.

F. Joints made with PVC fittings shall be applied with solvent compound after thorough cleaning.
G. Refer to Part 3. Do not use PVC conduit for conduits passing vertically through the slab.

PART 3 - EXECUTION

3.1 INSTALLATION

A. Install conduit in accordance with NECA "Standard of Installation."
B. Install nonmetallic conduit in accordance with manufacturer's instructions.
C. Arrange supports to prevent misalignment during wiring installation.
D. Support conduit using coated steel or malleable iron straps, lay-in adjustable hangers, clevis hangers, and split hangers.
E. Group related conduits; support using conduit rack. Construct rack using steel channel.
F. Fasten conduit supports to building structure and surfaces under provisions of Section 26 05 29 "Supporting Devices."
G. Do not support conduit with wire or perforated pipe straps. Remove wire used for temporary supports.
H. Do not attach conduit to ceiling support wires.
I. Arrange conduit to maintain headroom and present neat appearance.
J. Route exposed conduit parallel and perpendicular to walls.
K. Route conduit installed above accessible ceilings parallel and perpendicular to walls.
L. Maintain adequate clearance between conduit and piping.
M. Maintain 12-inch clearance between conduit and surfaces with temperatures exceeding 104 degrees F.
N. Cut conduit square using saw or pipecutter; de-burr cut ends.
O. Bring conduit to shoulder of fittings; fasten securely.
P. Use conduit hubs or sealing locknuts to fasten conduit to sheet metal boxes in damp and wet locations and to cast boxes.
Q. Install no more than equivalent of three 90-degree bends between boxes. Use conduit bodies to make sharp changes in direction, as around beams. Use factory elbows for bends in metal conduit larger than 2-inch size.
R. Avoid moisture traps; provide junction box with drain fitting at low points in conduit system.
S. Provide suitable fittings to accommodate expansion and deflection where conduit crosses control and expansion joints.
T. Provide suitable pull string in each empty conduit except sleeves and nipples.
U. Use suitable caps to protect installed conduit against entrance of dirt and moisture.
V. Ground and bond conduit under provisions of Section 26 05 26 "Grounding and Bonding."
W. Identify conduit under provisions of Section 26 05 53 "Electrical Identification."
X. Ducts shall be cleaned with a flexible mandrel assembly.
Y. All conduits passing vertically through slabs or through earth on grade shall be PVC-coated, rigid steel. Rigid steel conduits shall be applied with protective coatings as indicated herein. All transitions from PVC to rigid steel shall occur below the slab.
Z. Underground branch circuit extensions to parking lot lighting fixtures and other branch circuits may be direct buried PVC conduit. Service entrance PVC conduit shall be concrete encased in accordance with the Drawings unless otherwise approved by Primary Designer.

AA. Minimum cover for underground conduits shall be 24 inches unless otherwise noted.
BB. All conduit shall be routed concealed as much as possible including conduit serving roof-mounted equipment. Roof penetrations for conduits shall adhere to the requirements and details as indicated on the Architectural Drawings.

3.2 INTERFACE WITH OTHER PRODUCTS

A. Install conduit to preserve fire resistance rating of partitions and other elements, using materials and methods under the provisions of Section 07 84 13 "Penetration Firestopping."
B. Route conduit through roof openings for piping and ductwork or through suitable roof jack with pitch pocket. Coordinate location with roofing installation.

END OF SECTION

SECTION 26 05 33.16 - BOXES

PART 1 - GENERAL

1.1 SUMMARY

A. Section Includes:
   1. Wall and ceiling outlet boxes.
   2. Pull and junction boxes.
B. Related Requirements:
   1. Division 01 Specification Sections apply to Work of this Section.
   2. Section 07 84 13 "Penetration Firestopping."
   3. Section 26 27 26 "Wiring Devices" for wall plates in finished areas.

1.2 REFERENCES

A. NECA - Standard of Installation.
B. NEMA FB 1 - Fittings and Supports for Conduit and Cable Assemblies.
C. NEMA OS 1 - Sheet-Steel Outlet Boxes, Device Boxes, Covers, and Box Supports.
D. NEMA 250 - Enclosures for Electrical Equipment (1,000 Volts Maximum).
E. NFPA 70 - National Electrical Code.

1.3 SUBMITTALS FOR CLOSEOUT

A. Refer to Section 01 70 00 "Execution and Closeout Requirements" for Submittals for Project closeout.
B. Record actual locations and mounting heights of outlet, pull, and junction boxes on Project record documents.

1.4 REGULATORY REQUIREMENTS

A. Conform to requirements of NFPA 70.
B. Provide Products listed and classified by UL as suitable for the purpose specified and indicated.

PART 2 - PRODUCTS

2.1 WALL AND CEILING OUTLET BOXES

A. Sheet Metal Outlet Boxes: NEMA OS 1, galvanized steel.
B. Luminaire and Equipment Supporting Boxes: Rated for weight of equipment supported; include 1/2-inch male fixture studs where required.
C. Cast Boxes: NEMA FB 1, Type FD, cast feralloy. Provide gasketed cover by box manufacturer.
D. Wall Plates for Finished Areas: As specified in Section 26 27 26 "Wiring Devices."

2.2 PULL AND JUNCTION BOXES

A. Sheet Metal Boxes: NEMA OS 1, galvanized steel.
B. Surface Mounted Cast Metal Box: NEMA 250, Type 4; flat-flanged, surface mounted junction box.
C. Material: Galvanized cast iron.
D. Cover: Furnish with ground flange, neoprene gasket, and stainless-steel cover screws.
E. Fiberglass boxes are allowed in landscaping areas. Equipment shall be pedestrian rated.

PART 3 - EXECUTION

3.1 EXAMINATION

A. Verify locations of outlets in all locations areas prior to rough-in.

3.2 INSTALLATION

A. Install boxes in accordance with NECA "Standard of Installation."
B. Install in locations as shown on Drawings, and as required for splices, taps, wire pulling, equipment connections and compliance with regulatory requirements.
C. Set wall mounted boxes at elevations to accommodate mounting heights specified in Section for outlet device.
D. Electrical boxes are shown on Drawings in approximate locations unless dimensioned. Adjust box location up to 10 feet if required to accommodate intended purpose.
E. Orient boxes to accommodate wiring devices oriented as specified in Section 26 27 26 "Wiring Devices."
F. Maintain headroom and present neat mechanical appearance.
G. Install pull boxes and junction boxes above accessible ceilings and in unfinished areas only.
H. Inaccessible Ceiling Areas: Install outlet and junction boxes no more than 6 inches from ceiling access panel or from removable recessed luminaire.
I. Install boxes to preserve fire resistance rating of partitions and other elements, using materials and methods specified in Section 07 84 13 "Penetration Firestopping."
J. Coordinate mounting heights and locations of outlets mounted above counters, benches, and backsplashes with Architectural Drawings and other trades.
K. Locate outlet boxes to allow luminaires positioned as shown on reflected ceiling plan.
L. Align adjacent wall mounted outlet boxes for switches, thermostats, and similar devices.
M. Use flush mounting outlet box in finished areas.
N. Locate flush mounting box in masonry wall to require cutting of masonry unit corner only. Coordinate masonry cutting to achieve neat opening.
O. Do not install flush mounting box back-to-back in walls; provide minimum 6-inch separation. Provide minimum 24-inch separation in acoustic rated walls.
P. Secure flush mounting box to interior wall and partition studs. Accurately position to allow for surface finish thickness.
Q. Use stamped steel bridges to fasten flush mounting outlet box between studs.
R. Install flush mounting box without damaging wall insulation or reducing its effectiveness.
S. Use adjustable steel channel fasteners for hung ceiling outlet box.
T. Do not fasten boxes to ceiling support wires.

U. Support boxes independently of conduit.
V. Use gang box where more than one device is mounted together. Do not use sectional box.
W. Use gang box with plaster ring for single device outlets.
X. Use cast outlet box in exterior locations exposed to the weather and wet locations and at all locations serving kitchen equipment.
Y. Large Pull Boxes: Use hinged enclosure in interior dry locations, surface-mounted cast metal box in other locations.
Z. Coordinate with other trades for box rough-in, such that control devices are grouped (i.e., thermostats, wall switches, volume controls, etc.).

3.3 INTERFACE WITH OTHER PRODUCTS

A. Coordinate installation of outlet box for equipment connected under Section 26 05 19 "Equipment Wiring Systems."

3.4 ADJUSTING

A. Refer to Section 01 70 00 "Execution and Closeout Requirements" for adjusting installed Work.
B. Adjust flush-mounting outlets to make front flush with finished wall material.
C. Install knockout closures in unused box openings.

3.5 CLEANING

A. Refer to Section 01 70 00 "Execution and Closeout Requirements" for cleaning installed Work.
B. Clean interior of boxes to remove dust, debris, and other material.
C. Clean exposed surfaces and restore finish.

3.6 REPAIR

A. Repair any areas or surfaces damaged during conduit installation.
B. Paint (resurface) to original condition.

END OF SECTION

SECTION 26 05 53 - ELECTRICAL IDENTIFICATION

PART 1 - GENERAL

1.1 SUMMARY

A. Section Includes:
   1. Nameplates and labels.
   2. Wire, conduit, and box markers.
B. Related Requirements:
   1. Division 01 Specification Sections apply to Work of this Section.

1.2 REFERENCES

A. ANSI/NFPA 70 - National Electrical Code.

PART 2 - PRODUCTS

2.1 NAMEPLATES AND LABELS

A. Nameplates and Labels: Engraved three-layer laminated plastic, white letters on black background.
B. Locations:
   1. Each electrical distribution and control equipment enclosure.
   2. Communication cabinets and computer cabinets.
   3. Field disconnects, start stop stations, control panels.
C. Letter Size:
   1. Use 1/4-inch letters for identifying individual equipment and loads.
   2. Use 1/4-inch letters for identifying grouped equipment and loads.
   3. Use 3/8-inch letters for identifying main disconnect equipment.
   4. Use 1/4-inch letters for identifying receptacle and light switches.

2.2 WIRE, CONDUIT, AND BOX MARKERS

A. Description: Brady B-321 Heat-Shrink Polyolefin markers. Typed label to identify each termination end point of the conductor. DC conductors shall identify polarity.
B. Locations: Each conductor at wireway, pull boxes, outlet and junction boxes, and each load connection. All conduit penetrations identifying the location of each end.
C. Legend:
   1. Power and Lighting Circuits: Branch circuit or feeder number indicated on Drawings.
D. Boxes:
   1. Label each junction box in accessible locations to indicate the type of system (i.e.; security; power circuit - 1, 3, 5; etc.).
   2. Provide label in each light switch and receptacle back box.

E. Panelboards:
1. Provide phenolic label with maximum available fault current at main switchboard. Utilize number as indicated in panel schedule.
2. Provide warning labels with arc-flash hazard warning for all electrical equipment as indicated in Article 110.16 of NEC.

PART 3 - EXECUTION

3.1 PREPARATION

A. Degrease and clean surfaces to receive nameplates and labels.

3.2 APPLICATION

A. Install nameplate and label parallel to equipment lines.
B. Secure nameplate to equipment front using screws or rivets.
C. Identify underground conduits using underground warning tape. Install one tape per trench at 12 inches below finished grade. Identify all conduit at exposed locations into all boxes, cabinets, etc. (see Specification Section 26 05 00 "Basic Electrical Methods").
D. Identify all conductors at every termination indicating endpoints of termination and tag identification as required.

120-208 Volts	Phase	277/480 Volts
Black	A	Brown
Red	B	Orange
Blue	C	Yellow
White	Neutral	Gray
Green	Ground	Green

E. Conductor phase and voltage identification shall be made by color-coded insulation for all conductors smaller than No. 6 AWG. For conductors No. 6 AWG and larger, identification shall be made by color-coded insulation, or conductors with black insulation may be furnished and identified by colored electrical tape. Conductor identification shall be provided within each enclosure where a tap, splice, or termination is made.

END OF SECTION

SECTION 26 18 39 - ENCLOSED MOTOR CONTROLLERS

PART 1 - GENERAL

1.1 SUMMARY

A. Section Includes:
   1. Manual controllers.
   2. Automatic controllers.
   3. Disconnects.

B. Related Requirements:
   1. Division 01 Specification Sections apply to Work of this Section.

1.2 REFERENCES

A. NFPA 70 - National Electrical Code.
B. UL 1 98C - High-Interrupting Capacity Fuses; Current Limiting Type.
C. UL 1 98E - Class R Fuses.
D. NECA "Standard of Installation," published by National Electrical Contractors Association.
E. NEMA ICS 2 - Industrial Control Devices, Controllers, and Assemblies.
F. NEMA ICS 6 - Enclosures for Industrial Controls and Systems.
G. NEMA KS 1 - Enclosed Switches.

1.3 SUBMITTALS

A. Submit under provisions of Section 01 33 00 "Submittal Procedures."
B. Product Data: Provide catalog sheets showing voltage, controller size, ratings and size of switching and overcurrent protective devices, short circuit ratings, dimensions, and enclosure details.
C. Test Reports: Indicate field test and inspection procedures and test results.
D. Manufacturer's Installation Instructions: Indicate application conditions and limitations of use stipulated by product testing agency specified under Regulatory Requirements. Include instructions for storage, handling, protection, examination, preparation, installation, and starting of product.

1.4 QUALITY ASSURANCE

A. Perform Work in accordance with NECA Standard of Installation.
B. Maintain one copy of each document on-site.

1.5 QUALIFICATIONS

A. Manufacturer: Company specializing in manufacturing products specified in this Section with minimum 3 years' documented experience.

1.6 REGULATORY REQUIREMENTS

A. Conform to requirements of NFPA 70.
B. Furnish products listed and classified by UL as suitable for purpose specified and indicated.

PART 2 - PRODUCTS

2.1 MANUAL CONTROLLERS

A. Manual Motor Controller: NEMA ICS 2, AC general-purpose Class A manually operated, full-voltage controller with overload element, NO auxiliary contact, and toggle operator.
B. Fractional Horsepower Manual Controller: NEMA ICS 2, AC general-purpose Class A manually operated, full-voltage controller for fractional horsepower induction motors, with thermal Overload unit, and toggle operator.
C. Enclosure: NEMA ICS 6; Type 1.

2.2 AUTOMATIC CONTROLLERS

A. Magnetic Motor Controllers: NEMA ICS 2, AC general-purpose Class A magnetic controller for induction motors rated in horsepower.
B. Coil Operating Voltage: 120 volts, 60 Hertz.
C. Overload Relay: NEMA ICS; electronic type; with phase loss and unbalance protection.
D. Enclosure: NEMA ICS 6, Type 1.

2.3 PRODUCT OPTIONS AND FEATURES

A. Auxiliary Contacts: NEMA ICS 2, 2 each field convertible contacts in addition to seal-in contact.
B. Cover Mounted Pilot Devices: NEMA ICS 2, heavy duty type.
C. Pushbuttons: Recessed type.
D. Indicating Lights: LED type.
E. Selector Switches: Rotary type.
F. Relays: NEMA ICS 2.
G. Control Power Transformers: 120 volt secondary. Provide fused primary and secondary, and bond unfused leg of secondary to enclosure.

2.4 DISCONNECTS

A. Combination Controllers: Combine motor controllers with fusible switch disconnect in common enclosure.
B. Fusible Switch Assemblies: NEMA KS 1, enclosed knife switch with externally operable handle. Fuse clips: Designed to accommodate Class R fuses.

2.5 FUSES

A. Description: Dual element, current limiting, time delay, one-time fuse, 250V volt, UL 198E, Class RK 5.
B. Interrupting Rating: 200,000 rms amperes.

PART 3 - EXECUTION

3.1 INSTALLATION

A. Install enclosed controllers where indicated, in accordance with manufacturer's instructions. Provide a motor controller for all equipment not furnished as integral with equipment. Coordinate actual motor loads with overload protection.
B. Install enclosed controllers plumb. Provide supports in accordance with Section 26 05 29 "Supporting Devices."
C. Height: 5 feet to operating handle.
D. Install fuses in fusible switches.
E. Select and install overload heater elements in motor controllers to match installed motor characteristics.
F. Provide engraved plastic nameplates under the provisions of Section 26 05 53 "Electrical Identification."
G. Provide neatly typed label inside each motor controller door identifying motor served, nameplate horsepower, full load amperes, code letter, service factor, and voltage/phase rating.

3.2 FIELD QUALITY CONTROL

A. Field inspection and testing will be performed under provisions of other Sections.
B. Inspect and test each enclosed controller to NEMA ICS 2.

END OF SECTION

SECTION 26 24 16 - PANELBOARDS

PART 1 - GENERAL

1.1 SUMMARY

A. Section Includes:
   1. Distribution and branch circuit panelboards.
B. Related Requirements:
   1. Division 01 Specification Sections apply to Work of this Section.
   2. Section 26 05 29 "Supporting Devices."
   3. Section 26 05 53 "Electrical Identification" for engraved nameplates.

1.2 REFERENCES

A. NECA (National Electrical Contractors Association) "Standard of Installation."
B. NEMA AB 1 - Molded Case Circuit Breakers.
C. NEMA ICS 2 - Industrial Control Devices, Controllers, and Assemblies.
D. NEMA KS 1 - Enclosed Switches.
E. NEMA PB 1 - Panelboards.
F. NEMA PB-2 - Switchboards.
G. NEMA PB 1.1 - Instructions for Safe Installation, Operation and Maintenance of Panelboards Rated 600 Volts or Less.
H. NFPA 70 - National Electrical Code.

1.3 SUBMITTALS

A. Shop Drawings: Indicate outline and support point dimensions, voltage, main bus ampacity, integrated short circuit ampere rating, circuit breaker, fusible switch arrangement, and sizes.
B. Manufacturer's Installation Instructions: Indicate application conditions and limitations of use stipulated by product testing agency. Include instructions for storage, handling, protection, examination, preparation, installation, and starting of product.
C. Switchboard and panelboard manufacturer shall provide short circuit and arc fault calculations per NEC requirements. Equipment shall be rated per calculations.

1.4 PROJECT RECORD DOCUMENTS

A. Submit under provisions of General Conditions. Record actual locations of products; indicate actual branch circuit arrangement.

1.5 OPERATION AND MAINTENANCE DATA

A. Submit under provisions of General Conditions. Maintenance Data: Include spare parts data listing; and recommended maintenance procedures and intervals.

1.6 QUALITY ASSURANCE

A. Perform Work in accordance with NECA Standard of Installation.

1.7 QUALIFICATIONS

A. Manufacturer: Company specializing in manufacturing products specified in this Section with minimum 5 years' experience.

1.8 REGULATORY REQUIREMENTS

A. Conform to requirements of NFPA 70. Furnish products listed and classified by UL as suitable for purpose specified and indicated.

1.9 FIELD MEASUREMENTS

A. Verify that field measurements are as indicated.

1.10 MAINTENANCE MATERIALS

A. Provide maintenance materials under provisions of General Conditions. Provide two of each panelboard key if required.

PART 2 - PRODUCTS

2.1 PANELBOARDS

A. Manufacturers:
   1. Eaton.
   2. G.E.
   3. Siemens.
   4. Square-D.

B. Description: NEMA PB-1, circuit breaker type.

C. Panelboard Bus: Copper with ratings as indicated. Provide a copper ground bus in each panelboard.

D. Minimum integrated short circuit rating: Fully rated devices with minimum levels as indicated. Series rated systems will not be allowed. Minimum calculated values are labeled on each panelboard and are indicated as "AIC."

E. Molded Case Circuit Breakers: NEMA AB 1, bolt-on, circuit breakers with integral thermal and instantaneous magnetic trip in each pole. Provide circuit breakers UL listed as type HACR for air-conditioning equipment loads and type SWD for switching applications.

F. Enclosure: NEMA PB-1, Type 1.

G. Cabinet Front: Surface or recessed type as indicated on the Drawings, fastened with concealed trim clamps, hinged door with flush lock, metal directory frame, and finished in manufacturer's standard gray enamel.

PART 3 - EXECUTION

3.1 INSTALLATION

A. Install panelboards in accordance with NEMA PB 1.1. Install panelboards plumb. Provide supports in accordance with drawings and Section 26 05 29 "Supporting Devices." Height: 6-foot maximum to top of panelboard. Provide filler plates for unused spaces in panelboards. Provide typed circuit directory for each branch circuit panelboard. Revise directory to reflect circuiting changes required to balance phase loads. Spare slots shall be labeled as such in erasable pencil on directory. Provide engraved plastic nameplates under the provisions of Section 26 05 53 "Electrical Identification."

B. Provide two empty 1-inch conduits from each recessed panelboard to an accessible location above and label as "spare."

C. Ground each panelboard in accordance with Section 26 05 26 "Grounding and Bonding."

D. Prove a 4-inch concrete housekeeping pad for switchboard.

3.2 FIELD QUALITY CONTROL

A. Field inspection and test for grounds on each circuit after installation is completed. Measure steady state load currents at each panelboard feeder; rearrange circuits in the panelboard to balance the phase loads to within 20 percent of each other. Maintain proper phasing for multi-wire branch circuits.

B. Visual and Mechanical Inspection: Inspect for physical damage, proper alignment, anchorage, and grounding. Check proper installation and tightness of connections for circuit breakers, fusible switches, and fuses.

END OF SECTION

SECTION 26 27 26 - WIRING DEVICES

PART 1 - GENERAL

1.1 SUMMARY

A. Section Includes:
   1. Wall switches.
   2. Receptacles.
   3. Wall plates.

B. Related Requirements:
   1. Division 01 Specification Sections apply to Work of this Section.
   2. Section 26 05 33.16 "Boxes."

1.2 REFERENCES

A. NECA - Standard of Installation.
B. NEMA WD 1 - General Requirements for Wiring Devices.
C. NEMA WD 6 - Wiring Device - Dimensional Requirements.
D. NFPA 70 - National Electrical Code.

1.3 SUBMITTALS FOR REVIEW

A. Refer to Section 01 33 00 "Submittal Procedures."
B. Product Data: Provide manufacturer's catalog information showing dimensions, colors, and configurations.
C. Manufacturers with similar catalog numbers will not be considered as a basis for an equivalent product.

1.4 QUALIFICATIONS

A. Manufacturer: Company specializing in manufacturing products specified in this Section with minimum 3 years' documented experience.

1.5 REGULATORY REQUIREMENTS

A. Conform to requirements of NFPA 70.
B. Provide products listed and classified by UL as suitable for the purpose specified and indicated.

PART 2 - PRODUCTS

2.1 WALL SWITCHES

A. Manufacturers:
   1. Hubbell PRO 1221-W.
   2. Substitutions: Refer to Section 01 60 00 "Product Requirements."

B. Description: NEMA WD 1, 20 amp, Heavy-Duty, AC only general-use snap switch.

C. Body and Handle: Nylon white handle.
D. Utilize equivalent series of manufacturer's numbers above for three-way, four-way, and two-pole applications.
E. Refer to drawings for Lighting Control Sequence Matrix for additional lighting control devices and requirements. Lighting Controls shall be equal to Acuity Brands, nLight system. All devices shall be white.

2.2 RECEPTACLES

A. Manufacturers:
1. Hubbell PRO 5352-W.
2. Substitutions: Refer to Section 01 60 00 "Product Requirements." Equivalent.
B. Description: NEMA WD 1, Heavy-duty, general-use receptacle, with triple wipe contacts and grounding contacts integral with backstrap (no rivets).
C. Device Body: White plastic.
D. Configuration: NEMA WD 6, type as specified and indicated.
E. Convenience Receptacle: Type 5-20.
F. GFCI Receptacle: Convenience receptacle with integral ground fault circuit interrupter to meet regulatory requirements. Hubbell GF5352-W or equivalent.

2.3 WALL PLATES

A. Decorative Cover Plate: Stainless steel.
B. Weatherproof Cover Plate: Gasketed cast metal with gasketed device cover on exterior devices.
C. Surface Mounted Plates: Galvanized steel plates.

PART 3 - EXECUTION

3.1 EXAMINATION

A. Refer to Section 01 30 00 "Administrative Requirements" for verification of existing conditions prior to beginning Work.
B. Verify that outlet boxes are installed at proper height.
C. Verify that wall openings are neatly cut and will be completely covered by wall plates.
D. Verify that branch circuit wiring installation is completed, tested, and ready for connection to wiring devices.
E. Verify installation location of all boxes to be installed in millwork with Engineer.

3.2 PREPARATION

A. Provide extension rings to bring outlet boxes flush with finished surface.
B. Clean debris from outlet boxes.

3.3 INSTALLATION

A. Install in accordance with NECA "Standard of Installation."
B. Install devices plumb and level.
C. Install switches with OFF position down.
D. Do not share neutral conductor on load side of dimmers.

E. Install receptacles with grounding pole located on the bottom as required by Owner.
F. Connect wiring device grounding terminal to branch circuit equipment grounding conductor.
G. Install decorative plates on switch, receptacle, and blank outlets in finished areas.
H. Connect wiring devices by wrapping conductor around screw terminal.
I. Use jumbo size plates for outlets installed in masonry walls.
J. Install galvanized steel plates on outlet boxes and junction boxes in unfinished areas, above accessible ceilings, and on surface mounted outlets.
K. Install blank cover plate to match other wall plates on all unused boxes.

3.4 INTERFACE WITH OTHER PRODUCTS

A. Coordinate locations of outlet boxes provided under Section 26 05 33.16 "Boxes" to obtain mounting heights specified and indicated on Drawings.
B. Install all wall switches, thermostats, and fire alarm pull stations at 48 inches above finished floor.
C. Install convenience receptacle 18 inches above finished floor.
D. Install convenience receptacle 6 inches above backsplash of counter unless otherwise directed by Engineer.
E. Install telephone jack 18 inches above finished floor.
F. Install telephone for jack wall telephone to position top of telephone at 48 inches above finished floor.

3.5 FIELD QUALITY CONTROL

A. Refer to Section 01 40 00 "Quality Requirements" for field inspection, testing, adjusting, and balancing.
B. Inspect each wiring device for defects.
C. Operate each wall switch with circuit energized and verify proper operation.
D. Verify that each receptacle device is energized.
E. Test each receptacle device for proper polarity.
F. Test each GFCI receptacle device for proper operation.

3.6 ADJUSTING

A. Refer to Section 01 70 00 "Execution and Closeout Requirements" for adjusting installed work.
B. Adjust devices and wall plates to be flush and level.

3.7 CLEANING

A. Refer to Section 01 70 00 "Execution and Closeout Requirements" for cleaning installed Work.
B. Clean exposed surfaces to remove splatters and restore finish.

END OF SECTION

SECTION 26 28 16.16 - ENCLOSED SWITCHES

PART 1 - GENERAL

1.1 SUMMARY

A. Section Includes:
   1. Fusible switches.
   2. Non-fusible switches.
   3. Fuses.
B. Related Requirements:
   1. Division 01 Specification Sections apply to Work of this Section.

1.2 REFERENCES

A. NEMA KS 1 - Enclosed Switches.
B. NFPA 70 - National Electrical Code.
C. UL 198C - High-Interrupting Capacity Fuses; Current Limiting Type.
D. UL 198E - Class R Fuses.
E. NEMA AB 1 - Molded Case Circuit Breakers.
F. NECA - Standard of Installation.

1.3 SUBMITTALS

A. Submit under provisions of Section 01 33 00 "Submittal Procedures."
B. Product Data: Provide switch ratings and enclosure dimensions.

1.4 QUALITY ASSURANCE

A. Perform Work in accordance with NECA Standard of Installation.

1.5 QUALIFICATIONS

A. Manufacturer: Company specializing in manufacturing products specified in this Section with minimum 3 years' documented experience.

1.6 REGULATORY REQUIREMENTS

A. Conform to requirements of NFPA 70.
B. Furnish products listed and classified by UL as suitable for purpose specified and shown.

PART 2 - PRODUCTS

2.1 MANUFACTURERS

A. Eaton.
B. General Electric.
C. Siemens.
D. Square D.

2.2 ENCLOSED SWITCHES

A. Fusible or Non-fusible as indicated.
B. Switch Assemblies: NEMA KS 1, Type HD load interrupter enclosed knife switch with externally operable handle interlocked to prevent opening front cover with switch in ON position. Handle lockable in OFF position.
C. Fuse Clips: Designed to accommodate NEMA FU1, class R fuses.
D. Enclosures: NEMA KS 1.
E. Interior Dry Locations: Type 1.
F. Exterior Locations: Type 3R or 4.
G. NEMA ratings of enclosures as specified on Drawings take precedence over location Specification.
H. Current rating of switch to be equal to or greater than that of the circuit it is interrupting.

2.3 FUSES

A. Manufacturers:
   1. Bussman.
   2. Gould Shawmut.
   3. Littlefuse.
B. Dimensions and Performance: NEMA FU 1, Class as specified or indicated.
C. Voltage: Provide fuses with suitable voltage ratings for phase to phase voltages.
D. Service Entrance: Class L, Bussman Low-peak or equivalent.
E. General Purpose Loads: Class RK1, Bussman Low-peak or equivalent.
F. Motor Loads: Class RK5, Bussman Fusetron or equivalent.

PART 3 - EXECUTION

3.1 INSTALLATION

A. Install in accordance with NECA Standard of Installation.
B. Install fuses in all fusible disconnects.
C. Apply adhesive tag on the inside door of all disconnects indicating the NEMA class fuse and size installed.
D. Provide a disconnect switch for all equipment where indicated or required by the National Electrical Code. Coordinate with other disciplines to determine where disconnects are furnished with equipment.

END OF SECTION

SECTION 26 51 00 - INTERIOR LIGHTING

PART 1 - GENERAL

1.1 SUMMARY

A. Section Includes:
   1. Luminaires.
   2. Exit signs.
B. Related Requirements:
   1. Division 01 Specification Sections apply to Work of this Section.

1.2 REFERENCES

A. NEMA WD 6 - Wiring Devices-Dimensional Requirements.
B. NFPA 70 - National Electrical Code.
C. NFPA 101 - Life Safety Code.

1.3 SUBMITTALS

A. Refer to Section 01 33 00 "Submittal Procedures" for Submittals.
B. Shop Drawings: Indicate dimensions and components for each luminaire that is not a standard product of the manufacturer.
C. Product Data: Provide dimensions, ratings, and performance data.

1.4 SUBSTITUTIONS

A. Refer to Section 26 05 00 "Basic Electrical Methods" for requirements.

1.5 CLOSEOUT SUBMITTALS

A. Refer to Section 01 70 00 "Execution and Closeout Requirements" for Submittals for Project closeout.
B. Operation and Maintenance Data: Submit manufacturer's operation and maintenance instructions for each product.

1.6 QUALIFICATIONS

A. Manufacturer: Company specializing in manufacturing products specified in this Section with minimum 3 years' documented experience.

1.7 REGULATORY REQUIREMENTS

A. Conform to requirements of NFPA 70.
B. Conform to requirements of NFPA 101.
C. Products: Listed and classified by UL as suitable for the purpose specified and indicated.

PART 2 - PRODUCTS

2.1 LUMINAIRES

A. Furnish products as scheduled. Refer to Section 01 60 00 "Product Requirements" for substitutions and product options.

2.2 EXIT SIGNS

A. Furnish products as scheduled.

PART 3 - EXECUTION

3.1 INSTALLATION

A. Install suspended luminaires using pendants supported from swivel hangers. Provide pendant length required to suspend luminaire at indicated height.
B. Locate recessed ceiling luminaires as indicated on reflected ceiling plan.
C. Install surface mounted luminaires and exit signs plumb and adjust to align with building lines and with each other. Secure to prevent movement.
D. Exposed Grid Ceilings: Support surface mounted luminaires on grid ceiling directly from building structure.
E. Install recessed luminaires to permit removal from below.
F. Install recessed luminaires using accessories and firestopping materials to meet regulatory requirements for fire rating in locations where fire rated ceilings are present.
G. Install clips to secure recessed grid-supported luminaires in place.
H. Install wall mounted luminaires, emergency lighting units and exit signs at height as indicated on the Drawings or as scheduled.
I. Install accessories furnished with each luminaire.
J. Make wiring connections to branch circuit using building wire with insulation suitable for temperature conditions within luminaire.
K. Bond products and metal accessories to branch circuit equipment grounding conductor.
L. Install specified lamps in each emergency lighting unit, exit sign, and luminaire.

3.2 FIELD QUALITY CONTROL

A. Refer to Section 01 40 00 "Quality Requirements" for field inspection, testing, and adjusting.
B. Operate each luminaire after installation and connection. Inspect for proper connection and operation.

3.3 ADJUSTING

A. Refer to Section 01 70 00 "Execution and Closeout Requirements" for adjusting installed work.
B. Aim and adjust luminaires as directed.
C. Position exit sign directional arrows as indicated.
D. Contractor shall readjust occupancy sensor (time and sensitivity) at or before the end of 1-year warranty period.

3.4 CLEANING

A. Refer to Section 01 70 00 "Execution and Closeout Requirements" for cleaning installed Work.
B. Clean electrical parts to remove conductive and deleterious materials.
C. Remove dirt and debris from enclosures.
D. Clean photometric control surfaces as recommended by manufacturer.
E. Clean finishes and touch up damage.

3.5 DEMONSTRATION AND INSTRUCTIONS

A. Refer to Section 01 70 00 "Execution and Closeout Requirements" for demonstrating installed Work.

3.6 PROTECTION OF FINISHED WORK

A. Refer to Section 01 70 00 "Execution and Closeout Requirements" for protecting installed Work.
B. Replace luminaires that have failed prior to Substantial Completion.

END OF SECTION

SECTION 31 10 00 - SITE CLEARING

PART 1 - GENERAL

1.1 SUMMARY

A. Section Includes:
   1. Removing surface debris.
   2. Removing above- and below-grade site improvements.
   3. Removing designated trees, schrubs, and other plant life.
   4. Disconnecting, capping or sealing.

B. Related Requirements:
   1. Division 01 Specification Sections apply to Work of this Section.
   2. Section 01 50 00 "Temporary Facilities and Controls" for temporary erosion- and sedimentation-control measures.

1.2 DEFINITIONS

A. Subsoil: Soil beneath the level of subgrade; soil beneath the topsoil layers of a naturally occurring soil profile typified by less than 1 percent organic matter and few soil organisms.

B. Surface Soil: Soil that is present at the top layer of the existing soil profile. In undisturbed areas, surface soil is typically called "topsoil," but in disturbed areas, such as urban environments, the surface soil can be subsoil.

C. Topsoil: Top layer of the soil profile consisting of existing native surface topsoil or existing in-place surface soil; the zone where plant roots grow.

D. Topsoil: Top layer of the soil profile consisting of existing native surface topsoil or existing in-place surface soil; the zone where plant roots grow. Its appearance is generally friable, pervious, and black or a darker shade of brown, gray, or red than underlying subsoil; reasonably free of subsoil, clay lumps, gravel, and other objects larger than 2 inches in diameter; and free of weeds, roots, toxic materials, or other nonsoil materials.

E. Plant-Protection Zone: Area surrounding individual trees, groups of trees, shrubs, or other vegetation to be protected during construction and indicated on Drawings.

F. Tree-Protection Zone: Area surrounding individual trees or groups of trees to be protected during construction and indicated on Drawings.

G. Vegetation: Trees, shrubs, groundcovers, grass, and other plants.

1.3 PREINSTALLATION MEETINGS

A. Preinstallation Conference: Conduct conference at Project site.

1.4 MATERIAL OWNERSHIP

A. Except for materials indicated to be stockpiled or otherwise remain Owner's property, cleared materials shall become Contractor's property and shall be removed from Project site.

1.5 SUBMITTALS

A. Section 01 33 00 "Submittal Procedures" for requirements for submittals.
B. Product Data: Submit data for herbicide. Indicate compliance with applicable codes for environmental protection.

1.6 INFORMATIONAL SUBMITTALS

A. Existing Conditions: Documentation of existing trees and plantings, adjoining construction, and site improvements that establishes preconstruction conditions that might be misconstrued as damage caused by site clearing.
   1. Use sufficiently detailed photographs or video recordings.
   2. Include Plans and notations to indicate specific wounds and damage conditions of each tree or other plant designated to remain.
B. Topsoil stripping and stockpiling program.
C. Rock stockpiling program.
D. Record Drawings: Identifying and accurately showing locations of capped utilities and other subsurface structural, electrical, and mechanical conditions.
E. Burning: Documentation of compliance with burning requirements and permitting of authorities having jurisdiction. Identify location(s) and conditions under which burning will be performed.

1.7 QUALITY ASSURANCE

A. Conform to applicable codes for disposal of debris.
B. Perform Work in accordance with State of Texas Highways standard.
C. Topsoil Stripping and Stockpiling Program: Prepare a written program to systematically demonstrate the ability of personnel to properly follow procedures and handle materials and equipment during the Work. Include dimensioned diagrams for placement and protection of stockpiles.
D. Rock Stockpiling Program: Prepare a written program to systematically demonstrate the ability of personnel to properly follow procedures and handle materials and equipment during the Work. Include dimensioned diagrams for placement and protection of stockpiles.

1.8 FIELD CONDITIONS

A. Traffic: Minimize interference with adjoining roads, streets, walks, and other adjacent occupied or used facilities during site-clearing operations.
   1. Do not close or obstruct streets, walks, or other adjacent occupied or used facilities without permission from Owner and authorities having jurisdiction.
   2. Provide alternate routes around closed or obstructed trafficways if required by Owner or authorities having jurisdiction.
B. Improvements on Adjoining Property: Authority for performing site clearing indicated on property adjoining Owner's property will be obtained by Owner before award of Contract.
   1. Do not proceed with work on adjoining property until directed by Primary Designer.
C. Salvageable Improvements: Carefully remove items indicated to be salvaged and store on Owner's premises where indicated.
D. Utility Locator Service: Notify utility locator service for area where Project is located before site clearing.

E. Do not commence site clearing operations until temporary erosion- and sedimentation-control measures are in place.
F. Soil Stripping, Handling, and Stockpiling: Perform only when the soil is dry or slightly moist.

PART 2 - PRODUCTS

2.1 MATERIALS

A. Satisfactory Soil Material: Requirements for satisfactory soil material are specified in Section 31 20 00 "Earth Moving."
   1. Obtain approved borrow soil material off-site when satisfactory soil material is not available on-site.

PART 3 - EXECUTION

3.1 PREPARATION

A. Call Local Utility Line Information service not less than 3 workings day before performing Work.
   1. Request underground utilities to be located and marked within and surrounding construction areas.

3.2 PREPARATION

A. Protect and maintain benchmarks and survey control points from disturbance during construction.
B. Verify that trees, shrubs, and other vegetation to remain or to be relocated have been flagged and that protection zones have been identified and enclosed according to requirements in Section 01 56 39 "Temporary Tree and Plant Protection."
C. Protect existing site improvements to remain from damage during construction.
   1. Restore damaged improvements to their original condition, as acceptable to Owner.
D. Identify waste area for placing removed materials.

3.3 TEMPORARY EROSION AND SEDIMENTATION CONTROL

A. Provide temporary erosion- and sedimentation-control measures to prevent soil erosion and discharge of soil-bearing water runoff or airborne dust to adjacent properties and walkways according to erosion- and sedimentation-control Drawings and requirements of authorities having jurisdiction.
B. Inspect, maintain, and repair erosion- and sedimentation-control measures during construction until permanent vegetation has been established.
C. Remove erosion and sedimentation controls and restore and stabilize areas disturbed during removal.

3.4 EXISTING UTILITIES

A. Owner will arrange for disconnecting and sealing indicated utilities that serve existing structures before site clearing, when requested by Contractor.
   1. Verify that utilities have been disconnected and capped before proceeding with site clearing.
B. Locate, identify, disconnect, and seal or cap utilities indicated to be removed.
   1. Arrange with utility companies to shut off indicated utilities.
   2. Owner will arrange to shut off indicated utilities when requested by Contractor.
C. Locate, identify, disconnect, cut, and plug utilities indicated to in place.
D. Interrupting Existing Utilities: Do not interrupt utilities serving facilities occupied by Owner or others, unless permitted under the following conditions, then only after arranging to provide temporary utility services according to requirements indicated:
   1. Notify Primary Designer not less than 2 days in advance of proposed utility interruptions.
   2. Do not proceed with utility interruptions without Primary Designer's written permission.
E. Excavate for and remove underground utilities indicated to be removed.
F. Removal of underground utilities is included in earthwork sections, in applicable fire suppression, plumbing, HVAC, electrical, communications, electronic safety and security, and utilities sections, and in Section 02 41 16 "Structure Demolition" and Section 02 41 19 "Selective Demolition."

3.5 CLEARING AND GRUBBING

A. Remove obstructions, trees, shrubs, and other vegetation to permit installation of new construction.
   1. Do not remove trees, shrubs, and other vegetation indicated to remain or to be relocated.
   2. Grind down stumps and remove roots larger than 2 inches in diameter, obstructions, and debris to a depth of 18 inches below exposed subgrade.
   3. Use only hand methods or air spade for grubbing within protection zones.
   4. Chip removed tree branches and stockpile in areas approved by Primary Designer.
   5. Clear undergrowth and deadwood without disturbing subsoil.
   6. Apply herbicide to remaining remaining stumps to inhibit growth.
B. Fill depressions caused by clearing and grubbing operations with satisfactory soil material unless further excavation or earthwork is indicated.
   1. Place fill material in horizontal layers not exceeding a loose depth of 8 inches and compact each layer to a density equal to adjacent original ground.

3.6 TOPSOIL STRIPPING

A. Remove sod and grass before stripping topsoil.
B. Strip topsoil to depth indicated on Drawings in a manner to prevent intermingling with underlying subsoil or other waste materials.
   1. Remove subsoil and nonsoil materials from topsoil including clay lumps, gravel, other objects larger than 2 inches in diameter, trash, debris, weeds, roots, and other waste materials.

C. Stockpile topsoil away from edge of excavations without intermixing with subsoil or other materials. Grade and shape stockpiles to drain surface water. Cover to prevent windblown dust and erosion by water.
   1. Limit height of topsoil stockpiles to 72 inches.
   2. Do not stockpile topsoil within protection zones.
   3. Dispose of surplus topsoil. Surplus topsoil is that which exceeds quantity indicated to be stockpiled or reused.
   4. Stockpile surplus topsoil to allow for respreading deeper topsoil.
   5. Stockpile sufficient quantities of on-site topsoil to later spread a minimum 6-inch-thickness off topsoil on landscaped (non-paved) Project areas.

3.7 SITE IMPROVEMENTS

A. Remove existing above- and below-grade improvements as indicated and necessary to facilitate new construction.

B. Remove slabs, paving, curbs, gutters, and aggregate base as indicated.
   1. Unless existing full-depth joints coincide with line of demolition, neatly saw-cut along line of existing pavement to remain before removing adjacent existing pavement. Saw-cut faces vertically.
   2. Paint cut ends of steel reinforcement in concrete to remain with 2 coats of antirust coating following coating manufacturer's written instructions. Keep paint off surfaces that will remain exposed.

3.8 DISPOSAL OF SURPLUS AND WASTE MATERIALS

A. Remove surplus soil material, unsuitable topsoil, obstructions, demolished materials, and waste materials including trash and debris and legally dispose of them off Owner's property.

END OF SECTION

SECTION 31 20 00 - EARTH MOVING

PART 1 - GENERAL

1.1 SUMMARY

A. Section Includes:
   1. Excavating and filling for rough grading the Site.
   2. Preparing subgrades for slabs-on-grade, walks, pavements, turf and grasses, and plants.
   3. Excavating and backfilling for buildings and structures.
   4. Drainage course for concrete slabs-on-grade.
   5. Subbase course for concrete pavements.
   6. Subbase course and base course for asphalt paving.
   7. Subsurface drainage backfill for walls and trenches.
   8. Excavating and backfilling trenches for utilities and pits for buried utility structures.

B. Related Requirements:
   1. Division 01 Specification Sections apply to Work of this Section.
   2. Section 31 10 00 "Site Clearing" for site stripping, grubbing, stripping and stockpiling topsoil, and removal of above- and below-grade improvements and utilities.

1.2 DEFINITIONS

A. Backfill: Soil material or controlled low-strength material used to fill an excavation.
   1. Initial Backfill: Backfill placed beside and over pipe in a trench including haunches to support sides of pipe.
   2. Final Backfill: Backfill placed over initial backfill to fill a trench.

B. Base Course: Aggregate layer placed between the subbase course and hot-mix asphalt paving.

C. Bedding Course: Aggregate layer placed over the excavated subgrade in a trench before laying pipe.

D. Borrow Soil: Satisfactory soil imported from off-site for use as fill or backfill.

E. Drainage Course: Aggregate layer supporting the slab-on-grade that also minimizes upward capillary flow of pore water.

F. Excavation: Removal of material encountered above subgrade elevations and to lines and dimensions indicated.
   1. Authorized Additional Excavation: Excavation below subgrade elevations or beyond indicated lines and dimensions as directed by Primary Designer. Authorized additional excavation and replacement material will be paid for according to Contract provisions for changes in the Work.
   2. Bulk Excavation: Excavation more than 10 feet in width and more than 30 feet in length.
   3. Unauthorized Excavation: Excavation below subgrade elevations or beyond indicated lines and dimensions without direction by Primary Designer. Unauthorized excavation, as well as remedial Work directed by Primary Designer shall be without additional compensation.

G. Fill: Soil materials used to raise existing grades.

H. Rock: Rock material in beds, ledges, unstratified masses, conglomerate deposits, and boulders of rock material 3/4 cubic yards or more in volume that exceed a standard penetration resistance of 100 blows/2 inches when tested by a geotechnical testing agency according to ASTM D1586.

I. Structures: Buildings, footings, foundations, retaining walls, slabs, tanks, curbs, mechanical and electrical appurtenances, or other man-made stationary features constructed above or below the ground surface.

J. Subbase Course: Aggregate layer placed between the subgrade and base course for hot-mix asphalt pavement or aggregate layer placed between the subgrade and a cement concrete pavement or a cement concrete or hot-mix asphalt walk.

K. Subgrade: Uppermost surface of an excavation or the top surface of a fill or backfill immediately below subbase, drainage fill, drainage course, or topsoil materials.

L. Utilities: On-site underground pipes, conduits, ducts, and cables as well as underground services within buildings.

1.3 INFORMATIONAL SUBMITTALS

A. Qualification Data: For qualified testing agency.

B. Material Test Reports: For each on-site and borrow soil material proposed for fill and backfill as follows:
   1. Classification according to ASTM D2487.
   2. Laboratory compaction curve according to ASTM D698.

C. Preexcavation Photographs or Videotape: Show existing conditions of adjoining construction and site improvements including finish surfaces that might be misconstrued as damage caused by earth-moving operations. Submit before earth moving begins.

1.4 FIELD CONDITIONS

A. Traffic: Minimize interference with adjoining roads, streets, walks, and other adjacent occupied or used facilities during earth-moving operations.
   1. Do not close or obstruct streets, walks, or other adjacent occupied or used facilities without permission from Owner and authorities having jurisdiction.
   2. Provide alternate routes around closed or obstructed traffic ways if required by Owner or authorities having jurisdiction.

B. Utility Locator Service: Notify utility locator service for area where Project is located before beginning earth-moving operations.

C. Do not commence earth-moving operations until temporary site fencing and erosion- and sedimentation-control measures specified in Section 01 50 00 "Temporary Facilities and Controls" and Section 31 10 00 "Site Clearing" are in place.

PART 2 - PRODUCTS

2.1 SOIL MATERIALS

A. General: Provide borrow soil materials when sufficient satisfactory soil materials are not available from excavations.

B. Satisfactory Soils: Soil Classification Groups GW, GP, GM, SW, SP, and SM according to ASTM D2487, or a combination of these groups; free of rock or gravel larger than 3 inches in any dimension, debris, waste, frozen materials, vegetation, and other deleterious matter.

C. Unsatisfactory Soils: Soil Classification Groups GC, SC, CL, ML, OL, CH, MH, OH, and PT according to ASTM D2487, or a combination of these groups.
   1. Unsatisfactory soils also include satisfactory soils not maintained within 2 percent of optimum moisture content at time of compaction.
D. Subbase Material: Naturally or artificially graded mixture of natural or crushed gravel, crushed stone, and natural or crushed sand; ASTM D2940; with at least 90 percent passing a 1-1/2-inch sieve and not more than 12 percent passing a No. 200 sieve.
E. Base Course: Naturally or artificially graded mixture of natural or crushed gravel, crushed stone, and natural or crushed sand; ASTM D2940; with at least 95 percent passing a 1-1/2-inch sieve and not more than 8 percent passing a No. 200 sieve.
F. Engineered Fill: Naturally or artificially graded mixture of natural or crushed gravel, crushed stone, and natural or crushed sand; ASTM D2940; with at least 90 percent passing a 1-1/2-inch sieve and not more than 12 percent passing a No. 200 sieve.
G. Bedding Course: Naturally or artificially graded mixture of natural or crushed gravel, crushed stone, and natural or crushed sand; ASTM D2940; except with 100 percent passing a 1-inch sieve and not more than 8 percent passing a No. 200 sieve.
H. Drainage Course: Narrowly graded mixture of washed crushed stone, or crushed or uncrushed gravel; ASTM D448; coarse-aggregate grading Size 57; with 100 percent passing a 1-1/2-inch sieve and zero to 5 percent passing a No. 8 sieve.
I. Filter Material: Narrowly graded mixture of natural or crushed gravel, or crushed stone and natural sand; ASTM D448; coarse-aggregate grading Size 67; with 100 percent passing a 1-inch sieve and zero to 5 percent passing a No. 4 sieve.
J. Sand: ASTM C33; fine aggregate.
K. Impervious Fill: Clayey gravel and sand mixture capable of compacting to a dense state.

2.2 ACCESSORIES

A. Detectable Warning Tape: Acid- and alkali-resistant, polyethylene film warning tape manufactured for marking and identifying underground utilities, a minimum of 6 inches-wide and 4 mils thick, continuously inscribed with a description of the utility, with metallic core encased in a protective jacket for corrosion protection, detectable by metal detector when tape is buried up to 30 inches deep; colored as follows:
   1. Red: Electric.
   2. Yellow: Gas, oil, steam, and dangerous materials.
   3. Orange: Telephone and other communications.
   4. Blue: Water systems.
   5. Green: Sewer systems.

PART 3 - EXECUTION

3.1 PREPARATION

A. Protect structures, utilities, sidewalks, pavements, and other facilities from damage caused by settlement, lateral movement, undermining, washout, and other hazards created by earth-moving operations.
B. Protect and maintain erosion and sedimentation controls during earth-moving operations.
C. Protect subgrades and foundation soils from freezing temperatures and frost. Remove temporary protection before placing subsequent materials.

3.2 DEWATERING

A. Provide dewatering system of sufficient scope, size, and capacity to control hydrostatic pressures and to lower, control, remove, and dispose of ground water and permit excavation and construction to proceed on dry, stable subgrades.

B. Prevent surface water and ground water from entering excavations, from ponding on prepared subgrades, and from flooding Project site and surrounding area.

C. Protect subgrades from softening, undermining, washout, and damage by rain or water accumulation.

1. Reroute surface water runoff away from excavated areas. Do not allow water to accumulate in excavations. Do not use excavated trenches as temporary drainage ditches.

D. Dispose of water removed by dewatering in a manner that avoids endangering public health, property, and portions of Work under construction or completed. Dispose of water and sediment in a manner that avoids inconvenience to others.

3.3 EXPLOSIVES

A. Explosives: Do not use explosives.

3.4 EXCAVATION, GENERAL

A. Unclassified Excavation: Excavate to subgrade elevations regardless of the character of surface and subsurface conditions encountered. Unclassified excavated materials may include rock, soil materials, and obstructions. No changes in the Contract Sum or the Contract Time will be authorized for rock excavation or removal of obstructions.

1. If excavated materials intended for fill and backfill include unsatisfactory soil materials and rock, replace with satisfactory soil materials.
2. Remove rock to lines and grades indicated to permit installation of permanent construction without exceeding the following dimensions:
    a. 24 inches outside of concrete forms other than at footings.
    b. 12 inches outside of concrete forms at footings.
    c. 6 inches outside of minimum required dimensions of concrete cast against grade.
    d. Outside dimensions of concrete walls indicated to be cast against rock without forms or exterior waterproofing treatments.
    e. 6 inches beneath bottom of concrete slabs-on-grade.
    f. 6 inches beneath pipe in trenches and the greater of 24 inches wider than pipe or 42 inches wide.

3.5 EXCAVATION FOR STRUCTURES

A. Excavate to indicate elevations and dimensions within a tolerance of plus or minus 1-inch. If applicable, extend excavations a sufficient distance from structures for placing and removing concrete formwork, for installing services and other construction, and for inspections.

1. Excavations for Footings and Foundations: Do not disturb bottom of excavation. Excavate by hand to final grade just before placing concrete reinforcement. Trim bottoms to required lines and grades to leave solid base to receive other Work.

2. Pile Foundations: Stop excavations 6 to 12 inches above bottom of pile cap before piles are placed. After piles have been driven, remove loose and displaced material. Excavate to final grade leaving solid base to receive concrete pile caps.
3. Excavation for Underground Tanks, Basins, and Mechanical or Electrical Utility Structures: Excavate to elevations and dimensions indicated within a tolerance of plus or minus 1-inch. Do not disturb bottom of excavations intended as bearing surfaces.

3.6 EXCAVATION FOR WALKS AND PAVEMENTS

A. Excavate surfaces under walks and pavements to indicated lines, cross sections, elevations, and subgrades.

3.7 EXCAVATION FOR UTILITY TRENCHES

A. Excavate trenches to indicated gradients, lines, depths, and elevations.
   1. Beyond building perimeter, excavate trenches to allow installation of top of pipe below frost line.
B. Excavate trenches to uniform widths to provide the following clearance on each side of pipe or conduit. Excavate trench walls vertically from trench bottom to 12 inches higher than top of pipe or conduit unless otherwise indicated.
   1. Clearance: 12 inches each side of pipe or conduit.
C. Trench Bottoms: Excavate and shape trench bottoms to provide uniform bearing and support of pipes and conduit. Shape subgrade to provide continuous support for bells, joints, and barrels of pipes and for joints, fittings, and bodies of conduits. Remove projecting stones and sharp objects along trench subgrade.
   1. For pipes and conduit less than 6 inches in nominal diameter, hand-excavate trench bottoms and support pipe and conduit on an undisturbed subgrade.
   2. For pipes and conduit 6 inches or larger in nominal diameter, shape bottom of trench to support bottom 90 degrees of pipe or conduit circumference. Fill depressions with tamped sand backfill.
   3. For flat-bottomed, multiple-duct conduit units, hand-excavate trench bottoms and support conduit on an undisturbed subgrade.
   4. Excavate trenches 6 inches deeper than elevation required in rock or other unyielding bearing material to allow for bedding course.

3.8 SUBGRADE INSPECTION

A. Notify Primary Designer when excavations have reached required subgrade.
B. If Primary Designer determines that unsatisfactory soil is present, continue excavation and replace with compacted backfill or fill material as directed.
C. Proof-roll subgrade below the building slabs and pavements with a pneumatic-tired and loaded 10-wheel, tandem-axle dump truck weighing not less than 15 tons to identify soft pockets and areas of excess yielding. Do not proof-roll wet or saturated subgrades.
   1. Completely proof-roll subgrade in 1 direction, repeating proof-rolling in direction perpendicular to first direction. Limit vehicle speed to 3 mph.
   2. Excavate soft spots, unsatisfactory soils, and areas of excessive pumping or rutting, as determined by Primary Designer, and replace with compacted backfill or fill as directed.

D. Authorized additional excavation and replacement material will be paid for according to Contract provisions for changes in the Work.
E. Reconstruct subgrades damaged by freezing temperatures, frost, rain, accumulated water, or construction activities, as directed by Primary Designer, without additional compensation.

3.9 UNAUTHORIZED EXCAVATION

A. Fill unauthorized excavation under foundations or wall footings by extending bottom elevation of concrete foundation or footing to excavation bottom, without altering top elevation. Lean concrete fill, with 28-day compressive strength of 2,500 psi, may be used when approved by Primary Designer.
   1. Fill unauthorized excavations under other construction, pipe, or conduit as directed by Primary Designer.

3.10 STORAGE OF SOIL MATERIALS

A. Stockpile borrow soil materials and excavated satisfactory soil materials without intermixing. Place, grade, and shape stockpiles to drain surface water. Cover to prevent windblown dust.
   1. Stockpile soil materials away from edge of excavations. Do not store within drip line of remaining trees.

3.11 BACKFILL

A. Place and compact backfill in excavations promptly, but not before completing the following:
   1. Construction below finish grade including, where applicable, subdrainage, dampproofing, waterproofing, and perimeter insulation.
   2. Surveying locations of underground utilities for Record Documents.
   3. Testing and inspecting underground utilities.
   4. Removing concrete formwork.
   5. Removing trash and debris.
   6. Removing temporary shoring, bracing, and sheeting.
   7. Installing permanent or temporary horizontal bracing on horizontally supported walls.
B. Place backfill on subgrades free of mud, frost, snow, or ice.

3.12 UTILITY TRENCH BACKFILL

A. Place backfill on subgrades free of mud, frost, snow, or ice.
B. Place and compact bedding course on trench bottoms and where indicated. Shape bedding course to provide continuous support for bells, joints, and barrels of pipes and for joints, fittings, and bodies of conduits.
C. Trenches under Footings: Backfill trenches excavated under footings and within 18 inches of bottom of footings with satisfactory soil; fill with concrete to elevation of bottom of footings. Concrete is specified in Section 03 30 00 "Cast-in-Place Concrete."

D. Trenches under Roadways: Provide 4-inch thick, concrete-base slab support for piping or conduit less than 30 inches below surface of roadways. After installing and testing, completely encase piping or conduit in a minimum of 4 inches of concrete before backfilling or placing roadway subbase course. Concrete is specified in Section 03 30 00 "Cast-in-Place Concrete."

E. Backfill voids with satisfactory soil while removing shoring and bracing.

F. Initial Backfill:

1. Soil Backfill: Place and compact initial backfill of satisfactory soil, free of particles larger than 1 inch in any dimension, to a height of 12 inches over the pipe or conduit.
    a. Carefully compact initial backfill under pipe haunches and compact evenly up on both sides and along the full length of piping or conduit to avoid damage or displacement of piping or conduit. Coordinate backfilling with utilities testing.
2. Controlled Low-Strength Material: Place initial backfill of controlled low-strength material to a height of 12 inches over the pipe or conduit. Coordinate backfilling with utilities testing.

G. Final Backfill:

1. Soil Backfill: Place and compact final backfill of satisfactory soil to final subgrade elevation.

H. Warning Tape: Install warning tape directly above utilities 12 inches below finished grade except 6 inches below subgrade under pavements and slabs.

3.13 SOIL FILL

A. Plow, scarify, bench, or break up sloped surfaces steeper than 1 vertical to 4 horizontal so fill material will bond with existing material.

B. Place and compact fill material in layers to required elevations as follows:

1. Under grass and planted areas, use satisfactory soil material.
2. Under walks and pavements, use satisfactory soil material.
3. Under steps and ramps, use engineered fill.
4. Under building slabs, use engineered fill.
5. Under footings and foundations, use engineered fill.

C. Place soil fill on subgrades free of mud, frost, snow, or ice.

3.14 SOIL MOISTURE CONTROL

A. Uniformly moisten or aerate subgrade and each subsequent fill or backfill soil layer before compaction to within 2 percent of optimum moisture content.

1. Do not place backfill or fill soil material on surfaces that are muddy, frozen, or contain frost or ice.
2. Remove and replace, or scarify and air dry, otherwise satisfactory soil material that exceeds optimum moisture content by 2 percent and is too wet to compact to specified dry unit weight.

3.15 COMPACTION OF SOIL BACKFILLS AND FILLS

A. Place backfill and fill soil materials in layers not more than 8 inches in loose depth for material compacted by heavy compaction equipment and not more than 4 inches in loose depth for material compacted by hand-operated tampers.

B. Place backfill and fill soil materials evenly on all sides of structures to required elevations and uniformly along the full length of each structure.

C. Compact soil materials to not less than the following percentages of maximum dry unit weight according to ASTM D698:

1. Under structures, building slabs, steps, and pavements, scarify and recompact top 12 inches of existing subgrade and each layer of backfill or fill soil material at 95 percent.
2. Under walkways, scarify and recompact top 6 inches below subgrade and compact each layer of backfill or fill soil material at 92 percent.
3. Under turf or unpaved areas, scarify and recompact top 6 inches below subgrade and compact each layer of backfill or fill soil material at 85 percent.
4. For utility trenches, compact each layer of initial and final backfill soil material at 85 percent.

3.16 GRADING

A. General: Uniformly grade areas to a smooth surface, free of irregular surface changes. Comply with compaction requirements and grade to cross sections, lines, and elevations indicated.

1. Provide a smooth transition between adjacent existing grades and new grades.
2. Cut out soft spots, fill low spots, and trim high spots to comply with required surface tolerances.

B. Site Rough Grading: Slope grades to direct water away from buildings and to prevent ponding. Finish subgrades to elevations required to achieve indicated finish elevations, within the following subgrade tolerances:

1. Turf or Unpaved Areas: Plus or minus 1 inch.
2. Walks: Plus or minus 1 inch.
3. Pavements: Plus or minus 1/2-inch.

C. Grading inside Building Lines: Finish subgrade to a tolerance of 1/2-inch when tested with a 10-foot straightedge.

3.17 SUBBASE AND BASE COURSES UNDER PAVEMENTS AND WALKS

A. Place subbase course and base course on subgrades free of mud, frost, snow, or ice.

B. On prepared subgrade, place subbase course and base course under pavements and walks as follows:

1. Place base course material over subbase course under hot-mix asphalt pavement.
2. Shape subbase course and base course to required crown elevations and cross-slope grades.
3. Place subbase course and base course 6 inches or less in compacted thickness in a single layer.
4. Place subbase course and base course that exceeds 6 inches in compacted thickness in layers of equal thickness with no compacted layer more than 6 inches thick or less than 3 inches thick.

C. Pavement Shoulders: Place shoulders along edges of subbase course and base course to prevent lateral movement. Construct shoulders, at least 12 inches wide of satisfactory soil materials and compact simultaneously with each subbase and base layer to not less than 95 percent of maximum dry unit weight according to ASTM D698.

3.18 FIELD QUALITY CONTROL

A. Testing Agency: Owner will engage a qualified geotechnical engineering testing agency to perform tests and inspections.

B. Allow testing agency to inspect and test subgrades and each fill or backfill layer. Proceed with subsequent earth moving only after test results for previously completed Work comply with requirements.

C. Footing Subgrade: At footing subgrades, at least 1 test of each soil stratum will be performed to verify design bearing capacities. Subsequent verification and approval of other footing subgrades may be based on a visual comparison of subgrade with tested subgrade when approved by Primary Designer.

D. Testing agency will test compaction of soils in place according to ASTM D1556, ASTM D2167, ASTM D2937, and ASTM D6938, as applicable. Tests will be performed at the following locations and frequencies:

1. Paved and Building Slab Areas: At subgrade and at each compacted fill and backfill layer, at least 1 test for every 2,000 sq. ft. or less of paved area or building slab but in no case fewer than 3 tests.
2. Foundation Wall Backfill: At each compacted backfill layer, at least 1 test for every 100 feet or less of wall length but no fewer than 2 tests.
3. Trench Backfill: At each compacted initial and final backfill layer, at least 1 test for every 150 feet or less of trench length but no fewer than 2 tests.

E. When testing agency reports that subgrades, fills, or backfills have not achieved degree of compaction specified, scarify and moisten or aerate, or remove and replace soil materials to depth required; recompact and retest until specified compaction is obtained.

3.19 PROTECTION

A. Protecting Graded Areas: Protect newly graded areas from traffic, freezing, and erosion. Keep free of trash and debris.

B. Repair and reestablish grades to specified tolerances where completed or partially completed surfaces become eroded, rutted, settled, or where they lose compaction due to subsequent construction operations or weather conditions.

1. Scarify or remove and replace soil material to depth as directed by Primary Designer; reshape and recompact.

C. Where settling occurs before Project correction period elapses, remove finished surfacing, backfill with additional soil material, compact, and reconstruct surfacing.

1. Restore appearance, quality, and condition of finished surfacing to match adjacent Work, and eliminate evidence of restoration to greatest extent possible.

3.20 DISPOSAL OF SURPLUS AND WASTE MATERIALS

A. Remove surplus satisfactory soil and waste materials, including unsatisfactory soil, trash, and debris, and legally dispose of them off Owner's property.

END OF SECTION

SECTION 31 22 13 - ROUGH GRADING

PART 1 - GENERAL

1.1 SUMMARY

A. Section Includes:
   1. Excavating topsoil.
   2. Excavating subsoil.
   3. Cutting, grading, filling, rough contouring, and compacting site for site structures and building pads.

B. Related Sections:
   1. Division 10 Specification Sections apply to Work of this Section.
   2. Section 31 05 13 "Soils for Earthwork" for fill.
   3. Section 31 10 00 "Site Clearing" for excavating topsoil.
   4. Section 31 23 23 "Fill" for general building area backfilling.

1.2 REFERENCES

A. ASTM International:
   1. ASTM C136 - Standard Test Method for Sieve Analysis of Fine and Coarse Aggregates.
   2. ASTM D698 - Standard Test Method for Laboratory Compaction Characteristics of Soil Using Standard Effort (12,400 ft-lbf/ft3 (600 kN-m/m3).
   3. ASTM D1556 - Standard Test Method for Density and Unit Weight of Soil in Place by the Sand-Cone Method.
   4. ASTM D1557 - Standard Test Methods for Laboratory Compaction Characteristics of Soil Using Modified Effort (56,000 ft-lbf/ft3 (2,700 kN-m/m3).
   5. ASTM D2167 - Standard Test Method for Density and Unit Weight of Soil in Place by the Rubber Balloon Method.
   6. ASTM D2419 - Standard Test Method for Sand Equivalent Value of Soils and Fine Aggregate.
   7. ASTM D2434 - Standard Test Method for Permeability of Granular Soils (Constant Head).
   8. ASTM D2922 - Standard Test Method for Density of Soil and Soil-Aggregate in Place by Nuclear Methods (Shallow Depth).
   9. ASTM D3017 - Standard Test Method for Water Content of Soil and Rock in Place by Nuclear Methods (Shallow Depth).

1.3 SUBMITTALS

A. Section 01 33 00 "Submittal Procedures."
B. Samples: Submit, in air-tight containers, 10-pound sample of each type of fill to testing laboratory.
C. Materials Source: Submit name of imported materials suppliers.
D. Manufacturer's Certificate: Certify Products meet or exceed specified requirements.

1.4 SUSTAINABLE DESIGN SUBMITTALS

A. Section 01 81 13 "Sustainable Design Requirements" for sustainable design submittals.
B. Manufacturer's Certificate: Certify products meet or exceed specified sustainable design requirements.

1.5 CLOSEOUT SUBMITTALS

A. Section 01 70 00 "Execution and Closeout Requirements" for requirements for submittals.
B. Project Record Documents: Accurately record actual locations of utilities remaining by horizontal dimensions, elevations or inverts, and slope gradients.

1.6 QUALITY ASSURANCE

A. Perform Work in accordance with ASTM C136, ASTM D2419, and ASTM D2434.
B. Perform Work in accordance with Highways standard.

PART 2 - PRODUCTS

2.1 SUSTAINABILITY CHARACTERISTICS

A. Section 01 81 13 "Sustainable Design Requirements" for sustainable design compliance.

2.2 MATERIALS

A. Topsoil: Type S3 as specified in Section 31 05 13 "Soils for Earthwork."
B. Subsoil Fill: Type as specified in Section 31 05 13. "Soils for Earthwork."
C. Structural Fill: Type as specified in Section 31 05 13. "Soils for Earthwork."

PART 3 - EXECUTION

3.1 EXAMINATION

A. Section 01 30 00 "Administrative Requirements" for verification of existing conditions before starting work.
B. Verify survey benchmark and intended elevations for Work are as indicated on Drawings.

3.2 PREPARATION

A. Call Local Utility Line Information service not less than 3 working days before performing Work.
    1. Request underground utilities to be located and marked within and surrounding construction areas.
B. Identify required lines, levels, contours, and datum.
C. Notify utility company to remove and relocate utilities.
D. Protect utilities indicated to remain from damage.

E. Protect plant life, lawns, rock outcropping, and other features remaining as portion of final landscaping.
F. Protect bench marks, sidewalks, paving, and curbs from excavating equipment and vehicular traffic.

3.3 SUBSOIL EXCAVATION

A. Excavate subsoil from areas to be further excavated, relandscaped, or regraded.
B. Do not excavate wet subsoil or excavate and process wet material to obtain optimum moisture content.
C. When excavating through roots, perform Work by hand and cut roots with sharp axe.
D. Remove excess subsoil not intended for reuse from site.
E. Stockpile subsoil in area designated on site to depth not exceeding 8 feet and protect from erosion.
F. Benching Slopes: Horizontally bench existing slopes greater than 1:4 to key placed fill material to slope to provide firm bearing.
G. Stability: Replace damaged or displaced subsoil as specified for fill.

3.4 FILLING

A. Fill areas to contours and elevations with unfrozen materials.
B. Install Work in accordance with Highways standards.

3.5 TOLERANCES

A. Section 01 40 00 "Quality Requirements" for tolerances.
B. Top Surface of Subgrade: Plus or minus 1/10-foot from required elevation.

3.6 FIELD QUALITY CONTROL

A. Section 01 40 00 "Quality Requirements" for field inspecting, testing, adjusting, and balancing.
B. Perform laboratory material tests in accordance with ASTM D1557.
C. Perform in place compaction tests in accordance with the following:
    1. Density Tests: ASTM D2922.
    2. Moisture Tests: ASTM D3017.
D. When tests indicate Work does not meet specified requirements, remove Work, replace and retest.
    1. Paved and Building Slab Areas: At subgrade and at each compacted fill and backfill layer, at least one test for every 2,000 square feet or less of paved area or building slab, but in no case fewer than three tests.
    2. Foundation Walk Backfill: At each compacted backfill layer, at least one test for every 100 feet or less of wall length, but no fewer than two tests.
    3. Trench Backfill: At each compacted initial and final backfill layer, at least one tesst for every 150 feet or less of trench length but no fewer than two tests.

END OF SECTION

SECTION 31 23 23 - FILL

PART 1 - GENERAL

1.1 SUMMARY

A. Section Includes:
   1. Backfilling building perimeter to subgrade elevations.
   2. Backfilling site structures to subgrade elevations.
   3. Fill under slabs on grade.
   4. Fill under paving.
   5. Fill for over-excavation.

B. Related Requirements:
   1. Division 01 Specification Sections apply to Work of this Section.
   2. Section 03 30 00 "Cast-in-Place Concrete" for concrete materials.
   3. Section 31 05 13 "Soils for Earthwork" for soils for fill.
   4. Section 31 22 13 "Rough Grading" for Site filling.

1.2 REFERENCE STANDARDS

A. American Association of State Highway and Transportation Officials:
   1. AASHTO T 180 - Standard Method of Test for Moisture-Density Relations of Soils Using a 4.54-kg Rammer and a 457-mm Drop.

B. ASTM International:
   1. ASTM D698 - Standard Test Methods for Laboratory Compaction Characteristics of Soil Using Standard Effort (12,400 ft-lbf/ft3).
   2. ASTM D1556 - Standard Test Method for Density and Unit Weight of Soil in Place by Sand-Cone Method.
   3. ASTM D1557 - Standard Test Methods for Laboratory Compaction Characteristics of Soil Using Modified Effort (56,000 ft-lbf/ft3).
   4. ASTM D2167 - Standard Test Method for Density and Unit Weight of Soil in Place by the Rubber Balloon Method.
   5. ASTM D6031 - Standard Test Method for Logging In Situ Moisture Content and Density of Soil and Rock by the Nuclear Method in Horizontal, Slanted, and Vertical Access Tubes.
   6. ASTM D6938 - Standard Test Method for In-Place Density and Water Content of Soil and Soil-Aggregate by Nuclear Methods (Shallow Depth).

PART 2 - PRODUCTS (Not Used)

PART 3 - EXECUTION

3.1 EXAMINATION

A. Section 01 70 00 "Execution and Closeout Requirements" for installation examination.
B. Verify that subdrainage, dampproofing, and waterproofing installations have been inspected.

C. Verify that underground tanks are anchored to their own foundations to avoid flotation after backfilling.
D. Verify structural integrity of unsupported walls to support loads imposed by fill.

3.2 PREPARATION

A. Section 01 70 00 "Execution and Closeout Requirements" for installation preparation.
B. Compact subgrade to specified density requirements for subsequent backfill materials.
C. Soft Subgrade:
   1. Cut out soft areas of subgrade not capable of compaction in place.
   2. Backfill with structural fill and compact to density equal to or greater than specified requirements for subsequent fill material.
D. Scarify subgrade surface to depth of 6 inches.

3.3 BACKFILLING

A. Backfill areas to contours and elevations.
B. Systematically backfill to allow maximum time for natural settlement.
C. Do not backfill over porous, wet, frozen, or spongy subgrade surfaces and do not backfill with frozen materials.
D. Place fill material in continuous layers and compact.
E. Use placement method that does not disturb or damage utilities in trench.
F. Maintain optimum moisture content of fill materials to attain required compaction density.
G. Structures:
   1. Backfill against supported foundation walls.
   2. Backfill simultaneously on each side of unsupported foundation walls until supports are in place.
   3. Slope grade away from building minimum 2 percent slope for minimum distance of 10 feet.
H. Make gradual grade changes and blend slope into level areas.
I. Remove surplus backfill materials from Site.
J. Leave fill material stockpile areas free of excess fill materials.

3.4 TOLERANCES

A. Section 01 40 00 "Quality Requirements" for tolerances.
B. Top Surface of Backfilling within Building Areas: Plus or minus 1 inch from required elevations.
C. Top Surface of Backfilling under Paved Areas: Plus or minus 1 inch from required elevations.
D. Top Surface of General Backfilling: Plus or minus 1 inch from required elevations.

3.5 PROTECTION

A. Section 01 70 00 "Execution and Closeout Requirements" for protecting finished Work.
B. Reshape and recompact fills subjected to vehicular traffic during construction.

END OF SECTION

SECTION 32 11 23 - AGGREGATE BASE COURSES

PART 1 - GENERAL

1.1 SUMMARY

A. Section Includes:
   1. Aggregate subbase.
   2. Aggregate base course.

B. Related Sections:
   1. Division 01 Specification Sections apply to Work of this Section.
   2. Section 31 22 13 "Rough Grading" for preparation of site for base course.
   3. Section 32 05 16 "Aggregates for Exterior Improvements."
   4. Section 32 12 16 "Asphalt Paving:" Finish asphalt courses.

1.2 REFERENCES

A. American Association of State Highway and Transportation Officials:
   1. AASHTO M288 - Standard Specification for Geotextile Specification for Highway Applications.

B. ASTM International:
   1. ASTM D1556 - Standard Test Method for Density and Unit Weight of Soil in Place by the Sand-Cone Method.
   2. ASTM D2167 - Standard Test Method for Density and Unit Weight of Soil in Place by the Rubber Balloon Method.
   3. ASTM D2922 - Standard Test Method for Density of Soil and Soil-Aggregate in Place by Nuclear Methods (Shallow Depth).
   4. ASTM D2940 - Standard Specification for Graded Aggregate Material For Bases or Subbases for Highways or Airports.
   5. ASTM D3017 - Standard Test Method for Water Content of Soil and Rock in Place by Nuclear Methods (Shallow Depth).

1.3 SUBMITTALS

A. Section 01 33 00 "Submittal Procedures."

B. Product Data:
   1. Submit data for geotextile fabric and herbicide.

C. Samples: Submit, in air-tight containers, 10-pound sample of each type of aggregate fill to testing laboratory.

D. Materials Source: Submit name of aggregate materials suppliers.

E. Manufacturer's Certificate: Certify products meet or exceed specified requirements.

1.4 QUALITY ASSURANCE

A. Furnish each aggregate material from single source throughout the Work.

B. Perform Work according to State of Texas Highways standards.

C. Maintain 1 copy of each document on site.

PART 2 - PRODUCTS

2.1 AGGREGATE MATERIALS

A. Conform with requirementss of Type A, Grades 1 or 2, Item 247 of the TxDOT Standard Specifications for Construction of Highways, Street, and Bridges.

PART 3 - EXECUTION

3.1 EXAMINATION

A. Section 01 30 00 "Administrative Requirements" for verification of existing conditions before starting Work.
B. Verify compacted substrate is dry.
   1. Proof roll substrate with in minimum 3 perpendicular passes to identify soft spots.
   2. Remove soft substrate and replace with compacted fill as specified in Section 31 23 23 "Fill."
C. Verify substrate has been inspected, gradients and elevations are correct.

3.2 PREPARATION

A. Correct irregularities in substrate gradient and elevation by scarifying, reshaping, and re-compacting.
B. Do not place fill on soft, muddy, or frozen surfaces.

3.3 AGGREGATE PLACEMENT

A. Spread aggregate over prepared substrate to total compacted thickness indicated on Drawings.
B. Roller compact aggregate to 95 percent maximum density.
C. Level and contour surfaces to elevations, profiles, and gradients indicated.
D. Add small quantities of fine aggregate to coarse aggregate when required to assist compaction.
E. Maintain optimum moisture content of fill materials to attain specified compaction density.
F. Use mechanical tamping equipment in areas inaccessible to compaction equipment.

3.4 TOLERANCES

A. Section 01 40 00 "Quality Requirements" for tolerances.
B. Maximum Variation From Flat Surface: 1/2-inch measured with 10-foot straight edge.
C. Maximum Variation From Thickness: 1/4-inch.
D. Maximum Variation From Elevation: 1/2-inch.

3.5 FIELD QUALITY CONTROL

A. Section 01 70 00 "Execution and Closeout Requirements" for field inspecting, testing, adjusting, and balancing.
B. Compaction testing will be performed according to ASTM D1557.

C. When tests indicate Work does not meet specified requirements, remove Work, replace and retest.

D. Frequency of Tests: One test for every 1,000 square yards of each layer compacted aggregate.

3.6 COMPACTION

A. Compact materials to 98 percent of maximum density as determined from test strip, according to ASTM D2940.

END OF SECTION

SECTION 32 12 16 - ASPHALT PAVING

PART 1 - GENERAL

1.1 SUMMARY

A. Section Includes:
   1. Asphalt materials.
   2. Aggregate materials.
   3. Aggregate subbase.
   4. Asphalt paving base course, binder course, and wearing course.
   5. Asphalt paving overlay for existing paving.
   6. Surface slurry.

B. Related Requirement:
   1. Division 01 Specification Sections apply to Work of this Section.
   2. Section 31 22 13 "Rough Grading" for preparation of site for paving.
   3. Section 32 05 16 "Aggregates for Exterior Improvements" for product requirements for aggregate for placement by this Section.
   4. Section 32 11 23 "Aggregate Base Courses" for compacted subbase for paving.

1.2 REFERENCE STANDARDS

A. AASHTO M17 - Standard Specification for Mineral Filler for Bituminous Paving Mixtures.
B. AASHTO M29 - Standard Specification for Fine Aggregate for Bituminous Paving Mixtures.
C. AASHTO M140 - Standard Specification for Emulsified Asphalt.
D. AASHTO M208 - Standard Specification for Cationic Emulsified Asphalt.
E. AASHTO M288 - Standard Specification for Geotextile Specification for Highway Applications.
F. AASHTO M320 - Standard Specification for Performance-Graded Asphalt Binder.
G. AASHTO M324 - Standard Specification for Joint and Crack Sealants, Hot Applied, for Concrete and Asphalt Pavements.
H. AASHTO MP1a - Standard Specification for Performance-Graded Asphalt Binder.
I. AI MS-2 - Mix Design Methods for Asphalt Concrete and Other Hot- Mix Types.
J. AI MS-19 - Basic Asphalt Emulsion Manual.
K. AI SP-2 - Superpave Mix Design.
L. ASTM C1371-2004a - Standard Test Method for Determination of Emittance of Materials Near Room Temperature Using Portable Emissometers.
M. ASTM C1549-16 - Standard Test Method for Determination of Solar Reflectance Near Ambient Temperature Using a Portable Solar Reflectometer.
N. ASTM D242 - Standard Specification for Mineral Filler For Bituminous Paving Mixtures.
O. ASTM D692 - Standard Specification for Coarse Aggregate for Bituminous Paving Mixtures.
P. ASTM D946 - Standard Specification for Penetration-Graded Asphalt Cement for Use in Pavement Construction.
Q. ASTM D977 - Standard Specification for Emulsified Asphalt.
R. ASTM D1073 - Standard Specification for Fine Aggregate for Bituminous Paving Mixtures.

S. ASTM D1188 - Standard Test Method for Bulk Specific Gravity and Density of Compacted Bituminous Mixtures Using Coated Samples
T. ASTM D2027 - Standard Specification for Cutback Asphalt (Medium-Curing Type).
U. ASTM D2397 - Standard Specification for Cationic Emulsified Asphalt.
V. ASTM D2726 - Standard Test Method for Bulk Specific Gravity and Density of Non-Absorptive Compacted Bituminous Mixtures.
W. ASTM D2950 - Standard Test Method for Density of Bituminous Concrete in Place by Nuclear Methods.
X. ASTM D3381 - Standard Specification for Viscosity-Graded Asphalt Cement for Use in Pavement Construction.
Y. ASTM D3515 - Standard Specification for Hot-Mixed, Hot-Laid Bituminous Paving Mixtures.
Z. ASTM D3549 - Standard Test Method for Thickness or Height of Compacted Bituminous Paving Mixture Specimens.
AA. ASTM D3910 - Standard Practices for Design, Testing, and Construction of Slurry Seal.
BB. ASTM D6690 - Standard Specification for Joint and Crack Sealants, Hot Applied, for Concrete and Asphalt Pavements.
CC. ASTM E408-2019 - Standard Test Methods for Total Normal Emittance of Surfaces Using Inspection-Meter Techniques.
DD. ASTM E903-2012 - Standard Test Method for Solar Absorptance, Reflectance, and Transmittance of Materials Using Integrating Spheres.
EE. ASTM E1918-2016 - Standard Test Method for Measuring Solar Reflectance of Horizontal and Low-Sloped Surfaces in the Field.
FF. ASTM E1980-2019 - Standard Practice for Calculating Solar Reflectance Index of Horizontal and Low-Sloped Opaque Surfaces.
GG. Texas Department of Transportation (TxDOT) Standard Specifications for Construction of Highways, Streets, and Bridges, 2014 edition.

1.3 SUBMITTALS

A. Section 01 33 00 "Submittal Procedures."
B. Product Data:
   1. Submit product information for asphalt and aggregate materials.
   2. Submit mix design with laboratory test results supporting design.
C. Manufacturer's Certificate: Certify Products meet or exceed specified requirements.

1.4 QUALITY ASSURANCE

A. Mixing Plant: Conform to State of Texas Highways standard.

1.5 QUALIFICATIONS

A. Installer: Company specializing in performing work of this Section with minimum 5 years' documented experience.

1.6 AMBIENT CONDITIONS

A. Section 01 50 00 "Temporary Facilities and Controls" for ambient conditions control facilities for product storage and installation.
B. Do not place asphalt mixture between November 1 and March 1.
C. Do not place asphalt mixture when ambient air or base surface temperature is less than 40 degrees F, or surface is wet or frozen.
D. Place asphalt mixture when temperature is not more than 15 degrees F less than initial mixing temperature.

PART 2 - PRODUCTS

2.1 ASPHALT PAVING

A. Performance / Design Criteria:
   1. Paving: Design for movement of trucks up to 30,000 pounds.
B. Asphalt Materials:
   1. Asphalt Binder: In accordance with State of Texas Highways standards.
   2. Primer: ASTM D2027, MC-70; medium curing, cutback asphalt. In accordance with State of Texas Highways standards.
   3. Tack Coat: In accordance with State of Texas Highways standards.
   4. Reclaimed Asphalt Pavement (RAP): Processed material obtained by milling or full depth removal of existing asphalt paving.
   5. Oil: In accordance with Municipality of Highways standards.
C. Aggregate Materials:
   1. Coarse Aggregate: In accordance with State of TexasHighways standards.
   2. Fine Aggregate: ASTM D1073; natural sand or sand manufactured from stone, gravel, or blast furnace slag.
D. Aggregate Subbase: Specified in Section 32 11 23 "Aggregate Base Courses."

2.2 MIXES

A. Use dry material to avoid foaming. Mix uniformly.
B. Asphalt Paving Mixtures: Designed in accordance with State of Texas Highways standards with maximum 5 percent by weight reclaimed asphalt pavement.
   1. Base Course: Type A, Grades 1 or 2 of Item 24o7 of the TxDOT Standard Specifications for Construction of Highways, Street, and Bridges..
   2. Surface Course.

2.3 ACCESSORIES

A. Geotextile Fabric: AASHTO M288; non-woven, polypropylene.
B. Sealant: ASTM D6690, Type I; hot applied type.

2.4 SOURCE QUALITY CONTROL

A. Section 01 40 00 "Quality Requirements" for testing, inspection and analysis requirements.
B. Submit proposed mix design of each class of mix for review prior to beginning of Work.
C. Test samples in accordance with AI MS-2.

PART 3 - EXECUTION

3.1 EXAMINATION

A. Section 01 70 00 "Execution and Closeout Requirements:" Requirements for installation examination.
B. Verify utilities indicated under paving are installed with excavations and trenches backfilled and compacted.
C. Verify compacted subgrade subbase is dry.
   1. Proof roll subbase with in minimum 2 perpendicular passes to identify soft spots.
   2. Remove soft subbase and replace with compacted fill as specified in Section 31 23 23.
D. Verify gradients and elevations of base are correct.

3.2 PREPARATION

A. Prepare subbase in accordance with State of Texas Highways standards. TxDOT Standard Specifications of Construction of Highways, Streets, and Bridges.

3.3 INSTALLATION

A. Subbase:
   1. Aggregate Subbase: Install as specified in Section 32 11 23 "Aggregate Base Courses."
   2. Prepare subbase in accordance with State of Texas Highways standards.
B. Primer:
   1. Apply primer in accordance with AI MS-2. State of Texas Highways standards.
C. Tack Coat:
   1. Apply tack coat in accordance with AI State oof Texas Highways standards.
D. Single Course Asphalt Paving:
   1. Install Work in accordance with State of Texas Highways standards.
   2. Place asphalt within 24 hours of applying primer or tack coat.
   3. Place asphalt wearing course to thickness indicated on Drawings.
   4. Compact paving by rolling to specified density. Do not displace or extrude paving from position. Hand compact in areas inaccessible to rolling equipment.
   5. Perform rolling with consecutive passes to achieve even and smooth finish without roller marks.
E. Double Course Asphalt Paving:
   1. Place asphalt binder course within 24 hours of applying primer or tack coat.
   2. Place binder course to thickness indicated on Drawings.
   3. Place wearing course within 24 hours of placing and compacting binder course. When binder course is placed more than 24 hours before placing wearing course, clean surface and apply tack coat before placing wearing course.
   4. Place wearing course to thickness indicated on Drawings.
   5. Compact each course by rolling to specified density. Do not displace or extrude paving from position. Hand compact in areas inaccessible to rolling equipment.
   6. Perform rolling with consecutive passes to achieve even and smooth finish, without roller marks.

F. Surface Slurry:
   1. Install uniform thickness surface slurry over existing paving in accordance with ASTM D3910.
G. Allow slurry to cure.
   1. Roll paving to achieve uniform surface.

3.4 TOLERANCES

A. Section 01 40 00 "Quality Requirements."
B. Flatness: Maximum variation of 1/4-inch measured with 10-foot straight edge.
C. Scheduled Compacted Thickness: Within 1/4-inch.
D. Variation from Indicated Elevation: Within 1/2-inch.

3.5 FIELD QUALITY CONTROL

A. Take samples and perform tests including mat density tests in accordance with State of TexasHighways standards.
B. Asphalt Paving Mix Temperature: Measure temperature at time of placement.
C. Asphalt Paving Thickness: ASTM D3549; test one core sample from every 1,000 square yards compacted paving.
D. Asphalt Paving Density: ASTM D1188 or ASTM D2726; test 1 core sample from every 1,000 square yards compacted paving.

3.6 PROTECTION

A. Section 01 70 00 "Execution and Closeout Requirements" for protecting finished Work.
B. Immediately after placement, protect paving from mechanical injury for 8 hours or until surface temperature is less than 140 degrees F.

END OF SECTION

SECTION 32 13 13 - CONCRETE PAVING

PART 1 - GENERAL

1.1 SUMMARY

A. Section Includes concrete pavement, curb and gutter.
B. Section Applies:
   1. Where Contractor elects to remove, or required to remove, and replace concrete pavement, curb and gutter, driveway (alleys), and sidewalks.
   2. For repair or replacing facilities otherwise damaged by Contractor operations.
C. Related Requirements:
   1. Division 01 Specification Sections apply to Work of this Section.
   2. Section 03 30 00 "Cast-in-Place Concrete."
   3. Section 32 12 16 "Asphalt Paving."
   4. Section 32 13 73 "Concrete Paving Joint Sealants."

1.2 DEFINITIONS

A. Cementitious Materials: Portland cement alone or in combination with one or more of blended hydraulic cement, expansive hydraulic cement, fly ash and other pozzolans, ground granulated blast-furnace slag, and silica fume.
B. TxDOT: Texas Department of Transportation "Standard Specifications for Construction and Maintenance of Highways, Streets, and Bridges" 2014.
C. DMS: TxDOT Department of Material Specifications.

1.3 SUBMITTALS

A. Submit product data per Section 01 33 00 "Submittal Procedures."
B. Product Data: For each type of manufactured material and product indicated.
C. Design Mixes: For each concrete pavement mix. Include alternate mix designs when characteristics of materials, project conditions, weather, test results, or other circumstances warrant adjustments. Design shall indicate target unit weight of mix. Mix design shall not be in excess of 30 days old without Engineer approval.
D. Design mix submittals shall include:
   1. Fine aggregate gradation.
   2. Course aggregate gradation.
   3. Loss from five-cycle magnesium sulfate or sodium sulfate test on all aggregate.
   4. Cement content.
   5. Fly ash content.
   6. Water content.
   7. All admixtures.
   8. Maximum slump.
   9. Percent air entrainment.
   10. Seven-day flexural strength.
   11. Seven-day compressive strength.
   12. 28-day compressive strength.

E. Material Test Reports: From a qualified testing agency indicating and interpreting test results for compliance of the following with requirements indicated, based on flexural and comprehensive testing of current materials:
   1. Cementitious materials and aggregates.
   2. Steel reinforcement and reinforcement accessories.
   3. Fiber reinforcement.
   4. Admixtures.
   5. Curing compounds.
   6. Applied finish materials.
   7. Bonding agent or adhesive.
   8. Joint fillers.

F. Paving and Quality Control Plan (PQCP): Submit a PQCP for approval before beginning pavement construction operations. Include details of all operations in concrete paving process, including longitudinal construction joint layout, sequencing, curing, lighting, early opening, leave-outs, sawing, inspection, testing, construction methods, other details and description of all equipment. List certified personnel performing testing. Submit revisions to PQCP for approval.

1.4 QUALITY ASSURANCE

A. Installer Qualifications: Experienced installer who completed pavement Work similar in material, design, and extent to that indicated for Project and whose Work resulted in construction with a record of successful in-service performance.

B. Manufacturer Qualifications: Manufacturer of ready-mixed concrete products complying with ASTM C94 requirements for production facilities and equipment.
   1. Manufacturer must be certified per National Ready-Mix Concrete Association's Plant Certification Program.
   2. Inspection report signed and sealed by a licensed professional engineer showing concrete measuring, mixing, and delivery equipment meets all requirements of ASTM C94. New certification or signed/sealed report required every time plant is moved. Provide copy of certification or signed/sealed inspection report to Engineer.
   3. When equipment or facilities fail to meet specification requirements, remove from service until corrected.

C. Testing Agency Qualifications: Independent testing agency, acceptable to authorities having jurisdiction.

D. Source Limitations: Obtain each type or class of cementitious material of same brand from same manufacturer's plant and each aggregate from one source. For changes in material, brand, source, or chemical admixtures, reevaluate mix as a new mix design.

E. ACI Publications: Comply with ACI 301, "Specification for Structural Concrete," unless modified by Contract Document requirements. Refer to Section 03 30 00 "Cast-In-Place Concrete," for additional codes and standards.

F. Concrete Testing Service: Engage a qualified independent testing agency to perform material evaluation tests and design concrete mixes.

1.5 PROJECT CONDITIONS

A. Traffic Control: Maintain access for vehicular and pedestrian traffic as required for other construction activities and emergency services.

PART 2 - PRODUCTS

2.1 FORMS

A. Pavement Forms: Provide metal side forms of sufficient cross section, strength and rigidity to support paving equipment and resist impact and vibration of operation without visible springing or settlement. Use forms free from kinks, bonds, or warps that affect ride quality or alignment.
   1. Use flexible or curved forms for curves of a radius 100 feet or less.
   2. Forms should be no less than 10 feet in length.

2.2 PLACING, CONSOLIDATING, AND FINISHING EQUIPMENT

A. Provide approved self-propelled paving equipment to uniformly distribute concrete with minimal segregation and provide a smooth machine-finished consolidated concrete pavement conforming to plan line and grade. Provide approved automatic grade control system on slip-forming equipment. Provide approved mechanically-operated finishing floats to produce a uniformly-smooth pavement surface. Provide equipment to provide fine, light-water fog mist.

B. Provide mechanically-operated vibratory equipment to adequately consolidate concrete. Provide immersion vibrators on paving equipment at sufficiently close intervals to provide uniform vibration and consolidation of concrete over entire width and depth of pavement per manufacturer recommendations. Provide immersion vibrator units to operate at least 8,000 cycles per minute frequency in air. Provide enough hand-operated immersion vibrators for timely and proper consolidation of concrete along forms, at joints, and areas not covered by other vibratory equipment. Surface vibrators may be used to supplement equipment-mounted immersion vibrators. Provide tachometers to verify proper operation of all vibrators.

C. For small/irregular areas or when approved, paving equipment described herein not required.

2.3 REINFORCING STEEL INSERTING EQUIPMENT

A. Inserting equipment may not be used in place of two-piece tie bars or drilled and epoxy bars.

2.4 TEXTURING EQUIPMENT

A. Carpet Drag. Provide carpet drag mounted on Work bridge or moveable support system. Provide single piece of carpet of sufficient transverse length to span full width of pavement placed and adjustable so a sufficient longitudinal length of carpet is in contact with concrete placed to produce desired texture. Obtain approval to vary length and width of carpet to accommodate specific applications. Use artificial grass-type carpet with molded polyethylene pile face with a 5/8- to 1-inch blade length, minimum 70-ounce-per-square-yard weight, and strong, durable, rot-resistant backing material bonded to facing.

B. Tining Equipment. Provide self-propelled transverse metal tine device equipped with 4- to 6-inch steel tines and with cross-section approximately 1/32-inch thick by 1/12-inch wide, spaced at 1 inch center-to-center. Only use hand-operated tining equipment to produce equivalent texture on small or irregularly-shaped areas or, when permitted, in emergencies due to equipment breakdown.

2.5 CURING EQUIPMENT

A. Provide self-propelled machine for applying membrane curing compound using mechanically-pressurized spraying equipment with atomizing nozzles. Provide equipment and controls to maintain required uniform rate of application over entire paving area. Provide curing equipment independent of all other equipment when production rates are so the first application of membrane curing compound cannot be accomplished immediately after texturing and after free moisture disappears. Only use hand-operated pressurized spraying equipment with atomizing nozzles on small or irregular areas or, when permitted, in emergencies due to equipment breakdown.

2.6 SAWING EQUIPMENT

A. Provide power-driven concrete saws to saw joints shown on Plans. Provide standby power-driven concrete saws during concrete sawing operations. Provide adequate illumination for nighttime sawing.

2.7 GRINDING EQUIPMENT

A. When required, provide self-propelled powered grinding equipment specifically designed to smooth and texture concrete pavement using circular diamond blades. Provide equipment with automatic grade control to grind at least a 3-foot-width longitudinally in each pass without damaging concrete.

2.8 TESTING EQUIPMENT

A. Provide testing equipment regardless of job-control testing responsibilities per TxDOT Item 421, "Hydraulic Cement Concrete," unless otherwise shown in Plans or specified.

2.9 CORING EQUIPMENT

A. When required, provide coring equipment to extract cores per requirements of Tex-424-A.

2.10 MISCELLANEOUS EQUIPMENT

A. Furnish both 10- and 15-foot steel or magnesium long-handled standard straightedges. Furnish enough Work bridges, long enough to span pavement, for finishing and inspection operations. Furnish date stencils to impress pavement placement dates into fresh concrete, with numerals approximately 2 inches high by 1 inch wide by 1/4-inch deep.

2.11 STEEL REINFORCEMENT

A. Plain-Steel Welded Wire Fabric: ASTM A185, fabricated from as-drawn steel wire into flat sheets, shall be 6- by 6-inch, 10-gauge welded wire fabric, or as shown on Plans.
B. Reinforcement Bars: ASTM A615, Grade 60, deformed.

C. Joint Dowel Bars: Plain steel bars, ASTM A615, Grade 60. Cut bars true to length with ends square and free of burrs.

D. Tie Bars: ASTM A615, Grade 60, deformed.

E. Hook Bolts: ASTM A307, Grade A, internally and externally threaded. Design hook-bolt joint assembly to hold coupling against pavement form and in position during concreting operations, and permit removal without damage to concrete or hook bolt.

F. Bar Supports: Bolsters, chairs, spacers, and other devices for spacing, supporting, and fastening reinforcement bars, welded-wire fabric, and dowels in place. Manufacture bar supports per CRSI "Manual of Standard Practice," from steel wire, plastic, or precast concrete or fiber-reinforced concrete of greater compressive strength than concrete, and:
   1. Equip wire bar supports with sand plates or horizontal runners where base material will not support chair legs.
   2. Space reinforcing supports at 5-foot maximum in any direction.
   3. Place vertical reinforcement supports drilled into sub-base material to prevent horizontal movement of reinforcing steel.

2.12 CONCRETE MATERIALS

A. Use same brand and type of cementitious material from same manufacturer throughout Project.

B. Portland Cement: ASTM C150, Types I, II, or III or ASTM G176 IA, IIA, or IIIA for air entrained. Fly ash may be substituted at up to a 30 percent rate by absolute volume of cement. Portland cement concrete should have minimum seven-day compressive strength of 3,500 psi or minimum 28-day compressive strength of 4,400 psi. Concrete material should comply with TXDOT Standard Specifications 2014, Item 360.

C. Aggregate: ASTM C33, uniformly graded, from a single source, as follows:
   1. Class: 4M.
   2. Maximum Aggregate Size: 1-1/2 inches nominal.
   3. Coarse aggregate for Class C or D concrete shall be crushed limestone (Brownwood type or equivalent). Aggregate shall be graded fine-to-coarse and conform to ASTM C136. Gradation for aggregate shall meet these requirements by weight:

FINE AGGREGATE		COARSE AGGREGATE	
Sieve	Percent Passing	Sieve	Percent Passing
3/8-inch	100	2 inch	100
No. 4	95-100	1-1/2 Inch	100
No. 8	80-100		
No. 16	50-85	3/4-inch	35-70
No. 30	25-60	3/8-inch	10-30
No. 50[1]	5-30	No. 4	0-5
No. 100	0-10		
No. 200[2]	0-3		

[1] Range is 6-35 when sand equivalent volume is greater than 85.
[2] Range is 0-6 for manufactured sand.

   a. Maximum amounts of organic impurities shall conform to ASTM C40 and C87. Maximum amounts of impurities finer than #200 sieve shall conform to ASTM C117. Maximum amounts of soft particles shall conform to ASTM C123. Maximum amounts of friable particles shall conform to ASTM C142.
   b. Fine aggregate shall have sand equivalent at least 80 per Tex-203-F. Provide fine aggregate with fineness modules 2.3 - 3.1 per ASTM C33.

c. Protect stockpiles from dusty conditions by drift fences or other methods approved by Engineer. Stockpiling methods used shall not allow aggregate to roll down slope as added to existing stockpiles. Build stockpiles in layers of uniform thickness. Equipment not permitted to operate over same lift repeatedly.

4. Coarse aggregate shall have maximum 18 percent loss when subjected to five cycles of magnesium sulfate soundness test or maximum 12 percent loss when subjected to five cycles of a sodium sulfate soundness test (ASTM C88).
5. Percentage of wear shall be no more than 40 when tested per ASTM C131 or C535.
6. Aggregates delivered to mixer shall consist of crushed stone, crushed gravel, or natural sand. Crushing shall result in a product where coarse aggregate shall have at least 95 percent by weight of particles with one or more fractured faces and 75 percent by weight of particles with two or more fractured faces. Aggregate shall be composed of sound, tough, durable particles and meet requirements for deleterious substances given in ASTM C33. Aggregate in any size group shall not contain more than 8 percent by weight of flat or elongated pieces. A flat or elongated particle has a ratio between maximum and minimum dimensions of circumscribing rectangular prism exceeding 3 to 1.

D. Water: ASTM C94.

2.13 ADMIXTURES

A. Admixtures certified by manufacturer to contain no more than 0.1 percent water-soluble chloride ions by mass of cement and compatible with other admixtures.
B. Air-Entraining Admixture: ASTM C260. Certified by manufacturer compatible with other required admixtures.
C. Water-Reducing Admixture: ASTM C494, Type A.
D. High-Range, Water-Reducing Admixture: ASTM C494, Types F or G.
E. Water-Reducing and Accelerating Admixture: ASTM C494, Type E.
F. Water-Reducing and Retarding Admixture: ASTM C494, Type D.

2.14 FIBER REINFORCEMENT

A. Only use fiber reinforcement in place of wire mesh if approved by Engineer and Owner.
B. Fiber reinforcement shall be 100 percent virgin polypropylene, collated, fibrillated fibers, made for use as concrete reinforcement, containing no reprocessed olefin materials, and conforming to ASTM C1116, Type III.
C. Specific gravity: .91.
D. Tensile Strength: 70,000 - 100,000 psi.
E. Length: 2 inches.

2.15 CURING COMPOUND

A. Liquid-type membrane-forming curing compound with white pigment complying with ASTM C309, Type 2, Class A. Moisture loss not more than 1.0 pound per square yard when applied at 200 square feet per gallon.

2.16 EPOXY

A. Provide Type III epoxy per DMS-6100, "Epoxies and Adhesives," for installing all drilled-in reinforcing steel.

2.17 EVAPORATION RETARDANT

A. Provide evaporation retardant per DMS-4650, "Hydraulic Cement Concrete Curing Materials and Evaporation Retardants."

2.18 JOINT SEALANTS AND FILLERS

A. Provide Class 5 or 8 joint-sealant materials and fillers unless otherwise shown on Plans or approved and other sealant materials of size, shape, and type shown on Plans per DMS-6310, "Joint Sealants and Fillers."

2.19 RELATED MATERIALS

A. Expansion- and Isolation-Joint-Filler Strips: ASTM D1751, asphalt-saturated cellulosic fiber.

B. Texture Surface for Ramps
   1. Meet requirements of Texas Accessibility Standards.
   2. Concrete paver units shall meet all requirements of ASTM C936 and C33 and laid in a two by two-unit basket-weave pattern.
   3. Color as selected by Owner but a contrasting color with adjacent surfaces.
   4. Durabak with Safti-Traxx Detacable Warning System by Cote-L Distribution Company, or approved equal.
   5. Owner may modify texture surface requirements for ramps by Owner any time to comply with Texas Accessibility Standards. No additional compensation made for such modification.

C. Bonding Agent: Polyvinyl acetate or acrylic base.

D. Sand Cushion: Clean, manufactured, or natural sand with plasticity index of eight or less.

2.20 CONCRETE MIXES

A. Prepare design mixes, proportioned per ACI 301, for each type and strength of normal-weight concrete determined by laboratory trial mixes or field experience.

B. Use a qualified independent testing agency for preparing and reporting proposed mix designs for trial batch method. Do not use Owner's field quality-control testing agency as independent testing agency.

C. Classification. The following classes of concrete shall be used:

D. Proportion mixes to provide concrete with water-cementitious materials ratio noted.

E. Mix Design:
   1. At least 15 days before beginning any concrete pavement construction, Contractor shall submit the following to Engineer for approval:
      a. Test certificates from approved commercial testing laboratory on all proposed aggregate. Certificates shall indicate material source, gradation, and loss from five-cycle magnesium sulfate soundness test (not to exceed 18 percent) or loss from five cycles of sodium sulfate soundness test (not to exceed 12 percent).
      b. Mix design based on water-cement ratio.
      c. Results of flexural and compression tests per ASTM C39 and/or flexural tests per ASTM C78, made by approved commercial testing laboratory. Tests shall be made on six cylinders/beams at curing times appropriate to concrete class.

2. Engineer will approve/reject mix design and materials based on submittals. This approval is subject to additional testing during construction. Mix designs for various classes of concrete shall conform to:

Class	Maximum Water/Cement Ratio	Maximum Slump Inches
A	.60	4
B	.60	3
C (slip formed)	.45	3
COC (formed)	.45	6
E	.45	as specified by concrete batch plant

3. Strength Requirements: Test at least three sets of design strength specimens with two specimens per set. Various classes of concrete shall conform to the following strengths in psi as determined by average of two test cylinders and beams:

		COMPRESSIVE		FLEXURAL	
Class	3-Day	7-Day	28-Day	7-Day	28-Day
A		2,100	3,000	425	
B	2,500	3,000	-	280	
C		3,500	4,400	750	680
D		-		-	
E	2,600 (24-hr)	Unless otherwise specified		400 (24-hr)	

F. Properties
1. Air Entrainment: 4 percent ASTM C260. If air content is more than 1 percentage points below/above required air, reject load of concrete.
2. Synthetic Fiber: Use manufacturer-recommended rate, but not less than 1.0 pound per cubic yard (where applicable).
3. Fly Ash: Not more than 30 percent by absolute volume of cement.

2.21 CONCRETE MIXING

A. Ready-Mixed Concrete: Comply with requirements, ASTM C94, and C1116 when synthetic fibers involved.
1. When air temperature is 85-90 degrees F, reduce mixing and delivery time from 90 to 75 minutes. When air temperature is above 90 degrees F, reduce mixing and delivery time to 60 minutes.
2. Mixing and delivery time starts at time of batching.

B. Project-Site Mixing: Comply with requirements and measure, batch, and mix concrete materials and concrete per ASTM C94. Mix concrete materials as appropriate and approved by Engineer.
1. For mixers of 1 cubic yard or smaller capacity, continue mixing at least 1.5 but not more than 5 minutes after ingredients are in mixer, before releasing any part of batch.
2. For mixers of capacity larger than 1 cubic yard, increase mixing time by 15 seconds for each additional 1 cubic yard.
3. Provide batch ticket for each batch discharged and used in Work, indicating Project identification name and number, date, mix type, mix time, quantity, and amount of water added. Batch ticket shall also indicate batching operation variances per ACI 304R.

a. Cement and supplementary cementitious material within ±1 percent of desired weight.
b. Aggregates measured within ±2 percent of desired weight (±1 percent when cumulative weight is taken).
c. Allowable water adjusted for free moisture in aggregates.
d. Admixtures discharged separately within a volumetric tolerance of ±3 percent using a method that does not allow concentrated admixtures to contact each other.

4. When using non-agitating equipment for transporting concrete, provide equipment with smooth, mortar-tight metal containers equipped with gates that prevent accidental discharge of concrete.

PART 3 - EXECUTION

3.1 PREPARATION

A. Proof-roll prepared subbase surface to check for unstable areas and verify need for additional compaction. Proceed with pavement only after nonconforming conditions have been corrected and subgrade is ready to receive pavement.
B. Remove loose material from compacted subbase surface immediately before placing concrete.

3.2 PLACING AND REMOVING FORMS

A. Use clean and oiled forms. Secure forms on base or firm subgrade accurately graded providing stable support without deflection and movement by form-riding equipment. Pin every form at least at middle and near each end. Tightly join and key form sections together to prevent relative displacement.

B. Set side forms far enough in advance of concrete placement to permit inspection. Check conformity of grade, alignment, and stability of forms immediately before placing concrete. Make all necessary corrections. Use a straightedge or other approved method to test top of forms to ensure ride quality requirements for completed pavement is met. Stop paving operations if forms settle or deflect more than 1/8-inch under finishing operations. Reset forms to line and grade and refinish concrete surface to correct grade.
C. Avoid damage to edge of pavement when removing forms. Repair damage resulting from form removal and honeycombed areas with mortar mix within 24 hours after form removal, unless otherwise approved. Clean joint face and repair honeycombed or damaged areas within 24 hours after bulkhead for transverse construction joint removed, unless otherwise approved. When forms are removed before 72 hours after concrete placement, promptly apply membrane curing compound to edge of concrete pavement.
D. Forms not the same depth as pavement but within 2 inches of depth are permitted if subbase is trenched or full width and length of form base supported with firm material to produce required pavement thickness. Promptly repair form trench after use. Use flexible/curved wood or metal forms for curves of 100-foot radius or less.

3.3 STEEL REINFORCEMENT

A. Comply with CRSI "Manual of Standard Practice" for fabricating reinforcement and recommendations in CRSI "Placing Reinforcing Bars" for placing and supporting reinforcement.

B. Clean reinforcement of loose rust and mill scale, earth, ice, or other bond-reducing materials.

C. Arrange, space, and securely tie bars and bar supports to hold reinforcement in position during concrete placement. Maintain minimum cover to reinforcement.

D. Install welded wire fabric in lengths as long as practicable. Lap adjoining pieces at least one full mesh, and lace splices with wire. Offset laps of adjoining widths to prevent continuous laps in either direction.

3.4 JOINTS

A. Reinforcing Steel and Joint Assemblies: Accurately place and secure in position all reinforcing steel as shown on Plans. Place dowels at mid-depth of pavement slab, parallel to surface. Place dowels for transverse contraction joints parallel to pavement edge. Tolerances for location and alignment of dowels shown on Plans. Stagger longitudinal reinforcement splices to avoid more than one-third of splices within a 2-foot longitudinal length of each lane of pavement. Use multiple-piece tie bars or drill and epoxy grout tie bars at longitudinal construction joints. Verify tie bars drilled and epoxied into concrete at longitudinal construction joints develop a pullout resistance equal to minimum three quarters of yield strength of steel after 7 days. Test fifteen bars using ASTM E488, except alternate approved equipment may be used. All fifteen tested bars must meet required pullout strength. If any test results do not meet required minimum pullout strength, perform corrective measures to provide equivalent pullout resistance. Repair damage from testing. Acceptable corrective measures include but not limited to installation of additional or longer tie bars.

B. Construct isolation, contraction, construction joints and tool edgings true to line with faces perpendicular to surface plane of concrete. Construct transverse joints at right angles to centerline, unless otherwise indicated. When joining existing pavement, place transverse joints to align with previously placed joints, unless otherwise indicated.

C. Construction Joints: Set at side and end terminations of pavement and where pavement operations are stopped more than 0.5 hour, unless pavement terminates at isolation joints.
   1. Continue reinforcement across construction joints but do not continue reinforcement through sides of pavement strips, unless otherwise indicated.
   2. Provide tie bars at sides of pavement strips where indicated.
   3. Use bonding agent where fresh concrete is placed against hardened or partially-hardened concrete surfaces.

D. Isolation Joints: Form of preformed joint-filler strips abutting concrete curbs, catch basins, manholes, inlets, structures, walks, other fixed objects, and where indicated.
   1. Extend joint fillers full width and depth of joint.
   2. Terminate joint filler less than 1/2- or more than 1 inch below finished surface if joint sealant indicated.
   3. Place top of joint filler flush with finished concrete surface if joint sealant not indicated.
   4. Furnish joint fillers in one-piece lengths. Where more than one length required, lace or clip joint-filler sections together.

5. Protect top edge of joint filler during concrete placement with metal, plastic, or other temporary preformed cap. Remove protective cap after concrete is placed on both sides of joint.

3.5 CONCRETE DELIVERY

A. Clean delivery equipment as necessary to prevent accumulation of old concrete before loading fresh concrete. Use agitated delivery equipment for concrete designed with a slump more than 5 inches. Segregated concrete is subject to rejection. Place agitated concrete within 60 minutes after batching. Place non-agitated concrete within 45 minutes after batching. In hot weather or under conditions causing quick setting concrete, times may be reduced by Engineer. Time limitations may be extended if Contractor can demonstrate concrete can be properly placed, consolidated, and finished without additional water.

3.6 CONCRETE PLACEMENT

A. For all roadway lane pavement, construct pavement with approved slip-form paving machine designed to spread, consolidate, screed, and float-finish freshly-placed concrete in one complete pass of machine so dense and homogeneous pavement is achieved with minimal hand finishing. Paver-finisher shall be heavy duty, self-propelled machine designed specifically for paving and finishing high-quality concrete pavements. Individual placement areas of less than 500 square yards, or irregular areas where inaccessible to slip-form paving equipment, place cement concrete pavement with approved placement and finishing equipment utilizing stationary side forms. Only utilize hand screeding and float finishing on small irregular areas as allowed by Engineer.

B. Concrete Placement: Do not allow pavement edge to deviate from established paving line by more than 1/2-inch at any point. Place concrete as near as possible to final location, and minimize segregation and rehandling. Where hand spreading necessary, distribute concrete using shovels. Do not use rakes or vibrators to distribute concrete.
   1. Pavement: Consolidate all concrete by approved mechanical vibrators operated on front of paving equipment. Use immersion-type vibrators to simultaneously consolidate full width of placement when machine finishing. Keep vibrators from dislodging reinforcement. Use hand-operated vibrators to consolidate concrete in areas inaccessible to machine-mounted vibrators. Do not operate machine-mounted vibrators while paving equipment is stationary. Vibrator operations subject to review.

C. Curbs and Gutters: When automatic machine placement is used for curb and gutter placement, submit revised mix design and laboratory test results to meet/exceed requirements. Produce curbs and gutters to required cross section, lines, grades, finish, and jointing as specified for formed concrete. If results not approved, remove and replace with formed concrete.

D. When adjoining pavement lanes are placed in separate pours, do not operate equipment on concrete until pavement attains 85 percent of 28-day compressive strength.

E. Cold-Weather Placement: Comply with ACI 306.1. Protect concrete Work from physical damage or reduced strength caused by frost, freezing actions, or low temperatures.
   1. When air temperature falls to, or is expected to fall below, 40 degrees F, uniformly heat water and aggregates before mixing to obtain a concrete mixture temperature not less than 50 nor more than 80 degrees F at point of placement.
   2. Do not use frozen materials or materials containing ice or snow.
   3. Do not use calcium chloride, salt, or other materials containing antifreeze agents or chemical accelerators, unless otherwise specified and approved in mix designs.

F. Hot-Weather Placement: Place concrete per recommendations in ACI 305R and as follows when hot-weather conditions exist:
   1. Cool ingredients before mixing to maintain concrete temperature at time of placement below 90 degrees F. Chilled mixing water or chopped ice may be used to control temperature, if water equivalent of ice is calculated to total amount of mixing water. Using liquid nitrogen to cool concrete is Contractor option.
   2. Cover reinforcement steel with water-soaked burlap so steel temperature will not exceed ambient air temperature immediately before embedding in concrete.
   3. Fog-spray forms, reinforcement steel, and subgrade just before placing concrete. Keep subgrade moisture uniform without standing water, soft spots, or dry areas.

3.7 CONCRETE FINISHING

A. Finish all concrete pavement with approved self-propelled equipment. Use power-driven spreaders, vibrators, and strike-off, screed, or approved alternate equipment. Use transverse finishing equipment to compact and strike off concrete to required section and grade without surface voids. Use float equipment for final finishing. Use concrete with a consistency to allow completion of all finishing operations without addition of water to surface. Use minimal amount of water fog mist necessary to maintain moist surface. Reduce fogging if float or straightedge operations result in excess slurry.
   1. Finished Surface: As soon as concrete hardens sufficiently, test pavement surface in transverse direction with 16-foot straightedge or other specified device. Surface smoothness deviations shall not exceed 1/4-inch from 16-foot straightedge at any location, including placement along and spanning any pavement joint or edge.
      a. Mark areas in slab showing high spots more than 1/4-inch but not exceeding 1/2-inch in 16 feet and immediately grind down with approved grinding machine to elevation that falls within tolerance of 1/4-inch or less. Where departure from correct cross section exceeds 1/2-inch, remove and replace pavement at expense of Contractor when Engineer directs.
   2. Maintain Surface Moisture: Prevent surface drying of pavement before application of curing system. Accomplish by fog application of evaporation retardant on pavement surface. Apply evaporation retardant at manufacturer-recommended rate. Reapply evaporation retardant as needed to maintain concrete surface in a moist condition until curing system applied. Do not use evaporation retardant as finishing aid. Failure to take acceptable precautions to prevent surface drying of pavement is cause for shut down of pavement operations.
   3. Surface Texturing: Perform using combination of carpet drag and metal tining. Complete final texturing before concrete attains initial set. Draw carpet drag longitudinally along pavement surface with carpet contact surface area adjusted to provide a satisfactory coarsely textured surface. Metal-tine texture finish required unless otherwise shown on Plans. Provide metal-tine finish immediately after concrete surface set enough for consistent tining. Operate metal-tine device to obtain grooves spaced at 1 inch, approximately 3/16-inch deep, minimum 1/8-inch depth, and approximately 1/12-inch wide. Do not overlap a previously-tined area. Use manual methods for achieving similar results on ramps and other irregular sections of pavements. Repair damage to edge of slab and joints immediately after texturing. Do not tine pavement to overlay.
      a. Burlap Finish: For sidewalks, drag a seamless strip of damp burlap across float-finished concrete, perpendicular to line of traffic, to provide a uniform, gritty texture.

b. Medium-to-Fine-Textured Broom Finish: For curb and gutter, draw a soft bristle broom across float-finished concrete surface perpendicular to line of traffic to provide a uniform, fine-line texture.

c. Medium-to-Coarse-Textured Broom Finish: For fillets, driveways, and alleys, provide coarse finish by striating float-finished concrete surface 1/16- to 1/8-inch deep with stiff-bristled broom, perpendicular to line of traffic. Tined Finish: For concrete pavement, perform surface texturing using a combination carpet drag and metal tining. Complete final texturing before concrete attains initial set. Draw carpet drag longitudinally along pavement surface with carpet contact surface area adjusted to provide a satisfactory coarsely-textured surface.

4. Small or Irregular Placements. Where machine placements and finishing concrete pavement not practical, use hand equipment and procedures to produce a consolidated and finished pavement section to line and grade.

5. Emergency Procedures. Use hand-operated equipment for applying texture, evaporation retardant, and cure in event of equipment breakdown.

3.8 CONCRETE PROTECTION AND CURING

A. Curing: Keep concrete pavement surface from drying by water fogging until curing material is applied. If forms removed during day of placement, apply curing compound to exposed areas. When placing concrete pavement, place curing compound on backside of curb. Maintain and promptly repair damage to curing materials on exposed surfaces of concrete pavement continuously at least three curing days unless specified otherwise. A curing day is a 24-hour period when temperature taken in shade away from artificial heat is above 50 degrees F at least 19 hours or surface temperature of concrete is maintained above 40 degrees F, 24 hours. Curing begins when concrete curing system is applied. Stop concrete paving if curing compound not applied promptly and maintained adequately.

B. Protect freshly-placed concrete from excessive cold or hot temperatures. Comply with ACI 306.1 for cold-weather protection and follow recommendations in ACI 305R for hot-weather protection during curing. Submit for approval, proposed measures to protect concrete from anticipated freezing weather for first 72 hours after placement. Repair or replace all concrete damaged by freezing.

C. Evaporation Retarder: Apply to concrete surfaces if hot, dry, or windy conditions cause moisture loss approaching 0.2-pound per square foot by height before and during finishing operations. Apply per manufacturer-written instructions after placing, screeding, and bull floating or darbying concrete, but before float finishing.

D. Begin curing after finishing concrete but not before free water disappears from concrete surface.

E. Curing Methods: Cure concrete by moisture curing, moisture-retaining-cover curing, curing compound, or a combination:

1. Moisture Curing: Keep surfaces continuously moist no less than seven days with:

a. Water.

b. Continuous water-fog spray.

c. Absorptive cover, water saturated, kept continuously wet. Cover concrete surfaces and edges with 12-inch lap over adjacent absorptive covers.

2. Moisture-Retaining-Cover Curing: Cover concrete surfaces with moisture-retaining cover for curing concrete, placed in widest practicable width, with sides and ends lapped at least 12 inches, sealed by waterproof tape or adhesive. Immediately repair any holes or tears during curing period using cover material and waterproof tape. Curing Compound: After texturing and immediately after free surface moisture disappears, spray concrete surface uniformly with two coats of membrane-curing compound at individual application rate not more than 180 square feet per gallon. Apply first coat within 10 minutes after completing texturing operations. Apply second coat within 30 minutes after completing texturing operations. Before and during application, maintain curing compounds in uniformly-agitated condition, free of settlement. Do not thin or dilute curing compound. Where coating shows discontinuities, other defects, or rain falls on newly-coated surface before film dries enough to resist damage, apply additional compound at same rate of coverage to correct damage. Ensure curing compound coats sides of tining grooves.
3. Curing Class E Concrete: For all Class HES concrete pavement, provide membrane curing per Section 360.4.I.1, "Membrane Curing," followed promptly by moisture curing until opening strength achieved, but not less than 24 hours.

3.9 SAWING JOINTS

A. Saw joints to depth shown on Plans as soon as sawing accomplished without damage to pavement regardless of time of day or weather conditions. Once sawing commences, continue until completed. All such sawing must be completed within 12 hours of placement. Use chalk line, string line, sawing template, or other approved method to provide a true joint alignment. Provide enough saws to match paving production rate to ensure sawing completion at earliest possible time to avoid uncontrolled cracking. Reduce paving production if necessary to ensure timely sawing of joints. Promptly restore membrane cure damaged within first 72 hours of curing.

3.10 PROTECT PAVEMENT AND OPENING TO TRAFFIC

A. Testing for early opening is Contractor responsibility regardless of job-control testing responsibilities unless otherwise shown on Plans or directed. Testing result interpretation for opening to traffic is subject to Engineer approval.
1. Protect Pavement: Erect and maintain barricades and other standard and approved devices to exclude all vehicles and equipment from newly-placed pavement for periods specified. Before opening to traffic, protect pavement from damage due to crossings using approved methods. Where detour not readily available or economically feasible, occasional crossing of roadway with overweight equipment may be permitted for relocating equipment only, but not for hauling material. When occasional crossing of overweight equipment permitted, temporary matting or other approved methods may be required. Maintain adequate supply of sheeting or other material to cover and protect fresh concrete surface from weather damage. Apply as needed to protect pavement surface from weather.
2. Opening Pavement to All Traffic: Pavement 7 days old may be opened to all traffic. Before opening to traffic, clean pavement, place stable material against pavement edges, seal joints, and perform all other traffic safety-related Work.

3. Opening Pavement to Construction Equipment: Unless otherwise shown on Plans, concrete pavement may be opened early to concrete paving equipment and related delivery equipment after concrete is at least 48 hours old and opening strength is demonstrated per "Early Opening to All Traffic," before curing complete. Keep delivery equipment at least 2 feet from edge of concrete pavement. Keep tracks of paving equipment at least 1 foot from pavement edge. Protect textured surfaces from paving equipment. Restore damaged membrane curing as soon as possible. Repair pavement damaged by paving or delivery equipment before opening to all traffic.
4. Early Opening to All Traffic: Concrete pavement may be opened after curing is complete and concrete attains a flexural 450-psi strength or 2,800-psi compressive strength, except that pavement using Class HES concrete may be opened after 24 hours if specified strength achieved.
   a. Strength Testing: Test concrete specimens cured under same conditions as portion of pavement involved.
5. Emergency Opening to Traffic: Under emergency conditions, when pavement is at least 72 hours old, open pavement to traffic when directed in writing. Remove all obstructing materials, place stable material against pavement edges, and perform other Work involved in providing for safety of traffic as required for emergency opening.

3.11 PAVEMENT THICKNESS

A. Engineer will check thickness per Tex-423-A unless other methods shown on Plans. Engineer will perform one thickness test consisting of one reading at the approximate center of each lane every 500 feet or fraction thereof. Core where directed per Tex-424-A to verify deficiencies more than 0.2 inches from plan thickness and determine limits of deficiencies of more than 0.75 inches from plan thickness. Fill core holes using a concrete mixture and method approved by Engineer.
   1. Thickness Deficiencies Greater than 0.2-inch: When any depth test measured per Tex-423-A is deficient more than 0.2-inch from plan thickness, take one 4-inch diameter core at that location to verify measurement. If core is deficient more than 0.2 but not by more than 0.75-inch from plan thickness, take two additional cores from unit (as defined herein) at intervals at least 150 feet, locations selected by Engineer, and determine thickness of unit for payment purposes by average length of three cores. In calculations of average thickness of this unit of pavement, measure in excess of specified thickness more than 0.2-inch considered specified thickness +0.2 inches.
   2. Thickness Deficiencies Greater than 0.75-inch: If core is deficient more than 0.75, take additional cores at 10-foot intervals in each direction parallel to centerline to determine boundary of deficient area. Engineer will evaluate any area of pavement found deficient in thickness by more than 0.75-inch but not more than 1 inch. As directed, remove and replace deficient areas without additional compensation or retain deficient areas without compensation. Remove and replace any area of pavement found deficient in thickness by more than 1 inch without additional compensation.
   3. Pavement Units for Payment Adjustment: Limits for applying payment adjustment for deficient pavement thickness from 0.20-inch to not more than 0.75 inch, are 500 foot of pavement in each lane. Lane width as shown on typical sections and pavement design standards.

a. For greater than 0.75-inch deficient thickness, limits for applying zero payment or requiring removal defined by coring or equivalent nondestructive means as Engineer determines. Remaining portion of unit determined less than 0.75-inch deficient subject to payment adjustment based on average core thickness at each end of 10-foot interval investigation as Engineer determines.

b. Measure shoulders for thickness unless otherwise shown on Plans. Shoulders 6 feet wide or wider considered lanes. Shoulders less than 6 feet wide considered part of adjacent lane.

c. Limits for applying payment adjustment for deficient pavement thickness for ramps, widenings, acceleration and deceleration lanes, and other miscellaneous areas are 500 feet in length. Ares less than 500 feet in length will be individually evaluated for payment adjustment based on plan area.

4. Deficient Thickness Adjustment: Where average thickness of pavement is deficient in thickness more than 0.2-inch but not more than 0.75 inches, payment made using adjustment factor as specified in Table 2 applied to bid price for deficient area for each unit as defined herein.

Table 2 - DEFICIENT THICKNESS PRICE ADJUSTMENT FACTOR

Deficiency in Thickness Determined by Cores (in.)	Proportional Part of Contract Price Allowed (adjustment factor)
Not deficient	1.00
Over 0.00 through 0.20	1.00
Over 0.20 through 0.30	0.80
Over 0.30 through 0.40	0.72
Over 0.40 through 0.50	0.68
Over 50.0 through 0.75	0.57

3.12 Pavement Markings

A. Permanent pavement markings shall be reflectorized multipolymer applied per manufacturer recommendations including surface preparation.

B. Materials and installation for surface markings shall be per TxDOT Specifications.

3.13 FIELD QUALITY CONTROL

A. Testing Agency: Contractor shall sample materials, perform tests, and submit test reports during concrete placement. Contractor personnel performing testing must be ACI-certified or qualified by recognized equivalent written and performance testing program for tests performed. Sampling and testing for quality control include those specified herein.

B. Job-Control Testing: Unless otherwise shown on Plans, perform all fresh and hardened concrete job-control testing at specified frequency. Using a commercial laboratory is acceptable. Maintain all testing equipment calibrated per pertinent test methods. Make strength-testing equipment available to Engineer for verification testing. Provide Engineer the opportunity to witness all tests. Engineer may require retest if not given opportunity to witness. Furnish copy of all tests results to Engineer daily. Engineer will direct random job-control sampling and testing. Immediately investigate and take corrective action as approved if any Contractor test results, including tests performed for verification purposes, does not meet specification requirements. When job-control testing by Contractor is waived by Plans, Engineer will perform testing; however, this does not waive Contractor responsibility for providing materials and Work per this Item.

C. Job-Control Strength: Unless otherwise shown on Plans or permitted by Engineer, use seven-day job-control strength testing per ASTM C78. When job-control concrete strength test value is more than 10 percent below required job-control strength or three consecutive job-control strength values fall below required job-control strength, investigate strength test procedures, quality of materials, concrete production operations, and other possible problem areas to determine cause. Take necessary action to correct problem, including redesigning concrete mix if needed. Owner may suspend concrete paving if Contractor unable to identify, document, and correct cause of low-strength test values in timely manner. If any job-control strength is more than 15 percent below required job-control strength, Engineer will evaluate structural adequacy of pavements. When directed, remove and replace pavements found structurally inadequate at no additional cost.

D. Testing Services: Performed per the following requirements:

1. Sampling Fresh Concrete: Obtain representative samples of fresh concrete per ASTM C172, except modified for slump to comply with ASTM C94.
2. Flexural and Compressive-Strength Tests: ASTM C78 and C39; one set for each day's pour of each concrete class exceeding five but less than 25 cubic yards, plus one set for each additional 50 cubic yards. Test one specimen at 7 days and two specimens at 28 days. Retain one specimen in reserve for later testing if required. Provide Engineer the opportunity to witness all tests. Engineer may require a retest if not given the opportunity to witness. Furnish a copy of all test results to Engineer daily. Check first few concrete loads for slump, air, and temperature on start-up production days to check for concrete conformance and consistency. Sample and prepare strength test specimens (two specimens per test) on first day of production and each 2,000 square yards or fraction thereof of concrete pavement thereafter. Prepare at least one set of strength-test specimens for each production day. Perform slump, air, and temperature tests each time strength specimens made. Monitor concrete temperature to ensure concrete is consistently within temperature requirements. Engineer will direct random job-control sampling and testing. Immediately investigate and take corrective action as approved if any Contractor test result, including tests performed for verification purposes, does not meet specification requirements.
3. When frequency of testing provide fewer than five strength tests for given class of concrete, test from at least five randomly-selected batches or from each batch if fewer than five are used.
4. Slump: ASTM C143; one test at point of placement for each strength test, but not less than one test for each day's pour of each type of concrete. Additional tests will be required when concrete consistency changes.
5. Air Content: ASTM C231, pressure method; one test for each strength test, but not less than one test for each day's pour of each type of air-entrained concrete.
6. Concrete Temperature: ASTM C1064; one test hourly when air temperature is 40 degrees F and below, 80 degrees F and above, and one test for each set of strength specimens.
7. Test Specimens: ASTM C31; one set of two standard beams and one set of four standard cylinders for each flexural and compressive-strength test, unless otherwise indicated. Flexural strength test specimens cured under same conditions as portion of pavement involved. Molded and stored cylinders for laboratory-cured test specimens unless field-cured test specimens required.

E. Report test results in writing to Engineer and Contractor within 24 hours of testing. Reports of strength tests shall contain Project identification name and number, date of concrete placement, name of concrete testing agency, concrete type and class, location of concrete batch in pavement, design strengths at required time, concrete mix proportions and materials, breaking strengths, and type of break for both 7- and 28-day tests.

F. Nondestructive Testing: Impact hammer, sonoscope, or other nondestructive device may be permitted by Engineer but not used as sole basis for approval/rejection.

G. Additional Tests: Contractor shall additionally test concrete when test results indicate slump, air entrainment, concrete strengths, or other requirements not met, as Engineer directed. Contractor may conduct tests to determine adequacy of concrete by cored cylinders complying with ASTM C42, or by other methods as directed.

H. Contractor shall pay for failing tests.

I. Questionable Concrete:

1. Concrete considered "Questionable Concrete" with any of these test evaluations:
   a. Individual test strength is below specified strength; or
   b. Samples of concrete for acceptance test cylinders or acceptance test beams not representative of concrete-in-place in pavement; or
   c. Insufficient or inadequate concrete curing; or
   d. Insufficient number of acceptance test cylinders or acceptance test beams for day's concreting made for testing.
   e. In-place core densities, on average, are less than 97 percent of original mix design density, or any one core is below 96 percent original mix design density.
2. Except where core tests impair strength of structure, core test as Owner directs made at no cost to Owner to resolve Questionable Concrete. If core tests fail to demonstrate test strength required by Contract Documents or structural analysis does not confirm adequacy of structure, Owner may, at his discretion, reject Work or require load tests or additional construction. Should structural analysis confirm adequacy of pavement, Owner may, at his discretion, accept concrete with credit for full value of concrete delivered to Site per General Conditions.
3. Contractor shall pay all costs incurred in providing the additional testing or analysis to resolve acceptability of Questionable Concrete.
4. Core Tests
   a. Take three representative cores from each member or area of concrete for each test considered questionable. Location of cores as directed by Owner to least impair strength of pavement. Replace damaged cores.
   b. Obtain and test cores per ASTM C42 except if concrete in structure will be dry under service conditions, cores shall be air dried (60-80 degrees F, and relative humidity less than 60 percent) for 7 days before test, tested dry. If concrete in structure is more than superficially wet under service conditions, cores shall be immersed in water at least 48 hours and tested wet.

3.14 REPAIRS AND PROTECTION

A. Remove and replace concrete pavement that is broken, damaged, or defective, or does not meet requirements herein.

B. Drill test cores where directed by Engineer when necessary to determine magnitude of cracks or defective areas. Fill drilled core holes in satisfactory pavement areas with Portland cement concrete bonded to pavement with epoxy adhesive.

C. Protect concrete from damage. Exclude traffic from pavement for at least 14 days after placement. When construction traffic permitted, maintain pavement as clean as possible by removing surface stains and spillage of materials as they occur.

D. Maintain concrete pavement free of stains, discoloration, dirt, and other foreign material from construction traffic. Sweep concrete pavement no more than two days before date scheduled for opening section to public traffic.

END OF SECTION

PACKET

City Of Midland

Citizen's Collection Stations

Construction Plans

6400 W. Highway 80

Midland and Martin County, Texas

6.402



July 11, 2023

[redacted]

4222 85th St.
Lubbock, TX 79423
806.473.2200

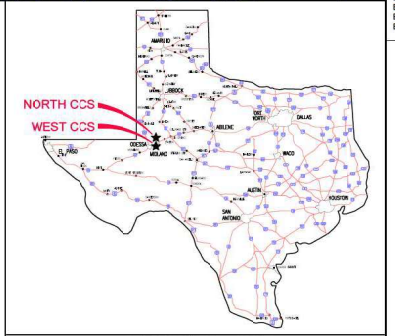

VICINITY MAP

Sheet Index

General

G-001	Cover And Sheet Index
G-011	Symbols Legends & Abbreviations
G-021	Accessibility Standards
G-022	Accessibility Standards
G-023	Accessibility Standards
G-024	Accessibility Standards
G-101	Code Information

Civil

	WEST CCS
V-001	Topographic Survey
C-001	West CCS Demolition Plan
C-002	West CCS Erosion Control Plan
C-100	West CCS Site Utility Plan
C-101	West CCS Site Layout Plan
C-102	West CCS Site Grading Plan
C-103	West CCS Concrete Pavement Jointing Plan
C-104	West CCS Signage Control Plan
C-601	West Control Point Tables
	NORTH CCS
V-002	Topographic Survey
C-003	North CCS Erosion Control Plan
C-105	North CCS Site Utility Plan
C-106	North CCS Site Layout Plan
C-107	North CCS Site Grading Plan
C-108	North CCS Concrete Pavement Jointing Plan
C-109	North CCS Signage Control Plan
C-110	North CCS Site Access Plan
C-111	North CCS Proximity to Oil Field Equipment
C-602	North CCS Control Point Tables
	General Details
C-301	Site Cross Sections
C-501	Detail Sheet
C-502	Detail Sheet
C-503	Absorptivs Drainfield Details
C-504	Fencing Details

Structural

S-001	General Notes
S-002	Typical Foundation Details
S-003	Light Gauge Steel Details
S-111	Foundation Plan
S-121	Mezzanine Framing Plan
S-501	Foundation Details
S-502	Foundation Details
S-511	Framing Details

Architectural

A-001	Architectural Interior Legends
A-002	Interior Partition Schedule
A-111	Annotated & Dimensioned Plans
A-131	Reflected Ceiling Plan & Roof Plan
A-201	Exterior Elevations & Building Sections
A-211	Interior Elevations & Enlarged Plans
A-311	Wall Sections
A-501	Details
A-502	Details
A-503	Details
A-601	Door & Glazing Schedule
A-605	Aluminum Frame Schedule & Opening Details
A-901	3D Views

Plumbing

P-001	Plumbing Abbreviations & Legends
P-111	Plumbing Plan
P-601	Plumbing Details & Schedules
P-901	Plumbing Risers

Mechanical

M-001	Mechanical Abbreviations & Legends
M-111	Mechanical Plan
M-601	Mechanical Schedules

Electrical

E-001	Electrical Abbreviations & Legend
E-100	Electrical Site Plan - North Site
E-100	Electrical Site Plan - West Site
E-111	Electrical Lighting Plan
E-121	Power & Communications Plan
E-122	Mechanical Equipment Power Plan
E-501	Electrical Riser Diagram And Details
E-601	Electrical Schedules

Parkhill

THIS DOCUMENT IS RELEASED ON 06/27/2023 FOR THE PURPOSE OF INTERIM REVIEW UNDER THE AUTHORITY OF SPENSER J. HARVEY, P.E., TEXAS LICENSE #138737. IT IS NOT TO BE USED FOR REGULATORY APPROVAL, CONSTRUCTION, BIDDING OR PERMIT PURPOSES.
PARKHILL, SMITH & COOPER, INC. F-560

ISSUED FOR INFORMATIONAL PURPOSES ONLY

Parkhill.com

Citizen Collection Stations

City Of Midland

MIDLAND
Fuel the Energy!

CLIENT
City of Midland, Texas

300 N. Loraine
Midland, TX

PROJECT NO.
6119.21 - WEST
40015.22 - NORTH

#	DATE	DESCRIPTION
-	06/27/2023	City Council Review

Cover and Sheet Index

G-001

FILE NAME: A:\2021\6119-21\03_DSGN\01_DWG\010_GENG\G-001-6119-21 - W_N.dwg LAYOUT NAME: G-001 PRINTED: Monday, June 26, 2023 - 11:35am USER: Sharvey

PACKET 6.403

July 11, 2023

ABBREVIATIONS

A		
ACC	ACCESSIBLE	
AB	ANCHOR BOLT	
ACI	AMERICAN CONCRETE INSTITUTE	
AD	AREA DRAIN	
ADA	AMERICANS WITH DISABILITIES ACT	
ADDL	ADDITIONAL	
ADJ	ADJUSTABLE	
ADDM	ADDENDUM	
AFF	ABOVE FINISH FLOOR	
AHU	AIR HANDLING UNIT	
AIA	AMERICAN INSTITUTE OF ARCHITECTS	
AISC	AMERICAN INSTITUTE OF STEEL CONSTRUCTION	
ALT	ALTERNATE	
ALUM	ALUMINUM	
ANOD	ANODIZED	
ANSI	AMERICAN NATIONAL STANDARDS INSTITUTE	
APA	AMERICAN PLYWOOD ASSOCIATION	
APPROX	APPROXIMATE	
ARCH	ARCHITECT	
ASCE	AMERICAN SOCIETY OF CIVIL ENGINEERS	
ASTM	AMERICAN SOCIETY OF TESTING MATERIALS	
AUTO	AUTOMATIC	
AVG	AVERAGE	
AWG	AMERICAN WIRE GAGE	
AWS	AMERICAN WELDING SOCIETY	
A/C	AIR CONDITIONING	
B		
BAL	BALANCE	
BC	BACK OF CURB	
BIA	BRICK INSTITUTE OF AMERICA	
BITUM	BITUMINOUS	
BL	BUILDING LINE	
BLDG	BUILDING	
BM	BENCHMARK	
BOCA INTERNATIONAL, INC.	BUILDING OFFICIALS AND CODE ADMINISTRATORS	
BOS	BOTTOM OF STEEL	
BOT	BOTTOM (BOTTOM FACE, LAYER, SIDE)	
B PL	BASE PLATE	
BRDG	BRIDGING	
BRG	BEARING	
BTWN	BETWEEN	
BUR	BUILT-UP ROOFING	
C		
C	AMERICAN STANDARD CHANNEL (STRUCTURAL SHAPE)	
CU FT	CUBIC FOOT	
CF/CI	CONTRACTOR FURNISHED/CONTRACTOR INSTALLED	
CF/OI	CONTRACTOR FURNISHED/OWNER INSTALLED	
CG	CORNER GUARD	
CI	CAST IRON	
CIR	CIRCLE	
CIRC	CIRCULAR	
CJ	CONTROL JOINT	
CL	CENTER LINE	
CLG	CEILING	
cm	CENTIMETER	
CMU	CONCRETE MASONRY UNIT	
COL	COLUMN	
CONC	CONCRETE	
CONN	CONNECT	
CONSTR	CONSTRUCTION	
CONT	CONTINUE	
CONTR	CONTRACTOR	
CRCMF	CIRCUMFERENCE	
CSK	COUNTER SUNK	
CSI	CONSTRUCTION SPECIFICATIONS INSTITUTE	
D		
D	DEPTH	
DAT	DATUM	
DBL	DOUBLE	
DDS	DOUBLE DISPLAY STRIP	
DEG	DEGREE	
DEMO	DEMOLISH	
DET	DETAIL	
DF	DRINKING FOUNTAIN	
DIA	DIAMETER	
DIAG	DIAGONAL	
DIM	DIMENSION	
DIV	DIVIDE	
DL	DEAD LOAD	
DS	DOWNSPOUT	
DWG	DRAWING	
E		
E	EAST, MODULUS OF ELASTICITY	
EA	EACH	
EF	EACH FACE, EXTERIOR FINISH	
EIFS	EXTERIOR INSULATION FINISH SYSTEM	
EJ	EXPANSION JOINT	
EL	ELEVATION	
ELEC	ELECTRIC, ELECTRICAL	
ELEV	ELEVATOR	
ENGR	ENGINEER	
EQ	EQUAL	
EQUIP	EQUIPMENT	
EW	EACH WAY	
EWC	ELECTRIC WATER COOLER	
EXIST	EXISTING	
EXP	EXPANSION	
EXP BT	EXPANSION BOLT	
EXT	EXTERIOR	
F		
FD	FLOOR DRAIN	
FDTN	FOUNDATION	
FEB	FIRE EXTINGUISHER & BRACKET	
FEC	FIRE EXTINGUISHER & CABINET	
FF EL	FINISH FLOOR ELEVATION	
FIN FLR	FINISH FLOOR	
FIN	FINISH(ED)	
FOC	FACE OF CONCRETE, FACE OF CURB	
FOF	FACE OF FINISH	
FOM	FACE OF MASONRY	
FOS	FACE OF STUD	
FOW	FACE OF WALL	
FRTW	FIRE RETARDANT TREATED WOOD	
FS	FAR SIDE (FACE, LAYER)	
FT	FOOT	
FTG	FOOTING	
FURG	FURRING	
G		
GA	GAGE	
GALV	GALVANIZED	
GC	GENERAL CONTRACTOR	
GFCI	GROUND FAULT CIRCUIT INTERRUPTER	
GOVT	GOVERNMENT	
GYP BD	GYPSUM BOARD	
GYP	GYPSUM	
H		
HDBD	HARDBOARD	
HDWD	HARDWOOD	
HDW	HARDWARE	
HEX	HEXAGON(AL)	
HM	HOLLOW METAL	
HORIZ	HORIZONTAL	
HP	HEAT PUMP	
HS	HIGH STRENGTH	
HT	HEIGHT	
HVAC	HEATING VENTILATION AND AIR CONDITIONING	
I		
I	MOMENT OF INERTIA	
IBC	INTERNATIONAL BUILDING CODE	
ID	INSIDE DIAMETER	
IF	INSIDE FACE	
INCL	INCLUDE(D)(ING)(SIVE)	
INS	INSULATION	
INT	INTERIOR	
INV	INVERT(ED)	
J		
JAN	JANITOR	
K		
NOT USED		
L		
l	LITER	
L	ANGLE	
LB	POUND	
LH	LEFT HAND	
LL	LIVE LOAD	
LLH	LONG LEG HORIZONTAL	
LLV	LONG LEG VERTICAL	
LT	LIGHT	
LT WT	LIGHT WEIGHT	
M		
MAU	MAKE UP AIR UNIT(S)	
m	METER(S)	
MATL	MATERIAL	
MAX	MAXIMUM	
MB	MACHINE BOLT	
MCJ	MASONRY CONTROL JOINT	
MECH	MECHANICAL(LY)	
MFG	MANUFACTURING	
MFR	MANUFACTURER	
MIL STD	MILITARY STANDARD	
MIN	MINIMUM	
MISC	MISCELLANEOUS	
mm	MILLIMETER	
MO	MASONRY OPENING	
MOD	MODIFY	
MT	METAL THRESHOLD	
MTL	METAL	
MLWK	MILLWORK	
N		
N	NORTH	
NA	NOT APPLICABLE	
NAT	NATURAL	
NBS	NATIONAL BUREAU OF STANDARDS	
NFPA	NATIONAL FIRE PROTECTION ASSOCIATION	
NIC	NOT IN CONTRACT	
NOM	NOMINAL	
NRC	NOISE REDUCTION COEFFICIENT	
NS	NEAR SIDE (FACE)	
NTS	NOT TO SCALE	
O		
OC	ON CENTER	
OD	OUTSIDE DIAMETER	
OF	OUTSIDE FACE	
OFD	OVERFLOW DRAIN	
OF/CI	OWNER FURNISHED/CONTRACTOR INSTALLED	
OF/OI	OWNER FURNISHED/OWNER INSTALLED	
OH DR	OVERHEAD DOOR	
OPNG	OPENING	
OPH	OPPOSITE HAND	
OSHA	OCCUPATIONAL SAFETY AND HEALTH ADMINISTRATION	
Oz	OUNCE	
P		
PAR	PARALLEL	
PCA	PORTLAND CEMENT ASSOCIATION	
PCF	POUNDS PER CUBIC FOOT	
PCI	PRESTRESSED CONCRETE INSTITUTE	
PERF	PERFORATE(D)	
PERP	PERPENDICULAR	
PL	PROPERTY LINE	
PLAM	PLASTIC LAMINATE	
PLF	POUNDS PER LINEAL FOOT	
PR	PAIR	
PREFAB	PREFABRICATE	
PREFIN	PREFINISH	
PRELIM	PRELIMINARY	
PROJ	PROJECT	
PSF	POUNDS PER SQUARE FOOT	
PSI	POUNDS PER SQUARE INCH	
PBD	PARTICLE BOARD	
PTD	PAPER TOWEL DISPENSER	
PTDWR	PAPER TOWEL DISPENSER & WASTER RECEPTACLE	
PVC	POLYVINYL CHLORIDE	
PLWD	PLYWOOD	
PVG	PAVING	
Q		
QC	QUALITY CONTROL	
QTY	QUANTITY	
R		
R	RADIUS	
RCP	REFLECTED CEILING PLAN	
RD	ROOF DRAIN	
REF	REFERENCE	
REFL	REFLECT	
REINF	REINFORCE	
REQD	REQUIRED	
REV	REVISION	
RH	RIGHT HAND(ED)	
RO	ROUGH OPENING	
ROW	RIGHT OF WAY	
RTU	ROOF TOP UNIT	
S		
S	SOUTH	
SBCCI	SOUTHERN BUILDING CODE CONGRESS INTERNATIONAL	
SCHED	SCHEDULE	
SD	SOAP DISPENSER	
SDI	STEEL DOOR INSTITUTE	
SECT	SECTION	
SHT	SHEET	
SIM	SIMILAR	
SJI	STEEL JOIST INSTITUTE	
SPEC	SPECIFICATION	
SP	SOLID PLASTIC	
SST	STAINLESS STEEL	
STD	STANDARD	
STL	STEEL	
STRUCT	STRUCTURAL	
SUSP	SUSPENDED	
SYMM	SYMMETRICAL	
T		
TRD	TREAD	
TAN	TANGENT	
TEMP	TEMPORARY	
TFF	TOP OF FINISH FLOOR	
THK	THICKNESS	
TLT	TOILET	
TMH	TOP OF MANHOLE	
TOB	TOP OF BEAM	
TOC	TOP OF CURB	
TOF	TOP OF FOOTING	
TOG	TOP OF GRADE	
TOJ	TOP OF JOIST	
TOL	TOLERANCE	
TOM	TOP OF MASONRY	
TOS	TOP OF STEEL	
TOW	TOP OF WALL	
TTD	TOILET TISSUE DISPENSER	
TRANS	TRANSPARENT	
TRTD	TREATED	
TS	TUBE STEEL	
TYP	TYPICAL	
T&G	TONGUE AND GROOVE	
U		
UBC	UNIFORM BUILDING CODE	
UL	UNDERWRITERS LABORATORIES, INC	
ULT	ULTIMATE	
UNO	UNLESS NOTED OTHERWISE	
UON	UNLESS OTHERWISE NOTED	
V		
VAR	VARIES	
VERT	VERTICAL	
W		
W	WEST	
WLD	WELDED	
WP	WORK POINT	
WWF	WELDED WIRE FABRIC	
W/	WITH	
W/O	WITHOUT	
W/W	WALL TO WALL	
X		
XFMR	TRANSFORMER	
Y		
NOT USED		
Z		
NOT USED		

GENERAL DRAWING LEGEND

ROOM NAME / 0000 — ROOM NAME / ROOM NUMBER	NEW DOOR
00 — FURNISHINGS/EQUIPMENT	
# — KEY NOTE	EXISTING DOOR
# — KEY DEMOLITION NOTE	PLAN NORTH ARROW
0 — REVISION	TRUE NORTH
	PLAN NORTH
10 — STRUCTURAL COLUMN LINE	XX/XXXX — ELEVATION MARK
DATUM ELEVATION (EXISTING)	XX / XXXX — SECTION MARK
DATUM ELEVATION (NEW)	XX/XXXX
BREAK LINE	
CENTER LINE	XX/XXXX — PLAN DETAIL MARK
MATCH/DIVIDE LINE	
NOT IN SCOPE	A1 TITLE 1/8" = 1'-0" — DRAWING TITLE
	SHEET NUMBER WHERE REFERENCED / REFERENCE NUMBER

SHEET IDENTIFICATION FORMAT

AANNN

- AA — DISCIPLINE DESIGNATOR
- NNN — SHEET SEQUENCE NUMBER
- A — SHEET TYPE DESIGNATOR (SEE BELOW)

SHEET TYPE DESIGNATORS

0	GENERAL (COVER SHEETS, INDEX, SYMBOLS LEGEND, NOTES, ETC.)
1	PLANS (HORIZONTAL VIEWS)
2	ELEVATIONS (VERTICAL VIEWS)
3	SECTIONS (SECTIONAL VIEWS)
4	LARGE SCALE VIEWS (ENLARGED PLANS, ELEVATIONS, OR SECTIONS THAT ARE NOT DETAILS)
5	DETAILS
6	SCHEDULES AND DIAGRAMS
7	USER DEFINED (FOR TYPES THAT DO NOT FALL IN OTHER CATEGORIES)
8	USER DEFINED (FOR TYPES THAT DO NOT FALL IN OTHER CATEGORIES)
9	3D REPRESENTATIONS (ISOMETRICS, PERSPECTIVES, PHOTOGRAPHS)

Parkhill

THIS DOCUMENT IS RELEASED ON 06-27-2023 FOR THE PURPOSE OF INTERIM REVIEW UNDER THE AUTHORITY OF JESSE N. BERNARD, R.A. TEXAS LICENSE #29194. IT IS NOT TO BE USED FOR REGULATORY APPROVAL, CONSTRUCTION, BIDDING OR PERMIT PURPOSES. PARKHILL, SMITH & COOPER, INC.

Parkhill.com

Citizen Collection Stations

City of Midland

MIDLAND — Fuel the Energy!

CLIENT
City of Midland

300 North Loraine
Midland, TX

PROJECT NO.
6119.21 - WEST
40015.22 - NORTH

#	DATE	DESCRIPTION
-	06/27/2023	City Council Review

Symbols, Legends & Abbreviations

G-011

6/26/2023 1:33:30 PM

PACKET 6.404 July 11, 2023

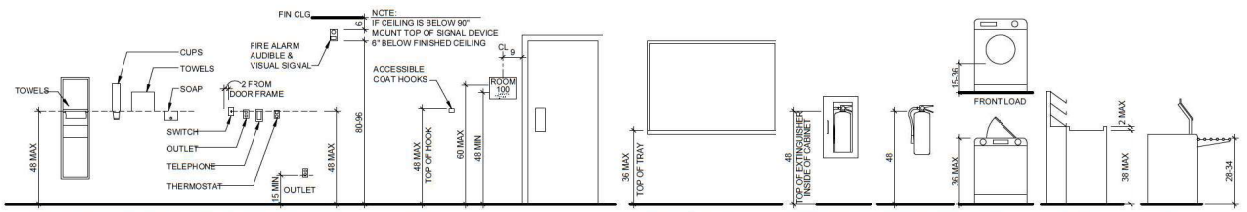

STANDARD ACCESSIBLE MOUNTING HEIGHTS

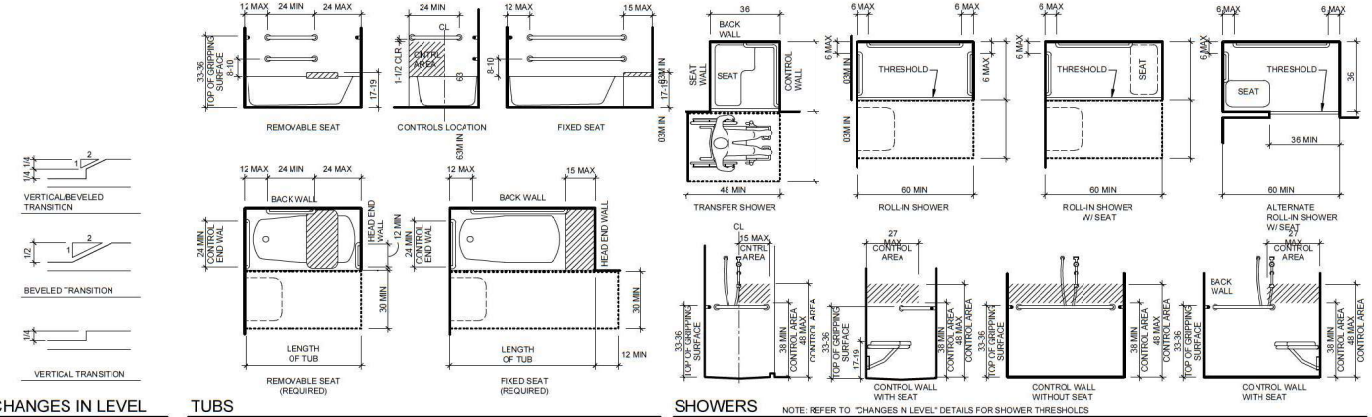

CHANGES IN LEVEL TUBS SHOWERS

NOTE: REFER TO "CHANGES N LEVEL" DETAILS FOR SHOWER THRESHOLDS

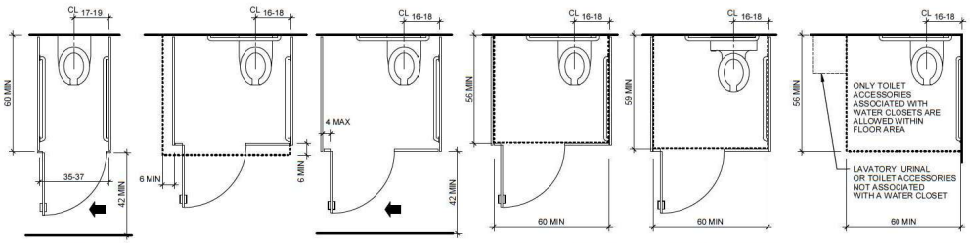

TYPICAL TOILET STALLS

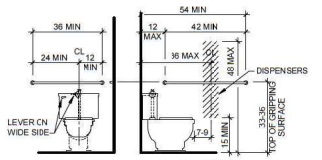

TYPICAL WATER CLOSETS

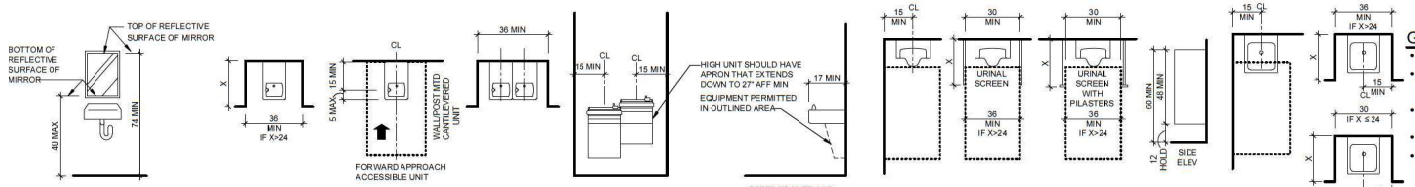

REFLECTIVE SURFACE EWC/DRINKING FOUNTAINS URINALS LAVATORIES

GENERAL NOTES

- ACCESSIBILITY GUIDELINE SHEETS ARE BASED ON THE 2012 TEXAS ACCESSIBILITY STANDARDS (TAS).
- ACCESSIBILITY GUIDELINE SHEETS ARE FOR INFORMATIONAL PURPOSES ONLY, AND INTENDED TO SERVE AS A GUIDE FOR CONSTRUCTION PROFESSIONALS AND OWNERS.
- SOME OF THE INFORMATION AND PICTOGRAPHS SHOWN MAY NOT EE APPLICABLE TO THIS PROJECT.
- REFER TO PLUMBING SHEETS FOR PLUMBING FIXTURE MOUNTING HEIGHTS.
- GRAPHICS SHOWN ARE FOR ADULTS.

Parkhill

THIS DOCUMENT IS RELEASED ON 06-27-2023 FOR THE PURPOSE OF INTERIM REVIEW UNDER THE AUTHORITY OF JESSE N. BERNARD, R.A. TEXAS LICENSE #29194. IT IS NOT TO BE USED FOR REGULATORY APPROVAL, CONSTRUCTION, BIDDING OR PERMIT PURPOSES. PARKHILL, SMITH & COOPER, INC.

Parkhill.com

Citizen Collection Stations

City of Midland

MIDLAND Fuel the Energy!

CLIENT
City of Midland

300 North Loraine
Midland, TX

PROJECT NO.
6119.21 - WEST
40015.22 - NORTH

#	DATE	DESCRIPTION
-	06/27/2023	City Council Review

Accessibility Standards

G-021

6/26/2023 1:33:31 PM

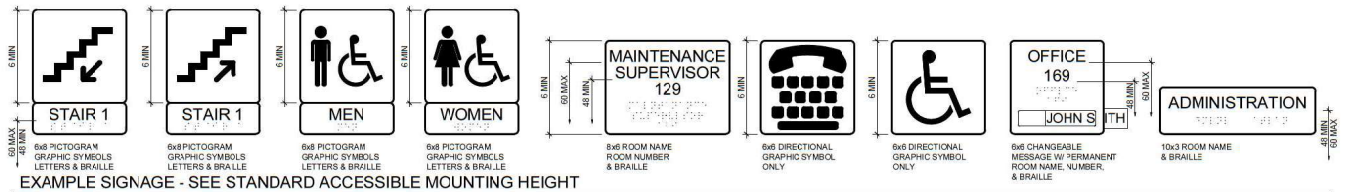

EXAMPLE SIGNAGE - SEE STANDARD ACCESSIBLE MOUNTING HEIGHT

REFER TO SIGNAGE PACKAGE OR DETAILS FOR ACTUAL SIGNAGE SPECIFIED

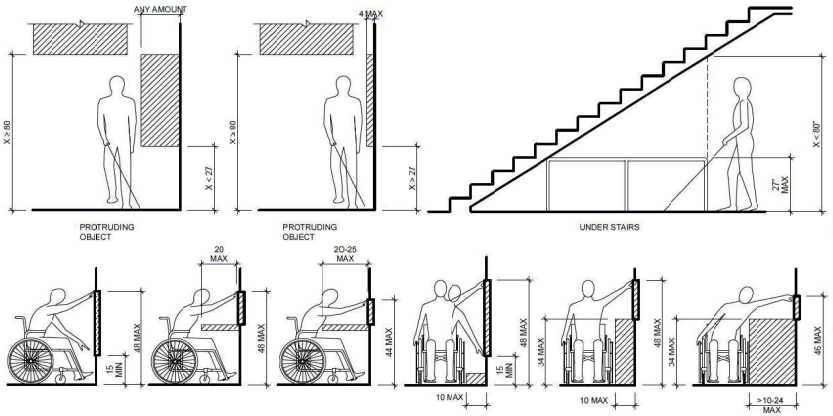

PROTRUDING OBJECT PROTECTION/REACH RANGES

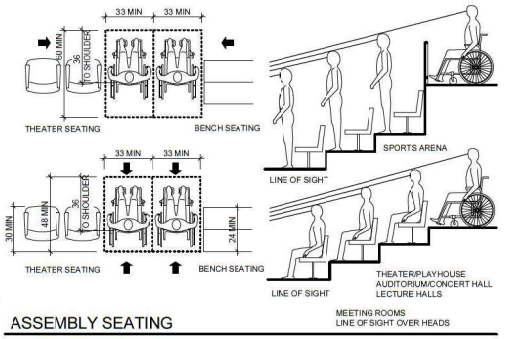

ASSEMBLY SEATING

CHILDREN'S MOUNTING HEIGHTS & REACH RANGES	AGES: 3 AND 4	AGES: 5 THROUGH 8	AGES: 9 THROUGH 12
REACH RANGES			
HIGH	36	40	44
LOW	20	18	16
RAMPS AND STAIRS			
TOP OF HANDRAIL GRIPPING SURFACE	28 MAX	28 MAX	28 MAX
WATER CLOSETS			
WATER CLOSET CENTERLINE	12	12-15	15-18
GRAB BARS	18-20	20-25	25-27
DISPENSER HEIGHT	14	14-17	17-19
FIXED OR BUILT-IN SEATING AND TABLES, READING AND STUDY AREAS, AND WORK STATIONS	AGES: 5 & YOUNGER	AGES: 6-12	
HEIGHT OF TABLES OR COUNTERS		26-30 MAX	
KNEE CLEARANCE	PARALLEL APPROACH ALLOWED	24 MIN	

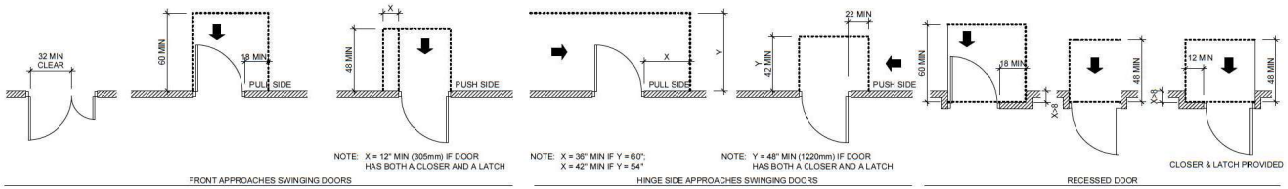

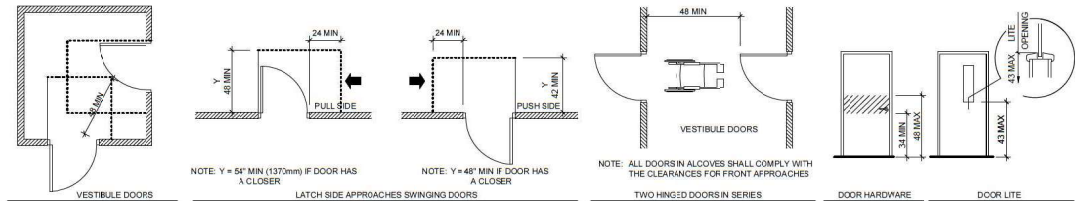

TYPICAL DOOR CLEARANCES

GENERAL NOTES

- ACCESSIBILITY GUIDELINE SHEETS ARE BASED ON THE 2012 TEXAS ACCESSIBILITY STANDARDS (TAS).
- ACCESSIBILITY GUIDELINE SHEETS ARE FOR INFORMATIONAL PURPOSES ONLY, AND INTENDED TO SERVE AS A GUIDE FOR CONSTRUCTION PROFESSIONALS AND OWNERS.
- SOME OF THE INFORMATION AND PICTOGRAPHS SHOWN MAY NOT BE APPLICABLE TO THIS PROJECT.
- REFER TO PLUMBING SHEETS FOR PLUMBING FIXTURE MOUNTING HEIGHTS.
- GRAPHICS SHOWN ARE FOR ADULTS.

Parkhill

THIS DOCUMENT IS RELEASED ON 06-27-2023 FOR THE PURPOSE OF INTERIM REVIEW UNDER THE AUTHORITY OF JESSE N. BERNARD, R.A., TEXAS LICENSE #29194. IT IS NOT TO BE USED FOR REGULATORY APPROVAL, CONSTRUCTION, BIDDING OR PERMIT PURPOSES. PARKHILL, SMITH & COOPER, INC.

Parkhill.com

Citizen Collection Stations

City of Midland

MIDLAND Fuel the Energy!

CLIENT
City of Midland

300 North Loraine
Midland, TX

PROJECT NO.
6119.21 - WEST
40015.22 - NORTH

#	DATE	DESCRIPTION
-	06/27/2023	City Council Review

Accessibility Standards

G-022

6/26/2023 1:33:31 PM

PACKET 6.406 July 11, 2023

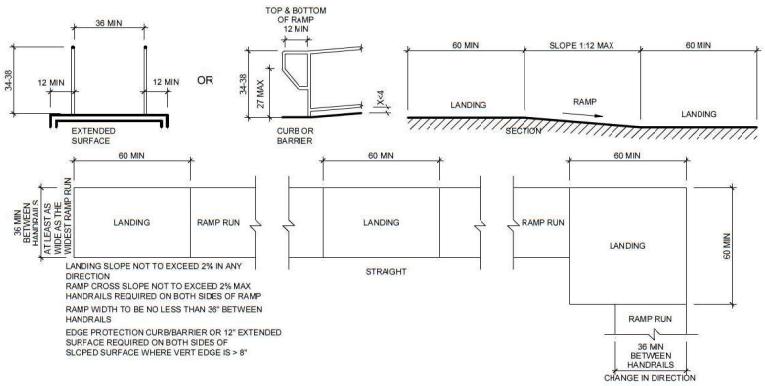

ACCESSIBLE RAMP

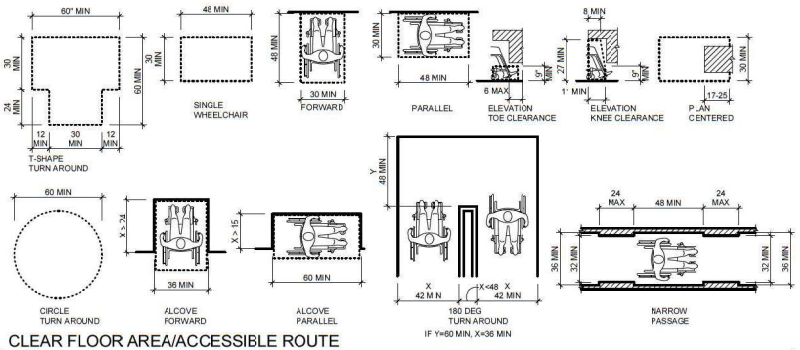

CLEAR FLOOR AREA/ACCESSIBLE ROUTE

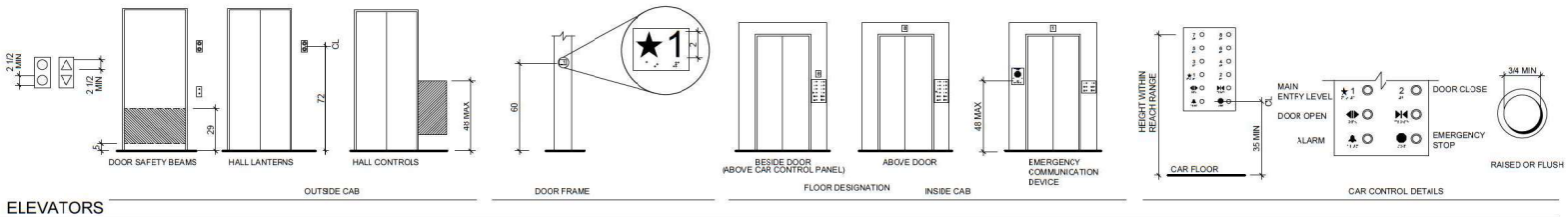

ELEVATORS

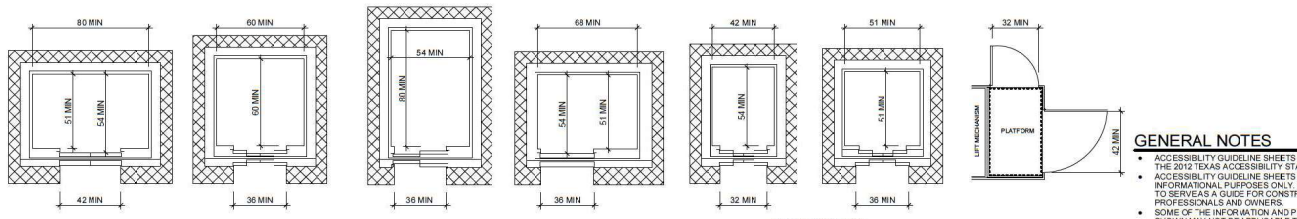

ELEVATORS LULA LIFTS

GENERAL NOTES

- ACCESSIBILITY GUIDELINE SHEETS ARE BASED ON THE 2012 TEXAS ACCESSIBILITY STANDARDS (TAS).
- ACCESSIBILITY GUIDELINE SHEETS ARE FOR INFORMATIONAL PURPOSES ONLY, AND INTENDED TO SERVEAS A GUIDE FOR CONSTRUCTION PROFESSIONALS AND OWNERS.
- SOME OF THE INFORMATION AND PICTOGRAPHS SHOWN MAY NOT BEAPPLICABLE TO THIS PROJECT.
- REFER TO PLUMBING SHEETS FOR PLUMBING FIXTURE MOUNTING HEIGHTS.
- GRAPHICS SHOWN ARE FOR ACULTS.

Parkhill

THIS DOCUMENT IS RELEASED ON 06-27-2023 FOR THE PURPOSE OF INTERIM REVIEW UNDER THE ALTHORITY OF JESSE N. BERNARD, R.A. TEXAS LICENSE #29194. IT IS NOT TO BE USED FOR REGULATORY APPROVAL, CONSTRUCTION, BIDDING OR PERMIT PURPOSES. PARKHILL, SMITH & COOPER, INC.

Parkhill.com

Citizen Collection Stations

City of Midland

MIDLAND Fuel the Energy!

CLIENT
City of Midland

300 North Loraine
Midland, TX

PROJECT NO.
6119.21 - WEST
40015.22 - NORTH

#	DATE	DESCRIPTION
-	06/27/2023	City Council Review

Accessibility Standards

G-023

6/26/2023 1:33:32 PM

PACKET 6.407 July 11, 2023

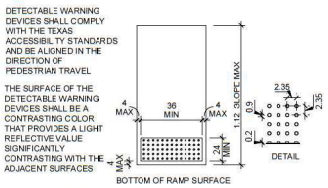

CURB RAMPS

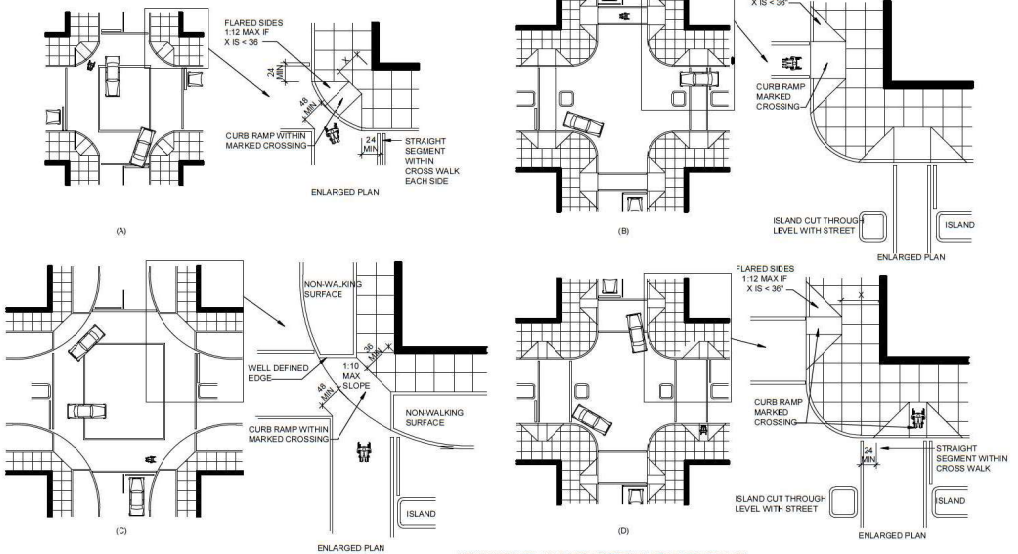

CURB RAMPS AT MARKED CROSSINGS

WITHIN CURB RAMP AND FLARES, THERE SHALL BE NO LIGHT OR SIGNAL POLES, SIGNAL BOXES, VALVE BOX COVERS, OR THE LIKE

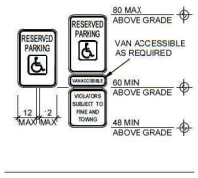

ACCESSIBLE PARKING SIGNAGE

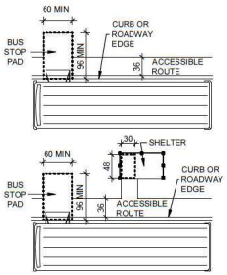

BUS STOPS

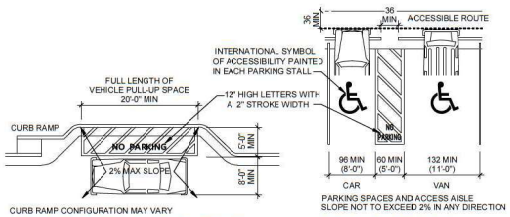

PASSENGER LOADING ZONE

PARKING SPACES

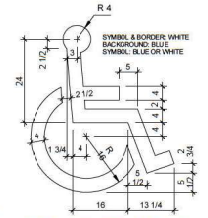

ACCESSIBILITY SYMBOL

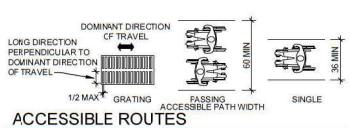

ACCESSIBLE ROUTES

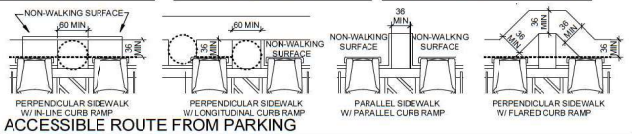

ACCESSIBLE ROUTE FROM PARKING

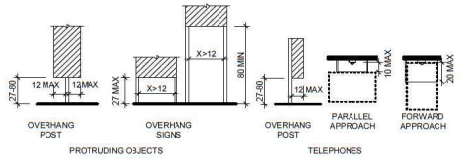

PROTRUDING OBJECTS/TELEPHONES

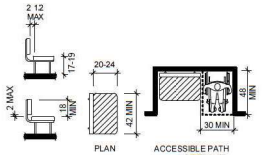

ACCESSIBLE SEATING

GENERAL NOTES

- ACCESSIBILITY GUIDELINE SHEETS ARE BASED ON THE 2012 TEXAS ACCESSIBILITY STANDARDS (TAS).
- ACCESSIBILITY GUIDELINE SHEETS ARE FOR INFORMATIONAL PURPOSES ONLY, AND INTENDED TO SERVE AS A GUIDE FOR CONSTRUCTION PROFESSIONALS AND OWNERS.
- SOME OF THE INFORMATION AND PICTOGRAPHS SHOWN MAY NOT BE APPLICABLE TO THIS PROJECT.
- REFER TO PLUMBING SHEETS FOR PLUMBING FIXTURE MOUNTING HEIGHTS.
- GRAPHICS SHOWNARE FOR ADULTS.

Parkhill

THIS DOCUMENT IS RELEASED ON 06-27-2023 FOR THE PURPOSE OF INTERIM REVIEW UNDER THE AUTHORITY OF JESSE N. BERNARD, R.A. TEXAS LICENSE #29194. IT IS NOT TO BE USED FOR REGULATORY APPROVAL, CONSTRUCTION, BIDDING OR PERMIT PURPOSES. PARKHILL, SMITH & COOPER, INC.

Parkhill.com

Citizen Collection Stations

City of Midland

MIDLAND Fuel the Energy!

CLIENT
City of Midland

300 North Loraine
Midland, TX

PROJECT NO.
6119.21 - WEST
40015.22 - NORTH

#	DATE	DESCRIPTION
-	06/27/2023	City Council Review

Accessibility Standards

G-024

6/26/2023 1:33:32 PM

PACKET 6.408 July 11, 2023

LEGEND

EXIT — EGRESS EXIT REQUIRED

EGRESS PATH, TRAVEL DISTANCE AND COMMON PATH

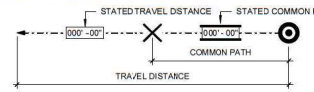

ABBREVIATIONS

200'	DISTANCE BETWEEN EXITS
EW=36"	EXIT WIDTH PROVIDED AT SPECIFIC EXIT
GSF	GROSS SQUARE FOOT
NSF	NET SQUARE FOOT
FEC	FIRE EXTINGUISHER CABINET
TD	TRAVEL DISTANCE
CPOT	COMMON PATH OF TRAVEL
(M)DBE	(MINIMUM) DISTANCE BETWEEN EXITS
OL	OCCUPANT LOAD

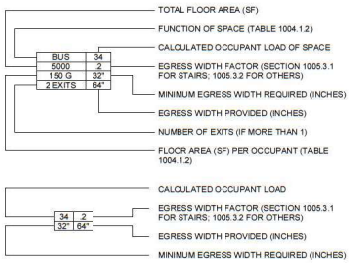

OCCUPANT LOAD TABLE (2018, 2021)

FUNCTION OF SPACE (1004.5)	OCC PER SF
ACCESSORY STORAGE AREAS, MECHANICAL EQUIPMENT ROOM	300 GROSS
AGRICULTURE BUILDING	300 GROSS
AIRCRAFT HANGAR	500 GROSS
AIRPORT TERMINAL	
BAGGAGE CLAIM	20 GROSS
BAGGAGE HANDLING	300 GROSS
CONCOURSE	100 GROSS
WAITING AREAS	15 GROSS
ASSEMBLY	
GAMING FLOORS (KENO, SLOTS, ETC.)	11 GROSS
EXHIBIT GALLERY AND MUSEUM	30 NET
ASSEMBLY W/ FIXED SEATS	SEE SECTION 1004.6
ASSEMBLY W/O FIXED SEATS	
CONCENTRATED CHAIRS ONLY-NOT FIXED)	7 NET
STANDING SPACE	5 NET
UNCONCENTRATED (TABLES AND CHAIRS)	15 NET
BOWLING CENTERS, ALLOW 5 PERSONS FOR EACH LANE INCLUDING 15 FEET OF RUNWAY, AND FOR ADDITIONAL AREAS	7 NET
BUSINESS AREAS	150 GROSS
CONCENTRATED BUSINESS USE AREA	SEE SECTION 1004.8
COURT ROOMS-OTHER THAN FIXED SEATING AREAS	40 NET
DAY CARE	35 NET
DORMITORIES	50 GROSS
EDUCATIONAL	
CLASSROOM AREA	20 NET
SHOPS AND OTHER VOCATIONAL ROOM AREAS	50 NET
EXERCISE ROOMS	50 GROSS
H-5 FABRICATION AND MANUFACTURING AREAS	200 GROSS
INDUSTRIAL	100 GROSS
INSTITUTIONAL AREAS	
INPATIENT TREATMENT AREAS	240 GROSS
OUTPATIENT AREAS	100 GROSS
SLEEPING AREAS	120 GROSS
KITCHENS, COMMERCIAL	200 GROSS
LIBRARY	
READING ROOM	50 NET
STACK AREA	100 GROSS
LOCKER ROOMS	50 GROSS
MALL BUILDINGS - COVERED AND OPEN	SEE SECTION 402.8.2
MERCANTILE	
AREAS ON OTHER FLOORS	60 GROSS
STORAGE, STOCK, SHIPPING AREAS	300 GROSS
PARKING GARAGES	200 GROSS
RESIDENTIAL	200 GROSS
SKATING RINKS, SWIMMING POOLS	
RINK AND POOL	50 GROSS
DECKS	15 GROSS
STAGES AND PLATFORMS	15 NET
WAREHOUSES	500 GROSS

GENERAL CONSTRUCTION INFORMATION

APPLICABLE CODES:

BUILDING	IBC 2018
PLUMBING	IPC 2018
MECHANICAL	IMC 2018
ELECTRICAL	NEC 2017
FIRE	IFC 2015
ENERGY	IECC 2015
ACCESSIBILITY	2010 TAS
OTHER	-

PLUMBING FIXTURE RQMTS - IPC

IPC 2018 - TABLE 403.1

BUSINESS OCCUPATION LOAD - 7
STORAGE OCCUPATION LOAD - 8

	WATER CLOSETS		LAVATORIES		DRINK. FOUNT.	SERVICE SINK
	MALE	FEMALE	MALE	FEMALE		
BUS	0.16	0.16	0.1	0.1	0.07	1
SR/MR	0.04	0.04	0.04	0.04	0.08	1
TOTAL REQ'D	1	1	1	1		1
PROVID.	1	1	1	1		1

GENERAL NOTES

1. UL ASSEMBLIES INDICATED ESTABLISH BASIS PERFORMANCE. OTHER ASSEMBLIES MAY BE CONSIDERED AT DISCRETION OF ARCHITECT IF EQUIVALENT PERFORMANCE IS PROVIDED. SUBSTITUTION PROPOSALS SHALL INCLUDE CHANGES REQUIRED TO COMPONENTS OF ASSEMBLY.
2. RATED ASSEMBLIES TO BE IDENTIFIED ABOVE CEILING AS REQUIRED BY LOCAL CODE AND THE AHJ.
3. FIRE EXTINGUISHERS, (IFC SECTION 906 AND NFPA 10; CHAPTER 6 AND TABLE 6.2.1.1)
   A. BUSINESS OCCUPANCY
      a. CLASS A - LIGHT HAZARD OCCUPANCY
      b. MAXIMUM FLOOR AREA FOR UNIT - 11,250 SF
      c. MAXIMUM TRAVEL DISTANCE TO EXTINGUISHER - 75 FT.

BUILDING ENVELOPE REQUIREMENTS

CLIMATE ZONE: 3B

BUILDING ENVELOPE OPAQUE ELEMENTS

ROOFS	
INSULATION ENTIRELY ABOVE ROOF DECK	R-25ci
METAL BUILDINGS	R-19 + R-11 LS
ATTIC AND OTHER	R-38
WALLS, ABOVE GRADE	
MASS	R-7.6ci
METAL BUILDINGS	R-13 + R-6.5ci
METAL FRAMED	R-13 + R-7.5ci
WOOD FRAMED AND OTHER	R-13 + R-3.8ci OR R-20
WALLS, BELOW GRADE	
BELOW-GRADE WALL	NR
FLOORS	
MASS	R-10ci
JOISTS/FRAMING	R-30
SLAB-ON-GRADE FLOORS	
UNHEATED SLABS	NR
HEATED SLABS	R-10 FOR 24" BELOW
OPAQUE DOORS	
NONSWINGING	R-4.75

NOTES

1. 'ci' REPRESENTS CONTINUOUS INSULATION
2. 'OPAQUE DOOR' REPRESENTS DOORS HAVING LESS THAN 50% GLASS AREA.

BUILDING ENVELOPE FENESTRATION

VERTICAL FENESTRATION		
U-FACTOR		
FIXED FENESTRATION	U-0.46	
OPERABLE FENESTRATION	U-0.60	
ENTRANCE DOORS	U-0.77	
SHGC		
ORIENTATION	SEW	N
PF < 0.2	0.25	0.33
0.2 ≤ PF < 0.5	0.30	0.37
PF ≥ 0.5	0.40	0.40
SKYLIGHTS		
U-FACTOR	U-0.55	
SHGC	0.35	

FIRE PROTECTION RQMTS (TAB 601)

CONSTRUCTION TYPE: TYPE II-B
AUTOMATIC FIRE SPRINKLER SYSTEM: NO

BULDING ELEMENT PROTECTION	
PRIMARY STRUCTURAL FRAME (SEE SECTION 202)	0 HOUR(S)
BEARING WALLS	
EXTERIOR	0 HOUR(S)
INTERIOR	0 HOUR(S)
NONBEARING WALLS AND PARTITIONS (TABLE 602)	
EXTERIOR	0 HOUR(S)
NONBEARING WALLS AND PARTITIONS	
INTERIOR	0 HOUR(S)
FLOOR CONSTRUCTION AND ASSOCIATED SECONDARY MEMBERS (SEE SECTION 202)	0 HOUR(S)
ROOF CONSTRUCTION AND ASSOCATED SECONDARY MEMBERS (SEE SECTION 202)	0 HOUR(S)

PERIMETER CONTAINMENT	
METAL STUD FLY BY	SYSTEM
METAL STUD BEARING	SYSTEM
CURTAINWALL	SYSTEM
STOREFRONT	SYSTEM

EGRESS

TOTAL OCCUPANT LOAD FOR THE BUILDING	15
TOTAL OCCUPANT LOAD EGRESS WILL ACCOMMODATE	920
REQUIRED CAPACITY BASED ON OCCUPANT LOAD (IN)	
15 x 0.3 (SECTION 1005.3.1 STAIRWAYS)	4.5 INCHES
15 x 0.2 (SECTION 1005.3.2 OTHER EGRESS COMPONENTS)	3 INCHES
PROVIDED CAPACITY (INCHES)	
STAIRWAYS	38 INCHES
OTHER EGRESS COMPONENTS	184 INCHES

MAXIMUM ALLOWABLE TRAVEL DISTANCE	125 FEET
LONGEST TRAVEL DISTANCE	55 FEET

MAXIMUM DEAD END LIMIT	20 FEET
MAXIMUM DEAD END LIMIT PROVIDED	0 FEET

COMMON PATH OF EGRESS TRAVEL	100 FEET
COMMON PATH OF EGRESS TRAVEL, PROVIDED	12.25 FEET

TWO EXITS REQUIRED WHERE OCCUPANT LOAD EXCEEDS	50

MINIMUM NUMBER OF EXITS FOR OCCUPANT LOAD	
1-500	2 EXITS
501-1000	3 EXITS
MORE THAN 1000	4 EXITS

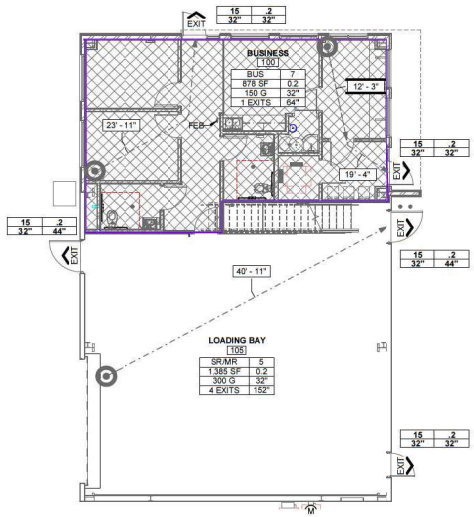

A1 FIRST FLOOR - LIFE SAFETY PLAN
1/8" = 1'-0"
0 4' 8' 16'

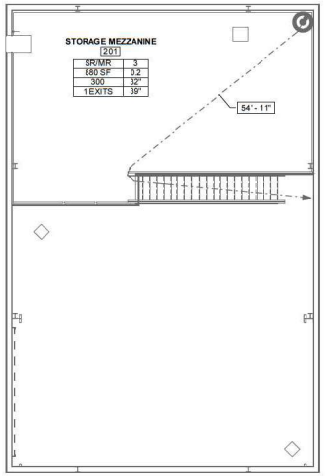

A2 MEZZANINE FLOOR - LIFE SAFETY PLAN
1/8" = 1'-0"
0 4' 8' 16'

Parkhill

THIS DOCUMENT IS RELEASED ON 06-27-2023 FOR THE PURPOSE OF INTERIM REVIEW UNDER THE AUTHORITY OF JESSE N. BERNARD, R.A., TEXAS LICENSE #29194. IT IS NOT TO BE USED FOR REGULATORY APPROVAL, CONSTRUCTION, BIDDING OR PERMIT PURPOSES. PARKHILL, SMITH & COOPER, INC.

Parkhill.com

Citizen Collection Stations
City of Midland

MIDLAND Fuel the Energy!

CLIENT
City of Midland
300 North Loraine
Midland, TX

PROJECT NO.
6119.21 - WEST
40015.22 - NORTH

#	DATE	DESCRIPTION
-	06/27/2023	City Council Review

Code Information

G-101

6/26/2023 1:33:35 PM

PACKET 6.409 July 11, 2023

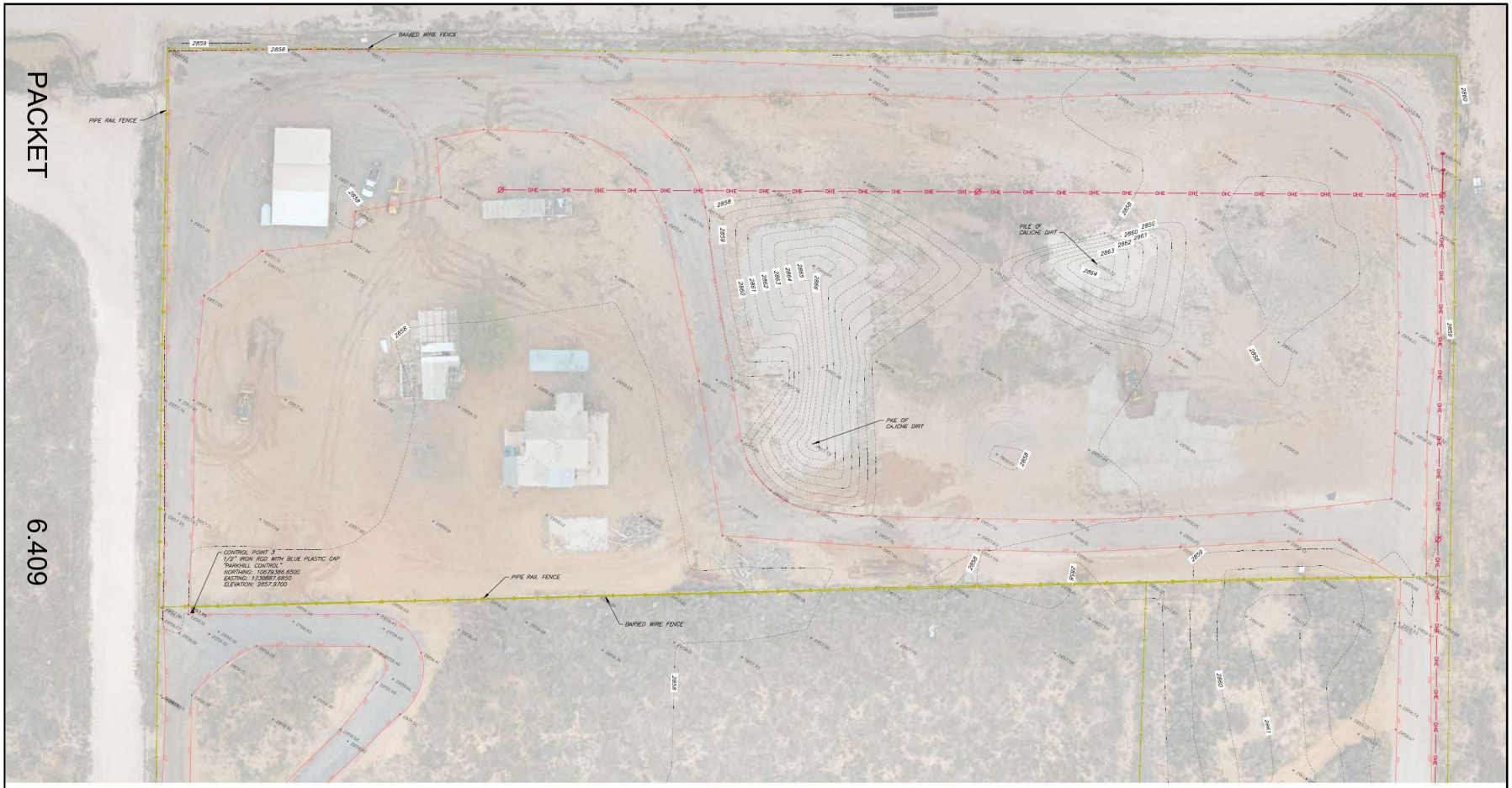

AERIAL IMAGERY SHOWN ON THIS PLAT WAS CAPTURED BY PARKHILL ON DECEMBER 21, 2022 AND WAS TIED TO THE GROUND CONTROL POINTS BASED ON THE SURVEY. IT IS SHOWN FOR CONTEXT AND SHOULD NOT REPLACE THE FIELD MEASUREMENTS OF PHYSICAL IMPROVEMENTS.

SURVEY CONTROL POINTS				
POINT	NORTHING	EASTING	ELEVATION	DESCRIPTION
10PUS	10,679,386.65	1,730,887.69	2,857.97	CP 1/2 IRBC PSC CONTROL
3	10,680,335.24	1,729,865.19	2,858.24	CP 1/2 IRBC PSC CONTROL

TEXAS COORDINATE SYSTEM OF 1983 (NAD'83), TEXAS CENTRAL 4205, ELEVATIONS ARE BASED ON NAVD'88

SCALE: 1" = 30'

LEGEND

- TRANSFORMER POLE
- POWER POLE
- GUY POLE
- DOWN GUY
- CONTROL POINT
- GAS LINE
- OHE — POWER OVERHEAD
- ASPHALT PAVEMENT
- BARBED WIRE FENCE
- PIPE RAIL FENCE
- 1' CONTOUR LINE



VICINITY MAP
(NOT TO SCALE)

SURVEYOR'S REPORT:

1. BEARINGS AND COORDINATES SHOWN HEREON ARE BASED ON THE TEXAS STATE PLANE COORDINATE SYSTEM, CENTRAL ZONE 4205, NAD83.
   CONVERGENCE ANGLE: -0°36'21.85"
   COMBINED SCALE FACTOR: 0.99988706.
2. DISTANCES REPORTED HEREON ARE AT GRID.
3. AREAS REPORTED HEREON ARE BASED ON CALCULATIONS MADE FROM GRID DISTANCES.
4. THIS SURVEY IS SUBJECT TO ANY FACTS WHICH MAY BE DISCLOSED BY A FULL AND ACCURATE TITLE SEARCH. THERE MAY BE EASEMENTS, RESTRICTIONS, AND/OR COVENANTS AFFECTING THIS PROPERTY, NOT SHOWN HEREON.
5. LOCATION OF UNDERGROUND UTILITIES ARE DETERMINED FROM SURFACE EVIDENCE AND/OR REPORTED LOCATION AND MAY OR MAY NOT CORRECTLY INDICATE THE ACTUAL LOCATION OR EXISTENCE OF THOSE UTILITIES. UTILITY REQUESTS WERE NOT MADE TO TEXAS 811. ADDITIONAL UTILITIES MAY EXIST WHICH THIS SURVEY DOES NOT INDICATE.
6. THIS PLAT IS INVALID UNLESS IT BEARS THE SURVEYOR'S ORIGINAL SEAL AND SIGNATURE.
7. THIS IS NOT A BOUNDARY SURVEY.

STATE OF TEXAS REGISTERED FRANKLIN A. LEAMONS 6889 PROFESSIONAL LAND SURVEYOR

I, THE UNDERSIGNED, DO HEREBY CERTIFY THAT THE PLAT AS SHOWN HEREON WAS PREPARED FROM AN ON-THE-GROUND SURVEY PERFORMED BY ME OR UNDER MY SUPERVISION AND COMPLETED ON JANUARY 6, 2023. NO WARRANTY IS MADE OR INTENDED FOR THE LOCATION OF ANY OR ALL EASEMENTS THAT MAY EXIST WITHIN THE BOUNDS OF THIS SURVEY.

Franklin Leamons — JUNE 13, 2023

FRANKLIN LEAMONS, R.P.L.S. 6889 — DATE

Parkhill

Parkhill.com

Citizen Collection Stations

City Of Midland

MIDLAND Feel the Energy!

CLIENT
City of Midland, Texas

300 N. Loraine
Midland, TX

PROJECT NO.
6119.21 - WEST
40015.22 - NORTH

#	DATE	DESCRIPTION
-	06/13/2023	Issue for Proposal

Topographic Survey

V-001

FILE NAME: W:\Sectors\Public Works - Surveying\Library\MIDLAND COUNTY\Midland Citizen Collection Center West\07-CAD\FALITOPO SURVEY 6-13-23\DS_611921_MID_WEST_CCS.dwg LAYOUT NAME: V-001 PRINTED: Tuesday, June 13, 2023 - 11:05am USER: lleamons

PACKET 6.410 July 11, 2023





VICINITY MAP
(NOT TO SCALE)

N

0' 60' 120'
SCALE: 1" = 60'

LEGEND:

- TRACT/PROPERTY LINES
- SECTION LINE
- EASEMENT LINE
- 1' CONTOUR LINE

SURVEYOR'S REPORT:

1. BEARINGS AND COORDINATES SHOWN HEREON ARE BASED ON THE TEXAS STATE PLANE COORDINATE SYSTEM, NORTH CENTRAL ZONE 4202, NAD83.
   CONVERGENCE ANGLE: -1°37'42.62"
   COMBINED SCALE FACTOR: 0.99987588
2. DISTANCES REPORTED HEREON ARE AT GRID.
3. AREAS REPORTED HEREON ARE BASED ON CALCULATIONS MADE FROM GRID DISTANCES.
4. THIS SURVEY IS SUBJECT TO ANY FACTS, WHICH MAY BE DISCLOSED BY A FULL AND ACCURATE TITLE SEARCH. THERE MAY BE EASEMENTS, RESTRICTIONS, AND/OR COVENANTS AFFECTING THIS PROPERTY, NOT SHOWN HEREON.
5. LOCATION OF UNDERGROUND UTILITIES ARE DETERMINED FROM SURFACE EVIDENCE AND/OR REPORTED LOCATION AND MAY OR MAY NOT CORRECTLY INDICATE THE ACTUAL LOCATION OR EXISTENCE OF THOSE UTILITIES. UTILITY REQUESTS WERE NOT MADE TO TEXAS 811. ADDITIONAL UTILITIES MAY EXIST WHICH THIS SURVEY DOES NOT INDICATE.
6. THIS PLAT IS INVALID UNLESS IT BEARS THE SURVEYOR'S ORIGINAL SEAL AND SIGNATURE.
7. THIS IS NOT A BOUNDARY SURVEY.

STATE OF TEXAS
FRANKLIN LEAMONS
6889
REGISTERED PROFESSIONAL LAND SURVEYOR

I, THE UNDERSIGNED, DO HEREBY CERTIFY THAT THE PLAT AS SHOWN HEREON WAS PREPARED FROM AN ON-THE-GROUND SURVEY PERFORMED BY ME OR UNDER MY SUPERVISION AND COMPLETED ON SEPTEMBER 27, 2022; NO WARRANTY IS MADE OR INTENDED FOR THE LOCATION OF ANY OR ALL EASEMENTS THAT MAY EXIST WITHIN THE BOUNDS OF THIS SURVEY.

Franklin Leamons — JUNE 13, 2023
FRANKLIN LEAMONS — DATE
R.P.L.S. 6889

SURVEY CONTROL POINTS				
POINT	NORTHING	EASTING	ELEVATION	DESCRIPTION
1	6,738,536.48	854,798.15	2,852.22	CP 1/2 IRBC CONTROL
2	6,741,110.84	857,620.71	2,843.26	CP 1/2 IRBC PSC CONTROL
3	6,739,051.12	854,826.23	2,851.71	CP 1/2 IRBC PSC CONTROL

TEXAS COORDINATE SYSTEM OF 1983 (NAD'83), TEXAS NORTH CENTRAL 4202, ELEVATIONS ARE BASED ON NAVD'88

AERIAL IMAGERY SHOWN ON THIS PLAT WAS CAPTURED BY PARKHILL ON DECEMBER 21, 2022 AND WAS TIED TO THE GROUND CONTROL POINTS BASED ON THE SURVEY. IT IS SHOWN FOR CONTEXT AND SHOULD NOT REPLACE THE FIELD MEASUREMENTS OF PHYSICAL IMPROVEMENTS.

Parkhill

Parkhill.com

Citizen Collection Stations

City Of Midland

MIDLAND
Fuel the Energy!

CLIENT
City of Midland, Texas

300 N. Loraine
Midland, TX

PROJECT NO.
6119.21 - WEST
40015.22 - NORTH

#	DATE	DESCRIPTION
-	06/13/2023	Issue for Proposal

Topographic Survey

V-002

FILE NAME: W:\Sectors\Public Works - Surveying\Library\MARTIN COUNTY\04 0015.22 Midland Citizen Collection Centers\07-CAD\FAL\2023-01-17_PARKHILL_SURVEY_FILES\DS_4001522_MID_CCS_NORTH.dwg LAYOUT NAME: V-002 PRINTED: Tuesday, June 13, 2023 - 10:15am USER: tleamons

PACKET 6.411

July 11, 2023

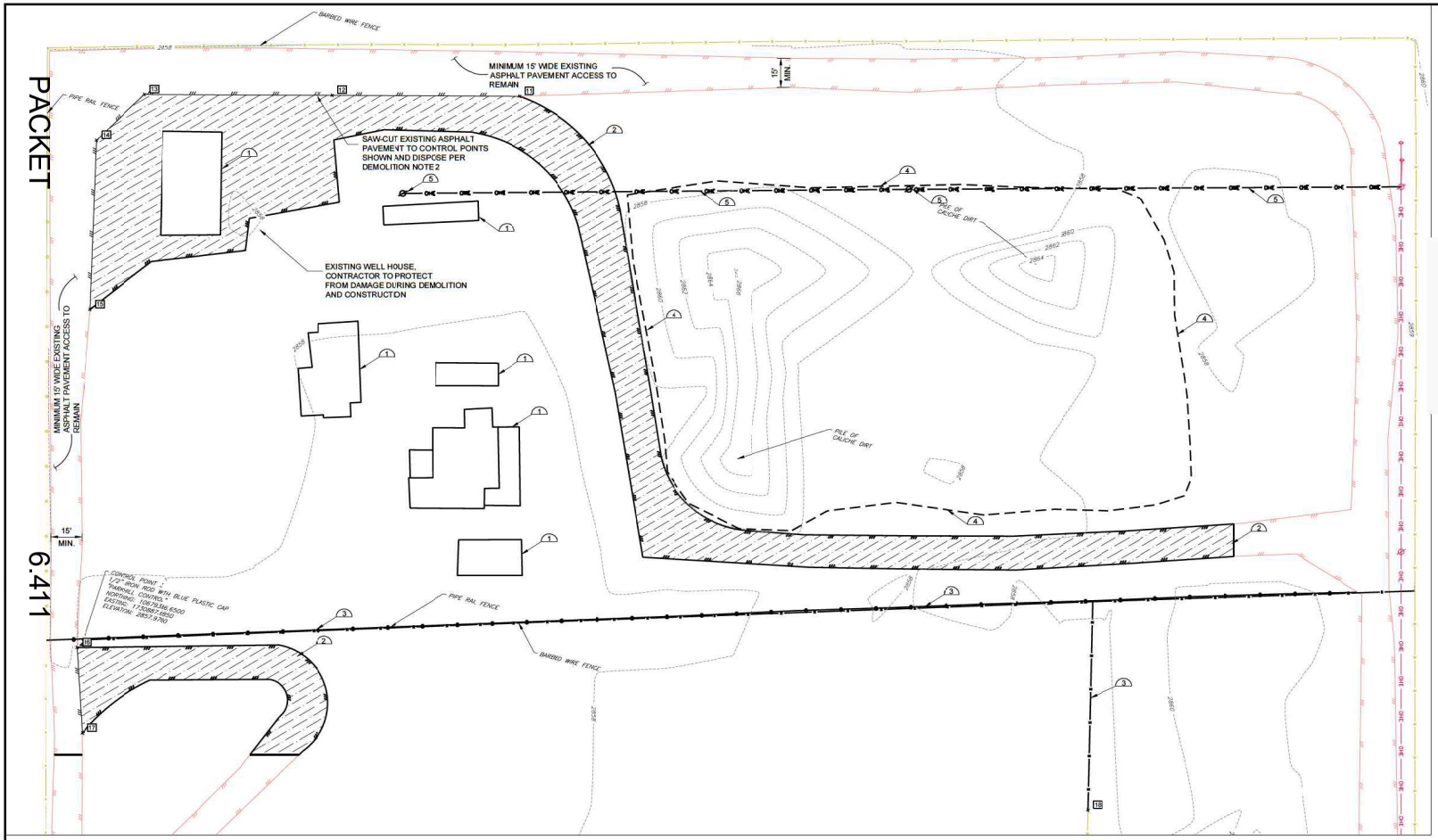

CONTROL POINT TABLE				
POINT #	NORTHING	EASTING	ELEVATION	DESCRIPTION
11	10680681.73	1730021.57	2857.13	SAW-CUT EDGE
12	10680657.06	1729922.95	2857.21	SAW-CUT EDGE
13	10680632.39	1729824.34	2857.30	SAW-CUT EDGE
14	10680601.88	1729805.34	2857.21	SAW-CUT EDGE
15	10680512.22	1729824.60	2857.66	SAW-CUT EDGE
16	10680333.08	1729863.05	2858.01	SAW-CUT EDGE
17	10680288.86	1729877.19	2858.30	SAW-CUT EDGE
18	10680383.13	1730415.11	2857.58	FENCE LIMIT

DEMOLITION NOTES

REMOVE AND DISPOSE EXISTING CONSTRUCTION AS INDICATED BY: (#)

1. BUILDINGS, CONCRETE AND MISCELLANEOUS APPURTENANCES.
2. ASPHALT PAVEMENT.
3. FENCING, BARB WIRE AND PIPE RAIL.
4. STOCKPILE.
5. OVERHEAD ELECTRIC LINE AND POLES.

Parkhill

THIS DOCUMENT IS RELEASED ON 06/27/2023 FOR THE PURPOSE OF INTERIM REVIEW UNDER THE AUTHORITY OF SPENSER J. HARVEY, P.E., TEXAS LICENSE #138737. IT IS NOT TO BE USED FOR REGULATORY APPROVAL, CONSTRUCTION, BIDDING OR PERMIT PURPOSES. PARKHILL, SMITH & COOPER, INC. F-560

ISSUED FOR INFORMATIONAL PURPOSES ONLY

Parkhill.com

Citizen Collection Stations

City Of Midland

MIDLAND Fuel the Energy!

CLIENT
City of Midland, Texas

300 N. Loraine
Midland, TX

PROJECT NO.
6119.21 - WEST
40015.22 - NORTH

#	DATE	DESCRIPTION
-	06/27/2023	City Council Review

West CCS Demolition Plan

C-001

FILE NAME: A:\2021\6119.21\03_DSGN\01_DWG\050_CIVIL\C-001-6119.21.dwg LAYOUT NAME: C-001 PRINTED: Monday, June 26, 2023 - 11:02am USER: SHarvey

PACKET 6.412 July 11, 2023

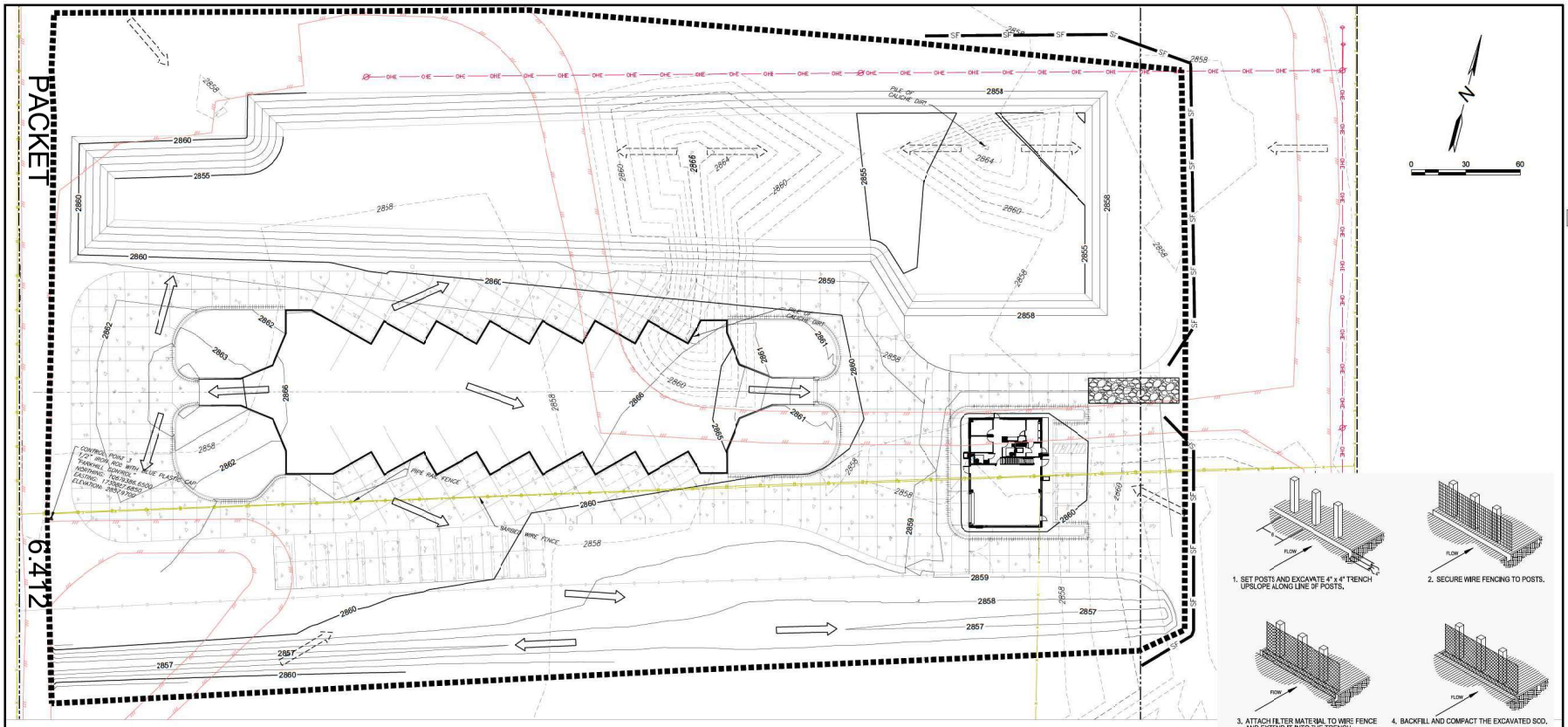

EROSION CONTROL NOTES

1. SILT FENCING OR TEMPORARY BERMS SHALL BE INSTALLED PRIOR TO START OF CONSTRUCTION.
2. TEMPORARY SWALES AND DESILTING BASINS WILL BE PLACED WHERE NECESSARY IN ORDER TO CONVEY STORMWATER RUN-OFF.
3. A STABILIZED CONSTRUCTION ENTRANCE WILL BE PROVIDED TO HELP REDUCE VEHICLE TRACKING OF SEDIMENTS. THE PAVED STREET ADJACENT TO THE SITE ENTRANCE WILL BE SWEPT DAILY TO REMOVE ANY EXCESS MUD. DIRT OR ROCK TRACKED FROM THE SITE.
4. THE CONTRACTOR SHALL BE RESPONSIBLE FOR INSURING THAT ALL EROSION CONTROL METHODS ARE INSPECTED ON A WEEKLY BASIS OR AFTER EVERY ERODIBLE RAINFALL (1/2"OR MORE). ANY NECESSARY REPAIRS OR CLEANUP TO MAINTAIN THE EFFECTIVENESS OF THE EROSION CONTROL SHALL BE MADE AT THAT TIME.
5. THIS DRAWING IS PART OF A TPDES CONSTRUCTION POLLUTION PREVENTION PLAN. PLEASE REFER TO TEXT PORTION OF THIS PLAN FOR ADDITIONAL REQUIREMENTS.

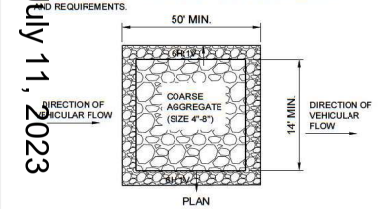

A1 STABILIZED CONSTRUCTION ENTRANCE (TxDOT TYPE 1)
NO SCALE

CWA MAINTENANCE NOTES

1. INSPECT BMPs EACH WORKDAY, AND MAINTAIN THEM IN EFFECTIVE OPERATING CONDITION. MAINTENANCE OF BMPs SHOULD BE PROACTIVE, NOT REACTIVE. INSPECT BMPs AS SOON AS POSSIBLE (AND ALWAYS WITHIN 24 HOURS) FOLLOWING A STORM THAT CAUSES SURFACE EROSION, AND PERFORM NECESSARY MAINTENANCE.
2. FREQUENT OBSERVATIONS AND MAINTENANCE ARE NECESSARY TO MAINTAIN BMPs IN EFFECTIVE OPERATING CONDITION. INSPECTIONS AND CORRECTIVE MEASURES SHOULD BE DOCUMENTED THOROUGHLY.
3. WHERE BMPs HAVE FAILED, REPAIR OR REPLACEMENT SHOULD BE INITIATED UPON DISCOVERY OF THE FAILURE.
4. THE CWA SHALL BE REPAIRED, CLEANED, OR ENLARGED AS NECESSARY TO MAINTAIN CAPACITY FOR CONCRETE WASTE. CONCRETE MATERIALS, ACCUMULATED IN PIT, SHALL BE REMOVED ONCE THE MATERIALS HAVE REACHED A DEPTH OF 2'.
5. CONCRETE WASHOUT WATER, WASTED PIECES OF CONCRETE AND ALL OTHER DEBRIS IN THE SUBSURFACE OF PIT SHALL BE TRANSPORTED FROM THE JOB SITE IN A WATER-TIGHT CONTAINER AND DISPOSED OF PROPERLY.
6. THE CWA SHALL REMAIN IN PLACE UNTIL ALL CONCRETE FOR THE PROJECT IS PLACED.
7. WHEN THE CWA IS REMOVED, COVER THE DISTURBED AREA WITH TOP SOIL, SEED AND MULCH OR OTHERWISE STABILIZED IN A MANNER APPROVED BY THE LOCAL JURISDICTION.

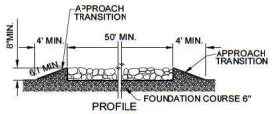

GENERAL NOTES

1. THE CONSTRUCTION ENTRANCE FOUNDATION COURSE SHALL BE FLEXIBLE BASE, BITUMINOUS CONCRETE, PORTLAND CEMENT CONCRETE OR OTHER MATERIAL AS APPROVED BY THE ENGINEER.
2. THE GUIDELINES SHOWN HEREON ARE SUGGESTIONS ONLY AND MAY BE MODIFIED BY THE ENGINEER.
3. CONTRACTOR TO COORDINATE WITH ENGINEER PRIOR TO CONSTRUCTION.
4. CONTRACTOR TO COORDINATE WITH OWNER THE LOCATION OF THE STAGING AREA AND CONCRETE WASHOUT AREA.

STABILIZED CONSTRUCTION NOTES

1. THE LENGTH OF THE TYPE 1 CONSTRUCTION EXIT SHALL BE AS INDICATED ON THE PLANS, BUT NOT LESS THAN 50'.
2. THE APPROACH SHOULD BE NO STEEPER THAN 6:1
3. THE CONSTRUCTION EXIT SHALL BE GRADED TO ALLOW DRAINAGE TO A SEDIMENT TRAPPING DEVICE.
4. USE 4"-8" STONE OR EQUIVALENT AT A MINIMUM DEPTH OF 12" FOR STABILIZED CONSTRUCTION ENTRANCE.
5. FILTER FABRIC SHOULD BE PLACED UNDERNEATH STONE OF CONSTRUCTION ENTRANCE TO REDUCE THE AMOUNT OF RUTTING AND TO PREVENT STONE FROM BEING EMBEDDED INTO THE SOIL.

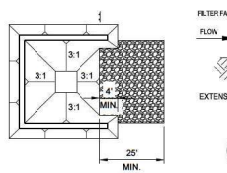

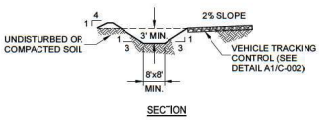

B3 CWA CONCRETE WASHOUT AREA
NO SCALE

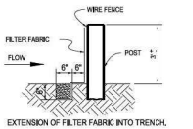

NOTES:

1. WOVEN WIRE FENCE TO BE FASTENED SECURELY TO FENCE POSTS WITH WIRE TIES OR STAPLES.
2. FILTER CLOTH TO BE FASTENED SECURELY TO WOVEN WIRE FENCE WITH TIES SPACED EVERY 24" AT THE TOP AND MIDSECTION.
3. WHEN TWO SECTIONS OF FILTER CLOTH ADJOIN EACH OTHER, THEY SHALL BE OVERLAPPED 6" AT THE POSTS AND FOLDED.
4. FENCE POSTS SHALL BE CAPABLE OF SUPPORTING FENCE AND MAY BE METAL OR WOOD.

B4 FILTER FABRIC BARRIER (SILT FENCE)
NO SCALE

ERCSION CONTROL LEGEND

1.5%	PROPOSED DRAINAGE PATH WITH PERCENT SLOPE
	STABILIZED CONSTRUCTION ENTRANCE, SEE DETAIL THIS SHEET
	EXISTING CONTOURS (1' INTERVAL)
	PROPOSED CONTOURS (1' INTERVAL)
	LIMITS OF DISTURBANCE (AREA AFFECTED BY PROJECT APPROX. 5.16 ACRES)
	FLOW DIRECTION (PROPOSED)
	FLOW DIRECTION (EXISTING)
SF	SILT FENCE, SEE DETAIL THIS SHEET

Parkhill

THIS DOCUMENT IS RELEASED ON 06/27/2023 FOR THE PURPOSE OF INTERIM REVIEW UNDER THE AUTHORITY OF SPENSER J. HARVEY, P.E., TEXAS LICENSE #138737. IT IS NOT TO BE USED FOR REGULATORY APPROVAL, CONSTRUCTION, BIDDING OR PERMIT PURPOSES. PARKHILL, SMITH & COOPER, INC. F-560

ISSUED FOR INFORMATIONAL PURPOSES ONLY
Parkhill.com

Citizen Collection Stations
City Of Midland

MIDLAND Fuel the Energy!

CLIENT
City of Midland, Texas

300 N. Loraine
Midland, TX

PROJECT NO.
6119.21 - WEST
40015.22 - NORTH

#	DATE	DESCRIPTION
-	06/27/2023	City Council Review

West CCS Erosion Control Plan

C-002

FILE NAME: A:\2021\6119.21\03_DSGN\01_DWG\50_CIVIL\C-002-6119.21.dwg LAYOUT NAME: C-002 PRINTED: Monday, June 26, 2023 - 11:03am USER: SHarvey

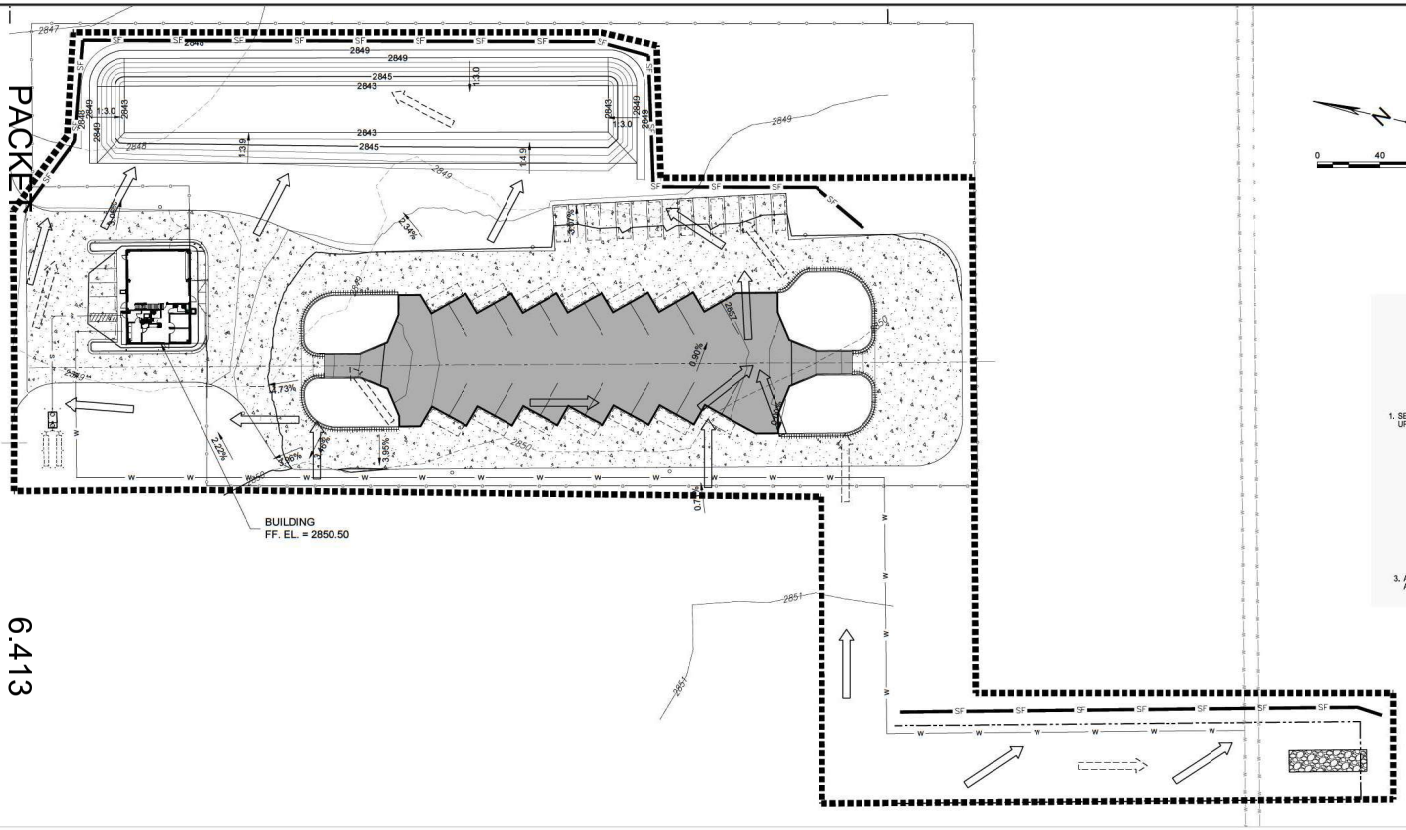

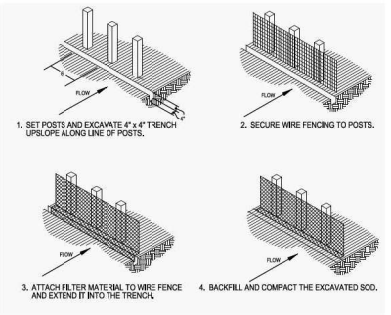

EROSION CONTROL NOTES

1. SILT FENCING OR TEMPORARY BERMS SHALL BE INSTALLED PRIOR TO START OF CONSTRUCTION.
2. TEMPORARY SWALES AND DESILTING BASINS WILL BE PLACED WHERE NECESSARY IN ORDER TO CONVEY STORMWATER RUN-OFF.
3. A STABILIZED CONSTRUCTION ENTRANCE WILL BE PROVIDED TO HELP REDUCE VEHICLE TRACKING OF SEDIMENTS. THE PAVED STREET ADJACENT TO THE SITE ENTRANCE WILL BE SWEPT DAILY TO REMOVE ANY EXCESS MUD. DIRT OR ROCK TRACKED FROM THE SITE.
4. THE CONTRACTOR SHALL BE RESPONSIBLE FOR INSURING THAT ALL EROSION CONTROL METHODS ARE INSPECTED ON A WEEKLY BASIS OR AFTER EVERY ERODIBLE RAINFALL (1/2"OR MORE). ANY NECESSARY REPAIRS OR CLEANUP TO MAINTAIN THE EFFECTIVENESS OF THE EROSION CONTROL SHALL BE MADE AT THAT TIME.
5. THIS DRAWING IS PART OF A TPDES CONSTRUCTION POLLUTION PREVENTION PLAN. PLEASE REFER TO TEXT PORTION OF THIS PLAN FOR ADDITIONAL AND REQUIREMENTS.

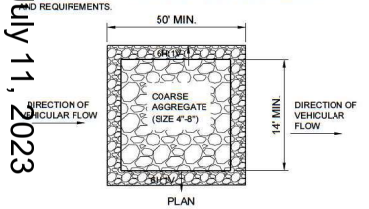

A1 STABILIZED CONSTRUCTION ENTRANCE (TxDOT TYPE 1)
NO SCALE

CWA MAINTENANCE NOTES

1. INSPECT BMPs EACH WORKDAY, AND MAINTAIN THEM IN EFFECTIVE OPERATING CONDITION. MAINTENANCE OF BMPs SHOULD BE PROACTIVE, NOT REACTIVE. INSPECT BMPs AS SOON AS POSSIBLE (AND ALWAYS WITHIN 24 HOURS) FOLLOWING A STORM THAT CAUSES SURFACE EROSION, AND PERFORM NECESSARY MAINTENANCE.
2. FREQUENT OBSERVATIONS AND MAINTENANCE ARE NECESSARY TO MAINTAIN BMPs IN EFFECTIVE OPERATING CONDITION. INSPECTIONS AND CORRECTIVE MEASURES SHOULD BE DOCUMENTED THOROUGHLY.
3. WHERE BMPs HAVE FAILED, REPAIR OR REPLACEMENT SHOULD BE INITIATED UPON DISCOVERY OF THE FAILURE.
4. THE CWA SHALL BE REPAIRED, CLEANED, OR ENLARGED AS NECESSARY TO MAINTAIN CAPACITY FOR CONCRETE WASTE. CONCRETE MATERIALS, ACCUMULATED IN PIT, SHALL BE REMOVED ONCE THE MATERIALS HAVE REACHED A DEPTH OF 2'.
5. CONCRETE WASHOUT WATER, WASTED PIECES OF CONCRETE AND ALL OTHER DEBRIS IN THE SUBSURFACE OF PIT SHALL BE TRANSPORTED FROM THE JOB SITE IN A WATER-TIGHT CONTAINER AND DISPOSED OF PROPERLY.
6. THE CWA SHALL REMAIN IN PLACE UNTIL ALL CONCRETE FOR THE PROJECT IS PLACED.
7. WHEN THE CWA IS REMOVED, COVER THE DISTURBED AREA WITH TOP SOIL, SEED AND MULCH OR OTHERWISE STABILIZED IN A MANNER APPROVED BY THE LOCAL JURISDICTION.

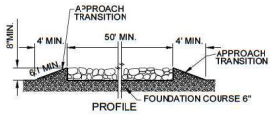

GENERAL NOTES

1. THE CONSTRUCTION ENTRANCE FOUNDATION COURSE SHALL BE FLEXIBLE BASE, BITUMINOUS CONCRETE, PORTLAND CEMENT CONCRETE OR OTHER MATERIAL AS APPROVED BY THE ENGINEER.
2. THE GUIDELINES SHOWN HEREON ARE SUGGESTIONS ONLY AND MAY BE MODIFIED BY THE ENGINEER.
3. CONTRACTOR TO COORDINATE WITH ENGINEER PRIOR TO CONSTRUCTION.
4. CONTRACTOR TO COORDINATE WITH OWNER THE LOCATION OF THE STAGING AREA AND CONCRETE WASHOUT AREA.

STABILIZED CONSTRUCTION NOTES

1. THE LENGTH OF THE TYPE 1 CONSTRUCTION EXIT SHALL BE AS INDICATED ON THE PLANS, BUT NOT LESS THAN 50'.
2. THE APPROACH SHOULD BE NO STEEPER THAN 6:1
3. THE CONSTRUCTION EXIT SHALL BE GRADED TO ALLOW DRAINAGE TO A SEDIMENT TRAPPING DEVICE.
4. USE 4"-8" STONE OR EQUIVALENT AT A MINIMUM DEPTH OF 12" FOR STABILIZED CONSTRUCTION ENTRANCE.
5. FILTER FABRIC SHOULD BE PLACED UNDERNEATH STONE OF CONSTRUCTION ENTRANCE TO REDUCE THE AMOUNT OF RUTTING AND TO PREVENT STONE FROM BEING EMBEDDED INTO THE SOIL.

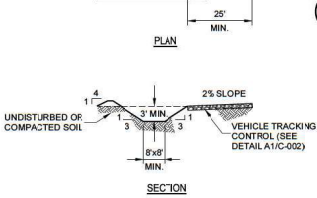

B3 CWA CONCRETE WASHOUT AREA
NO SCALE

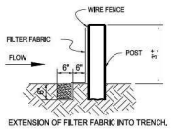

B4 FILTER FABRIC BARRIER (SILT FENCE)
NO SCALE

NOTES:

1. WOVEN WIRE FENCE TO BE FASTENED SECURELY TO FENCE POSTS WITH WIRE TIES OR STAPLES.
2. FILTER CLOTH TO BE FASTENED SECURELY TO WOVEN WIRE FENCE WITH TIES SPACED EVERY 24" AT THE TOP AND MIDSECTION.
3. WHEN TWO SECTIONS OF FILTER CLOTH ADJOIN EACH OTHER, THEY SHALL BE OVERLAPPED 6" AT THE POSTS AND FOLDED.
4. FENCE POSTS SHALL BE CAPABLE OF SUPPORTING FENCE AND MAY BE METAL OR WOOD.

ERCSION CONTROL LEGEND

1.60% 1:3.0	PROPOSED DRAINAGE, PATH SLOPE VALUE
	STABILIZED CONSTRUCTION ENTRANCE, SEE DETAIL THIS SHEET
	EXISTING CONTOURS (1' INTERVAL)
	PROPOSED CONTOURS (1' INTERVAL)
	LIMITS OF DISTURBANCE (AREA AFFECTED BY PROJECT APPROX. 4.23 ACRES)
	FLOW DIRECTION (PROPOSED)
	FLOW DIRECTION (EXISTING)
SF	SILT FENCE, SEE DETAIL THIS SHEET

Parkhill

THIS DOCUMENT IS RELEASED ON 06/27/2023 FOR THE PURPOSE OF INTERIM REVIEW UNDER THE AUTHORITY OF SPENSER J. HARVEY, P.E., TEXAS LICENSE #138737. IT IS NOT TO BE USED FOR REGULATORY APPROVAL, CONSTRUCTION, BIDDING OR PERMIT PURPOSES.
PARKHILL, SMITH & COOPER, INC. F-560

ISSUED FOR INFORMATIONAL PURPOSES ONLY
Parkhill.com

Citizen Collection Stations
City Of Midland

MIDLAND
Fuel the Energy!

CLIENT
City of Midland, Texas

300 N. Loraine
Midland, TX

PROJECT NO.
6119.21 - WEST
40015.22 - NORTH

#	DATE	DESCRIPTION
-	06/27/2023	City Council Review

North CCS Erosion Control Plan

C-003

FILE NAME: A:\2022\40015.2203_DSGN\01_DWG\50_CIVIL\C-003-40015-22.dwg LAYOUT NAME: C-003 PRINTED: Monday, June 26, 2023 - 11:08am USER: Stanley

PACKET 6.414

July 11, 2023

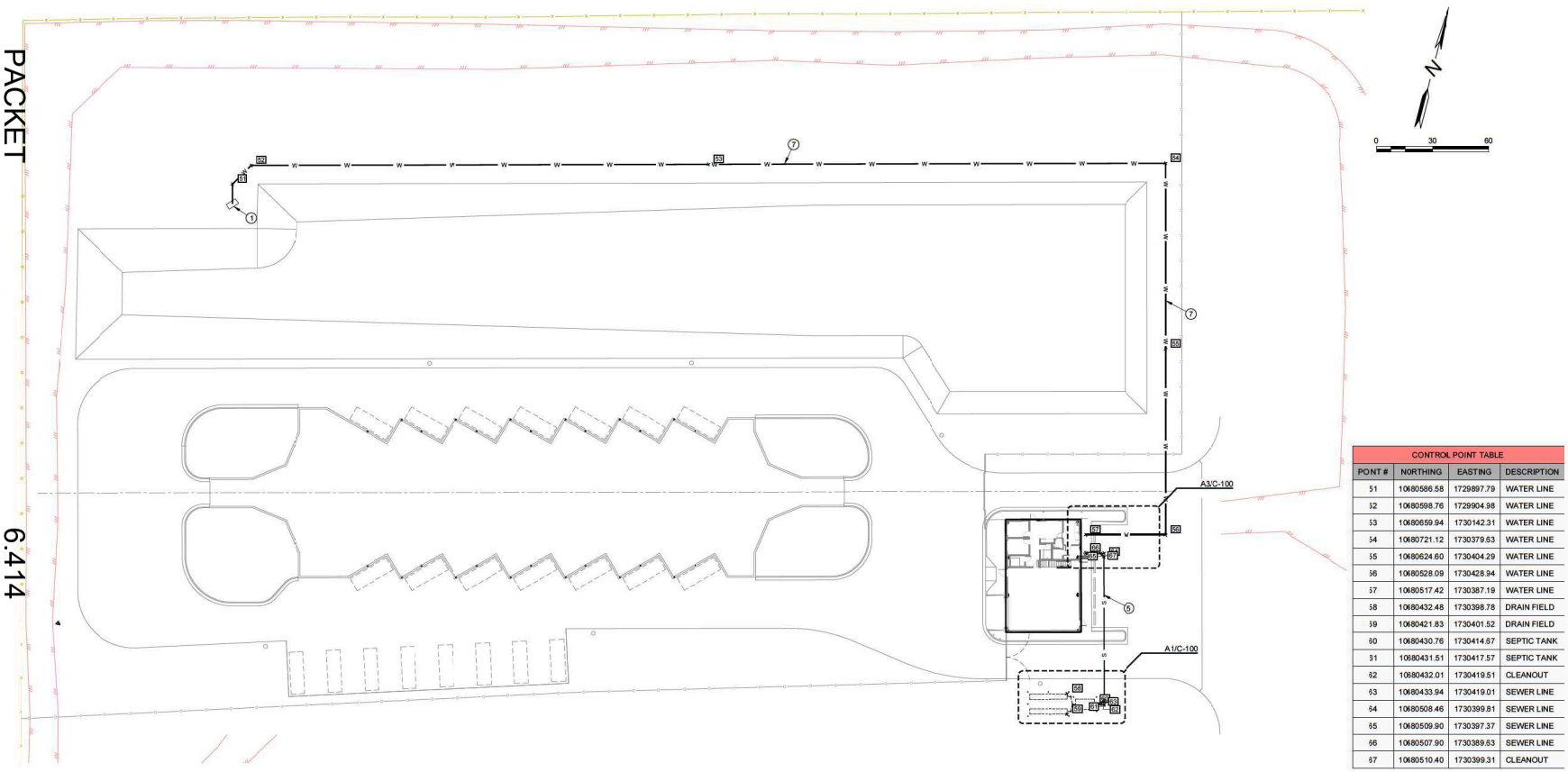

CONTROL POINT TABLE			
PONT #	NORTHING	EASTING	DESCRIPTION
51	10680586.58	1729897.79	WATER LINE
52	10680598.76	1729904.98	WATER LINE
53	10680659.94	1730142.31	WATER LINE
54	10680721.12	1730379.63	WATER LINE
55	10680624.60	1730404.29	WATER LINE
56	10680528.09	1730428.94	WATER LINE
57	10680517.42	1730387.19	WATER LINE
58	10680432.48	1730398.78	DRAIN FIELD
59	10680421.83	1730401.52	DRAIN FIELD
60	10680430.76	1730414.67	SEPTIC TANK
61	10680431.51	1730417.57	SEPTIC TANK
62	10680432.01	1730419.51	CLEANOUT
63	10680433.94	1730419.01	SEWER LINE
64	10680508.46	1730399.81	SEWER LINE
65	10680509.90	1730397.37	SEWER LINE
66	10680507.90	1730389.63	SEWER LINE
67	10680510.40	1730399.31	CLEANOUT

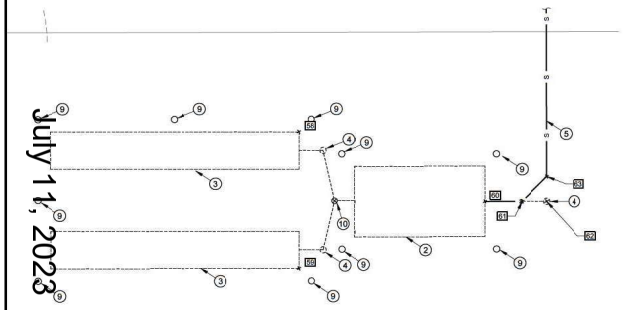

A1 PLAN DETAIL
NOT TO SCALE — ABSORPTIVE SYSTEM

KEY NOTES

AS INDICATED BY (XX)

1. EXISTING WATER WELL, 2" WATER LINE CONNECTION.
2. SEPTIC TANK. SEE DETAIL C3/C-503.
3. ABSORPTIVE DRAINFIELD. SEE DETAIL C1/C-503.
4. CLEANOUT. SEE DETAIL 31/C-503.
5. 4" SEWER LINE.
6. SEWER CONNECTION, SEE PLUMBING PLANS FOR CONTINUATION.
7. 2" WATER LINE.
8. WATER CONNECTION, SEE PLUMBING PLANS FOR CONTINUATION.
9. BOLLARD. SEE DETAIL C3/C-501.
10. DIVERTER VALVE.

GENERAL NOTES

1. CONTRACTOR SHALL OBTAIN A SOIL EVALUATION REPORT FOR SEPTIC SYSTEM SUITABILITY IN THE AREA PRIOR TO DESIGN AND CONSTRUCTION.
2. CONTRACTOR SHALL SIZE THE SEPTIC TANK FOR THIS FACILITY IN ACCORDANCE WITH ALL RELEVANT REGULATION AND ORDINANCES.
3. CONTRACTOR SHALL SIZE THE ABSORPTION FIELD IN ACCORDANCE WITH ALL RELEVANT REGULATION AND ORDINANCES.
4. FOR REDUNDANCY CONTRACTOR SHALL INSTALL TWO ADEQUATELY SIZED ABSORPTION FIELDS SEPARATED BY DIVERTER VALVE.
5. CONTRACTOR SHALL PROTECT SEPTIC TANK AND ABSORPTION FIELD WITH BOLLARDS. BOLLARDS SHALL BE OFFSET BY ONE FOOT FROM THE LIMITS OF THE INSTALLED SEPTIC TANK AND ABSORPTION FIELD.
6. CONTRACTOR SHALL COORDINATE WITH LOCAL OSSF PERMITTING AUTHORITY TO ACQUIRE ALL NECESSARY AUTHORIZATION OF OSSF SYSTEM.

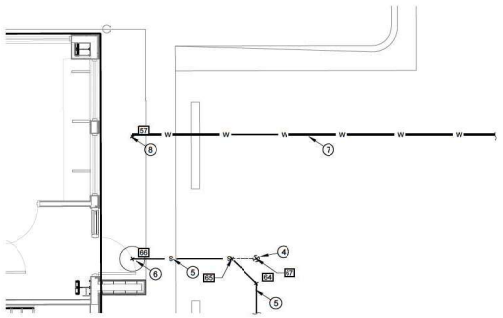

A3 PLAN DETAIL
NOT TO SCALE — BUILDING CONNECTION

Parkhill

THIS DOCUMENT IS RELEASED ON 06/27/2023 FOR THE PURPOSE OF INTERIM REVIEW UNDER THE AUTHORITY OF SPENSER J. HARVEY, P.E., TEXAS LICENSE #138737. IT IS NOT TO BE USED FOR REGULATORY APPROVAL, CONSTRUCTION, BIDDING OR PERMIT PURPOSES.
PARKHILL, SMITH & COOPER, INC. F-560

ISSUED FOR INFORMATIONAL PURPOSES ONLY

Parkhill.com

Citizen Collection Stations

City Of Midland

MIDLAND
Fuel the Energy!

CLIENT
City of Midland, Texas

300 N. Loraine
Midland, TX

PROJECT NO.
6119.21 - WEST
40015.22 - NORTH

#	DATE	DESCRIPTION
-	06/27/2023	City Council Review

West CCS Site Utility Plan

C-100

FILE NAME: A:\2021\6119.21\03_DSGN\01_DWG\050_CIVIL\C-100-6119.21.dwg LAYOUT NAME: C-100 PRINTED: Monday, June 26, 2023 - 11:04am USER: SHarvey

PACKET 6.415

July 11, 2023

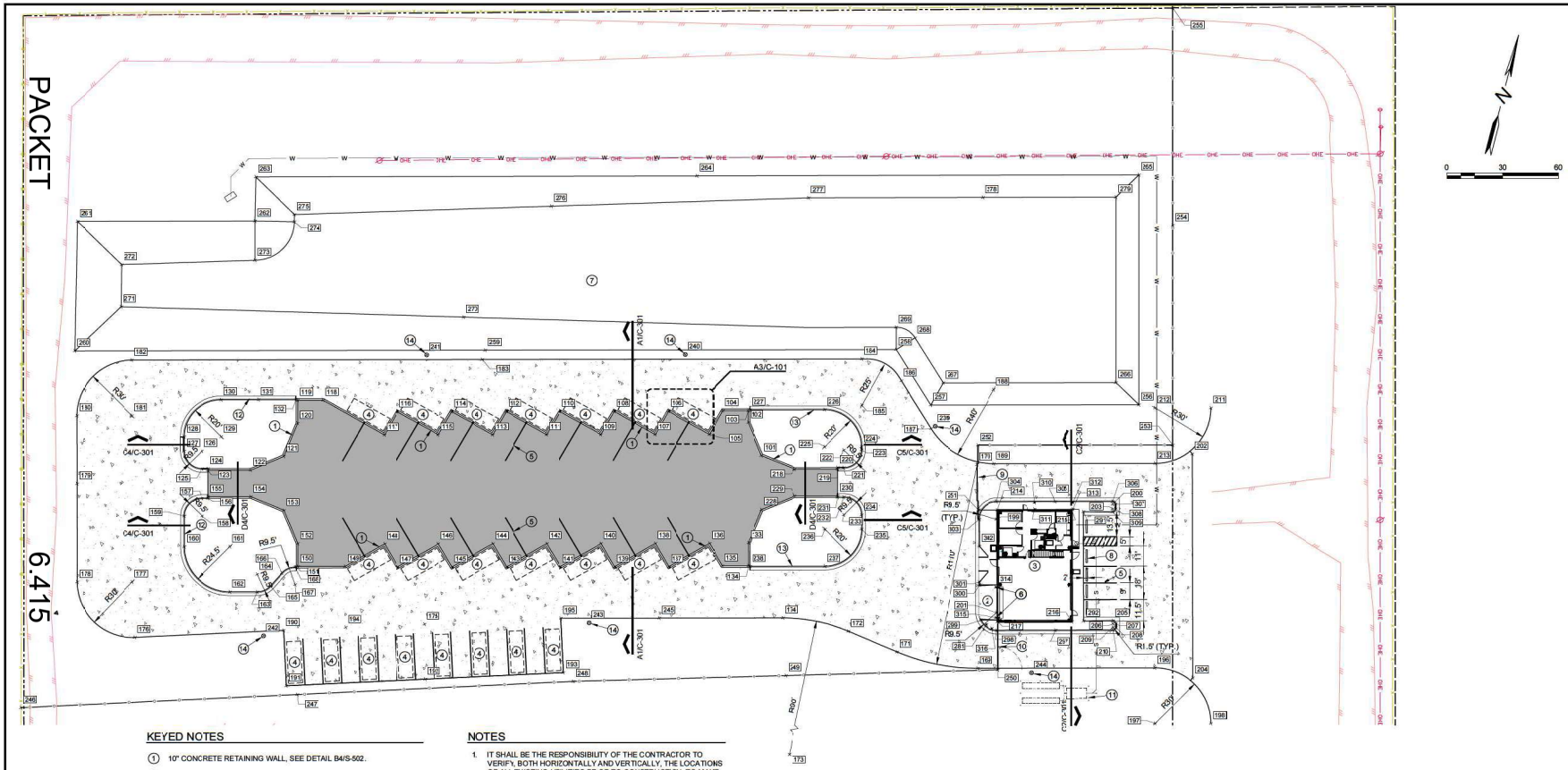

KEYED NOTES

1. 10" CONCRETE RETAINING WALL, SEE DETAIL B4/S-502.
2. CONCRETE DRIVEWAY FOR BUILDING ACCESS.
3. BUILDING REF. ARCH.
4. ROLL-OFF AREA.
5. 4" WIDE WHITE STRIPE.
6. BOLLARD, SEE DETAIL C3/C-501
7. PONDING AREA
8. CONCRETE WHEEL STOP, SEE DETAIL B3/C-501.
9. CANTILEVER GATE, SEE DETAIL A1/C-504.
10. SWING GATE, SEE DETAIL A1/C-502.
11. SEPTIC TANK AND ABSORPTIVE DRAINFIELD, SEE DETAIL C3/C-503.
12. 24" CURB & GUTTER, SEE DETAIL B1/C-501
13. 24" CURB & GUTTER, DROP LIP, SEE DETAIL B2/C-501
14. LIGHT POLE, REFER TO ELECTRICAL PLANS.
15. 6" WIDE x2" HIGH - RETAINING WALL CUT OUTS FOR DRAINAGE TYPICAL. SEE DETAIL B4/S-502.

NOTES

1. IT SHALL BE THE RESPONSIBILITY OF THE CONTRACTOR TO VERIFY, BOTH HORIZONTALLY AND VERTICALLY, THE LOCATIONS OF ALL EXISTING UTILITIES PRIOR TO CONSTRUCTION, TO MAKE ALL NECESSARY PRECAUTIONS IN ORDER TO PROTECT ALL FACILITIES ENCOUNTERED, AND TO NOTIFY THE ENGINEER PROMPTLY OF ALL CONFLICTS OF THE WORK WITH EXISTING FACILITIES.
2. ALL STRIPING DIMENSIONS ARE MEASURED FROM CENTER OF STRIPE OR TO BACK OF CURB UNLESS OTHERWISE NOTED
3. ALL STRIPING IS TO BE 4" WIDE WHITE STRIPE UNLESS OTHERWISE NOTED.
4. ALL DIMENSIONS ARE MEASURED TO BACK OF CURB UNLESS OTHERWISE NOTED.
5. SCORE CONCRETE SIDEWALK IN CONFORMANCE WITH SPECIFICATIONS AND DETAIL SHEET C-501.
6. MAINTAIN A MINIMUM 3 FOOT WIDTH ON ALL SIDEWALKS AND PATHS FOR HANDICAP ACCESSIBILITY.
7. METAL GUIDES TO BE INSTALLED IN ALL ROLL-OFF AREA BAYS, 12" GUIDES TO BE PLACED ALONG THE SHORT END OF THE ROLL-OFF BAY AND 8" GUIDES ALONG THE LONG END OF THE ROLL OFF BAY. SEE DETAILS C1.C3/S-502 AND A1/S-502. INSTALLATION TO BE COORDINATED WITH OWNER.
8. 6"x2" WALL CUT OUT ALONG THE RETAINING WALL. CUT OUTS TO BE AT THE DOWNSTREAM CORNER AND MIDDLE OF THE WALL. SEE DETAIL B4/S-502.
9. SEE SHEET C-301 FOR CROSS-SECTIONS.
10. COORDINATE ANY ADDITIONAL SIGNAGE WITH OWNER.
11. FOR SIGNAGE PLAN SEE SHEET C-104.
12. FOR JOINTING CONTROL PLAN SEE SHEET C-103.

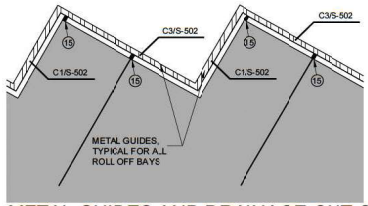

A3 METAL GUIDES AND DRAINAGE CUT OUTS
1" = 10'

LEGEND

- PROPERTY LINE
- CHAIN LINK FENCE, SEE DETAIL C1\C-505
- 24" CURB AND GUTTER, SEE DETAILS B1,B2\C-501
- SIGN, SEE SHEET C-203
- CONTROL POINT AND NUMBER, SEE SHEET C-601
- CONCRETE PAVING, SEE DETAIL D3\C-501
- LIGHT DUTY ASPHALT, SEE DETAIL D2\C-501

0 30 60

Parkhill

THIS DOCUMENT IS RELEASED ON 06/27/2023 FOR THE PURPOSE OF INTERIM REVIEW UNDER THE AUTHORITY OF SPENSER J. HARVEY, P.E., TEXAS LICENSE #138737. IT IS NOT TO BE USED FOR REGULATORY APPROVAL, CONSTRUCTION, BIDDING OR PERMIT PURPOSES.
PARKHILL, SMITH & COOPER, INC. F-560

ISSUED FOR INFORMATIONAL PURPOSES ONLY
Parkhill.com

Citizen Collection Stations
City Of Midland

MIDLAND Fuel the Energy!

CLIENT
City of Midland, Texas

300 N. Loraine
Midland, TX

PROJECT NO.
6119.21 - WEST
40015.22 - NORTH

#	DATE	DESCRIPTION
-	06/27/2023	City Council Review

West CCS Site Layout Plan

C-101

FILE NAME: A:\2021\6119.21\03_DSGN\01_DWG\050_CIVIL\C-101-6119.21.dwg LAYOUT NAME: C-101 PRINTED: Monday, June 26, 2023 - 11:07am USER: SHarvey

PACKET 6.416

July 11, 2023

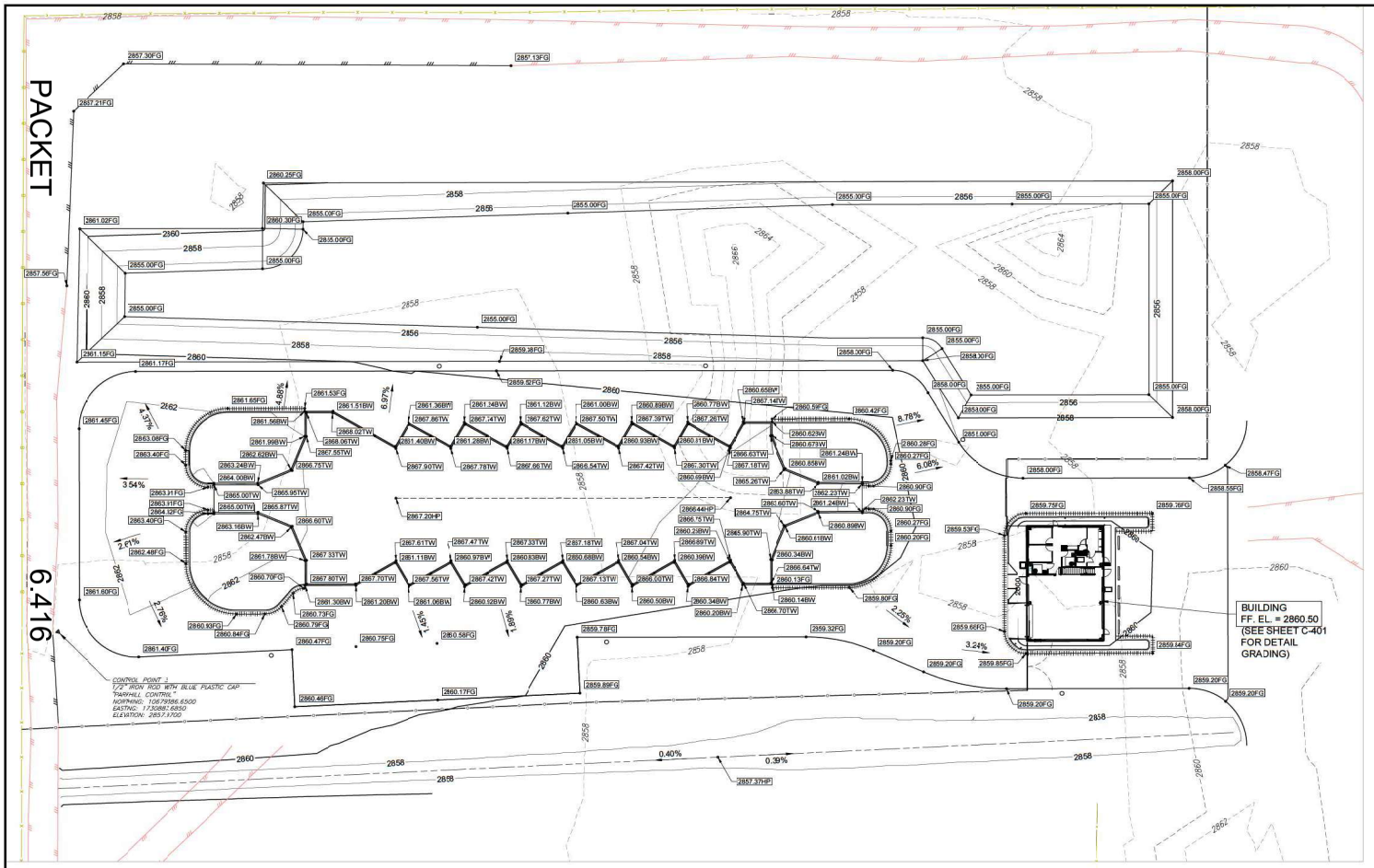

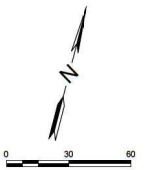

NOTES

1. MAXIMUM 2% SLOPE IN HANDICAP ACCESSIBLE AREAS IN ALL DIRECTIONS.
2. RAMPS ACCESSING THE ROLL-OFF DUMPSTERS NOT TO EXCEED 10% SLOPE.
3. MAXIMUM 2% CROSS SLOPE FOR HANDICAP ACCESSIBLE SIDEWALKS
4. A MINIMUM OF 0.25% SLOPE FOR CONCRETE SECTIONS AND 0.50% FOR ASPHALT SECTIONS UNLESS OTHERWISE SPECIFIED ON PLANS.
5. CONTRACTOR SHALL FIELD VERIFY ALL DIMENSIONS AND GRADES, NEW OR EXISTING PRIOR TO CONSTRUCTION. NOTIFY THE ENGINEER OF ANY DISCREPANCIES WITH EXISTING OR NEW CONDITIONS. THE CONTRACTOR SHALL EMPLOY A LICENSED PUBLIC SURVEYOR TO SET ALL GRADES, SPOT ELEVATIONS, FLOW LINES, ETC.
6. THE FLEXIBLE BASE COURSE SHALL MEET THE REQUIREMENTS AS SET FORTH WITHIN SECTION CRUSHED AGGREGATE BASE COURSE OF THE GEOTECHNICAL REPORT.
7. THE TOP SURFACE COURSE SHALL MEET THE REQUIREMENTS FOR GRADE "D" FOR THE TYPICAL SECTION AS SET FORTH WITHIN SECTION PLANT MIX BITUMINOUS PAVEMENTS OF THE TECHNICAL SPECIFICATIONS.
8. SUBGRADE TO BE COMPACTED TO 95% MAXIMUM DRY DENSITY AT ±3% OF OPTIMUM MOISTURE AS PER ASTM D-1557.

GRADING LEGEND

- 2860 — PROPOSED MAJOR CONTOUR ELEVATION
- 2858 — EXISTING CONTOUR
- GRADE BREAK
- SWALE
- 2859.20FG — NEW SPOT ELEVATION, TOP OF FINISHED GRADE
- 2857.37HP — NEW SPOT ELEVATION, HIGH POINT
- 2867.27TW — NEW SPOT ELEVATION, TOP OF WALL
- 2860.27BW — NEW SPOT ELEVATION, BOTTOM OF WALL
- 1.50% — DIRECTION OF FLOW AND VALUE

Parkhill

THIS DOCUMENT IS RELEASED ON 06/27/2023 FOR THE PURPOSE OF INTERIM REVIEW UNDER THE AUTHORITY OF SPENSER J. HARVEY, P.E., TEXAS LICENSE #138737. IT IS NOT TO BE USED FOR REGULATORY APPROVAL, CONSTRUCTION, BIDDING OR PERMIT PURPOSES. PARKHILL, SMITH & COOPER, INC. F-560

ISSUED FOR INFORMATIONAL PURPOSES ONLY

Parkhill.com

Citizen Collection Stations

City Of Midland

MIDLAND
Fuel the Energy!

CLIENT
City of Midland, Texas

300 N. Loraine
Midland, TX

PROJECT NO.
6119.21 - WEST
40015.22 - NORTH

#	DATE	DESCRIPTION
-	06/27/2023	City Council Review

West CCS Site Grading Plan

C-102

FILE NAME: A:\2021\6119-21\03_DSGN\01_DWG\050_CIVIL\C-102-6119-21.dwg LAYOUT NAME: C-102 PRINTED: Monday, June 26, 2023 - 11:08am USER: SHarvey

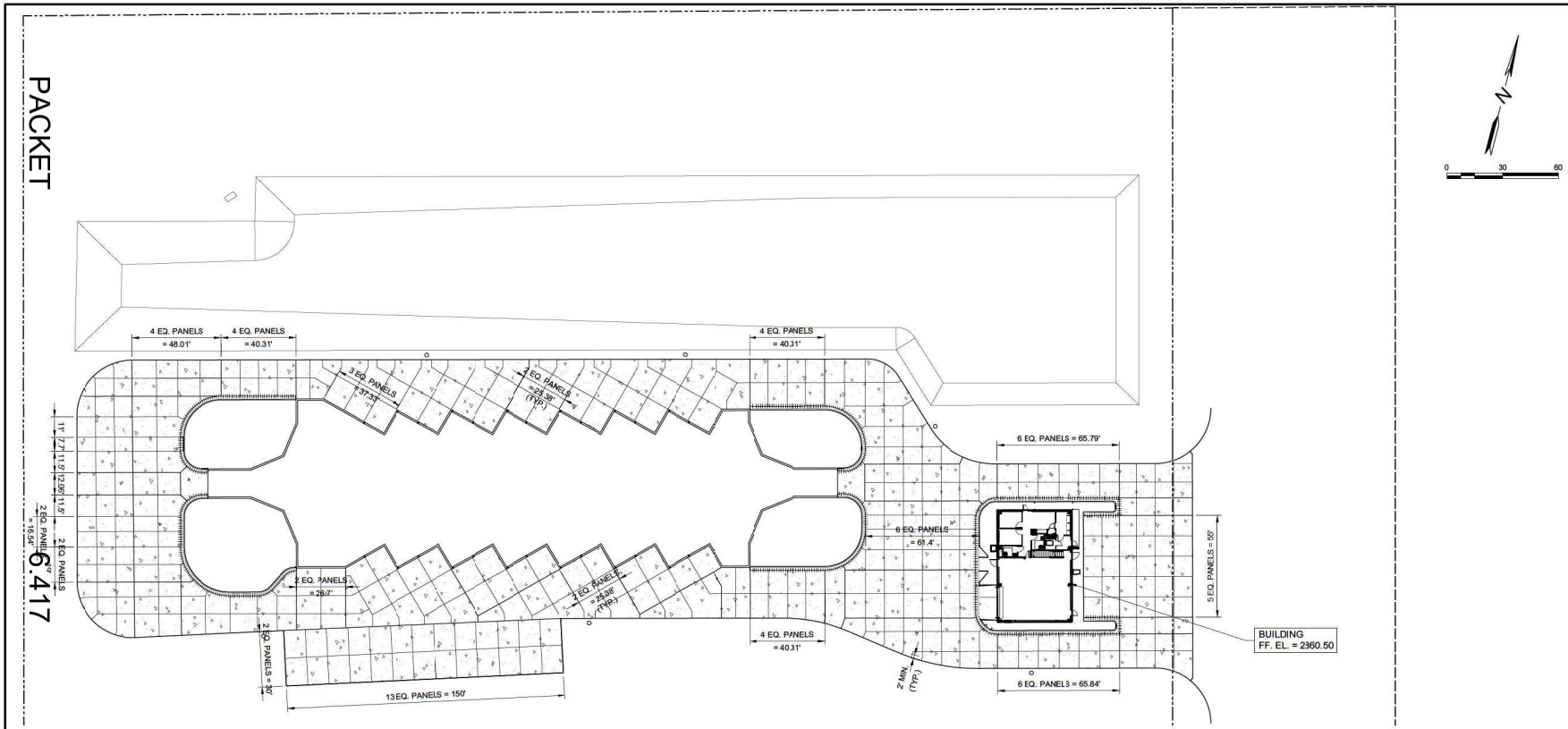

NOTES

1. IT SHALL BE THE RESPONSIBILITY OF THE CONTRACTOR TO VERFY, BOTH HORIZONTALLY AND VERTICALLY, THE LOCATIONS OF ALL EXISTING UTILITIES PRIOR TO CONSTRUCTION, TO MAKE ALL NECESSARY PRECAUTIONS IN ORDER TO PROTECT ALL FACILITIES ENCOUNTERED, AND TO NOTIFY THE ENGINEER PROMPTLY OF ALL CONFLICTS OF THE WORK WITH EXISTING FACILITIES.
2. SCORE CONCRETE SIDEWALK IN CONFORMANCE WITH SPECIFICATIONS AND DETAIL SHEET C-501
3. JOINT SPACING IS TO BE LESS THAN 30 TIMES THE CONCRETE SLAB THICKNESS IN FEET. E.G. 4"=0.32*30=10'
4. CONCRETE PANELS SHOULD BE SQUARE OR NEARLY SQUARE. THE LENGTH SHOULD NOT EXCEED 1.5 TIMES THE WIDTH. L-SHAPED PANELS SHOULD BE AVOIDED
5. THE JOINTING PLAN IS ONLY A RECOMMENDATION AND NOT A FINAL LAYOUT.
6. MAINTAIN A MINIMUM 3 FOOT WIDTH ON ALL SIDEWALKS AND PATHS FOR HANDICAP ACCESSIBILITY.
7. SEE SHEET C-301 FOR CROSS-SECTIONS

LEGEND

- 24" CURB AND GUTTER SEE, DETAIL B1,B2\C-501
- CONCRETE PAVING, SEE DETAIL D3\C-501
- EXPANSION JOINT, SEE DETAIL A1/C-501
- CONTRACTION JOINT, SEE DETAIL A2/C-501
- CONSTRUCTION JOINT, SEE DETAIL A4/C-501

July 11, 2023

FILE NAME: A:\2021\6119-21\03_DSGN\01_DWG\050_CIVIL\C-103-6119-21.dwg LAYOUT NAME: C-103 PRINTED: Monday, June 26, 2023 - 11:09am USER: SHarvey

Parkhill

THIS DOCUMENT IS RELEASED ON 06/27/2023 FOR THE PURPOSE OF INTERIM REVIEW UNDER THE AUTHORITY OF SPENSER J. HARVEY, P.E., TEXAS LICENSE #138737. IT IS NOT TO BE USED FOR REGULATORY APPROVAL, CONSTRUCTION, BIDDING OR PERMIT PURPOSES. PARKHILL, SMITH & COOPER, INC. F-560

ISSUED FOR INFORMATIONAL PURPOSES ONLY

Parkhill.com

Citizen Collection Stations

City Of Midland

MIDLAND Fuel the Energy!

CLIENT
City of Midland, Texas

300 N. Loraine
Midland, TX

PROJECT NO.
6119.21 - WEST
40015.22 - NORTH

#	DATE	DESCRIPTION
-	06/27/2023	City Council Review

West CCS Concrete Pavement Jointing Plan

C-103

PACKET 6.418

July 11, 2023

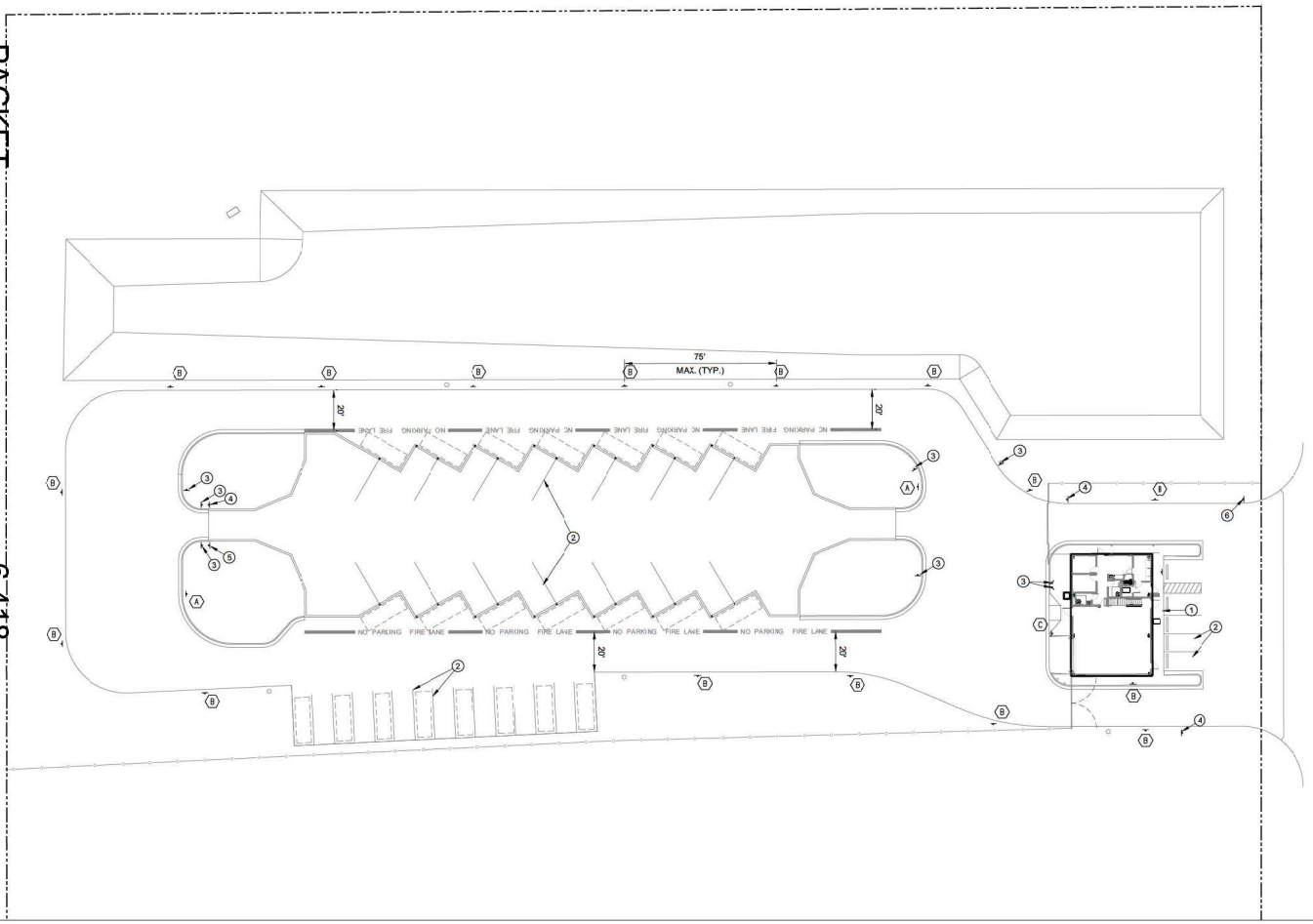

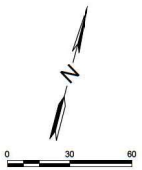



LETTERING - RED
BACKGROUND - WHITE
BORDER - BLACK

C5 FIRE LANE SIGNS
NOT TO SCALE

NOTES

1. ALL STRIPING DIMENSIONS ARE MEASURED FROM CENTER OF STRIPE OR TO BACK OF CURB UNLESS OTHERWISE NOTED
2. ALL STRIPING IS TO BE 4" WIDE WHITE STRIPE UNLESS OTHERWISE NOTED.
3. COORDINATE ANY ADDITIONAL SIGNAGE WITH OWNER.

KEYED NOTES

1. ACCESSIBLE SPACE SIGN, SEE DETAIL C5/C-501
2. 4" WIDE WHITE STRIPE
3. METAL SIGN "DO NOT ENTER", SEE DETAIL D2/C-502
4. METAL SIGN "STOP", SEE DETAIL D2/C-502
5. METAL SIGN "ONE-WAY", SEE DETAIL D2/C-502
6. ADDRESS SIGN, SEE DETAIL D1/C-502.

NEW FIRE LANE SIGN AND TYPE. SEE DETAIL C5/C-104.

LEGEND

SIGN

FIRE LANE - - -

NO PARKING FIRE LANE
6" WIDE RED BACKGROUND STRIPE WITH 3" HIGH WHITE LETTERS WITH A ONE-HALF INCH STROKE STATING "FIRE LANE - TOW AWAY ZONE" TO BE PAINTED UPON THE RED STRIPE EVERY 50' ALONG THE ENTIRE LENGTH OF THE FIRE LANE.

NEW FIRE LANE SIGN AND TYPE. SEE DETAIL C5/C-104.

SITE DATA - PARKING	MIN. REQUIRED	PROVIDED
STANDARD SPACES	2	3
ACCESSIBLE SPACES	1	2
TOTAL		5

NOTE:
PARKING SPACES ARE CALCULATED BASED ON CITY OF MIDLAND: ZONING ORDINANCE SECTION 6.02 FOR AN INDUSTRIAL USE THAT IS NOT SPECIFICALLY LISTED IN TABLE 6. THE FACILITY IS REQUIRED TO HAVE ONE SPACE FOR EACH TWO EMPLOYEES PER MAXIMUM SHIFT OR ONE SPACE PER EACH 1,000 SQUARE FEET OF FLOOR AREA, WHICH EVER IS GREATER. THE BUILDING IS ~2,445 SQUARE FEET. THE MAXIMUM OCCUPANCY PER SHIFT IS EXPECTED TO BE 4.

Parkhill

THIS DOCUMENT IS RELEASED ON 06/27/2023 FOR THE PURPOSE OF INTERIM REVIEW UNDER THE AUTHORITY OF SPENSER J. HARVEY, P.E., TEXAS LICENSE #138737. IT IS NOT TO BE USED FOR REGULATORY APPROVAL, CONSTRUCTION, BIDDING OR PERMIT PURPOSES.
PARKHILL, SMITH & COOPER, INC. F-560

ISSUED FOR INFORMATIONAL PURPOSES ONLY

Parkhill.com

Citizen Collection Stations

City Of Midland

MIDLAND
Fuel the Energy!

CLIENT
City of Midland, Texas

300 N. Loraine
Midland, TX

PROJECT NO.
6119.21 - WEST
40015.22 - NORTH

#	DATE	DESCRIPTION
-	06/27/2023	City Council Review

West CCS Signage Control Plan

C-104

FILE NAME: A:\2021\6119-21\03_DSGN\01_DWG\050_CIVIL\C-104-6119-21.dwg LAYOUT NAME: C-104 PRINTED: Monday, June 26, 2023 - 11:10am USER: SHarvey

PACKET

6.419

July 11, 2023

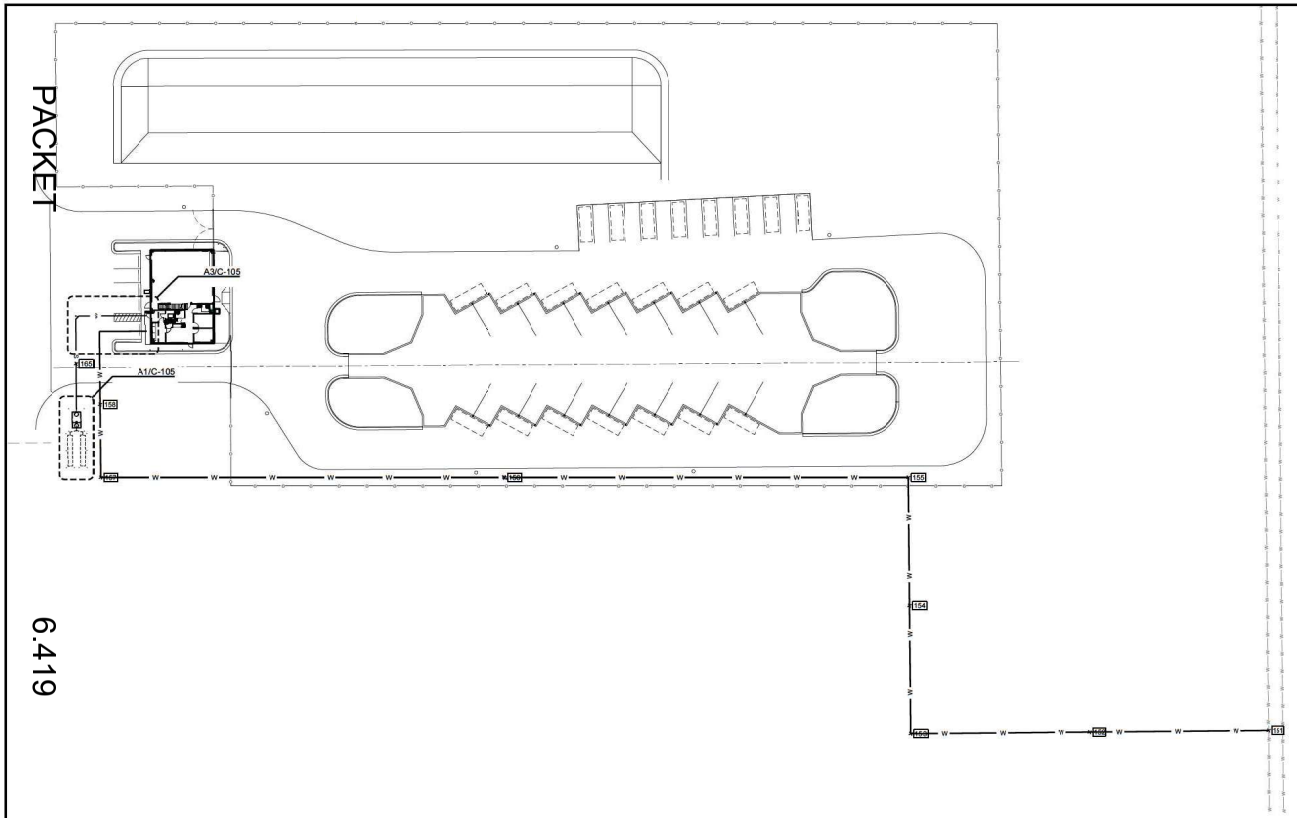

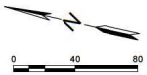

CONTROL POINTS			
POINT NAME	NORTHING	EASTING	DESCRIPTION
151	6739154.55	855135.07	TAP SADDLE
152	6739266.54	855108.53	WATER LINE
153	6739378.53	855081.98	WATER LINE
154	6739391.59	855162.25	WATER LINE
155	6739416.65	855242.51	WATER LINE
156	6739670.17	855184.85	WATER LINE
157	6739923.69	855127.18	WATER LINE
158	6739934.56	855172.93	WATER LINE
159	6739945.42	855218.67	WATER LINE
160	6739930.38	855222.17	SEWER LINE
161	6739939.02	855230.43	SEWER LINE
162	6739960.43	855225.46	SEWER LINE
163	6739962.38	855225.00	CLEANOUT
164	6739961.92	855223.06	SEWER LINE
165	6739955.36	855195.08	SEWER LINE
166	6739948.74	855166.87	CLEANOUT
167	6739948.28	855164.92	SEPTIC TANK
168	6739950.30	855149.07	DRAIN FIELD
169	6739939.60	855151.61	DRAIN FIELD

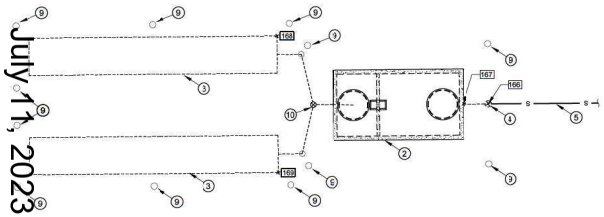

A1 PLAN DETAIL
NOT TO SCALE — ABSORPTIVE SYSTEM

KEY NOTES

AS INDICATED BY (XX)

1. EXISTING WATER WELL, 2" WATER LINE CONNECTION.
2. SEPTIC TANK. SEE DETAIL C3/C-504.
3. ABSORPTIVE DRAINFIELD. SEE DETAIL C1/C-504.
4. CLEANOUT. SEE DETAIL 3/C-504.
5. 4" SEWER LINE.
6. SEWER CONNECTION, SEE PLUMBING PLANS FOR CONTINUATION.
7. 2" WATER LINE.
8. WATER CONNECTION, SEE PLUMBING PLANS FOR CONTINUATION.
9. BOLLARD, SEE DETAIL C3/C-501.
10. DIVERTER VALVE.

GENERAL NOTES

1. CONTRACTOR SHALL OBTAIN A SOIL EVALUATION REPORT FOR SEPTIC SYSTEM SUITABILITY IN THE AREA PRIOR TO DESIGN AND CONSTRUCTION.
2. CONTRACTOR SHALL SIZE THE SEPTIC TANK FOR THIS FACILITY IN ACCORDANCE WITH ALL RELEVANT REGULATION AND ORDINANCES.
3. CONTRACTOR SHALL SIZE THE ABSORPTION FIELD IN ACCORDANCE WITH ALL RELEVANT REGULATION AND ORDINANCES.
4. FOR REDUNDANCY CONTRACTOR SHALL INSTALL TWO ADEQUATELY SIZED ABSORPTION FIELDS SEPARATED BY DIVERTER VALVE.
5. CONTRACTOR SHALL PROTECT SEPTIC TANK AND ABSORPTION FIELD WITH BOLLARDS. BOLLARDS SHALL BE OFFSET BY ONE FOOT FROM THE LIMITS OF THE INSTALLED SEPTIC TANK AND ABSORPTION FIELD.
6. CONTRACTOR SHALL COORDINATE WITH LOCAL OSSF PERMITTING AUTHORITY TO ACQUIRE ALL NECESSARY AUTHORIZATION OF OSSF SYSTEM.

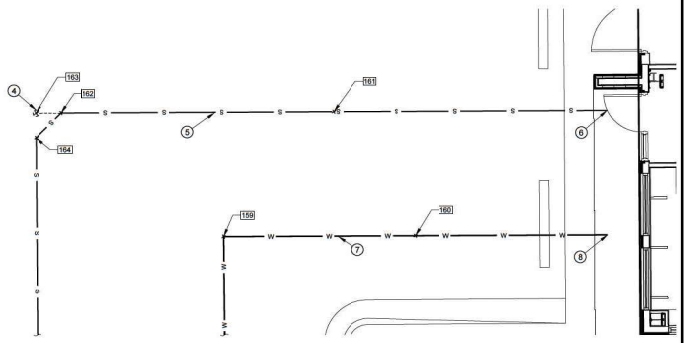

A3 PLAN DETAIL
NOT TO SCALE — BUILDING CONNECTION

Parkhill

THIS DOCUMENT IS RELEASED ON 06/27/2023 FOR THE PURPOSE OF INTERIM REVIEW UNDER THE AUTHORITY OF SPENSER J. HARVEY, P.E., TEXAS LICENSE #138737. IT IS NOT TO BE USED FOR REGULATORY APPROVAL, CONSTRUCTION, BIDDING OR PERMIT PURPOSES.
PARKHILL, SMITH & COOPER, INC. F-560

ISSUED FOR INFORMATIONAL PURPOSES ONLY

Parkhill.com

Citizen Collection Stations

City Of Midland

MIDLAND
Fuel the Energy!

CLIENT
City of Midland, Texas

300 N. Loraine
Midland, TX

PROJECT NO.
6119.21 - WEST
40015.22 - NORTH

#	DATE	DESCRIPTION
-	06/27/2023	City Council Review

North CCS Site Utility Plan

C-105

FILE NAME: A:\2022\40015.2203_DSGN\01_DWG\50_CIVIL\C-105-40015-22.dwg LAYOUT NAME: C-105 PRINTED: Monday, June 26, 2023 - 11:11am USER: Stanvey

PACKET 6.420 July 11, 2023

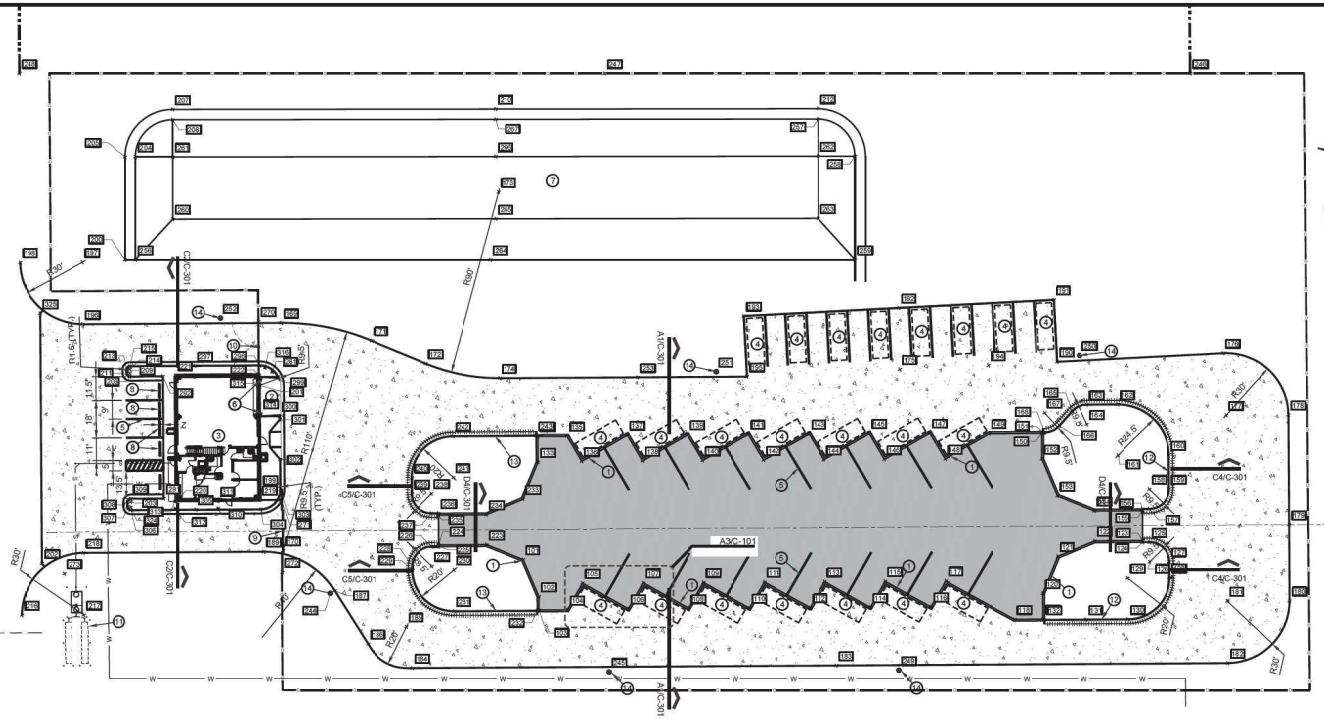

KEYED NOTES

1. 10" CONCRETE RETAINING WALL, SEE DETAIL B4/S-502.
2. CONCRETE DRIVEWAY FOR BUILDING ACCESS.
3. BUILDING REF. ARCH-.
4. ROLL-OFF AREA.
5. 4" WIDE WHITE STRIPE.
6. BOLLARD, SEE DETAIL C3/C-501
7. PONDING AREA
8. CONCRETE WHEEL STOP, SEE DETAIL B3/C-501.
9. CANTILEVER GATE, SEE DETAIL A1/C-504.
10. SAWTOOTH CURB & GUTTER, SEE DETAIL C1/C-501.
11. SEPTIC TANK AND ABSORPTIVE DRAINFIELD, SEE DETAIL C3/C-103.
12. 24" CURB & GUTTER, SEE DETAIL B1/C-501
13. 24" CURB & GUTTER, DROP LIP, SEE DETAIL B2/C-501
14. LIGHT POLE, REFER TO ELECTRICAL PLANS.
15. 6" WIDE x2" HIGH - RETAINING WALL CUT OUTS FOR DRAINAGE, TYPICAL. SEE DETAIL B4/S-502.

NOTES

1. IT SHALL BE THE RESPONSIBILITY OF THE CONTRACTOR TO VERIFY, BOTH HORIZONTALLY AND VERTICALLY, THE LOCATIONS OF ALL EXISTING UTILITIES PRIOR TO CONSTRUCTION, TO MAKE ALL NECESSARY PRECAUTIONS IN ORDER TO PROTECT ALL FACILITIES ENCOUNTERED, AND TO NOTIFY THE ENGINEER PROMPTLY OF ALL CONFLICTS OF THE WORK WITH EXISTING FACILITIES.
2. ALL STRIPING DIMENSIONS ARE MEASURED FROM CENTER OF STRIPE OR TO BACK OF CURB UNLESS OTHERWISE NOTED
3. ALL STRIPING IS TO BE 4" WIDE WHITE STRIPE UNLESS OTHERWISE NOTED.
4. ALL DIMENSIONS ARE MEASURED TO BACK OF CURB UNLESS OTHERWISE NOTED.
5. SCORE CONCRETE SIDEWALK IN CONFORMANCE WITH SPECIFICATIONS AND DETAIL SHEET C-501.
6. MAINTAIN A MINIMUM 3 FOOT WIDTH ON ALL SIDEWALKS AND PATHS FOR HANDICAP ACCESSIBILITY.
7. METAL GUIDES TO BE INSTALLED IN ALL ROLL-OFF AREA BAYS. 12" GUIDES TO BE PLACED ALONG THE SHORT END OF THE ROLL-OFF BAY AND 8" GUIDES ALONG THE LONG END OF THE ROLL OFF BAY. SEE DETAILS C1.C3/S-502 AND A1/S-502. INSTALLATION TO BE COORDINATED WITH OWNER.
8. 6"x2" WALL CUT OUT ALONG THE RETAINING WALL. CUT OUTS TO BE AT THE DOWNSTREAM CORNER AND MIDDLE OF THE WALL. SEE DETAIL B4/S-502.
9. SEE SHEET C-301 FOR CROSS-SECTIONS.
10. COORDINATE ANY ADDITIONAL SIGNAGE WITH OWNER.
11. FOR SIGNAGE PLAN SEE SHEET C-104.
12. FOR JOINTING CONTROL PLAN SEE SHEET C-103.

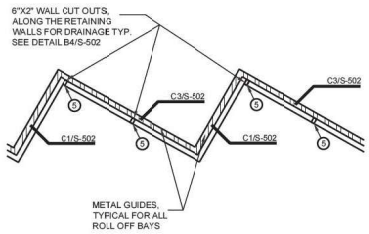

C4 METAL GUIDES AND DRAINAGE CUT OUTS
1" = 10'

LEGEND

- PROPERTY LINE
- CHAIN LINK FENCE, SEE DETAIL C1\C-505
- 24" CURB AND GUTTER, SEE DETAILS B1,B2\C-501
- SIGN, SEE SHEET C-203
- CONTROL POINT AND NUMBER, SEE SHEET C-601
- CONCRETE PAVING, SEE DETAIL D3\C-501
- CONCRETE SIDEWALK, SEE DETAIL B4\C-501
- LIGHT DUTY ASPHALT, SEE DETAIL D2\C-501

Parkhill

THIS DOCUMENT IS RELEASED ON 06/27/2023 FOR THE PURPOSE OF INTERIM REVIEW UNDER THE AUTHORITY OF SPENSER J. HARVEY, P.E., TEXAS LICENSE #138737. IT IS NOT TO BE USED FOR REGULATORY APPROVAL, CONSTRUCTION, BIDDING OR PERMIT PURPOSES.
PARKHILL, SMITH & COOPER, INC. F-560

ISSUED FOR INFORMATIONAL PURPOSES ONLY
Parkhill.com

Citizen Collection Stations
City Of Midland

MIDLAND Feel the Energy!

CLIENT
City of Midland, Texas

300 N. Loraine
Midland, TX

PROJECT NO.
6119.21 - WEST
40015.22 - NORTH

#	DATE	DESCRIPTION
-	06/27/2023	City Council Review

North CCS Site Layout Plan

C-106

FILE NAME: A:\2022\40015.22\03_DSGN\01_DWG\05D_CIVIL\C-105-40015-22.dwg LAYOUT NAME: C-106 PRINTED: Monday, June 26, 2023 - 11:12am USER: SHarvey

PACKET

6.421

July 11, 2023

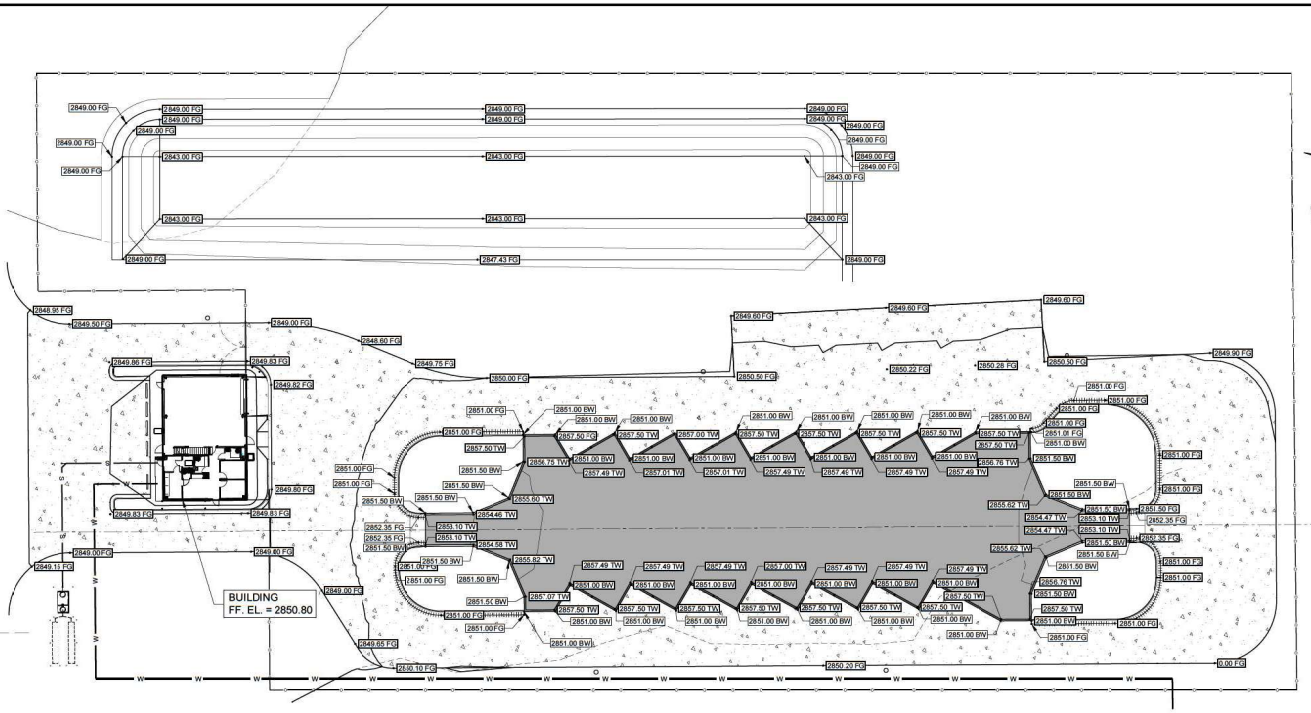

NOTES

1. MAXIMUM 2% SLOPE IN HANDICAP ACCESSIBLE AREAS IN ALL DIRECTIONS.
2. RAMPS ACCESSING THE ROLL-OFF DUMPSTERS NOT TO EXCEED 10% SLOPE
3. MAXIMUM 2% CROSS SLOPE FOR HANDICAP ACCESSIBLE SIDEWALKS
4. A MINIMUM OF 0.25% SLOPE FOR CONCRETE SECTIONS AND 0.50% FOR ASPHALT SECTIONS UNLESS OTHERWISE SPECIFIED ON PLANS.
5. CONTRACTOR SHALL FIELD VERIFY ALL DIMENSIONS AND GRADES, NEW OR EXISTING PRIOR TO CONSTRUCTION. NOTIFY THE ENGINEER OF ANY DISCREPANCIES WITH EXISTING OR NEW CONDITIONS. THE CONTRACTOR SHALL EMPLOY A LICENSED PUBLIC SURVEYOR TO SET ALL GRADES, SPOT ELEVATIONS, FLOW LINES, ETC.
6. THE FLEXIBLE BASE COURSE SHALL MEET THE REQUIREMENTS AS SET FORTH WITHIN SECTION CRUSHED AGGREGATE BASE COURSE OF THE GEOTECHNICAL REPORT.
7. THE TOP SURFACE COURSE SHALL MEET THE REQUIREMENTS FOR GRADE "D" FOR THE TYPICAL SECTION AS SET FORTH WITHIN SECTION PLANT MIX BITUMINOUS PAVEMENTS OF THE TECHNICAL SPECIFICATIONS.
8. SUBGRADE TO BE COMPACTED TO 95% MAXIMUM DRY DENSITY AT ±3% OF OPTIMUM MOISTURE AS PER ASTM D-1557.

GRADING LEGEND

- 2860 — PROPOSED MAJOR CONTOUR ELEVATION
- 2858 — EXISTING CONTOUR
- GRADE BREAK
- SWALE
- 2859.20FG — NEW SPOT ELEVATION, TOP OF FINISHED GRADE
- 2857.37HP — NEW SPOT ELEVATION, HIGH POINT
- 2867.27TW — NEW SPOT ELEVATION, TOP OF WALL
- 2860.27BW — NEW SPOT ELEVATION, BOTTOM OF WALL
- 1.50% — DIRECTION OF FLOW AND VALUE

Parkhill

THIS DOCUMENT IS RELEASED ON 06/27/2023 FOR THE PURPOSE OF INTERIM REVIEW UNDER THE AUTHORITY OF SPENSER J. HARVEY, P.E., TEXAS LICENSE #138737. IT IS NOT TO BE USED FOR REGULATORY APPROVAL, CONSTRUCTION, BIDDING OR PERMIT PURPOSES.
PARKHILL, SMITH & COOPER, INC. F-560

ISSUED FOR INFORMATIONAL PURPOSES ONLY
Parkhill.com

Citizen Collection Stations

City Of Midland

MIDLAND
Fuel the Energy!

CLIENT
City of Midland, Texas

300 N. Loraine
Midland, TX

PROJECT NO.
6119.21 - WEST
40015.22 - NORTH

#	DATE	DESCRIPTION
-	06/27/2023	City Council Review

North CCS Site Grading Plan

C-107

FILE NAME: A:\2022\40015.2203_DSGN\01_DWG\650_CIVIL\C-107-40015-22.dwg LAYOUT NAME: C-107 PRINTED: Monday, June 26, 2023 - 11:13am USER: Stlarvey

PACKET 6.422 July 11, 2023

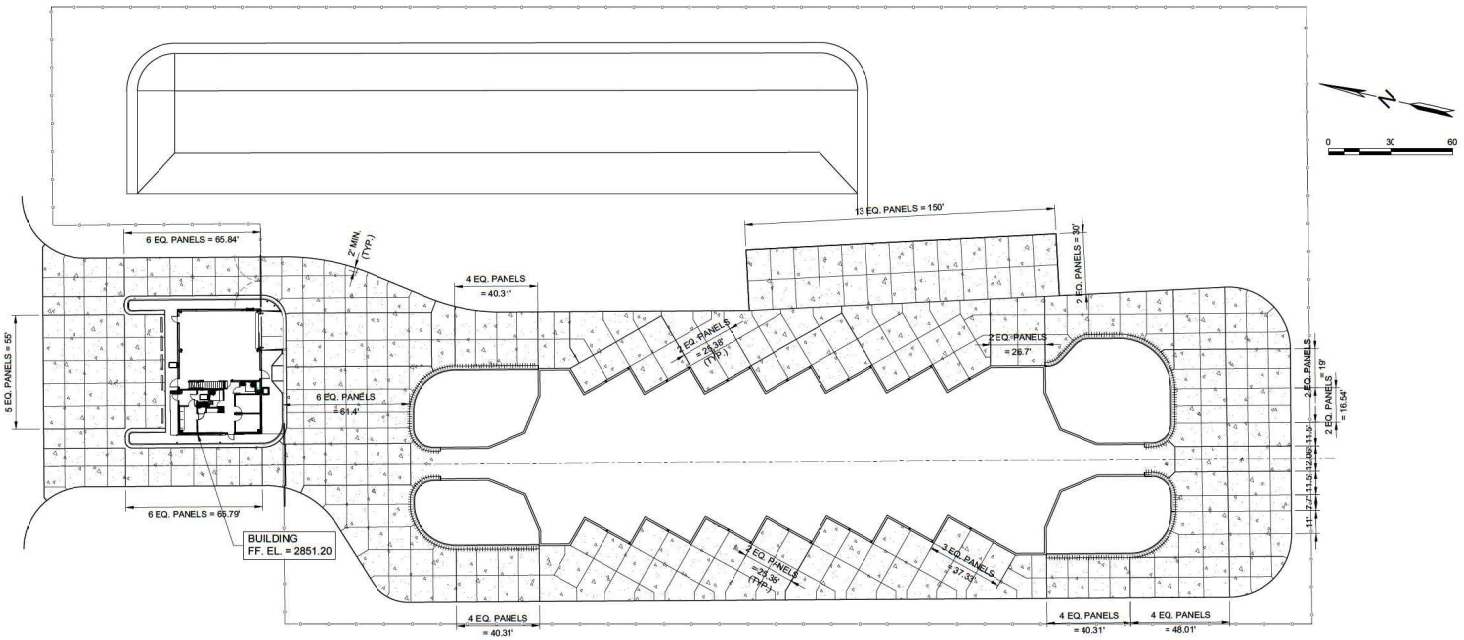

NOTES

1. IT SHALL BE THE RESPONSIBILITY OF THE CONTRACTOR TO VERIFY, BOTH HORIZONTALLY AND VERTICALLY, THE LOCATIONS OF ALL EXISTING UTILITIES PRIOR TO CONSTRUCTION, TO MAKE ALL NECESSARY PRECAUTIONS IN ORDER TO PROTECT ALL FACILITIES ENCOUNTERED, AND TO NOTIFY THE ENGINEER PROMPTLY OF ALL CONFLICTS OF THE WORK WITH EXISTING FACILITIES.
2. SCORE CONCRETE SIDEWALK IN CONFORMANCE WITH SPECIFICATIONS AND DETAIL SHEET C-501
3. JOINT SPACING IS TO BE LESS THAN 30 TIMES THE CONCRETE SLAB THICKNESS IN FEET. E.G. 4"=0.33*30=10'
4. CONCRETE PANELS SHOULD BE SQUARE OR NEARLY SQUARE. THE LENGTH SHOULD NOT EXCEED 1.5 TIMES THE WIDTH. L-SHAPED PANELS SHOULD BE AVOIDED
5. THE JOINTING PLAN IS ONLY A RECOMMENDATION AND NOT A FINAL LAYOUT.
6. MAINTAIN A MINIMUM 3 FOOT WIDTH ON ALL SIDEWALKS AND PATHS FOR HANDICAP ACCESSIBILITY.
7. SEE SHEET C-301 FOR CROSS-SECTIONS

LEGEND

- 24" CURB AND GUTTER SEE, DETAIL B1,B2/C-501
- CONCRETE PAVING, SEE DETAIL D3/C-501
- EXPANSION JOINT, SEE DETAIL A1/C-501
- CONTRACTION JOINT, SEE DETAIL A2/C-501
- CONSTRUCTION JOINT, SEE DETAIL A4/C-501

Parkhill

THIS DOCUMENT IS RELEASED ON 06/27/2023 FOR THE PURPOSE OF INTERIM REVIEW UNDER THE AUTHORITY OF SPENSER J. HARVEY, P.E., TEXAS LICENSE #138737. IT IS NOT TO BE USED FOR REGULATORY APPROVAL, CONSTRUCTION, BIDDING OR PERMIT PURPOSES.
PARKHILL, SMITH & COOPER, INC. F-560

ISSUED FOR INFORMATIONAL PURPOSES ONLY

Parkhill.com

Citizen Collection Stations

City Of Midland

MIDLAND
Fuel the Energy!

CLIENT
City of Midland, Texas

300 N. Loraine
Midland, TX

PROJECT NO.
6119.21 - WEST
40015.22 - NORTH

#	DATE	DESCRIPTION
-	06/27/2023	City Council Review

North CCS Pavement Jointing Plan

C-108

FILE NAME: A:\2022\40015.2203_DSGN\01_DWG\05D_CIVIL\C-108-40015-22.dwg LAYOUT NAME: C-108 PRINTED: Monday, June 26, 2023 - 11:14am USER: Stlarvey

PACKET 6.423 July 11, 2023

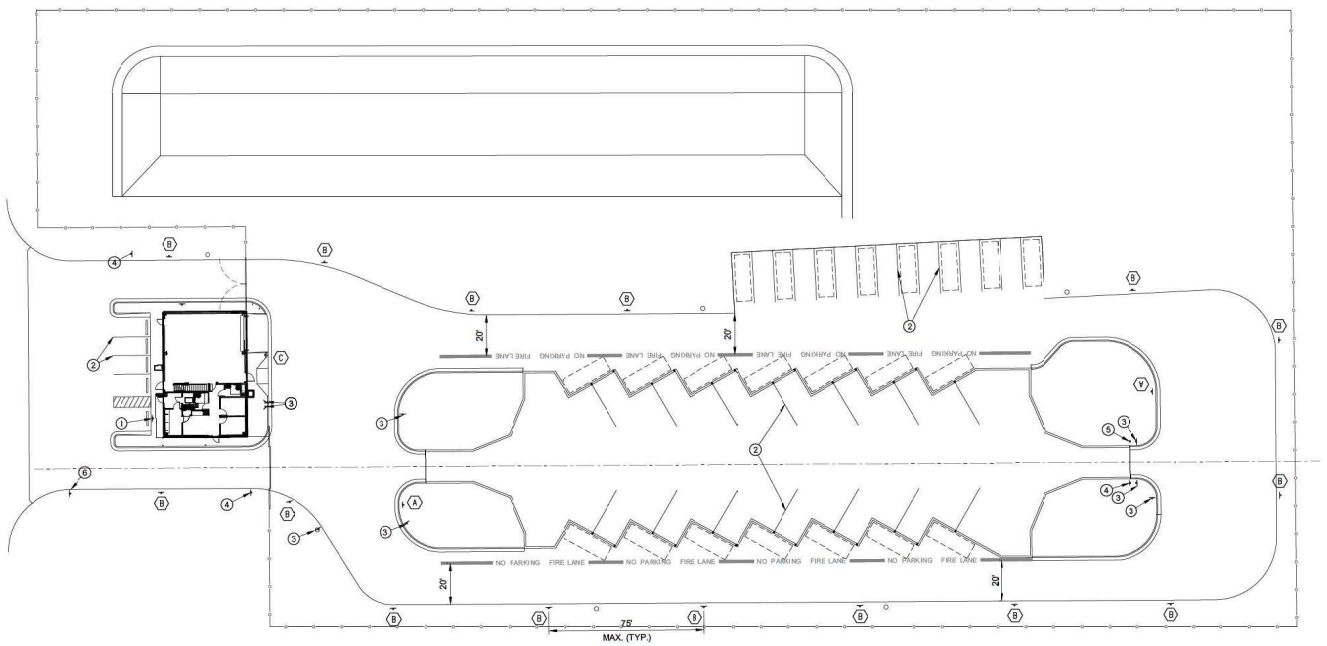

0 40 80



LETTERING - RED
BACKGROUND - WHITE
BORDER - BLACK

C5 FIRE LANE SIGNS
NOT TO SCALE

NOTES

1. ALL STRIPING DIMENSIONS ARE MEASURED FROM CENTER OF STRIPE OR TO BACK OF CURB, MARKED WITH (F) DENOTES DIMENSIONED TO FACE OF CURB.
2. ALL STRIPING IS TO BE 4" WIDE WHITE STRIPE UNLESS OTHERWISE NOTED.
3. COORDINATE ANY ADDITIONAL SIGNAGE WITH OWNER.

KEYED NOTES

1. ACCESSIBLE SPACE SIGN, SEE DETAIL C5/C-501
2. 4" WIDE WHITE STRIPE
3. METAL SIGN "DO NOT ENTER", SEE DETAIL D2/C-502
4. METAL SIGN "STOP", SEE DETAIL D2/C-502
5. METAL SIGN "ONE-WAY", SEE DETAIL D2/C-502
6. ADDRESS SIGN, SEE DETAIL D1/C-502.

NEW FIRE LANE SIGN AND TYPE. SEE DETAIL C5/C-104.

LEGEND

SIGN

FIRE LANE - ...

NO PARKING FIRE LANE
6" WIDE RED BACKGROUND STRIPE WITH 3" HIGH WHITE LETTERS WITH A ONE-HALF INCH STROKE STATING "FIRE LANE - TOW AWAY ZONE" TO BE PAINTED UPON THE RED STRIPE EVERY 50' ALONG THE ENTIRE LENGTH OF THE FIRE LANE.

NEW FIRE LANE SIGN AND TYPE. SEE DETAIL C5/C-104.

SITE DATA - PARKING	MIN. REQUIRED	PROVIDED
STANDARD SPACES	2	3
ACCESSIBLE SPACES	1	2
TOTAL		5

NOTE:
PARKING SPACES ARE CALCULATED BASED ON CITY OF MIDLAND: ZONING ORDINANCE SECTION 6.02 FOR AN INDUSTRIAL USE THAT IS NOT SPECIFICALLY LISTED IN TABLE 6. THE FACILITY IS REQUIRED TO HAVE ONE SPACE FOR EACH TWO EMPLOYEES PER MAXIMUM SHIFT OR ONE SPACE PER EACH 1,000 SQUARE FEET OF FLOOR AREA, WHICH EVER IS GREATER. THE BUILDING IS ~2,445 SQUARE FEET. THE MAXIMUM OCCUPANCY PER SHIFT IS EXPECTED TO BE 4.

Parkhill

THIS DOCUMENT IS RELEASED ON 06/27/2023 FOR THE PURPOSE OF INTERIM REVIEW UNDER THE AUTHORITY OF SPENSER J. HARVEY, P.E., TEXAS LICENSE #138737. IT IS NOT TO BE USED FOR REGULATORY APPROVAL, CONSTRUCTION, BIDDING OR PERMIT PURPOSES.
PARKHILL, SMITH & COOPER, INC. F-560

ISSUED FOR INFORMATIONAL PURPOSES ONLY

Parkhill.com

Citizen Collection Stations
City Of Midland

MIDLAND
Fuel the Energy!

CLIENT
City of Midland, Texas

300 N. Loraine
Midland, TX

PROJECT NO.
6119.21 - WEST
40015.22 - NORTH

#	DATE	DESCRIPTION
-	06/27/2023	City Council Review

North CCS
Signage
Control Plan

C-109

FILE NAME: A:\2022\40015.2203_DSGN\01_DWG\50_CIVIL\C-109-40015-22.dwg LAYOUT NAME: C-109 PRINTED: Monday, June 26, 2023 - 11:15am USER: Shirvey

PACKET 6.424 July 11, 2023

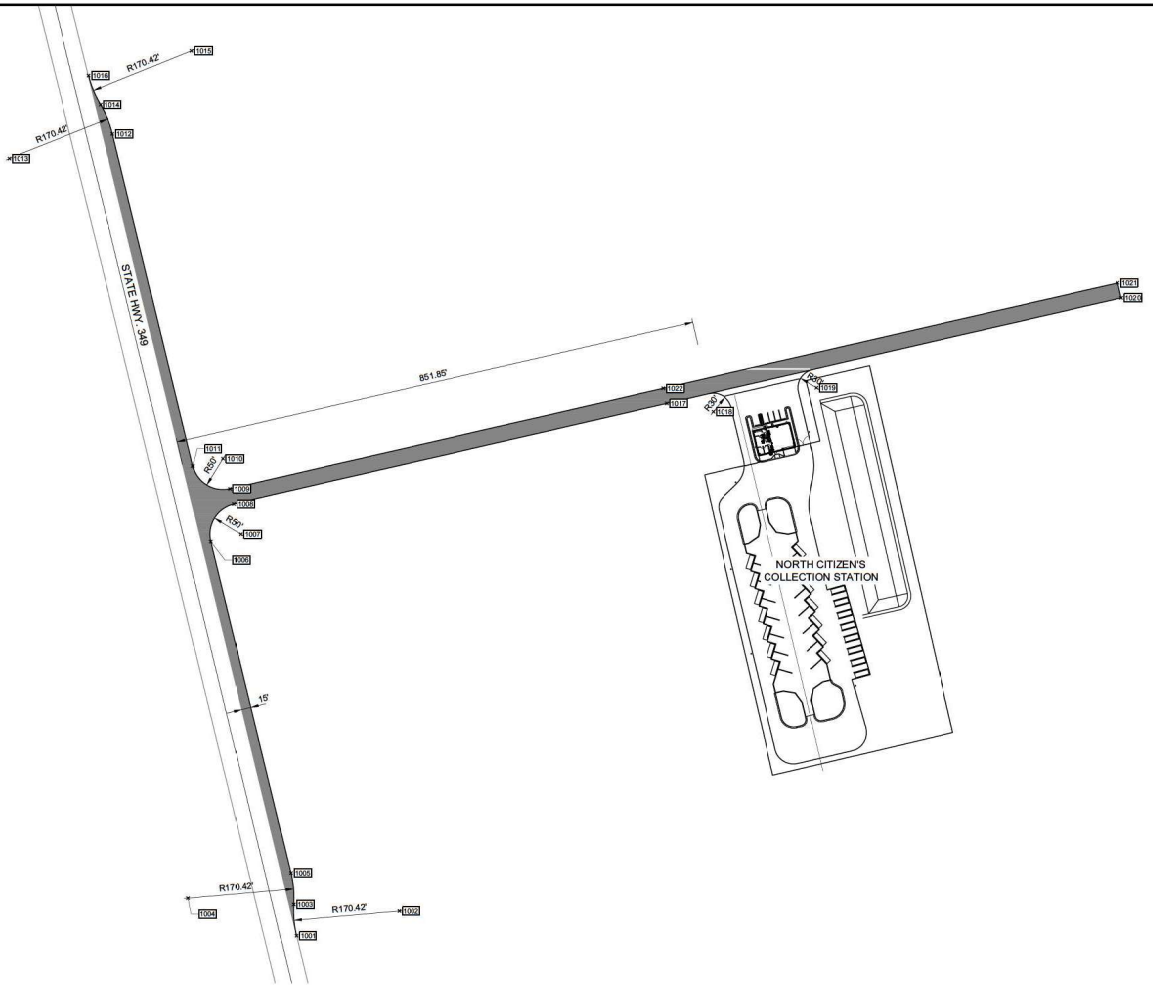

N

0 100' 200'

CONTROL POINT TABLE		
POINT #	NORTHING	EASTING
1001	6739898.53	854483.30
1002	6739138.61	854648.94
1003	6739148.89	854478.83
1004	6739159.18	854308.72
1005	6739199.25	854474.36
1006	6739733.25	854345.16
1007	6739745.01	854393.76
1008	6739793.71	854382.45
1009	6739817.92	854376.17
1010	6739866.62	854364.86
1011	6739854.86	854316.26
1012	6740389.75	854186.85
1013	6740349.67	854021.21
1014	6740436.58	854167.80
1015	6740523.49	854314.39
1016	6740483.42	854148.76
1017	6739955.64	855079.69
1018	6739942.24	855154.57
1019	6739980.79	855320.55
1020	6740125.57	855811.33
1021	6740149.92	855805.68
1022	6739980.00	855074.03

GENERAL NOTES

1. IT SHALL BE THE RESPONSIBILITY OF THE CONTRACTOR TO VERIFY, BOTH HORIZONTALLY AND VERTICALLY, THE LOCATIONS OF ALL EXISTING UTILITIES PRIOR TO CONSTRUCTION, TO MAKE ALL NECESSARY PRECAUTIONS IN ORDER TO PROTECT ALL FACILITIES ENCOUNTERED, AND TO NOTIFY THE ENGINEER PROMPTLY OF ALL CONFLICTS OF THE WORK WITH EXISTING FACILITIES.
2. CONTRACTOR'S TRAFFIC CONTROL PLAN SHALL CONFORM TO ALL TXDOT REQUIREMENTS.

LEGEND

- NEW CONSTRUCTION
- CHAIN LINK FENCE, SEE DETAIL C1\C-505
- 1001 CONTROL POINT AND NUMBER, SEE TABLE THIS SHEET
- HEAVY DUTY ASPHALT, SEE DETAIL D1\C-501

Parkhill

THIS DOCUMENT IS RELEASED ON 06/27/2023 FOR THE PURPOSE OF INTERIM REVIEW UNDER THE AUTHORITY OF SPENSER J. HARVEY, P.E., TEXAS LICENSE #138737. IT IS NOT TO BE USED FOR REGULATORY APPROVAL, CONSTRUCTION, BIDDING OR PERMIT PURPOSES.
PARKHILL, SMITH & COOPER, INC. F-560

ISSUED FOR INFORMATIONAL PURPOSES ONLY

Parkhill.com

Citizen Collection Stations

City Of Midland

MIDLAND
Fuel the Energy!

CLIENT
City of Midland, Texas

300 N. Loraine
Midland, TX

PROJECT NO.
6119.21 - WEST
40015.22 - NORTH

#	DATE	DESCRIPTION
-	06/27/2023	City Council Review

North CCS Site Access Plan

C-110

FILE NAME: A:\2022\40015.22\03_DSGN\01_DWG\50_CIVIL\C-110-40015-22.dwg LAYOUT NAME: C-110 PRINTED: Monday, June 26, 2023 - 11:18am USER: SHarvey

PACKET 6.425 July 11, 2023

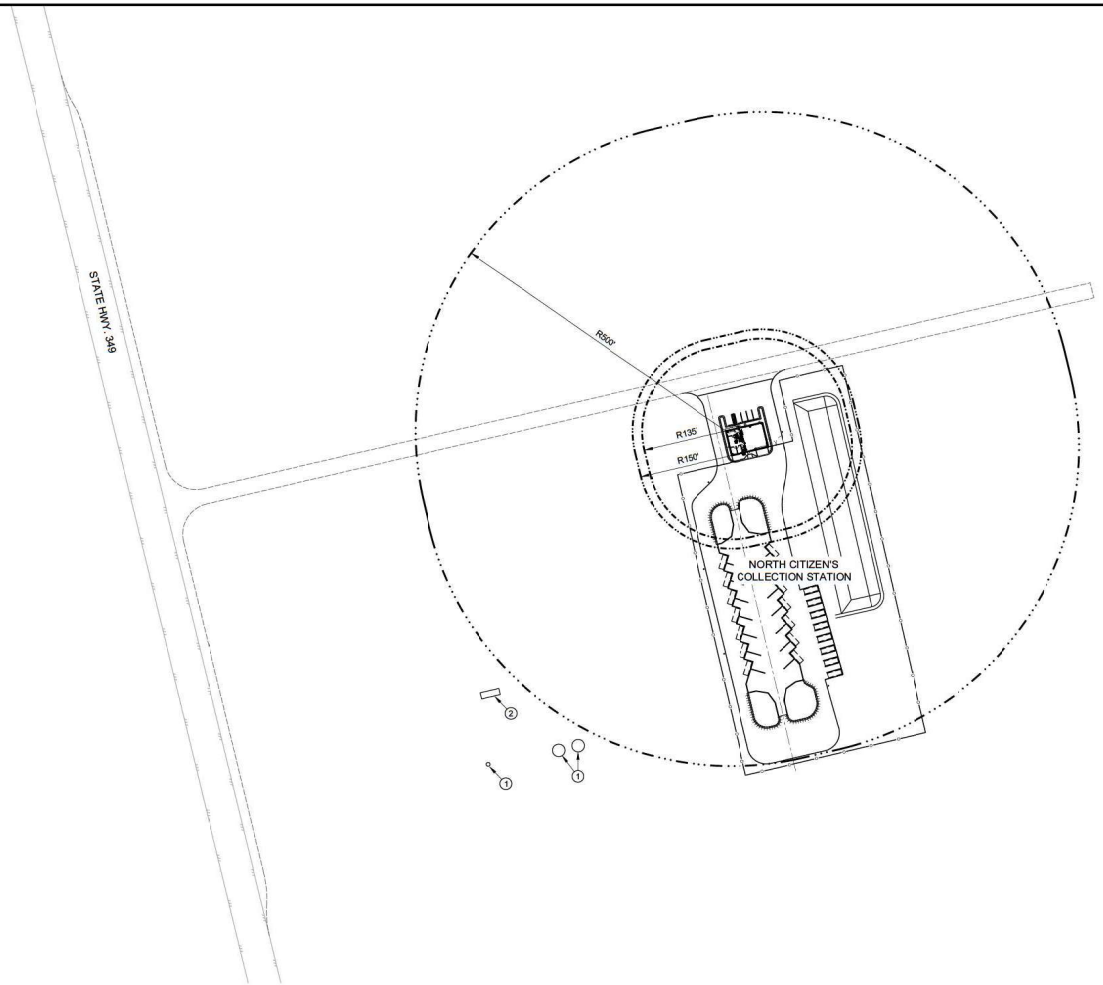

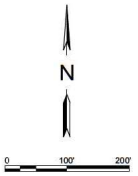

GENERAL NOTES

1. NO OCCUPIED COMMERCIAL STRUCTURE OR OCCUPIED PUBLIC BUILDING SHALL BE WITHIN 500 FEET OF ANY OIL AND GAS WELL.
2. NO PUBLICLY DEDICATED STREET OR ALLEY RIGHT-OF-WAY, WITHIN THE CITY OF MIDLAND SHALL BE WIHTIN 135 FEET OF ANY OIL AND GAS WELL.
3. INNO EVENT SHALL A BUILDING PERMIT BE ISSUED BY THE CITY OF MIDLAND FOR ANY PRIVATE RESIDENCE OR COMMERCIAL BUILDING TO BE CONSTRUCTED, EITHER IN WHOLE OR IN PART, WITHIN 300 FEET OF A PREVIOUSLY PERMITTED BUT UNDRILLED OIL AND GAS WELL OR 135FEET OF AN EXISTING OIL AND GAS WELL OR WITHIN 150 FEET OF A PREVIOUSLY PERMITTED TANK BATTERY

KEY NOTES

AS INDICATED BY: (XX)

1. EXISTING TANK BATTERY
2. EXISTING PUMPJACK

LEGEND

- NEW CONSTRUCTION
- CHAIN LINK FENCE SEE DETAIL C1\C-505
- 135-FT OFFSET FROM NEW BUILDING
- 150-FT OFFSET FROM NEW BUILDING
- 500-FT OFFSET FROM NEW BUILDING

Parkhill

THIS DOCUMENT IS RELEASED ON 06/27/2023 FOR THE PURPOSE OF INTERIM REVIEW UNDER THE AUTHORITY OF SPENSER J. HARVEY, P.E., TEXAS LICENSE #138737. IT IS NOT TO BE USED FOR REGULATORY APPROVAL, CONSTRUCTION, BIDDING OR PERMIT PURPOSES.
PARKHILL, SMITH & COOPER, INC. F-560

ISSUED FOR INFORMATIONAL PURPOSES ONLY

Parkhill.com

Citizen Collection Stations

City Of Midland

MIDLAND
Fuel the Energy!

CLIENT
City of Midland, Texas

300 N. Loraine
Midland, TX

PROJECT NO.
6119.21 - WEST
40015.22 - NORTH

#	DATE	DESCRIPTION
-	06/27/2023	City Council Review

North CCS Proximity to Oil Field Equipment

C-111

FILE NAME: A:\2022\40015.2203_DSGN\01_DWG\650_CIVIL\C-111-40015-22.dwg LAYOUT NAME: C-111 PRINTED: Monday, June 26, 2023 - 11:17am USER: Stanvey

PACKET

6.426

July 11, 2023

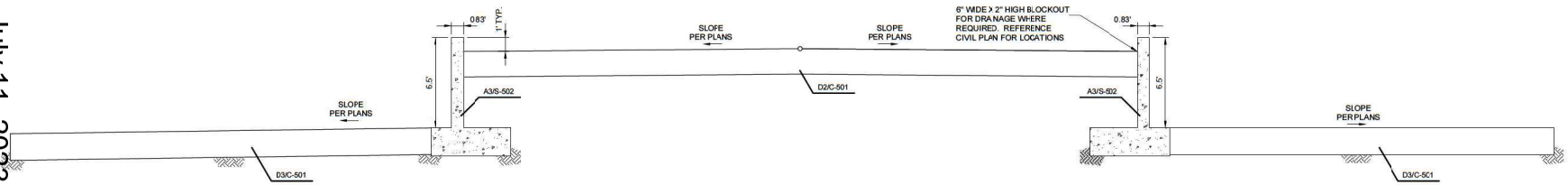

A1 SECTION
SCALE: 1" = 4'

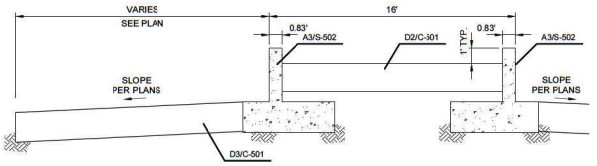

D4 SECTION
SCALE: 1" = 4'

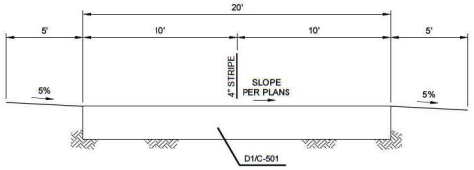

C2 SECTION
SCALE: 1" = 4'

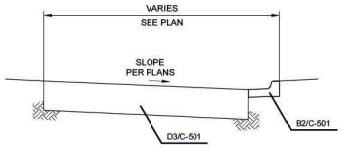

C4 SECTION
SCALE: 1" = 4'

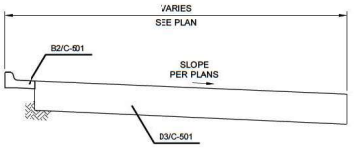

C5 SECTION
SCALE: 1" = 4'

FILE NAME: A:\2021\6119-21\03_DSGN\01_DWG\050_CIVIL\C-301-6119-21.dwg LAYOUT NAME: C-301 PRINTED: Monday, June 26, 2023 - 11:18am USER: SHarvey

Parkhill

THIS DOCUMENT IS RELEASED ON 06/27/2023 FOR THE PURPOSE OF INTERIM REVIEW UNDER THE AUTHORITY OF SPENSER J. HARVEY, P.E., TEXAS LICENSE #138737. IT IS NOT TO BE USED FOR REGULATORY APPROVAL, CONSTRUCTION, BIDDING OR PERMIT PURPOSES. PARKHILL, SMITH & COOPER, INC. F-560

ISSUED FOR INFORMATIONAL PURPOSES ONLY

Parkhill.com

Citizen Collection Stations

City Of Midland

MIDLAND
Fuel the Energy!

CLIENT
City of Midland, Texas

300 N. Loraine
Midland, TX

PROJECT NO.
6119.21 - WEST
40015.22 - NORTH

#	DATE	DESCRIPTION
-	06/27/2023	City Council Review

Site Cross Sections

C-301

PACKET
8.427
July 11, 2023

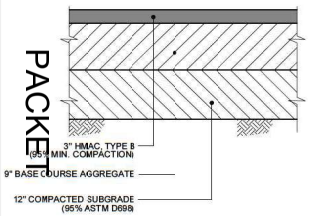

D1 HEAVY DUTY ASPHALT PAVEMENT SECTION
NO SCALE

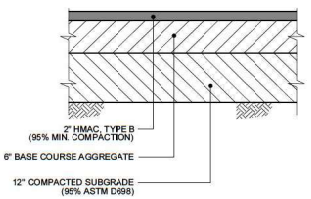

D2 LIGHT DUTY ASPHALT PAVEMENT SECTION
NO SCALE

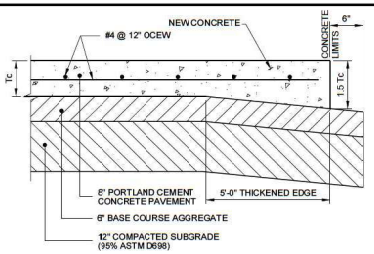

D3 TYPICAL CONCRETE PAVEMENT
NO SCALE

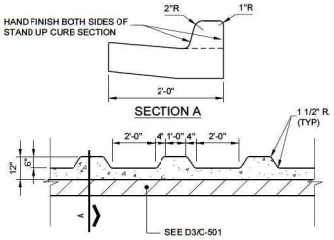

C1 SAWTOOTH CURB & GUTTER
NO SCALE

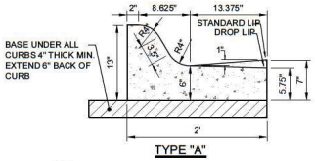

C2 6" CONCRETE CURB
NO SCALE

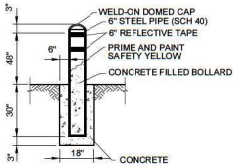

C3 BOLLARD DETAIL
NO SCALE

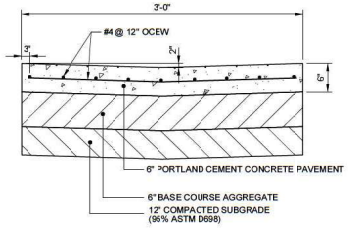

C4 36" VALLEY GUTTER
NO SCALE

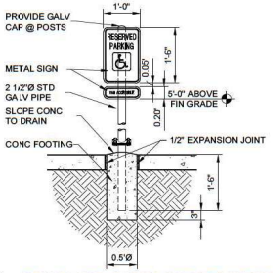

C5 STANDARD SIGNAGE ELEVATION
NO SCALE

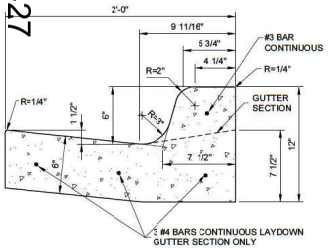

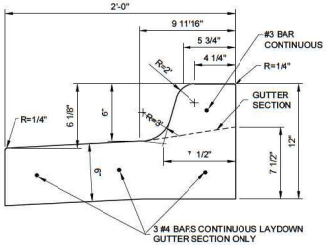

NOTE: SCORE CONCRETE CURB AS SPECIFIED

B1 24" CURB AND GUTTER
NO SCALE

B2 DROP LIP CURB AND GUTTER
NO SCALE

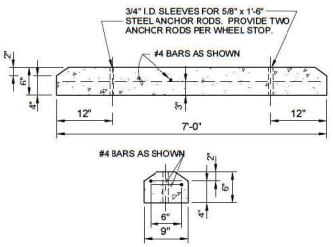

B3 PARKING WHEEL STOP
NO SCALE

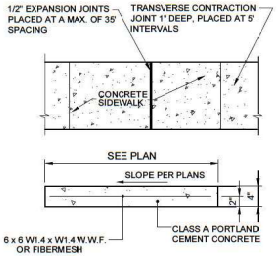

B4 SIDEWALK DETAIL
NO SCALE

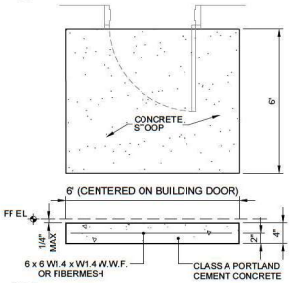

B5 CONCRETE STOOP
NO SCALE

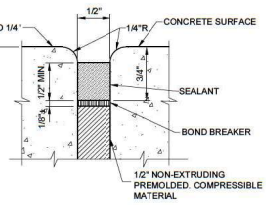

A1 1/2" EXPANSION JOINT SECTION
NO SCALE

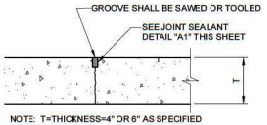

NOTE: T=THICKNESS=4" OR 6" AS SPECIFIED

A2 CONTRACTION JOINT
NO SCALE

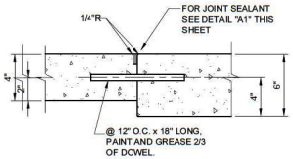

A3 DOWELED EXPANSION JOINT
NO SCALE

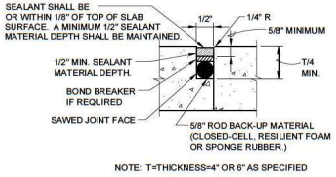

NOTE: T=THICKNESS=4" OR 6" AS SPECIFIED

A4 CONSTRUCTION JOINT
NO SCALE

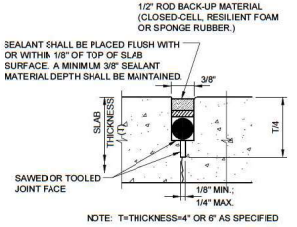

NOTE: T=THICKNESS=4" OR 6" AS SPECIFIED

A5 SAWED/TOOLED CONTRACTION JOINT
NO SCALE

FILE NAME: A:\2021\6119.21\03_DSGN\01_DWG\050_CIVIL\C-501-6119.21.dwg LAYOUT NAME: C-501 PRINTED: Monday, June 26, 2023 - 11:21am USER: Sharvey

Parkhill

THIS DOCUMENT IS RELEASED ON 06/27/2023 FOR THE PURPOSE OF INTERIM REVIEW UNDER THE AUTHORITY OF SPENSER J. HARVEY, P.E., TEXAS LICENSE #138737. IT IS NOT TO BE USED FOR REGULATORY APPROVAL, CONSTRUCTION, BIDDING OR PERMIT PURPOSES.
PARKHILL, SMITH & COOPER, INC. F-560

ISSUED FOR INFORMATIONAL PURPOSES ONLY
Parkhill.com

Citizen Collection Stations

City Of Midland

MIDLAND
Fuel the Energy!

CLIENT
City of Midland, Texas

300 N. Loraine
Midland, TX

PROJECT NO.
6119.21 - WEST
40015.22 - NORTH

#	DATE	DESCRIPTION
-	06/27/2023	City Council Review

Detail Sheet

C-501

PACKET

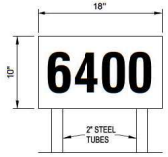

DOUBLE SIDED ADDRESS SIGN 18" WIDE x 10" HIGH BRUSHED ALUMINUM WITH 4 - 8" HIGH RECESSED NUMBERS (9135), 2 - 28" HIGH x 2" STEEL TUBES SET IN 8" x 8" x 12" DEEP CONCRETE FOOTING.

D1 ADDRESS SIGN
NO SCALE

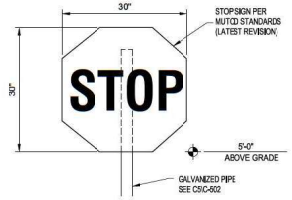

"STOP" SIGN

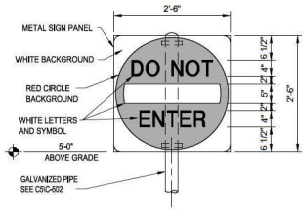

"DO NOT ENTER" SIGN



D2 METAL SIGNS
NO SCALE

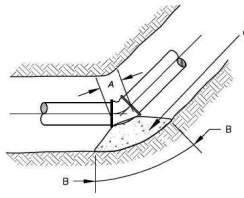

BLOCKING FOR HORIZONTAL BENDS
DESIGN WORKING PRESSURE 150 PSI
SOIL BEARING CAPACITY 2000 PSF

DIA. OF PIPE	DEGREE OF BEND											
	11 1/4°			22 1/2°			45°			90°		
	A	B	*C	A	B	*C	A	B	*C	A	B	*C
2" TO 4"	1'-0"	4"	1'-0"	1'-0"	0"	0'-5"	1'-0"	0"	1'-0"	1'-0"	0"	1'-0"
6"	1'-0"	7"	1'-0"	1'-0"	0"	0'-7"	1'-0"	0"	1'-0"	1'-0"	0"	0'-8"
8"	1'-0"	8"	1'-0"	1'-0"	2"	0'-9"	1'-0"	4"	1'-0"	1'-0"	1"	1'-0"
10"	1'-0"	10"	1'-0"	1'-0"	5"	1'-0"	1'-1"	8"	1'-1"	1'-2"	4"	1'-2"
12"	1'-0"	11"	1'-0"	1'-3"	7"	1'-1"	1'-2"	0"	1'-2"	1'-3"	2"	1'-3"
14"	1'-0"	13"	1'-0"	1'-5"	10"	1'-1"	1'-2"	4"	1'-2"	1'-4"	7"	1'-4"
16"	1'-1"	1"	1'-0"	1'-8"	2"	1'-2"	1'-2"	8"	1'-2"	1'-5"	0"	1'-5"

NOTE

BLOCKING FOR 14" AND 16" 90° BENDS AND ALL BENDS LARGER THEN 16" WILL BE AS SHOWN ON THE PLANS

*C - VERTICAL DEPTH OF CONCRETE BEARING ON UNDISTURBED EARTH

C6 BLOCKING FOR BENDS
NO SCALE

LENGTH A	LENGTH B	LENGTH C	DEPTH
10 FT.	7 FT.	LARGER THAN 24"	2 FT.
9 FT.	7 FT.	SMALLER THAN 24"	1 1/2 FT.

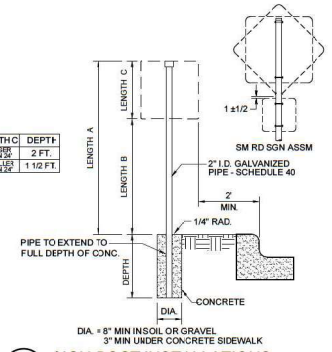

C5 SIGN POST INSTALLATIONS
NO SCALE

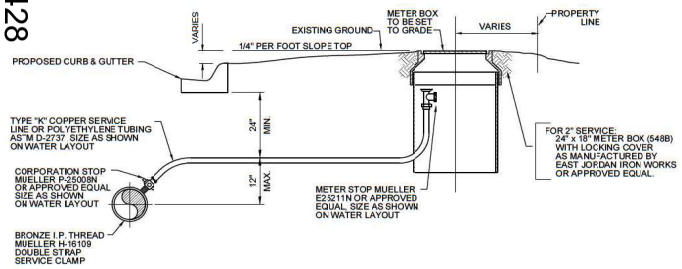

B1 TYPICAL WATER METER SERVICE CONNECTION
NO SCALE

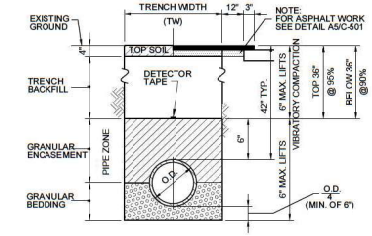

NOTES

A. ALL GRANULAR BEDDING AND ENCASEMENT SHALL BE THOROUGHLY COMPACTED BY MECHANICAL MEANS IN MAXIMUM 6" LIFTS, TO ACHIEVE OPTIMUM CONSOLIDATION OF MATERIAL. THIS MATERIAL SHALL BE CRUSHED STONE ASTM C33 GRADE No. 7 or 8.

B. ALL ASPHALTIC ROADWAY, DRIVEWAY SURFACES, ETC. SHALL BE SAW CUT PRIOR TO CONSTRUCTING WATER LINES / WATER SERVICES.

C. TRENCH BACKFILL MAY BE MATERIAL GENERATED FROM TRENCH EXCAVATION IF SUITABLE MATERIAL.

B3 PIPE ROCK BEDDING
NO SCALE

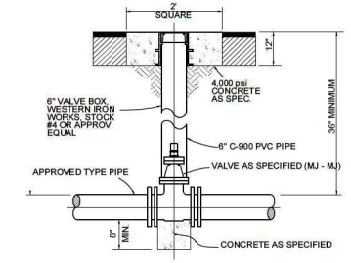

B5 VALVE INSTALLATION
NO SCALE

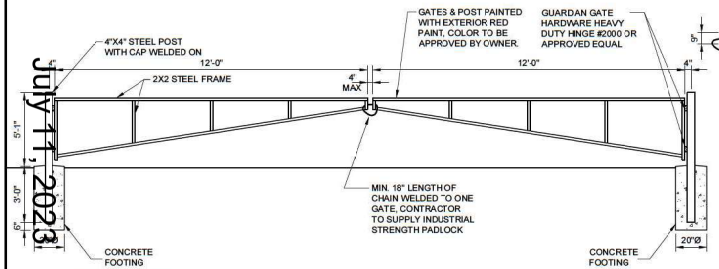

A1 SWING GATE
NO SCALE

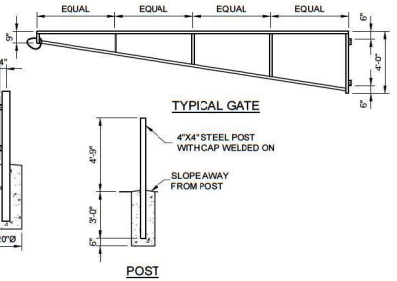

Parkhill

THIS DOCUMENT IS RELEASED ON 06/27/2023 FOR THE PURPOSE OF INTERIM REVIEW UNDER THE AUTHORITY OF SPENSER J. HARVEY, P.E., TEXAS LICENSE #138737. IT IS NOT TO BE USED FOR REGULATORY APPROVAL, CONSTRUCTION, BIDDING OR PERMIT PURPOSES. PARKHILL, SMITH & COOPER, INC. F-560

ISSUED FOR INFORMATIONAL PURPOSES ONLY

Parkhill.com

Citizen Collection Stations

City Of Midland

MIDLAND Fuel the Energy!

CLIENT
City of Midland, Texas

300 N. Loraine
Midland, TX

PROJECT NO.
6119.21 - WEST
40015.22 - NORTH

#	DATE	DESCRIPTION
-	06/27/2023	City Council Review

Detail Sheet

C-502

FILE NAME: A:\2021\6119-21\03_DSGN\01_DWG\050_CIVIL\C-502-6119-21.dwg LAYOUT NAME: C-502 PRINTED: Monday, June 26, 2023 - 11:21am USER: SHarvey

July 11, 2023

6428

PACKET

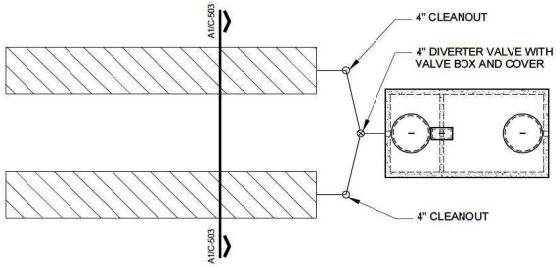

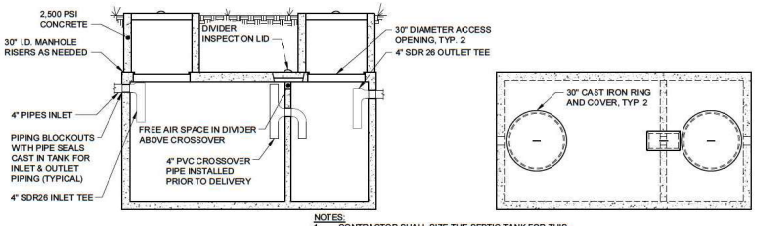

NOTES:
1. CONTRACTOR SHALL SIZE THE SEPTIC TANK FOR THIS FACILITY IN ACCORDANCE WITH ALL RELEVANT REGULATION AND ORDINANCES.
2. CONTRACTOR SHALL PROTECT SEPTIC TANK WITH BOLLARDS.
3. SEPTIC TANK SHALL BE A PRECAST CONCRETE SEPTIC TANK OR APPROVED EQUAL.
4. SEPTIC TANK SHALL HAVE MINIMUM CAPACITY AS RECOMMENDED IN SITE EVALUATION REPORT.

C3 SEPTIC TANK
NOT TO SCALE

DESIGN ANALYSIS

1. CONTRACTOR SHALL OBTAIN A SOIL EVALUATION REPORT FOR SEPTIC SYSTEM SUITABILITY IN THE AREA PRIOR TO DESIGN AND CONSTRUCTION.
2. CONTRACTOR SHALL COORDINATE WITH LOCAL OSSF PERMITTING AUTHORITY TO ACQUIRE ALL NECESSARY AUTHORIZATION OF OSSF SYSTEM.

LEGEND

- 4" SANITARY SEWER (PVC, SDR-26)
- 36" HIGH CAPACITY LEACHING CHAMBER
- 4" DIVERTER VALVE
- 4" CLEAN OUT

C1 ABSORPTIVE DRAINFIELD LAYOUT
1" = 4'-0"

6.429

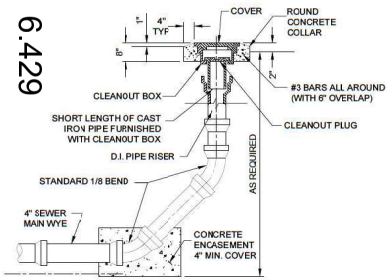

B1 CLEANOUT DETAIL
NOT TO SCALE

July 11, 2023

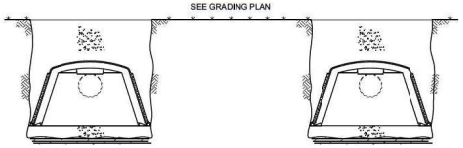

NOTES:
1. CONTRACTOR SHALL OBTAIN A SOIL EVALUATION REPORT FOR SEPTIC SYSTEM SUITABILITY IN THE AREA PRIOR TO DESIGN AND CONSTRUCTION.
2. CONTRACTOR SHALL SIZE THE ABSORPTION FIELD IN ACCORDANCE WITH ALL RELEVANT REGULATION AND ORDINANCES.
3. FOR REDUNDANCY CONTRACTOR SHALL INSTALL TWO ADEQUATELY SIZED ABSORPTION FIELDS SEPARATED BY DIVERTER VALVE.
4. CONTRACTOR SHALL PROTECT ABSORPTION FIELD WITH BOLLARDS.
5. EXCAVATE TRENCHES TO PROPER WIDTH, AND PROPER DEPTH AS REQUIRED BY STATE AND LOCAL CODES.
6. SMOOTH IRREGULARITIES IN THE EXCAVATION. A LEVEL, FLAT SURFACE IS NECESSARY.
7. ASSEMBLE BIODIFFUSER LEACHING CHAMBERS AND UNIVERSAL ENDPLATES TOGETHER IN TRENCH(ES).
8. THE UNIVERSAL END PLATE IS CONSTRUCTED WITH TABS SO THAT THE EARTH FILL ON ONE SIDE WILL HOLD IT SECURELY IN PLACE AGAINST THE BIODIFFUSER.
9. PUNCH OUT PIPE HOLE OPENINGS IN THE END PLATES AS NEEDED AND CONNECT INLET PIPES.
10. FILL SIDEWALL AREA TO TOP OF CHAMBERS WITH NATIVE SOIL (COARSE SAND OR FINE GRAVEL MAY ALSO BE USED; NO HEAVY CLAY, SILT, OR DEBRIS SHALL BE INCLUDED).
11. "WALK IN" FILL TO COMPACT SOIL ALONG SIDES OF BIODIFFUSER.
12. COVER BIODIFFUSER LEACHING CHAMBERS TO A MINIMUM OF 12" AFTER CONSOLIDATION.
13. USE TRAFFIC-RATED CLEANOUT COVER FOR ALL CLEANOUTS ADJACENT TO LEACH FIELD.
14. CONTRACTOR SHALL COORDINATE WITH LOCAL OSSF PERMITTING AUTHORITY TO ACQUIRE ALL NECESSARY AUTHORIZATION OF OSSF SYSTEM.
15. CONTRACTOR SHALL ADHERE TO RECOMMENDATIONS FROM SITE EVALUATION.

A1 TYPICAL TRENCH AND ABSORPTIVE DRAINFIELD CROSS-SECTION
NOT TO SCALE

FILE NAME: A:\2021\6119-21\03_DSGN\01_DWG\050_CIVIL\C-503-6119-21.dwg LAYOUT NAME: C-503 PRINTED: Monday, June 26, 2023 - 11:22am USER: SHarvey

Parkhill

THIS DOCUMENT IS RELEASED ON 06/27/2023 FOR THE PURPOSE OF INTERIM REVIEW UNDER THE AUTHORITY OF SPENSER J. HARVEY, P.E., TEXAS LICENSE #138737. IT IS NOT TO BE USED FOR REGULATORY APPROVAL, CONSTRUCTION, BIDDING OR PERMIT PURPOSES.
PARKHILL, SMITH & COOPER, INC. F-560

ISSUED FOR INFORMATIONAL PURPOSES ONLY
Parkhill.com

Citizen Collection Stations
City Of Midland

MIDLAND
Fuel the Energy!

CLIENT
City of Midland, Texas

300 N. Loraine
Midland, TX

PROJECT NO.
6119.21 - WEST
40015.22 - NORTH

#	DATE	DESCRIPTION
-	06/27/2023	City Council Review

Absorptive Drainfield Details

C-503

PACKET

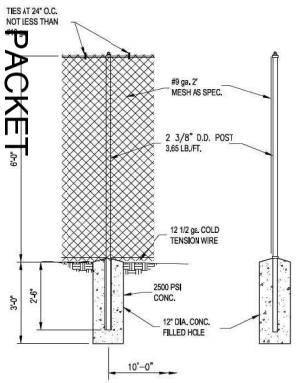

C1 CHAIN LINK FENCE DETAILS
NTS

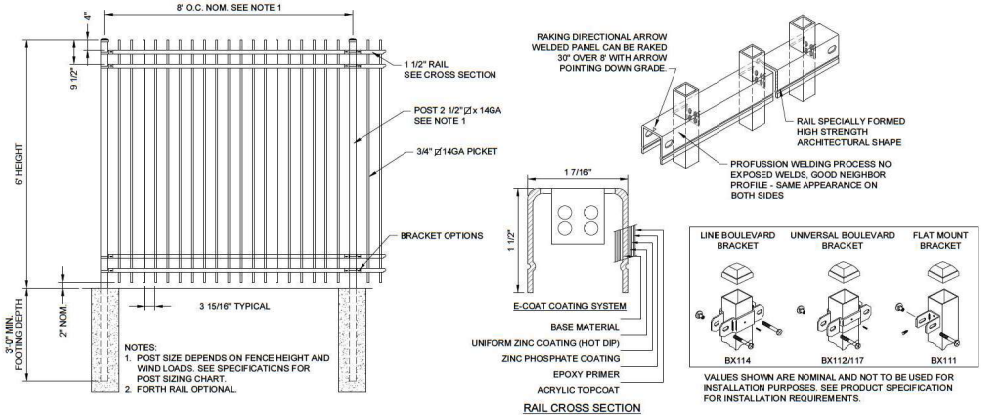

C2 WELDED STEEL PANEL FENCE SECTION AND DETAILS
NTS

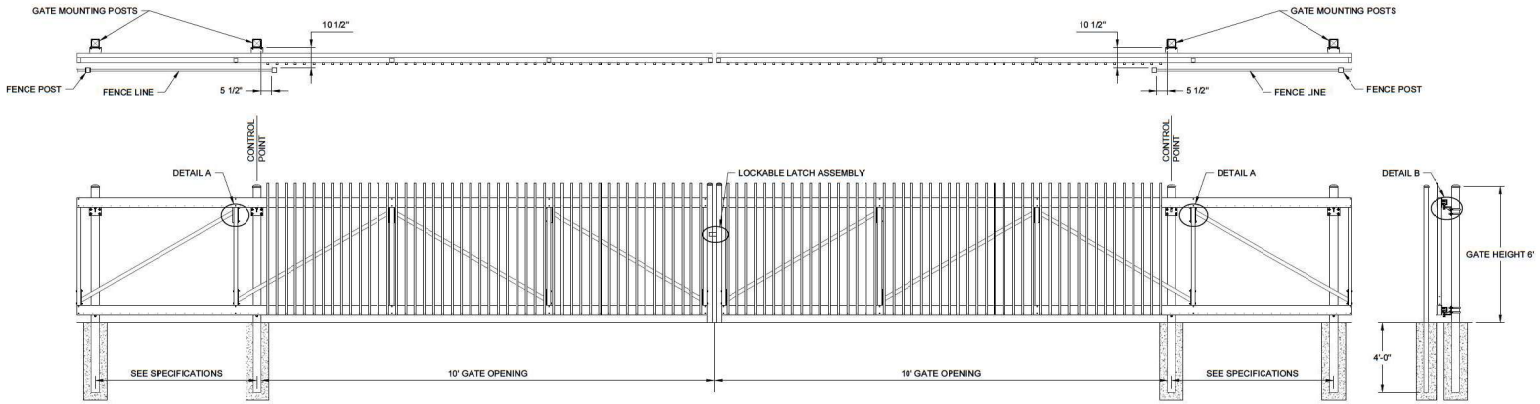

VALUES SHOWN ARE NOMINAL AND NOT TO BE USED FOR INSTALLATION PURPOSES. SEE PRODUCT SPECIFICATION FOR INSTALLATION REQUIREMENTS.

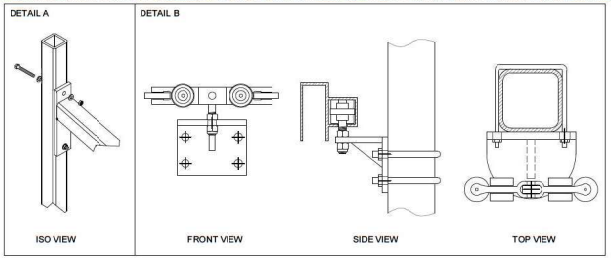

A1 CANTILEVER GATE SECTION AND DETAILS
NTS

6.430

July 11, 2023

FILE NAME: A:\2021\6119-21\03_DSGN\01_DWG\050_CIVIL\C-504-6119-21.dwg LAYOUT NAME: C-504 PRINTED: Monday, June 26, 2023 - 11:22am USER: SHarvey

Parkhill

THIS DOCUMENT IS RELEASED ON 06/27/2023 FOR THE PURPOSE OF INTERIM REVIEW UNDER THE AUTHORITY OF SPENSER J. HARVEY, P.E., TEXAS LICENSE #138137. IT IS NOT TO BE USED FOR REGULATORY APPROVAL, CONSTRUCTION, BIDDING OR PERMIT PURPOSES.
PARKHILL, SMITH & COOPER, INC. F-560

ISSUED FOR INFORMATIONAL PURPOSES ONLY
Parkhill.com

Citizen Collection Stations
City Of Midland

MIDLAND
Fuel the Energy!

CLIENT
City of Midland, Texas

300 N. Loraine
Midland, TX

PROJECT NO.
6119.21 - WEST
40015.22 - NORTH

#	DATE	DESCRIPTION
-	06/27/2023	City Council Review

Fencing Details

C-504

PACKET 6.431 July 11, 2023

CONTROL POINT TABLE			
POINT #	NORTHING	EASTING	DESCRIPTION
101	10680511.78	1730213.02	RET WALL
102	10680527.25	1730201.41	RET WALL
103	10680533.54	1730199.79	RET WALL
104	10680530.13	1730186.52	RET WALL
105	10680515.81	1730182.60	RET WALL
106	10680522.52	1730158.12	RET WALL
107	10680508.53	1730154.29	RET WALL
108	10680515.24	1730129.81	RET WALL
109	10680501.26	1730125.97	RET WALL
110	10680507.97	1730101.50	RET WALL
111	10680493.98	1730097.66	RET WALL
112	10680500.69	1730073.19	RET WALL
113	10680486.70	1730069.35	RET WALL
114	10680493.41	1730044.87	RET WALL
115	10680479.43	1730041.04	RET WALL
116	10680486.14	1730016.56	RET WALL
117	10680472.15	1730012.73	RET WALL
118	10680482.18	1729976.14	RET WALL
119	10680478.70	1729962.62	RET WALL
120	10680466.67	1729965.71	RET WALL
121	10680447.52	1729962.99	RET WALL
122	10680435.91	1729947.53	RET WALL
123	10680430.16	1729925.19	ASPHALT
124	10680430.97	1729924.99	RET WALL
125	10680430.15	1729921.78	CONC CURB
126	10680439.35	1729919.41	RADIUS PNT.
127	10680436.98	1729910.21	CONC CURB
128	10680444.44	1729908.29	CONC CURB
129	10680449.41	1729927.66	RADIUS PNT.
130	10680468.78	1729922.69	CONC CURB
131	10680473.80	1729942.21	CONC CURB
132	10680478.82	1729961.73	CONC CURB
133	10680464.36	1730217.57	RET WALL
134	10680452.32	1730220.66	RET WALL
135	10680448.81	1730206.98	RET WALL
136	10680458.84	1730197.24	RET WALL

CONTROL POINT TABLE			
POINT #	NORTHING	EASTING	DESCRIPTION
137	10680441.16	1730179.03	RET WALL
138	10680451.57	1730168.53	RET WALL
139	10680433.89	1730150.72	RET WALL
140	10680444.29	1730140.62	RET WALL
141	10680426.61	1730122.41	RET WALL
142	10680437.01	1730112.30	RET WALL
143	10680419.33	1730094.10	RET WALL
144	10680429.74	1730083.59	RET WALL
145	10680412.06	1730065.78	RET WALL
146	10680422.46	1730055.68	RET WALL
147	10680404.78	1730037.47	RET WALL
148	10680415.18	1730027.37	RET WALL
149	10680398.13	1730009.81	RET WALL
150	10680391.75	1729984.67	RET WALL
151	10680391.21	1729984.25	CONC CURB
152	10680403.78	1729981.88	RET WALL
153	10680419.24	1729970.26	RET WALL
154	10680421.96	1729951.12	RET WALL
155	10680416.22	1729928.78	ASPHALT
156	10680415.42	1729928.58	RET WALL
157	10680414.59	1729925.77	CONC CURB
158	10680405.39	1729928.14	RADILS PNT.
159	10680403.02	1729918.54	CONC CURB
160	10680387.00	1729923.05	CONC CURB
161	10680393.10	1729946.79	RADILS PNT.
162	10680369.37	1729952.68	CONC CURB
163	10680373.05	1729967.20	CONC CURB
164	10680382.25	1729964.64	RADILS PNT.
165	10680377.90	1729973.28	CONC CURB
166	10680386.22	1729977.57	CONC CURB
167	10680381.86	1729986.01	RADILS PNT.
168	10680391.06	1729983.65	CONC CURB
169	10680429.26	1730354.15	CONCRETE
170	10680535.78	1730326.71	RADILS PNT.
171	10680427.07	1730309.91	CONCRETE
172	10680431.42	1730281.79	CONCRETE

CONTROL POINT TABLE			
POINT #	NORTHING	EASTING	DESCRIPTION
173	10680342.47	1730268.04	RADIUS PNT.
174	10680429.64	1730245.64	CONCRETE
175	10680378.47	1730058.97	CONCRETE
176	10680332.95	1729909.46	CONCRETE
177	10680361.63	1729900.66	RADIUS PNT.
178	10680354.16	1729871.60	CONCRETE
179	10680405.56	1729858.39	CONCRETE
180	10680441.13	1729849.25	CONCRETE
181	10680448.60	1729878.30	RADIUS PNT.
182	10680477.66	1729870.84	CONCRETE
183	10680524.74	1730054.01	CONCRETE
184	10680575.72	1730252.36	CONCRETE
185	10680551.51	1730258.59	RADIUS PNT.
186	10680569.54	1730275.90	CONCRETE
187	10680548.42	1730297.89	CONCRETE
188	10680577.27	1730325.60	RADIUS PNT.
189	10680538.53	1730335.53	CONCRETE
190	10680356.47	1729986.15	CONCRETE
191	10680327.79	1729994.95	CONCRETE
192	10680349.79	1730066.63	CONCRETE
193	10680371.78	1730138.36	CONCRETE
194	10680366.31	1730018.21	CONCRETE
195	10680399.85	1730129.75	CONCRETE
196	10680453.23	1730447.19	CONCRETE
197	10680424.18	1730454.67	RADIUS PNT.
198	10680431.60	1730483.74	CONCRETE
199	10680509.82	1730344.37	RADIUS PNT.
200	10680533.18	1730403.13	RADIUS PNT.
201	10680460.95	1730356.93	RADIUS PNT.
202	10680570.10	1730438.13	CONCRETE
203	10680530.77	1730403.75	RADIUS PNT.
204	10680453.15	1730468.27	CONCRETE
205	10680472.18	1730418.85	CONC CURB
206	10680470.73	1730419.22	RADIUS PNT.
207	10680471.10	1730420.63	CONC CURB
208	10680469.24	1730421.16	CONC CURB

CONTROL POINT TABLE			
POINT #	NORTHING	EASTING	DESCRIPTION
209	10680468.87	1730419.70	RADILS PNT.
210	10680467.42	1730420.08	CONC CURB
211	10680596.71	1730441.58	CONCRETE
212	10680589.29	1730412.22	RADILS PNT.
213	10680560.23	1730419.98	CONCRETE
214	10680514.73	1730343.61	BUILDING
215	10680524.78	1730382.58	BUILDING
216	10680466.38	1730397.63	BUILDING
217	10680456.34	1730358.65	BUILDING
218	10680509.06	1730232.17	RET WALL
219	10680514.81	1730254.11	ASPHALT
220	10680515.61	1730254.30	RET WALL
221	10680516.44	1730257.11	CONC CURB
222	10680525.64	1730255.15	RADILS PNT.
223	10680528.00	1730264.35	CONC CURB
224	10680529.72	1730263.11	CONC CURB
225	10680524.74	1730244.54	RADILS PNT.
226	10680544.11	1730239.66	CONC CURB
227	10680534.07	1730200.11	CONC CURB
228	10680483.51	1730220.29	RET WALL
229	10680495.12	1730235.75	RET WALL
230	10680500.87	1730258.09	ASPHALT
231	10680500.06	1730258.30	RET WALL
232	10680500.88	1730261.11	CONC CURB
233	10680491.88	1730263.87	RADILS PNT.
234	10680494.05	1730273.67	CONC CURB
235	10680486.59	1730274.99	CONC CURB
236	10680481.61	1730255.62	RADILS PNT.
237	10680462.24	1730260.60	CONC CURB
238	10680452.21	1730221.55	CONC CURB
239	10680550.22	1730299.62	LIGHT POLE
240	10680554.48	1730159.69	LIGHT POLE
241	10680519.63	1730024.09	LIGHT POLE
242	10680350.84	1729976.33	LIGHT POLE
243	10680401.13	1730144.78	LIGHT POLE
244	10680434.18	1730383.26	LIGHT POLE

CONTROL POINT TABLE			
POINT #	NORTHING	EASTING	DESCRIPTION
245	10680413.02	1730180.97	CONCRETE
246	10680280.87	1729859.05	FENCE
247	10680324.67	1730001.83	FENCE
248	10680368.47	1730144.60	FENCE
249	10680399.85	1730254.90	FENCE
250	10680431.24	1730365.20	FENCE
251	10680512.17	1730333.44	FENCE
252	10680546.02	1730324.52	FENCE
253	10680572.22	1730426.63	FENCE
254	10680687.12	1730397.29	FENCE
255	10680800.88	1730368.25	FENCE
256	10680588.66	1730403.15	POND
257	10680560.74	1730294.52	POND
258	10680585.18	1730269.07	POND
259	10680529.97	1730054.30	POND
260	10680474.77	1729839.52	POND
261	10680542.84	1729823.59	POND
262	10680566.78	1729916.47	POND
263	10680589.99	1729911.04	POND
264	10680649.46	1730141.73	POND
265	10680708.94	1730372.42	POND
266	10680597.30	1730388.55	POND
267	10680574.03	1730298.01	POND
268	10680593.83	1730277.38	POND
269	10680596.80	1730266.08	POND
270	10680544.36	1730038.38	POND
271	10680504.03	1729857.74	POND
272	10680526.14	1729852.39	POND
273	10680546.27	1729921.76	POND
274	10680571.61	1729937.10	POND
275	10680575.43	1729936.18	POND
276	10680614.15	1730069.62	POND
277	10680652.88	1730203.06	POND
278	10680676.33	1730294.00	POND
279	10680694.32	1730363.77	POND
281	10680453.31	1730352.77	BOLLARD

CONTROL POINT TABLE			
POINT #	NORTHING	EASTING	DESCRIPTION
291	10680525.35	1730388.73	CONC CURB
292	10680468.21	1730403.45	CONC CURB
297	10680459.59	1730389.69	CONC CURB
298	10680451.76	1730359.30	CONC CURB
299	10680454.97	1730349.55	CONC CURB
300	10680473.16	1730343.98	CONC CURB
301	10680474.65	1730343.90	CONC CURB
302	10680493.38	1730338.79	CONC CURB
303	10680507.46	1730335.17	CONC CURB
304	10680519.02	1730342.30	CONC CURB
305	10680526.83	1730372.38	CONC CURB
306	10680534.64	1730402.76	CONC CURB
307	10680533.56	1730404.58	CONC CURB
308	10680531.14	1730405.21	CONC CURB
309	10680529.31	1730404.13	CONC CURB
310	10680523.66	1730362.34	BOLLARD
311	10680520.13	1730362.95	BOLLARD
312	10680528.84	1730382.15	BOLLARD
313	10680525.31	1730383.96	BOLLARD
314	10680474.23	1730353.18	BOLLARD
315	10680458.26	1730357.29	BOLLARD
316	10680452.09	1730356.58	BOLLARD

FOR CONTROL POINT LOCATIONS, SEE SHEET C-101.

FILE NAME: A:\2021\6119-21\03_DSGN\01_DWG\050_CIVIL\C-101-6119-21.dwg LAYOUT NAME: C-601 PRINTED: Monday, June 26, 2023 - 11:23am USER: SHarvey

Parkhill

THIS DOCUMENT IS RELEASED ON 06/27/2023 FOR THE PURPOSE OF INTERIM REVIEW UNDER THE AUTHORITY OF SPENSER J. HARVEY, P.E., TEXAS LICENSE #138737. IT IS NOT TO BE USED FOR REGULATORY APPROVAL, CONSTRUCTION, BIDDING OR PERMIT PURPOSES.
PARKHILL, SMITH & COOPER, INC. F-560

ISSUED FOR INFORMATIONAL PURPOSES ONLY

Parkhill.com

Citizen Collection Stations

City Of Midland

MIDLAND
Fuel the Energy!

CLIENT
City of Midland, Texas

300 N. Loraine
Midland, TX

PROJECT NO.
6119.21 - WEST
40015.22 - NORTH

#	DATE	DESCRIPTION
-	06/27/2023	City Council Review

West CCS
Control Point Tables

C-601

PACKET 6.432 July 11, 2023

CONTROL POINT TABLE

POINT #	NORTHING	EASTING	DESCRIPTION
101	6739741.10	855227.71	RET WALL
102	6739729.93	8552[illegible]2.00	RET WALL
103	6739728.35	8552[illegible]5.67	RET WALL
104	6739715.31	8552[illegible]6.79	RET WALL
105	6739710.77	855223.02	RET WALL
106	6739686.45	8552[illegible]5.78	RET WALL
107	6739682.31	855229.68	RET WALL
108	6739657.98	855222.44	RET WALL
109	6739653.35	855236.34	RET WALL
110	6739629.52	855229.10	RET WALL
111	6739625.38	8552[illegible]3.00	RET WALL
112	6739601.06	855235.76	RET WALL
113	6739596.32	8552[illegible]9.66	RET WALL
114	6739572.59	8552[illegible]2.42	RET WALL
115	6739568.46	855236.32	RET WALL
116	6739544.13	8552[illegible]9.07	RET WALL
117	6739539.99	855262.97	RET WALL
118	6739503.83	855252.15	RET WALL
119	6739490.04	855255.33	RET WALL
120	6739492.37	855267.43	RET WALL
121	6739489.74	855286.51	RET WALL
122	6739474.02	855297.79	RET WALL
123	6739451.56	8553[illegible]3.04	ASPHALT
124	6739451.38	8553[illegible]2.23	RET WALL
125	6739448.15	8553[illegible]2.99	CONC CURB
126	6739445.98	855293.74	RADIUS PNT.
127	6739436.73	855295.90	CONC CURB
128	6739434.98	855288.41	CONC CURB
129	6739454.46	855283.85	RADIUS PNT.
130	6739449.90	855264.38	CONC CURB
131	6739469.53	855259.79	CONC CURB
132	6739489.15	855255.19	CONC CURB
133	6739744.82	855275.22	RET WALL
134	6739747.45	855267.32	RET WALL
135	6739733.70	855290.54	RET WALL
136	6739724.17	855280.29	RET WALL
137	6739705.58	855297.57	RET WALL
138	6739695.71	855286.95	RET WALL
139	6739677.12	855304.23	RET WALL
140	6739667.24	855293.61	RET WALL
141	6739648.86	8553[illegible]0.89	RET WALL
142	6739638.78	855300.27	RET WALL
143	6739620.19	8553[illegible]7.55	RET WALL
144	6739610.32	855306.93	RET WALL
145	6739591.73	855324.21	RET WALL
146	6739581.35	8553[illegible]3.59	RET WALL
147	6739563.27	855330.87	RET WALL
148	6739553.39	855320.24	RET WALL
149	6739535.46	855336.91	RET WALL
150	6739510.49	8553[illegible]2.76	RET WALL

CONTROL POINT TABLE

POINT #	NORTHING	EASTING	DESCRIPTION
151	6739509.76	855341.27	CONC CURB
152	6739507.66	855338.65	RET WALL
153	6739496.39	855314.94	RET WALL
154	6739477.30	855311.81	RET WALL
155	6739454.84	855317.06	ASPHALT
156	6739455.03	855317.87	RET WALL
157	6739451.81	855318.63	CONC CURB
158	6739453.97	855327.88	RADIUS PNT.
159	6739444.72	855338.04	CONC CURB
160	6739448.49	855346.15	CONC CURB
161	6739472.35	855349.57	RADIUS PNT.
162	6739477.93	855364.42	CONC CURB
163	6739492.32	855361.06	CONC CURB
164	6739490.16	855351.81	RADIUS PNT.
165	6739498.50	855356.35	CONC CURB
166	6739502.97	855348.12	CONC CURB
167	6739511.32	855352.66	RADIUS PNT.
168	6739509.16	855343.41	CONC CURB
169	6739880.41	855312.29	CONCRETE
170	6739855.28	855206.19	RADIUS PNT.
171	6739836.12	855314.51	CONCRETE
172	6739808.10	855309.56	CONCRETE
173	6739792.43	855398.18	RADIUS PNT.
174	6739771.93	855318.55	CONCRETE
175	6739584.18	855357.64	CONCRETE
176	6739433.72	855399.90	CONCRETE
177	6739425.54	855371.03	RADIUS PNT.
178	6739396.33	855377.86	CONCRETE
179	6739384.24	855326.18	CONCRETE
180	6739375.88	855296.42	CONCRETE
181	6739405.09	855283.59	RADIUS PNT.
182	6739398.26	855254.38	CONCRETE
183	6739582.42	855211.30	CONCRETE
184	6739781.83	855164.65	CONCRETE
185	6739789.09	855183.49	RADIUS PNT.
186	6739805.23	855171.34	CONCRETE
187	6739826.75	855192.93	CONCRETE
189	6739864.19	855201.64	CONCRETE
190	6739510.91	855378.05	CONCRETE
191	6739519.08	855406.91	CONCRETE
192	6739591.24	855386.48	CONCRETE
193	6739663.41	855366.05	CONCRETE
194	6739543.17	855368.91	CONCRETE
195	6739655.41	855337.80	CONCRETE
196	6739973.94	855291.35	CONCRETE
197	6739980.79	855329.55	RADIUS PNT.
198	6740010.01	855311.77	CONCRETE
199	6739872.38	855232.53	RADIUS PNT.
200	6739960.81	855328.28	POIND
201	6739883.87	855281.66	RADIUS PNT.

CONTROL POINT TABLE

POINT #	NORTHING	EASTING	DESCRIPTION
202	6739967.43	855174.31	CONCRETE
203	6739932.20	855212.88	RADIUS PNT
204	6739966.94	855375.78	POIND
205	6739971.82	855374.67	POIND
206	6739946.02	855271.79	CONC CURB
207	6739954.52	855402.19	POIND
208	6739953.40	855397.32	POIND
209	6739946.36	855273.25	RADIUS PNT
210	6739802.66	855436.93	POIND
211	6739947.82	855272.90	CONC CURB
212	6739650.80	855471.66	POIND
213	6739948.26	855274.77	CONC CURB
214	6739946.80	855275.11	RADIUS PNT
215	6739947.14	855276.57	CONC CURB
216	6739971.46	855147.78	CONCRETE
217	6739942.24	855154.57	RADIUS PNT
218	6739946.07	855183.78	CONCRETE
219	6739871.72	855227.61	BUILDING
220	6739910.91	855218.41	BUILDING
221	6739924.68	855277.12	BUILDING
222	6739885.49	855286.31	BUILDING
223	6739760.19	855230.85	RET WALL
224	6739782.65	855225.59	ASPHALT
225	6739782.46	855224.78	RET WALL
226	6739785.68	855224.03	CONC CURB
227	6739783.52	855214.78	RADIUS PNT
228	6739792.77	855212.61	CONC CURB
229	6739792.37	855210.89	CONC CURB
230	6739772.89	855215.44	RADIUS PNT
231	6739768.34	855195.97	CONC CURB
232	6739726.08	855205.15	CONC CURB
233	6739747.75	855256.14	RET WALL
234	6739763.47	855244.86	RET WALL
235	6739785.93	855239.61	ASPHALT
236	6739786.11	855240.42	RET WALL
237	6739788.34	855239.66	CONC CURB
238	6739791.51	855248.91	RADIUS PNT
239	6739800.76	855246.75	CONC CURB
240	6739802.51	855254.24	CONC CURB
241	6739783.03	855258.80	RADIUS PNT
242	6739787.59	855278.27	CONC CURB
243	6739748.34	855287.46	CONC CURB
244	6739828.52	855191.16	LIGHT POLE
245	6739688.71	855183.86	LIGHT POLE
246	6739479.32	855528.10	FENCE
247	6739754.99	855465.39	FENCE
248	6740030.66	855402.69	FENCE
249	6739552.39	855215.75	LIGHT POLE
250	6739500.96	855383.46	LIGHT POLE
251	6739670.47	855336.85	LIGHT POLE

CONTROL POINT TABLE

POINT #	NORTHING	EASTING	DESCRIPTION
252	6736909.61	855309.00	LIGHT POLE
253	6736706.90	855325.76	CONCRETE
256	6736955.94	855327.39	POND
257	6736949.68	855466.79	POND
258	6736928.12	855453.23	POND
259	6736917.03	855404.48	POND
260	6736942.74	855350.52	POND
261	6736949.39	855379.77	POND
262	6736945.67	855449.24	POND
263	6736939.02	855419.99	POND
264	6736788.92	855365.38	POND
265	6736790.88	855385.25	POND
266	6736797.53	855414.51	POND
267	6736801.54	855432.05	POND
270	6736891.49	855311.55	FENCE
271	6736861.50	855229.95	FENCE
272	6736853.32	855195.91	FENCE
273	6736955.98	855171.94	FENCE
281	6736879.54	855289.21	BOLLARD
291	6736917.06	855217.98	CONC CURB
292	6736930.54	855275.42	CONC CURB
297	6736916.59	855283.74	CONC CURB
298	6736886.04	855290.91	CONC CURB
299	6736876.36	855287.48	CONC CURB
300	6736871.19	855269.18	CONC CURB
301	6736870.84	855267.68	CONC CURB
302	6736866.44	855248.85	CONC CURB
303	6736863.13	855234.70	CONC CURB
304	6736870.21	855223.28	CONC CURB
305	6736900.75	855216.14	CONC CURB
306	6736931.29	855208.99	CONC CURB
307	6736933.09	855210.11	CONC CURB
308	6736933.66	855212.54	CONC CURB
309	6736932.55	855214.34	CONC CURB
310	6736890.35	855219.08	BOLLARD
311	6736891.18	855222.63	BOLLARD
312	6736910.56	855214.34	BOLLARD
313	6736911.39	855217.88	BOLLARD
314	6736880.41	855268.30	BOLLARD
315	6736884.17	855284.36	BOLLARD
316	6736883.32	855290.51	BOLLARD
324	6736931.63	855210.45	RADIUS PNT.
325	6736995.01	855291.89	CONCRETE

FOR CONTROL POINT LOCATIONS, SEE SHEET C-106.

Parkhill

THIS DOCUMENT IS RELEASED ON 06/27/2023 FOR THE PURPOSE OF INTERIM REVIEW UNDER THE AUTHORITY OF SPENSER J. HARVEY, P.E., TEXAS LICENSE #138737. IT IS NOT TO BE USED FOR REGULATORY APPROVAL, CONSTRUCTION, BIDDING OR PERMIT PURPOSES.
PARKHILL, SMITH & COOPER, INC. F-560

ISSUED FOR INFORMATIONAL PURPOSES ONLY
Parkhill.com

Citizen Collection Stations
City Of Midland

MIDLAND
Fuel the Energy!

CLIENT
City of Midland, Texas

300 N. Loraine
Midland, TX

PROJECT NO.
6119.21 - WEST
40015.22 - NORTH

#	DATE	DESCRIPTION
-	06/27/2023	City Council Review

North CCS
Control Point Tables

C-602

FILE NAME: A:\2022\40015.2203_DSGN\01_DWG\60_CIVIL\C-106-40015-22.dwg LAYOUT NAME: C-602 PRINTED: Monday, June 26, 2023 - 11:24am USER: Sharvey

GENERAL REQUIREMENTS

A. REFER TO SPECIFICATIONS FOR SPECIFIC REQUIREMENTS FOR MATERIALS, PRODUCTS, HANDLING, AND INSTALLATION.
B. THE CONTRACTOR IS RESPONSIBLE FOR THE STABILITY OF THE STRUCTURE UNTIL THE CONSTRUCTION OF THE STRUCTURE REACHES ITS FINAL CONDITION, AND ALL DIAPHRAGMS, BRACES, AND/OR SHEAR WALLS ARE INSTALLED.
C. THE CONTRACTOR IS SOLELY RESPONSIBLE FOR THE DESIGN, INSTALLATION, AND REMOVAL OF TEMPORARY BRACING AND CONSTRUCTION SUPPORTS FOR NEW AND EXISTING STRUCTURES, AS NECESSARY TO COMPLETE THE PROJECT. NO PORTION OF THE PROJECT WHILE UNDER CONSTRUCTION IS INTENDED TO BE STABLE IN THE ABSENCE OF THE CONTRACTOR'S TEMPORARY SUPPORTS AND BRACES. THE CONTRACTOR SHALL RETAIN A STRUCTURAL ENGINEER LICENSED IN THE STATE IN WHICH THE PROJECT IS LOCATED TO DESIGN TEMPORARY BRACING AND CONSTRUCTION SUPPORTS.
D. ANY DETAILS, SECTIONS, AND NOTES ON THE DRAWINGS WHERE CONDITIONS ARE SIMILAR TO THOSE INDICATED ON DETAILS, TITLES, OR NOTES.
E. ONLY USE DIMENSIONS INDICATED ON THE DRAWINGS. DO NOT SCALE DRAWINGS.
F. THE CONTRACTOR SHALL VERIFY ALL OPENING SIZES AND LOCATIONS WITH OTHER DISCIPLINES. THE DRAWINGS DO NOT SHOW ALL OPENINGS REQUIRED. ADDITIONAL OPENINGS, BLOCKOUTS, AND SLEEVES MAY BE REQUIRED BY OTHER DISCIPLINES AND SHALL BE CONSTRUCTED USING THE TYPICAL DETAILS AND/OR THE CRITERIA INDICATED ON THE DRAWINGS. OPENINGS REQUIRED BUT NOT SHOWN ON THE STRUCTURAL DRAWINGS MUST BE APPROVED BY THE STRUCTURAL ENGINEER.
G. REFER TO ARCHITECTURAL, CIVIL, MEP, AND VERTICAL TRANSPORTATION CONTRACT DOCUMENTS FOR ADDITIONAL INFORMATION RELATING TO THE COORDINATION OF STRUCTURAL COMPONENTS INCLUDING, BUT NOT LIMITED TO:
   a. CIVIL:
      1. SITING OF BUILDING GRID LINES WITH RESPECT TO CITY BENCHMARKS
      2. SITE PREPARATION
      3. BACKFILLING MATERIALS AND REQUIREMENTS
      4. PAVING AND SITE ELEMENTS OUTSIDE OF BUILDING ENVELOPE
      5. NEW AND EXISTING SITE UTILITIES
   b. ARCHITECTURAL:
      1. PLAN DIMENSIONS AND PROJECT DATUM
      2. SLAB EDGE DIMENSIONS
      3. FINISH ELEVATION
      4. WATERPROOFING AND DAMP-PROOFING DETAILS
      5. RAMP GEOMETRY, PITS, SLAB SLOPES, AND DEPRESSIONS
      6. EMBEDMENTS, INSERTS, BLOCKOUTS, ETC.
      7. EXACT OPENING SIZES FOR PIPES, DUCT, ETC.
      8. CONCRETE FINISHES AND TOPPING SLABS
      9. CONCRETE CURBS AND HOUSEKEEPING PADS
      10. INTERIOR NON-STRUCTURAL MASONRY PARTITIONS
   c. FIRE RATINGS/MEP:
      1. PIPE AND DUCT SIZES FOR OPENINGS AND SLEEVE COORDINATION
      2. FLOOR DRAINS
      3. UNDERFLOOR AND PERIMETER DRAINAGE SYSTEMS
      4. EQUIPMENT CURBS
      5. CONDUITS AND EMBEDMENTS IN WALLS AND SLABS
H. STRUCTURAL COMPONENTS ARE NOT DESIGNED FOR VIBRATING EQUIPMENT. MOUNT VIBRATING EQUIPMENT ON VIBRATING ISOLATORS.

CODES

ALL FABRICATION, ERECTION, AND DESIGN OF STRUCTURAL MEMBERS SHALL MEET THE MINIMUM STANDARDS OF THE FOLLOWING CODES:
A. INTERNATIONAL BUILDING CODE (IBC) 2018
B. AMERICAN CONCRETE INSTITUTE (ACI): ACI 318-14 AND OTHER APPLICABLE ACI STANDARDS
C. AMERICAN INSTITUTE OF STEEL CONSTRUCTION (AISC) STEEL CONSTRUCTION MANUAL - SPECIFICATIONS FOR STRUCTURAL STEEL BUILDINGS - AISI/AISC 360 - 16
D. AMERICAN SOCIETY OF CIVIL ENGINEERS (ASCE) - STANDARD 7-16
E. AMERICAN WELDING SOCIETY (AWS)
F. CONCRETE REINFORCING STEEL INSTITUTE (CRSI)
G. ASTM SPECIFICATIONS
H. AMERICAN IRON AND STEEL INSTITUTE (AISI)

MATERIAL PROPERTIES

STEEL:	
WIDE FLANGE MEMBERS	ASTM A992 - GRADE 50
STEEL PIPE	ASTM A500 GRADE B - 50 KSI
STEEL TUBE	ASTM A500 GRADE B - 50 KSI
MISC STEEL	ASTM A36 - 36 KSI
CONCRETE	
SLABS	4000 PSI
GRADE BEAMS & FOOTINGS	4000 PSI
RETAINING WALLS	4000 PSI
REINFORCING	
TYPICAL	ASTM A-615 - GRADE 60
LOW ALLOY/WELDABLE	ASTM A-706 - GRADE 60
ANCHOR RODS	ASTM F-1554 - GRADE 36 UNO
BOLTS	ASTM A325 (3/4" DIAMETER MINIMUM)
WELD	
STRUCTURAL STEEL	E70XX
LIGHT GAUGE METALS	E60XX

PRE-ENGINEERED BUILDING

A. THE BUILDING SHALL BE A MANUFACTURER'S STANDARD PREFABRICATED METAL STRUCTURE OF THE APPROXIMATE INSIDE AREA SHOWN, EXCEPT AS NOTED. RIGID FRAMES SHALL BE SPACED AS SHOWN ON THE DRAWINGS, BUT OVERALL DIMENSIONS AND CONSTRUCTION DETAILS MAY VARY TO SUIT MANUFACTURER'S STANDARD DESIGN. HOWEVER, MINIMUM WEB THICKNESS OF RIGID FRAMES SHALL BE 3/16 INCH.
B. THE BUILDING SHALL BE DESIGNED AND FABRICATED ACCORDING TO AISC, AWS, AND AISI LATEST SPECIFICATIONS. THE DIMENSIONAL TOLERANCES APPLICABLE TO ROLL FORM STEEL UNDER THE AISC "STANDARD MILL PRACTICE" SECTION SHALL BE REQUIRED IN THE FABRICATION OF THE STEEL BUILDING FRAMES.
C. A COMPLETE DESIGN ANALYSIS SHOWING ALL CALCULATIONS FOR THE RIGID FRAMES, GIRTS, PURLINS, AND X-BRACING FOR WIND AND SEISMIC LOADS AND A LAYOUT OF ANCHOR BOLTS AND OTHER EMBEDDED ITEMS SHALL BE SUBMITTED FOR APPROVAL WITH THE SHOP DRAWINGS. SHOP DRAWINGS SHALL INCLUDE DETAILS OF MAIN MEMBERS, TYPICAL CONNECTIONS (SHOWING BOLT HOLES AND WELDS), AND ERECTION DRAWINGS.
D. THE BUILDING SHALL BE DESIGNED TO SUPPORT ALL MECHANICAL EQUIPMENT INCLUDING HEATERS, SPRINKLERS, EXHAUST SYSTEMS, AND ALL OTHER SUCH DEVICES. ADDITIONAL GIRTS OR PURLINS SHALL BE PROVIDED IN CONVENIENT LOCATIONS FOR ATTACHMENT OF ALL MECHANICAL EQUIPMENT.

DESIGN LOADS

A. ALL APPLICABLE DEAD LOADS
B. LIVE LOADS

ROOF LIVE LOAD:	20 PSF
FLOOR LIVE LOAD:	100 PSF
MEZZANINE LIVE LOAD:	125 PSF

C. COLLATERAL LOAD: 10 PSF
D. SNOW LOAD: PER ASCE 7-10

GROUND SNOW LOAD, P_g:	5 PSF
FLAT-ROOF SNOW LOAD, P_f:	5 PSF
DRIFT SURCHARGE LOAD(S, P_d:	NA
SNOW EXPOSURE FACTOR, C_e:	C
SNOW LOAD IMPORTANCE FACTOR, I_s:	1
THERMAL FACTOR, C_t:	1.0
SLOPE FACTOR(S), C_s:	1.0
WIDTH OF SNOW DRIFT(S), w:	NA

E. LATERAL SOIL PRESSURE:

AT- REST	56 PCF
ACTIVE	37 PCF
PASSIVE	360 PCF

F. WIND LOAD: PER ASCE 7-16

BASIC WIND SPEED	105 MPH
EXPOSURE	C
CATEGORY	II

G. SEISMIC LOADS: PER ASCE 7-16

BUILDING CATEGORY:	II
SEISMIC IMPORTANCE FACTOR, I_E:	1.00
MAPPED SPECTRAL RESPONSE ACCELERATION, S_S:	12.4%g
MAPPED SPECTRAL RESPONSE ACCELERATION, S_1:	3.3%g
SITE CLASS:	D
SPECTRAL RESPONSE COEFFICIENT, S_{DS}:	13.2
SPECTRAL RESPONSE COEFFICIENT, S_{D1}:	5.3
SEISMIC DESIGN CATEGORY*:	A
BASIC SEISMIC FORCE RESISTING SYSTEM:	
MEZZANINE	SHEAR WALL
PEMB	MF
DESIGN BASE SHEAR, V: MEZZZANINE	0.4 k
SEISMIC RESPONSE COEFFICIENT, C:	0.01
RESPONSE MODIFICATION FACTOR, R:	A-15
ANALYSIS PROCEDURE USED:	EQUIVALENT LATERAL FORCE

H. DISTRIBUTE THE MAXIMUM LOAD HUNG FROM ANY STRUCTURAL MEMBER FOR MEP DUCTWORK, PIPING, ETC. OVER THE MEMBER'S TRIBUTARY AREA IN A WAY THAT THE DESIGN SUPERIMPOSED DEAD LOADS LISTED IN CONTRACT DOCUMENTS ARE NOT EXCEEDED. HANGING ITEMS FROM DECK IS STRICTLY PROHIBITED. THE CONTRACTOR SHALL COORDINATE THE LOADS OF ALL TRADES AND PROVIDE ADDITIONAL SUPPORT OR DISTRIBUTION FRAMING AS REQUIRED TO ACHIEVE THE ALLOWABLE LOAD DISTRIBUTION.

FOUNDATIONS

A. ALL FOOTINGS ARE DESIGNED ON AN ALLOWABLE SOIL BEARING PRESSURE OF 3,500 POUNDS PER SQUARE FOOT AT A MINIMUM DEPTH OF 3.0 FOOT BELOW 100'-0" FINISHED FLOOR ELEVATION.
B. PLACE 4 INCH GRANULAR FILL, MEETING IDOT ITEM 247, GRADE 3, UNDER VAPOR BARRIER UNDER ALL UNSUPPORTED FLOOR SLABS ON FILL, EXCEPT AS OTHERWISE NOTED.
C. ALL EXTERIOR GRADE BEAMS SHALL BE CHAMFERED 3/4 INCH ON THE EXPOSED EXTERIOR CORNER.
D. REFER TO THE SOIL REPORT FOR SUBSOIL CONDITIONS THAT MAY BE ENCOUNTERED IN THE INSTALLATION OF FOUNDATIONS, AND OTHER INFORMATION RELEVANT TO FOUNDATIONS AND SITE PREPARATION.
E. DESIGN OF FOUNDATIONS AND STRUCTURAL COMPONENTS IN CONTACT WITH SOIL, AT THE WEST SIDE, IS BASED ON THE RECOMMENDATIONS GIVEN IN THE FOLLOWING GEOTECHNICAL REPORT:

REPORT BY	:	BEYOND ENGINEERING AND TESTING
DATE OF REPORT	:	JANUARY 5, 2022
REPORT NUMBER	:	GT21111061

SITE PLANNING AND FILL NOTES

A. PROPER CONSTRUCTION DRAINAGE SHALL BE PROVIDED AND MAINTAINED AT ALL TIMES DURING FOUNDATION CONSTRUCTION. PONDING OF WATER AT THE SITE SHOULD BE AVOIDED DURING ALL PHASES OF CONSTRUCTION.
B. REMOVE SURFACE DEBRIS, VEGETATION, ORGANIC TOPSOIL, LOOSE SOIL AND MAJOR ROOT SYSTEMS. REMOVAL SHALL EXTEND 5 FOOT BEYOND BUILDING AREAS, CITIZENS DISPOSAL AREA AND 2 FOOT BEYOND PAVING AREAS.
C. COMPACT RESULTING SUBGRADE AND VERIFY STABILITY USING A PROOF-ROLL TEST. CONDUCT A PROOF-ROLL TESTS AS INDICATED IN THE GEOTECHNICAL REPORT. FOR SOFT SPOTS AND AREAS THAT EXHIBIT PUMPING, SCARIFY AND RECOMPACT TOP 8 INCHES OF SUBGRADE TO MINIMUM OF 98 PERCENT OF ASTM D698 OR ASTM D1557 MAXIMUM DENSITY.
D. BUILDING PAD SHALL BE RAISED TO PROPER ELEVATION USING SATISFACTORY SOILS COMPACTED IN 8 INCH MAXIMUM LOOSE LIFTS TO 98 PERCENT OF ASTM D698 MAXIMUM DENSITY, OR AS PRESCRIBED BY THE GEOTECHNICAL ENGINEER. MOISTURE SHALL BE CONTROLLED TO WITHIN 2 PERCENT OF OPTIMUM FOR COHESIVE SOILS AND 3 PERCENT FOR COHESIONLESS SOILS PER D698 DURING COMPACTION OPERATIONS.
E. FOOTINGS MAY BE BACK FILLED USING SATISFACTORY SOILS AS SPECIFIED, COMPACTED IN 8 INCH MAXIMUM LOOSE LIFTS TO 98 PERCENT OF MAXIMUM DENSITY PER ASTM D698.
F. UTILITY TRENCHES WITHIN BUILDING OR PAVING AREAS SHALL BE FILLED PER THE ABOVE CRITERIA.

CONCRETE

A. ALL EXTERIOR CONCRETE, INCLUDING WALKS AND CURBS OUTSIDE THE BUILDING LINE, SHALL BE AIR ENTRAINED.
B. PROVIDE STANDARD BAR CHAIRS AND SPACERS FOR REINFORCING AT A MAXIMUM OF 4 FOOT CENTERS FOR ALL SLABS AND BEAMS.
C. LAP CONTINUOUS UNSCHEDULED REINFORCING BARS AS FOLLOWS: BOTTOM BARS IN MEMBERS SUPPORTED BY COLUMNS OR FOOTINGS - 12 INCH AT SUPPORTS ONLY; ALL OTHERS - (36) BAR DIAMETERS MINIMUM.
D. ALL HORIZONTAL REINFORCING IN CONTINUOUS FOOTINGS AND WALLS SHALL BE CONTINUOUS AROUND CORNERS OR HAVE CORNER BARS OF THE SAME SIZE AND SPACING AS THE HORIZONTAL BARS AND LAP A MINIMUM OF (30) BAR DIAMETERS, OR 24 INCH MINIMUM.
E. THERE SHALL BE NO HORIZONTAL CONSTRUCTION JOINTS IN CONCRETE BEAM, FOOTING, OR SLAB POURS. ALL CONSTRUCTION JOINTS SHALL BE MADE WITHIN THE CENTER THIRD OF SPANS WITH VERTICAL BULKHEADS. THE LOCATION OF CONSTRUCTION JOINTS SHALL BE APPROVED BY THE STRUCTURAL ENGINEER.
F. WHERE CONCRETE PILASTERS, COLUMNS, OR BEAMS ARE TO BE LEFT EXPOSED AND DO NOT ABUT OTHER MATERIALS, EXTERNAL CORNERS SHALL BE CHAMFERED 3/4 INCH.
G. WHERE SLEEVES ARE REQUIRED THROUGH BEAMS OR JOISTS, VERTICAL OR HORIZONTAL PIPE SLEEVES SHALL BE PROVIDED AS SPECIFIED UNDER THE MECHANICAL AND ELECTRICAL SECTIONS OF THE SPECIFICATION. LOCATION OF ALL SUCH SLEEVES SHALL BE APPROVED BY THE STRUCTURAL ENGINEER. WHERE NECESSARY FOR STRUCTURAL REASONS, BEAMS OR JOISTS SHALL BE WIDENED TO COMPENSATE FOR THE LOSS OF CROSS SECTION DUE TO THE SLEEVE. ADD ONE EXTRA TIE OR STIRRUP ON BOTH SIDES OF EACH SLEEVE. WHERE TWO OR MORE PIPE SLEEVES ARE REQUIRED THROUGH CONCRETE SLABS, A DISTANCE EQUAL TO THREE TIMES THE LARGER SLEEVE DIAMETER SHALL BE PROVIDED BETWEEN SLEEVES.

CONCRETE MIX DESIGNS

ALL CONCRETE TO BE NORMAL WEIGHT CONCRETE, MAXIMUM FLY ASH CONTENT TO BE NO MORE THAN 25% OF TOTAL CEMENTITIOUS WEIGHT. IF TYPE 1L CEMENT USED, MIX DESIGN OR STRENGTH RESULTS MUST BE FOR TYPE 1L CEMENT.

A. CONTINUOUS FOOTINGS, GRADE BEAMS AND TIE BEAMS:
   a. CEMENT TYPE I-II.
   b. MINIMUM COMPRESSIVE STRENGTH:
      1. 4,000 PSI AT 28 DAYS
   c. MAXIMUM W/C RATIO:
      1. 0.50
   d. MAXIMUM AGGREGATE SIZE:
      1. 3/4 INCH
   e. SLUMP LIMIT:
      1. 4 INCHES SLUMP, ± 1 INCH
B. RETAINING WALLS:
   a. CEMENT TYPE I-II.
   b. MINIMUM COMPRESSIVE STRENGTH:
      1. 4,000 PSI AT 28 DAYS
   c. MAXIMUM W/C RATIO:
      1. 0.50
   d. MAXIMUM AGGREGATE SIZE:
      1. 3/4 INCH
   e. SLUMP LIMIT:
      1. 6 INCHES PLUS OR MINUS 1 INCH FOR CONCRETE WITH A VERIFIED SLUMP OF 5 INCHES, ± 1 INCH
C. SLABS-ON-GRADE
   a. CEMENT TYPE I-II.
   b. MINIMUM COMPRESSIVE STRENGTH:
      1. 4,000 PSI AT 28 DAYS
   c. MAXIMUM W/C RATIO:
      1. 0.45
   d. MAXIMUM AGGREGATE SIZE:
      1. 3/4 INCH
   e. SLUMP LIMIT:
      1. 6 INCHES PLUS OR MINUS 1 INCH FOR CONCRETE WITH A VERIFIED SLUMP OF 5 INCHES ± 1 INCH
   f. AIR CONTENT:
      1. DO NOT ALLOW AIR CONTENT OF TROWEL-FINISHED FLOORS TO EXCEED 3%
   g. MINIMUM CEMENTITIOUS MATERIALS CONTENT:
      1. MINIMUM CEMENTITIOUS MATERIAL SHALL BE PER TABLE 4.2.2.1 IN ACI 301 RELATIVE TO THE MAXIMUM AGGREGATE SIZE

FLOOR SLABS

A. ELEVATED FLOOR SLABS SHALL BE POURED MONOLITHICALLY OR POUR STOPS MAY BE PLACED AT MOMENT FRAME LINES.
B. CURING SLABS ON GRADE
   a. SLABS ON GRADE SHALL BE WET CURED FOR 7 DAYS AFTER CONCRETE PLACEMENT. WET CURING SHALL BEGIN IMMEDIATELY AFTER FINAL FINISHING OF SLAB SURFACE AND SHALL CONSIST OF CONTINUOUS MISTING BY SPRINKLER OR WET BURLAP. CONTRACTOR SHALL APPLY APPROVED CURING COMPOUND.
C. CURING ELEVATED SLABS
   a. ELEVATED SLABS SHALL BE CURED BY APPLYING SHEETS OF PLASTIC OVER THE SURFACE FOR 7 DAYS AFTER CONCRETE PLACEMENT. CONTRACTOR SHALL APPLY APPROVED CURING COMPOUND AFTER REMOVAL OF PLASTIC SHEETS.
D. FLOOR SLAB ISOLATION JOINTS SHALL BE 30 POUND FELT, UNLESS NOTED OTHERWISE.
E. CONCRETE FLOOR SLAB ON GRADE SHALL BE PLACED IN LANES. SPACING OF JOINTS SHALL BE AS SHOWN ON THE FOUNDATION PLANS. CONSTRUCTION JOINTS SHALL BE USED FOR THE JOINTS BETWEEN LANES, WHILE WEAKENED PLANE JOINTS SHALL BE USED ACROSS EACH LANE.
F. CONSTRUCTION AND CONTRACTION JOINTS SHALL BE LOCATED AS INDICATED ON THE PLAN. WHERE CONTRACTION JOINTS ARE INDICATED, SAW CUTTING SHALL BEGIN AS SOON AS POSSIBLE WITHOUT DAMAGING THE SLAB.

REINFORCEMENT AND MISC STEEL

A. UNLESS OTHERWISE NOTED, CONCRETE COVER OVER STEEL REINFORCEMENT SHALL CONFORM TO THE MINIMUMS REQUIRED BY THE AFOREMENTIONED EDITION OF ACI 318.
B. REINFORCEMENT DETAILING AND PLACEMENT SHALL CONFORM TO ACI 318 AND ACI 315, EXCEPT WHERE OTHERWISE INDICATED.
C. SUBSTITUTION OF EXPANSION ANCHORS FOR EMBEDDED ANCHORS SHOWN ON THE DRAWINGS WILL NOT BE PERMITTED.
D. ALL REINFORCING STEEL, ANCHOR BOLTS, AND EMBEDDED ANCHORS SHALL BE SECURELY SET IN PLACE PRIOR TO PLACEMENT OF CONCRETE.

LIGHT GAUGE STEEL

A. PRODUCT IDENTIFICATION
   a. NOMENCLATURE

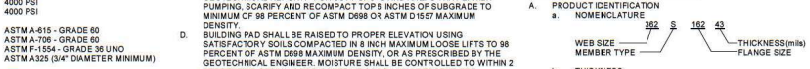

   b. THICKNESS:

GAUGE	DESIGN	MININUM	AISI
20	0.0346"	0.0329"	33 mils
18	0.0451"	0.0428"	43 mils
16	0.0566"	0.0533"	54 mils
14	0.0713"	0.0677"	68 mils
12	0.1017"	0.0966"	97 mils

B. STUD FRAMING
   a. ALL FIELD CUTTING OF STUDS MUST BE DONE BY SAWING, SHEARING, OR PLASMA CUTTING. OTHER TORCH CUTTING METHODS OF COLD-FORMED STEEL MEMBERS ARE UNACCEPTABLE.
   b. NOTCHING OR COPING OF STUDS IS NOT ALLOWED, UNLESS NOTED OTHERWISE.
   c. FRAMING FABRICATOR IS TO ENSURE PUNCH OUT ALIGNMENT WHEN ASSEMBLING LATERAL BRACING AND FIELD CUTTING STUDS TO LENGTH. LATERAL BRACING MUST BE INSTALLED AT THE TIME THE WALL IS ERECTED.
   d. ALL HEADERS ARE TO BE CONSTRUCTED WITH UNPUNCHED MATERIAL ONLY.
   e. THE MAXIMUM ALLOWABLE GAP (MEASURED BETWEEN THE WEB OF THE STUD AND THE WEB OF THE TRACK) FOR A STUD SEATED IN A TRACK IS 1/8". PRESSURE SHOULD BE APPLIED TO NEST THE STUDS INTO THE TRACK UNTIL THE AFOREMENTIONED TOLERANCE IS ACHIEVED.
C. CONNECTIONS
   a. FOR SCREW CONNECTIONS A MINIMUM OF 1.5 x SCREW DIAMETER CLEARANCE MUST BE MAINTAINED FROM ALL EDGES OF STEEL MEMBERS. A MINIMUM OF 3 x SCREW DIAMETER ON-CENTER SPACING MUST BE MAINTAINED BETWEEN ADJACENT SCREWS.
   b. IT IS THE RESPONSIBILITY OF THE GENERAL CONTRACTOR TO VERIFY THAT FASTENERS ARE INSTALLED ACCORDING TO THE MANUFACTURER'S INSTRUCTIONS.

POST-INSTALLED ANCHORS

EXCEPT WHERE INDICATED ON THE DRAWINGS, POST-INSTALLED ANCHORS SHALL CONSIST OF THE FOLLOWING ANCHOR TYPES, AS PROVIDED BY HILTI, INC. OR APPROVED EQUAL. CONTACT HILTI AT (800) 879-8000 FOR PRODUCT RELATED QUESTIONS.

A. ANCHORS TO CONCRETE
   a. ADHESIVE ANCHORS FOR CRACKED AND UNCRACKED CONCRETE USE:
      1. HILTI HIT-HY 200 V3 SAFE SET SYSTEM WITH HILTI HIT-Z ROD PER ICC ESR-3187.
      2. HILTI HIT-HY 200 V3 SAFE SET SYSTEM WITH HILTI HOLLOW DRILL BIT (TE-CD OR TE-YD) AND VC 140 VACUUM SYSTEM WITH HAS-E-55 THREADED ROD PER ICC ESR-3187.
      3. HILTI HIT-HY 200 V3 SAFE SET SYSTEM WITH HILTI ROUGHENING TOOL (HIT RT) WITH HAS-E THREADED ROD PER ICC ESR-3187 FOR DIAMOND CORED HOLES.
      4. HILTI HIT-RE-500-V3 SAFESET SYSTEM WITH HILTI HOLLOW DRILL BIT (TE-CD OR TE-YD) AND VC 140 VACUUM WITH HAS-E-55 THREADED ROD PER ICC ESR-3814 FOR SLOW CURE APPLICATIONS.
      5. HILTI HIT-RE 500-V3 SAFESET SYSTEM WITH HILTI ROUGHENING TOOL (HIT RT) WITH HAS-E THREADED ROD PER ICC EST-3814 FOR DIAMOND CURED HOLES
   b. MEDIUM DUTY MECHANICAL ANCHORS FOR CRACKED AND UNCRACKED CONCRETE USE:
      1. HILTI KWIK HUS EZ AND KWIK HUS EZ-I SCREW ANCHORS SAFE SET SYSTEM WITH HOLLOW DRILL BIT AND VACUUM SYSTEM PER ICC ESR-3027.
      2. HILTI KWIK BOLT-TZ2 EXPANSION ANCHORS SAFE SET SYSTEM WITH HOLLOW DRILL BIT AND VACUUM SYSTEM AND SI-AT-A22 WITH ADAPTIVE TORQUE PER ICC ESR-1017.
      3. HILTI KWIK BOLT 3 (CARBON STEEL) OR KWIK BOLT 3 (OTHERS), EXPANSION ANCHOR SAFE SET SYSTEM WITH HOLLOW DRILL BIT AND VACUUM SYSTEM AND SI-AT-A22 WITH ADAPTIVE TORQUE (UNCRACKED CONCRETE ONLY) PER ICCC ESR-2302.
   c. HEAVY DUTY MECHANICAL ANCHORS FOR CRACKED AND UNCRACKED CONCRETE USE:
      1. HILTI HDA UNDERCUT ANCHORS PER ICC ESR 1546.
      2. HILTI HSL-3 EXPANSION ANCHORS PER ICC ESR 1545
B. REBAR DOWELING INTO CONCRETE
   a. ADHESIVE ANCHORS FOR CRACKED AND UNCRACKED CONCRETE USE:
      1. HILTI HIT-HY 200 V3 SAFE SET SYSTEM WITH HOLLOW DRILL BIT (TE-CD OR TE-YD) AND VC 140 VACUUM SYSTEM WITH CONTINUOUSLY DEFORMED REBAR PER ICC ESR-3187.
      2. HILTI HIT-HY 200 V3 SAFESET SYSTEM WITH HILTI ROUGHENING TOOL (HIT RT) WITH HAS-E THREADED ROD PER ICC ESR-3187 FOR DIAMOND CORED HOLES.
      3. HILTI HIT-RE-500-V3 SAFE SET SYSTEM WITH HILTI HOLLOW DRILL BIT (TE-CD OR TE-YD) AND VC 140 VACUUM SYSTEM WITH CONTINUOUSLY DEFORMED REBAR PER ICC ESR-3814.
      4. HILTI HIT-RE 500-V3 SAFE SET SYSTEM WITH HILTI ROUGHENING TOOL (HIT RT) WITH CONTINUOUSLY DEFORMED REBAR PER ICC ESR-3814 IN DIAMOND CORED HOLES.
C. ANCHORAGE TO SOLID GROUTED MASONRY
   a. ADHESIVE ANCHORS USE:
      1. HILTI HIT-HY 270 MASONRY ACHESIVE ANCHORING SYSTEM (ICC ESR-4143).
      2. STEEL ANCHOR ELEMENT SHALL BE HILTI HAS-E CONTINUOUSLY THREADED ROD (OR EQUAL) OR CONTINUOUSLY DEFORMED STEEL REBAR.
   b. MECHANICAL ANCHORS USE:
      1. HILTI KWIK BOLT 3 (CARBON STEEL) OR KWIK BOLT 3 (OTHERS), EXPANSION ANCHORS PER ICC ESR-1385.
D. ANCHORAGE TO HOLLOW/MULTI-WYTHE MASONRY
   a. ADHESIVE ANCHORS USE:
      1. HILTI HIT-HY 270 MASONRY ACHESIVE ANCHORING SYSTEM PER ICC ESR-4144.
      2. STEEL ANCHOR ELEMENT SHALL BE HILTI HAS-E CONTINUOUSLY THREADED ROD (OR EQUAL) OR CONTINUOUSLY DEFORMED STEEL REBAR.
      3. THE APPROPRIATE SIZE SCREEN TUBE SHALL BE USED PER ADHESIVE MANUFACTURER'S RECOMMENDATION.
E. ANCHOR CAPACITY USED IN DESIGN SHALL BE BASED ON THE TECHNICAL DATA PUBLISHED BY HILTI OR SUCH OTHER METHOD AS APPROVED BY THE STRUCTURAL ENGINEER OF RECORD. SUBSTITUTION REQUESTS FOR ALTERNATE PRODUCTS MUST BE APPROVED IN WRITING BY THE STRUCTURAL ENGINEER OF RECORD PRIOR TO USE. CONTRACTOR SHALL PROVIDE CALCULATIONS DEMONSTRATING THAT THE SUBMITTED PRODUCT IS CAPABLE OF ACHIEVING THE PERFORMANCE VALUES OF THE SPECIFIED PRODUCT. SUBSTITUTIONS WILL BE EVALUATED BY THEIRS HAVING AN ICC ESR SHOWING COMPLIANCE WITH THE RELEVANT BUILDING CODE FOR SEISMIC USES, LOAD RESISTANCE, INSTALLATION CATEGORY, AND AVAILABILITY OF COMPREHENSIVE INSTALLATION INSTRUCTIONS. ADHESIVE ANCHOR EVALUATION WILL ALSO CONSIDER CREEP, IN-SERVICE TEMPERATURE AND INSTALLATION TEMPERATURE.
F. INSTALL ANCHOR PER THE MANUFACTURER INSTRUCTION, AS INCLUDED IN THE ANCHOR PACKAGING.
G. OVERHEAD ADHESIVE ANCHORS MUST BE INSTALLED USING THE HILTI PROFIS SYSTEM.
H. THE CONTRACTOR SHALL ARRANGE FOR AN ANCHOR MANUFACTURER'S REPRESENTATIVE TO PROVIDE ON-SITE INSTALLATION TRAINING FOR ALL OF THEIR ANCHORING PRODUCTS SPECIFIED. THE STRUCTURAL ENGINEER OF RECORD MUST RECEIVE DOCUMENTED CONFIRMATION THAT ALL OF THE CONTRACTOR PERSONNEL WHO INSTALL ANCHORS ARE TRAINED PRIOR TO COMMENCEMENT OF INSTALLING ANCHORS.
I. ANCHOR CAPACITY IS DEPENDENT UPON SPACING BETWEEN ADJACENT ANCHORS AND PROXIMITY OF ANCHORS TO EDGE OF CONCRETE. INSTALL ANCHORS IN ACCORDANCE WITH SPACING AND EDGE CLEARANCES INDICATED ON THE DRAWINGS.
J. EXISTING REINFORCING BARS IN THE CONCRETE STRUCTURAL DRAWINGS MAY CONFLICT WITH SPECIFIC ANCHOR LOCATIONS. UNLESS NOTED OTHERWISE THAT THE BARS CAN BE CUT, THE CONTRACTOR SHALL REVIEW THE EXISTING STRUCTURAL DRAWINGS AND SHALL UNDERTAKE TO LOCATE THE POSITION OF THE REINFORCING BARS AT THE LOCATIONS OF THE CONCRETE ANCHORS BY HILTI FERROSCAN, GPR, X-RAYING, CHIPPING, OR OTHER APPROVED MEANS.

PRELIMINARY NOT FOR CONSTRUCTION
6/6/2023 10:04:05 AM

Parkhill

THIS DOCUMENT IS RELEASED FOR THE PURPOSE OF INTERIM REVIEW UNDER THE AUTHORITY OF J.M. WESTBROOK, P.E., LICENSE #51601. IT IS NOT TO BE USED FOR REGULATORY APPROVAL, CONSTRUCTION, BIDDING OR PERMIT PURPOSES. PARKHILL SMITH & COOPER, INC. F-560

06/27/2023

Parkhill.com

Midland West CCS

City of Midland

MIDLAND
Fuel the Energy!

CLIENT
City of Midland

300 North Loraine
Midland, Texas

PROJECT NO.
6119.21 - WEST
40012.22 - NORTH

#	DATE	DESCRIPTION
-	06/27/2023	City Council Review

General Notes

S-001

PACKET
6434
July 11, 2023

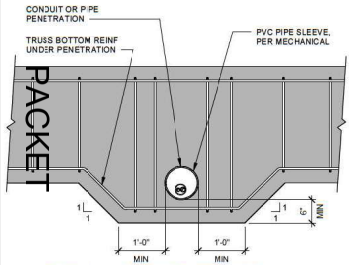

D1 TYPICAL PIPE PENETRATION
NTS

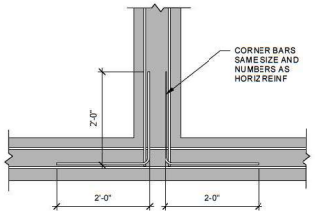

D2 TYPICAL INTERSECTION BAR
NTS

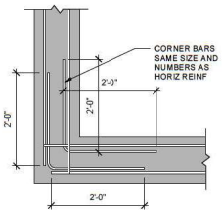

D3 TYPICAL CORNER BAR
NTS

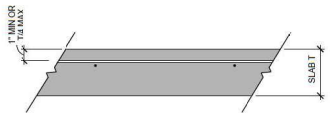

D4 TYPICAL REBAR PLACEMENT
NTS

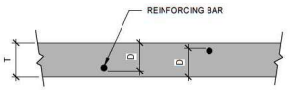

UNLESS OTHERWISE NOTED, REINFORCING SHALL BE PLACED AS SHOWN ON THE DRAWINGS WITHIN THE FOLLOWING TOLERANCE:

DEPTH, D, IN SLABS, JOISTS, BEAMS, WALLS, COLUMNS AND SIMILAR ELEMENTS WHERE D IS 24" OR LESS ---------- ±1/4"
WHERE D IS MORE THAN 24" ---------- ±1/2"
LONGITUDINAL LOCATION OF BENDS AND ENDS OF BARS ---------- ±2"
EXCEPT THAT SPECIFIED CONCRETE COVER AT ENDS OF MEMBERS SHALL NOT BE REDUCED.
FABRICATED DIMENSIONS OF TIES, STIRRUPS AND SPIRALS ----- 0'-1/4"
OFFSET DIMENSIONS IN BENT BARS ---------- 0'-1/2"
DIMENSION FROM FACE OF SUPPORT TO LOCATION OF A TIE OR STIRRUP ---------- ±1"

C1 TOLERANCES FOR PLACING AND FABRICATION OF REINF BARS
NTS

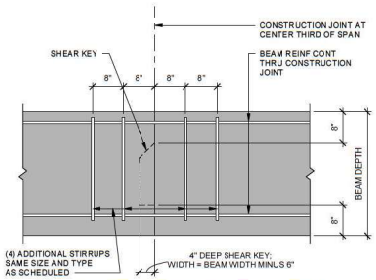

C2 CONSTRUCTION JOINT AT BEAM
NTS

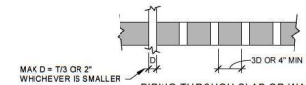

PIPING THROUGH SLAB OR WALL

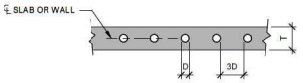

CONDUIT IN SLAB OR WALL

NOTE:
WHERE CLEAR DISTANCE BETWEEN SLEEVES IS IMPOSSIBLE, THIS AREA SHALL BE TREATED AS A SLAB OPENING PER TYPICAL DETAIL "OPENING IN SLAB ON GRADE".

C3 PIPING AND CONDUIT IN OR THROUGH SLAB OR WALL
NTS

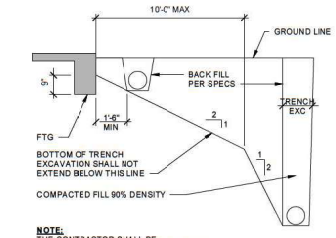

NOTE:
THE CONTRACTOR SHALL BE RESPONSIBLE FOR SHORING, SHEATHING OR OTHERWISE MAINTAINING THE SIDES OF THE EXCAVATION FROM CAVE-INS UNTIL ALL BACK FILL IS COMPLETED PER SPECIFICATIONS.

C5 EXCAVATIONS
NTS

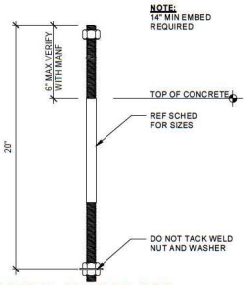

B3 TYPICAL ANCHOR ROD
NTS

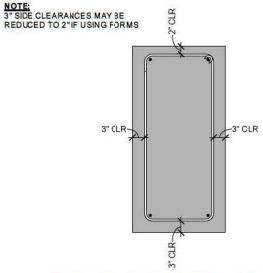

B4 TYPICAL GRADE BEAM COVER
NTS

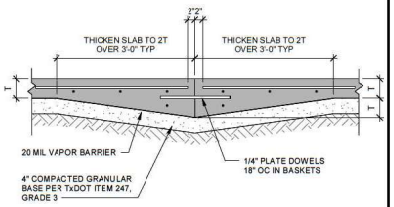

CONSTRUCTION JOINT
OR

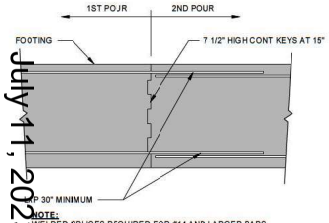

NOTE:
WELDED SPLICES REQUIRED FOR #14 AND LARGER BARS WHERE CONT FOOTING IS UNDER A WALL LOCATE CONSTRUCTION JOINT AT 1/4 OF THE CLEAR OPENING WIDTH ABOVE FROM FACE OF OPENING, OR IN MIDDLE 1/3 OF THE D STANCE BETWEEN COLUMNS.

A1 CONTINUOUS FOOTING CONSTRUCTION JOINT
NTS

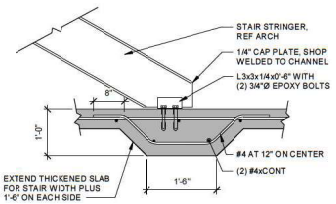

A4 STAIR STRINGER TO SLAB ON GRADE
3/4" = 1'-0"

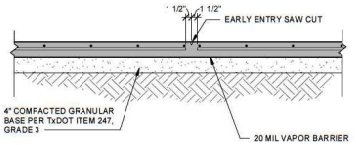

CONTRACTION JOINT
REFER TO GENERAL NOTES FOR MORE INFO

A5 TYPICAL CONSTRUCTION JOINTS
NTS

6/6/2023 10:04:06 AM

Parkhill

THIS DOCUMENT IS RELEASED FOR THE PURPOSE OF INTERIM REVIEW UNDER THE AUTHORITY OF J.M. WESTBROOK, P.E., LICENSE #51601. IT IS NOT TO BE USED FOR REGULATORY APPROVAL, CONSTRUCTION, BIDDING OR PERMIT PURPOSES. PARKHILL SMITH & COOPER, INC. F-560

06/27/2023

Parkhill.com

Midland West CCS

City of Midland

MIDLAND Fuel the Energy!

CLIENT
City of Midland

300 North Loraine
Midland, Texas

PROJECT NO.
6119.21 - WEST
40012.22 - NORTH

#	DATE	DESCRIPTION
-	06/27/2023	City Council Review

Typical Foundation Details

S-002

PACKET 07435

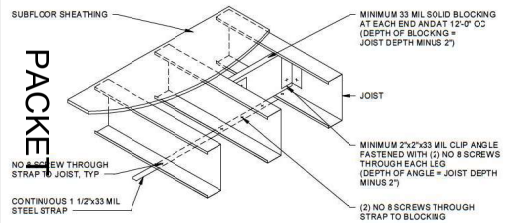

D1 JOSIT BLOCKING (SOLID)
NTS

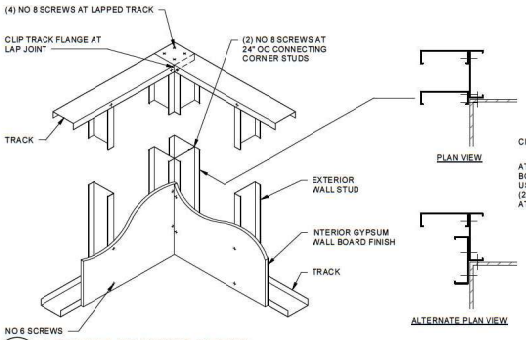

D2 CORNER FRAMING DETAIL
NTS

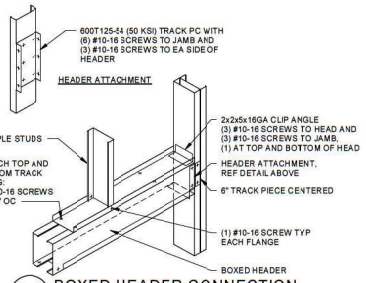

D4 BOXED HEADER CONNECTION
NTS

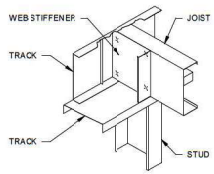

D5 JOIST WEB STIFFENER
NTS

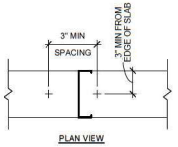

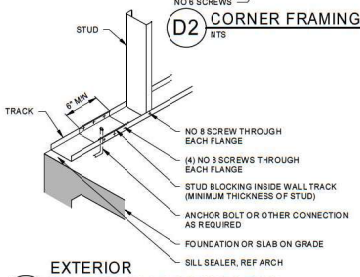

C2 EXTERIOR WALL TO SLAB CONNECTION
NTS

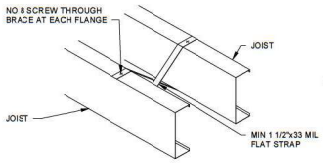

C3 JOIST BLOCKING (STRAP)
NTS

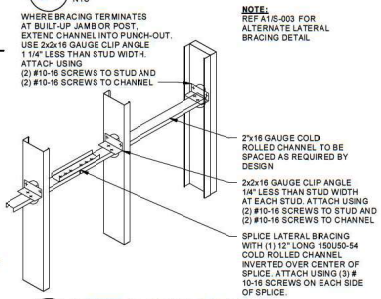

C4 LATERAL WALL BRACING
NTS

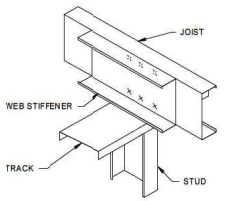

C5 JOIST WEB STIFFENER
NTS

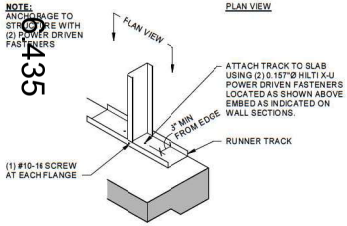

B1 STUD TO TRACK
NTS

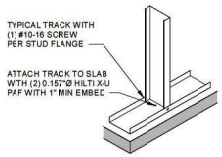

B2 WALL TRACK ANCHORAGE
NTS

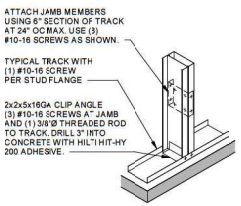

B3 JAMB ANCHORAGE
NTS

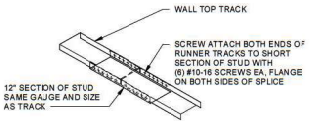

B4 TOP TRACK SPLICE
NTS

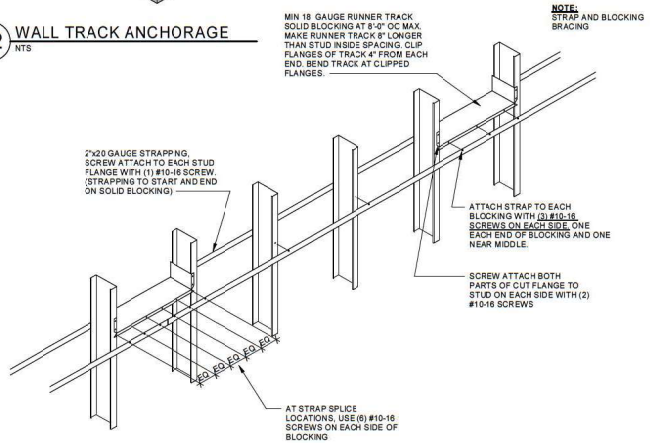

A1 ALTERNATE LATERAL BRACING
NTS

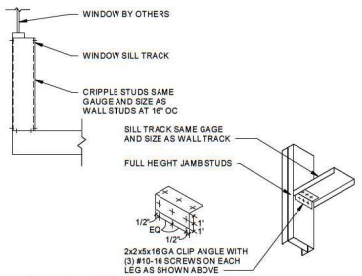

A3 SILL TRACK CONNECTION
NTS

July 11, 2023

6/5/2023 10:04:08 AM

Parkhill

THIS DOCUMENT IS RELEASED FOR THE PURPOSE OF INTERIM REVIEW UNDER THE AUTHORITY OF J.M. WESTBROOK, P.E., LICENSE #51601. IT IS NOT TO BE USED FOR REGULATORY APPROVAL, CONSTRUCTION, BIDDING OR PERMIT PURPOSES. PARKHILL SMITH & COOPER, INC. F-560

06/27/2023

Parkhill.com

Midland West CCS

City of Midland

MIDLAND Fuel the Energy!

CLIENT
City of Midland

300 North Loraine
Midland, Texas

PROJECT NO.
5119.21 - WEST
40012.22 - NORTH

#	DATE	DESCRIPTION
-	06/27/2023	City Council Review

Light Gauge Steel Details

S-003

PACKET 6.436 July 11, 2023

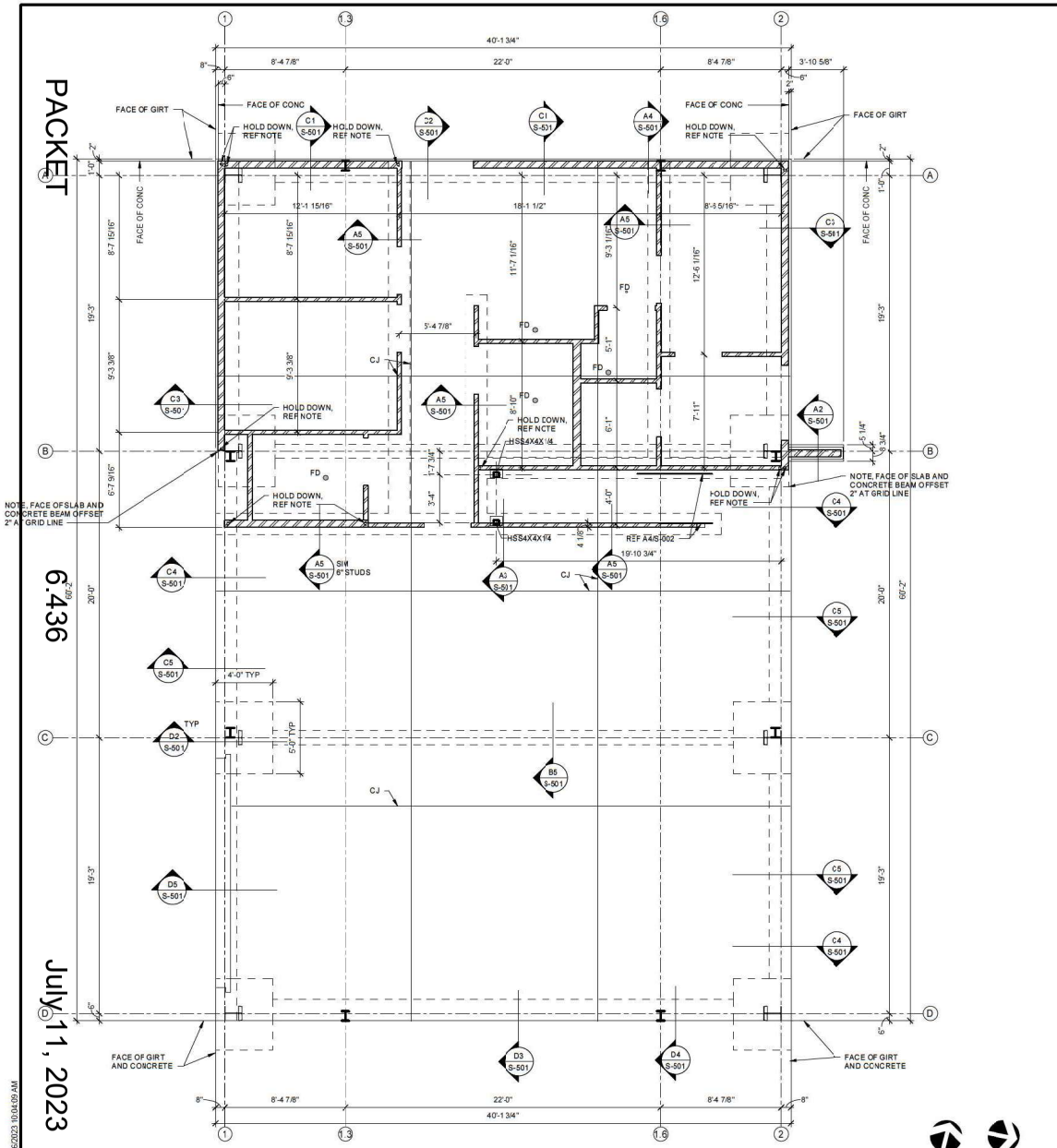

A1 FOUNDATION PLAN
1/4" = 1'-0"

GENERAL FOUNDATION NOTES

1. FLOOR SLAB ON GRADE SHALL BE 6" THICK, REINFORCED WITH #5 AT 16" ON CENTER EACH WAY, CHAIRED IN THE CENTER OF THE SLAB OVER 20 MIL VAPOR BARRIER OVER 4" COMPACTED BASE MEETING TxDOT ITEM 247, GRADE 3.
2. EXTERIOR DIMENSIONS ARE TO FACE OF GIRT AND CONCRETE.
3. INTERIOR STUD DIMENSIONS ARE TO CENTER LINE OF WALL.
4. INTERIOR STUD WALLS ARE 3 5/8" WIDE EXCEPT AS NOTED.
5. SIMPSON S/DT2Z HOLD DOWNS ARE SECURED TO STUD WITH (8) #14 SCREWS AND TO SLAB WITH HILTI KIT-HZ ROD 1/2" DIAMETER WITH 5" EMBEDMENT USING EPOXY SYSTEM INDICATED ON SHEET S-001.
6. FD = FLOOR DRAIN, REFERENCE ARCHITECTURAL AND PLUMBING DRAWINGS.
7. CJ = SLAB JOINT, EITHER CONSTRUCTION OR CONTRACTION AT CONTRACTOR'S OPTION, REFERENCE A5/S-002.

Parkhill

THIS DOCUMENT IS RELEASED FOR THE PURPOSE OF INTERIM REVIEW UNDER THE AUTHORITY OF J.M. WESTBROOK, P.E., LICENSE #51601. IT IS NOT TO BE USED FOR REGULATORY APPROVAL, CONSTRUCTION, BIDDING OR PERMIT PURPOSES. PARKHILL SMITH & COOPER, INC. F-560

06/27/2023

Parkhill.com

Midland West CCS

City of Midland

MIDLAND Fuel the Energy!

CLIENT
City of Midland

300 North Loraine
Midland, Texas

PROJECT NO.
6119.21 - WEST
40012.22 - NORTH

#	DATE	DESCRIPTION
-	06/27/2023	City Council Review

Foundation Plan

S-111

6/26/2023 10:04:09 AM

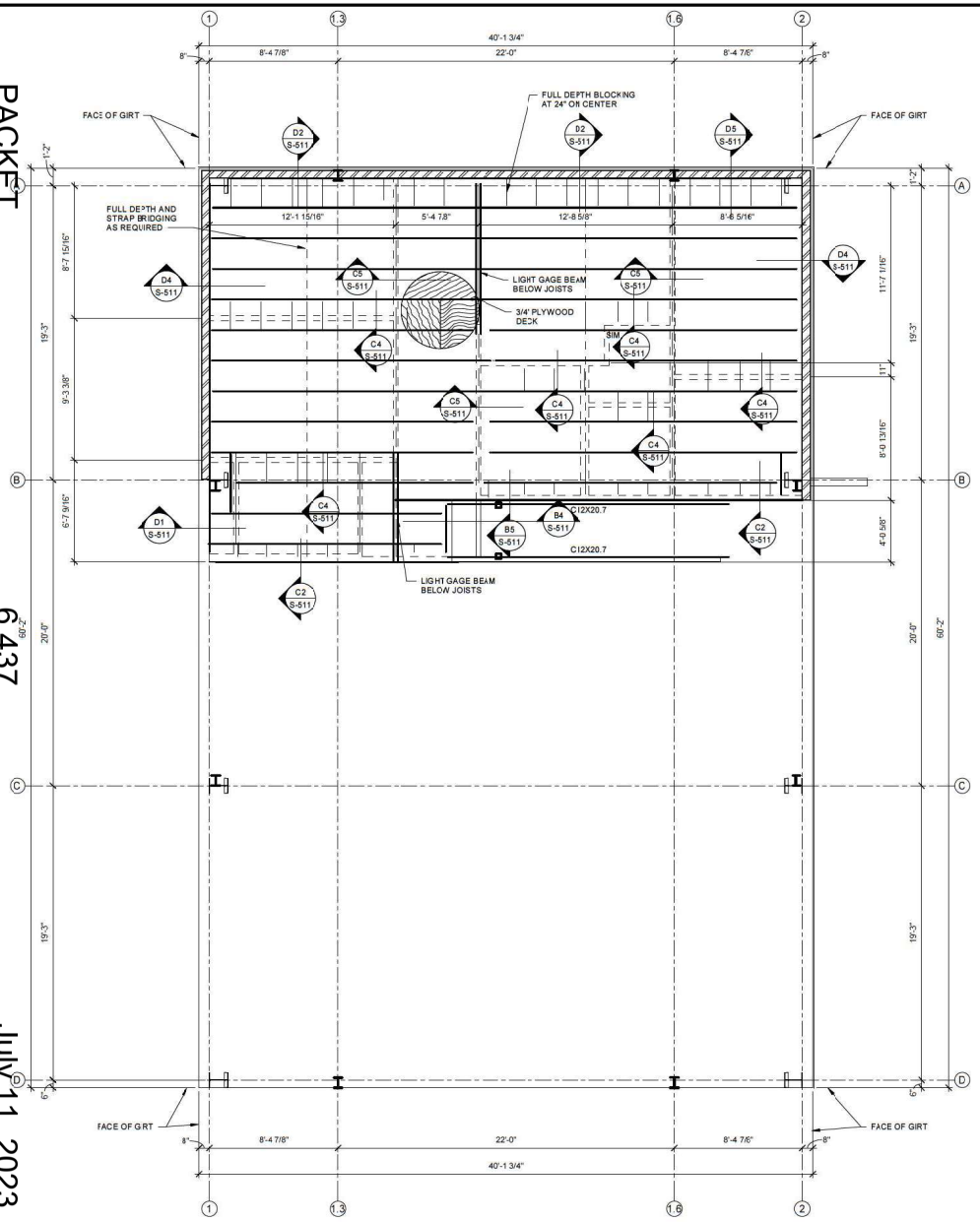

A1 MEZZANINE FRAMING PLAN
1/4" = 1'-0"

WEST SITE PLAN NORTH

NORTH SITE PLAN NORTH

GENERAL FRAMING NOTES

1. REFERENCE ARCHITECTURAL DRAWINGS FOR DIMENSIONS NOT SHOWN.
2. FLOOR DECK SHALL BE 3/4" THICK, A-C, GROUP 1 SANDED PLYWOOD PANELS WITH LONG DIRECTION PERPENDICULAR TO JOISTS. SECURED TO LIGHT GAGE JOISTS WITH #1 SELF DRILLING, SELF TAPPING FLAT HEAD SCREWS AT 6" ON CENTER AT EDGES AND 12" ON CENTER IF FIELD OF SHEET.
3. FLOOR JOISTS SHALL BE MINIMUM 1000S200-68 JOISTS AT 24"ON CENTER. PROVIDE WEB STIFFENER AT EACH END AND AT INTERMEDIATE SUPPORTS.

Parkhill

THIS DOCUMENT IS RELEASED FOR THE PURPOSE OF INTERIM REVIEW UNDER THE AUTHORITY OF J.M. WESTBROOK, P.E., LICENSE #51601. IT IS NOT TO BE USED FOR REGULATORY APPROVAL, CONSTRUCTION, BIDDING OR PERMIT PURPOSES. PARKHILL SMITH & COOPER, INC. F-560

06/27/2023

Parkhill.com

Midland West CCS

City of Midland

MIDLAND Fuel the Energy!

CLIENT
City of Midland

300 North Loraine
Midland, Texas

PROJECT NO.
6119.21 - WEST
40012.22 - NORTH

#	DATE	DESCRIPTION
-	06/27/2023	City Council Review

Mezzanine Framing Plan

S-121

6/5/2023 10:04:11 AM

PACKET

6.438

July 11, 2023

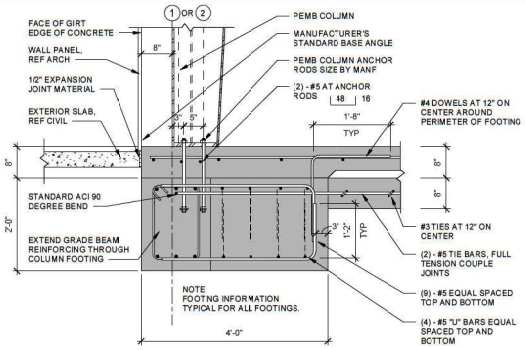

D2 SECTION
3/4" = 1'-0"

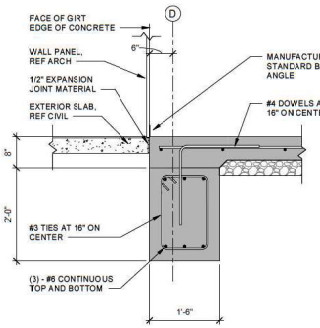

D3 SECTION
3/4" = 1'-0"

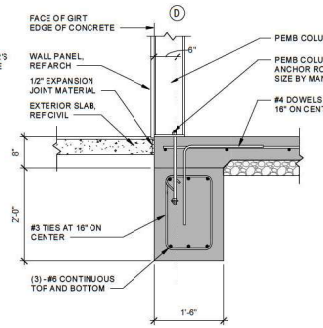

D4 SECTION
3/4" = 1'-0"

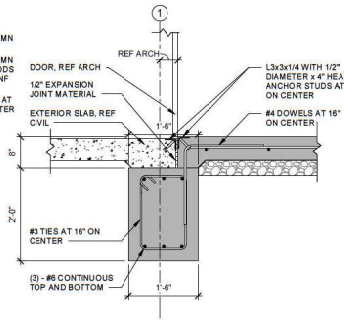

D5 SECTION
3/4" = 1'-0"

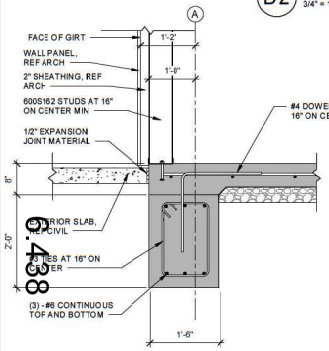

C1 SECTION
3/4" = 1'-0"

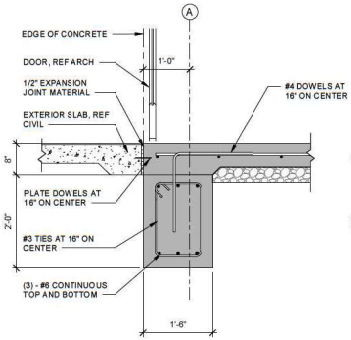

C2 SECTION
3/4" = 1'-0"

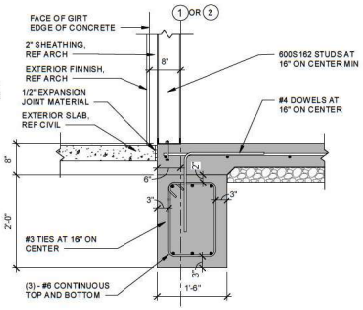

C3 SECTION
3/4" = 1'-0"

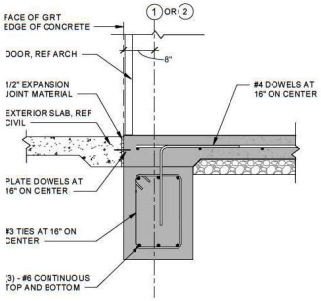

C4 SECTION
3/4" = 1'-0"

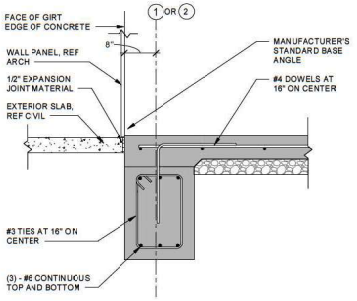

C5 SECTION
3/4" = 1'-0"

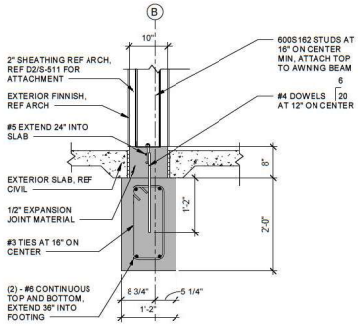

A2 SECTION
3/4" = 1'-0"

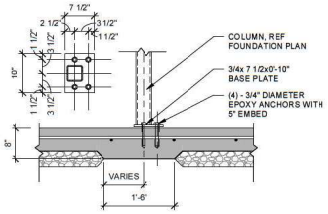

A3 SECTION
3/4" = 1'-0"

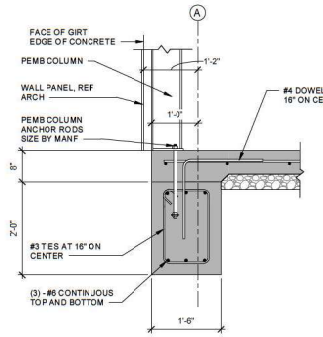

A4 SECTION
3/4" = 1'-0"

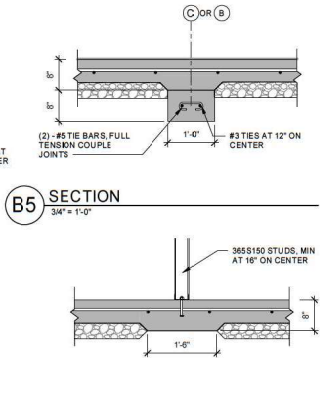

B5 SECTION
3/4" = 1'-0"

A5 SECTION
3/4" = 1'-0"

6/6/2023 10:04:13 AM

Parkhill

THIS DOCUMENT IS RELEASED FCR THE PURPOSE OF INTERIM REVIEW UNDER THE AUTHORITY OF J.M. WESTBROOK, P.E., LICENSE #51601. IT IS NOT TO BE USED FOR REGULATORY APPROVAL, CONSTRUCTION, BIDDING OR PERMIT PURPOSES. PARKHILL SMITH & COOPER, INC. F-560

06/27/2023

Parkhill.com

Midland West CCS

City of Midland

MIDLAND
Fuel the Energy!

CLIENT
City of Midland

300 North Loraine
Midland, Texas

PROJECT NO.
5119.21 - WEST
40012.22 - NORTH

#	DATE	DESCRIPTION
-	06/27/2023	City Council Review

Foundation Details

S-501

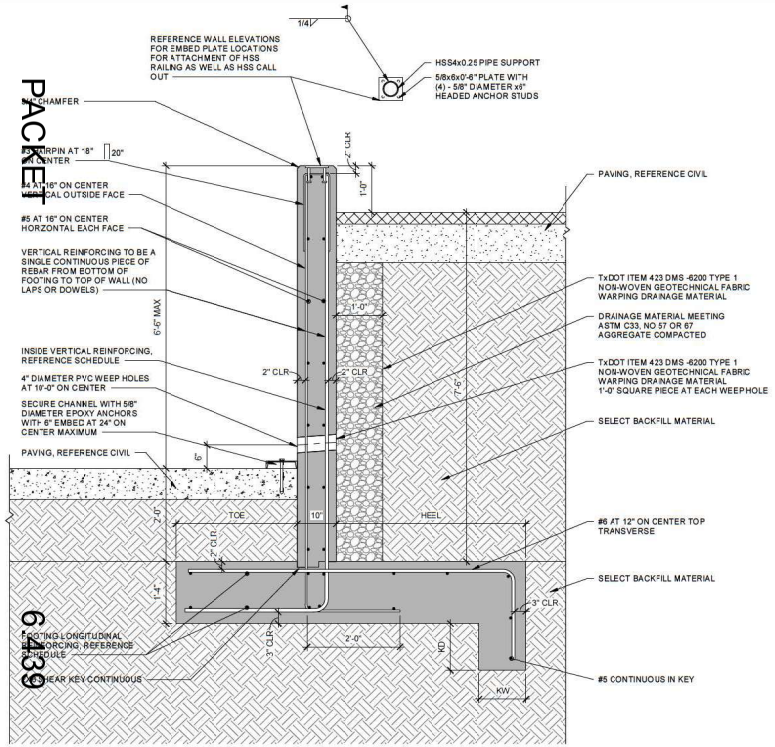

C1 RETAINING WALL
3/4" = 1'-0"

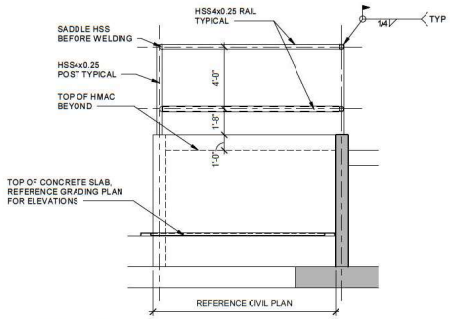

D3 ELEVATION
1/4" = 1'-0"

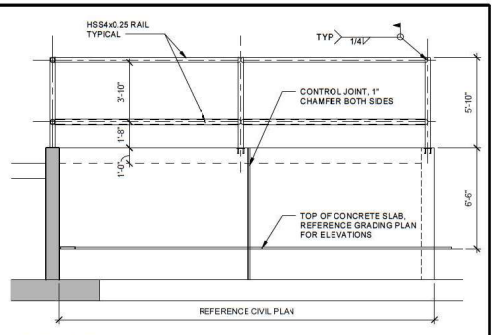

D4 ELEVATION
1/4" = 1'-0"

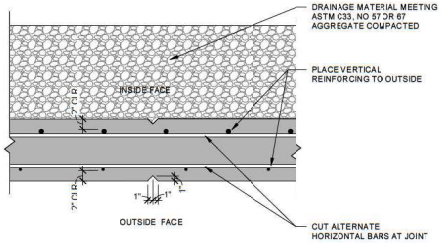

C3 RETAINING WALL VERTICAL CONTROL JOINT
1" = 1'-0"

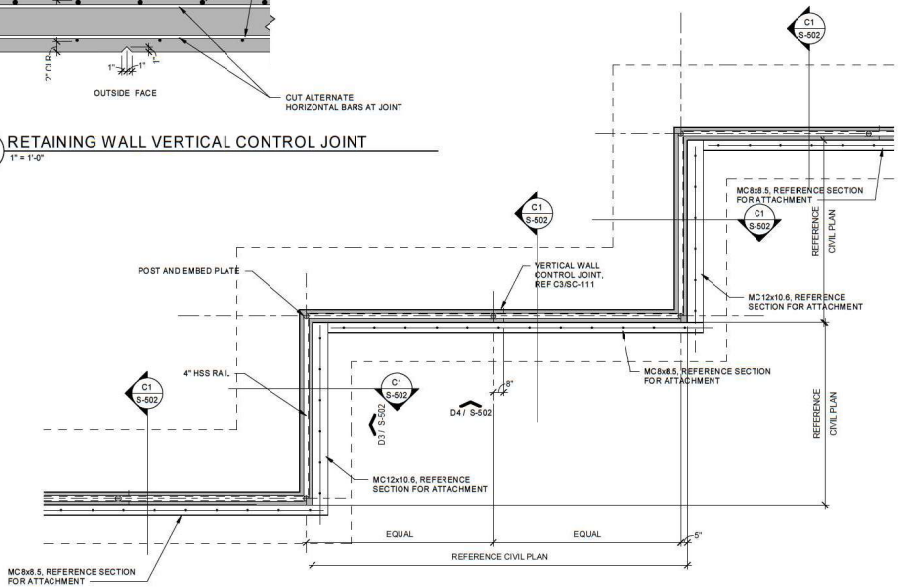

A3 CITIZEN DROP AREA
1/4" = 1'-0"

RETAINING WALL TABLE

HEIGHT	TOE	HEEL	WIDTH	KEY WIDTH	KEY DEPTH	INSIDE VERTICAL REINFORCING	KEY REINFORCING	LONGITUDINAL FOOTING REINF		BEARING PRESSURE (PSF)		SAFETY FACTOR	
								TOP	BOTTOM	TOE	HEEL	SLIDING	OVER-TURNING
	T	B	W	KW	KD								
2'-0" OR LESS	1'-6"	2'-2"	4'-6"	--	--	#5 AT 9"	--	(5) - #5	(5) - #5	1,209	88	3.99	3.19
4'-0" - 4'-0"	1'-6"	3'-2"	5'-6"	--	--	#5 AT 9"	--	(6) - #5	(5) - #5	1586	52	2.80	2.81
5'-0" - 4'-0"	2'-0"	3'-2"	6'-0"	--	--	#6 AT 9"	--	(7) - #5	(6) - #5	1,670	72	2.42	2.68
6'-0" - 0'-0"	2'-6"	5'-2"	8'-6"	1'-0"	1'-0"	#6 AT 9"	(2) - #5 CONTINUOUS	(8) - #5	(6) - #5	1,802	59	2.29	2.59

DESIGN CRITERIA
EQUIVALENT FLUID PRESSURE = 37 PCF
DESIGN BACKFILL DENSITY = 110 PCF
DESIGN CONCRETE WEIGHT = 145 PCF
HEEL SURCHARGE = 250 PSF
TOE SURCHARGE = 75 PSF
CONCRETE STRENGTH (fc) = 4,000 PSI
REINFORCING YIELD (Fy) = 60,000 PSI
FOOTING SOIL FRICTION FACTOR = 0.35

PACKET 6339

July 11 2023

6/5/2023 10:04:16 AM

Parkhill

THIS DOCUMENT IS RELEASED FOR THE PURPOSE OF INTERIM REVIEW UNDER THE AUTHORITY OF J.M. WESTBROOK, P.E., LICENSE #51601. IT IS NOT TO BE USED FOR REGULATORY APPROVAL, CONSTRUCTION, BIDDING OR PERMIT PURPOSES. PARKHILL SMITH & COOPER, INC. F-560

06/27/2023

Parkhill.com

Midland West CCS

City of Midland

MIDLAND Fuel the Energy!

CLIENT
City of Midland

300 North Loraine
Midland, Texas

PROJECT NO.
5119.21 - WEST
40012.22 - NORTH

#	DATE	DESCRIPTION
-	06/27/2023	City Council Review

Foundation Details

S-502

PACKET

6.440

July 11, 2023

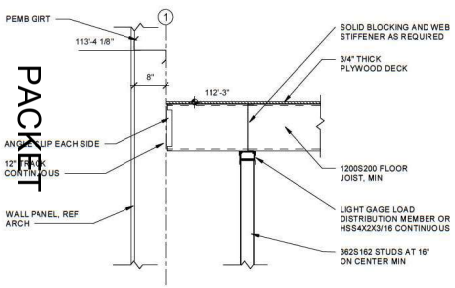

D1 SECTION
3/4" = 1'-0"

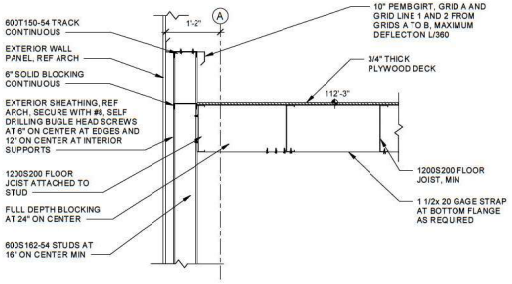

D2 SECTION
3/4" = 1'-0"

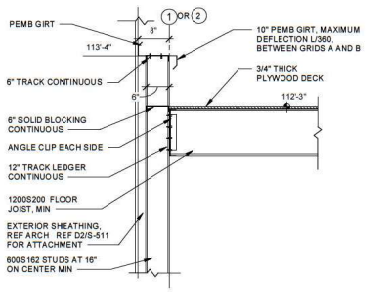

D4 SECTION
3/4"= 1'-0"

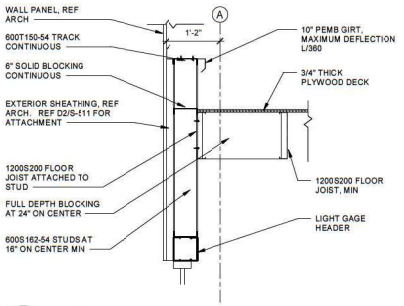

D5 SECTION
3/4" = 1'-0"

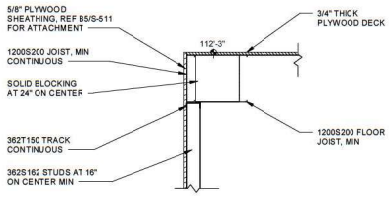

C2 SECTION
3/4" = 1'-0"

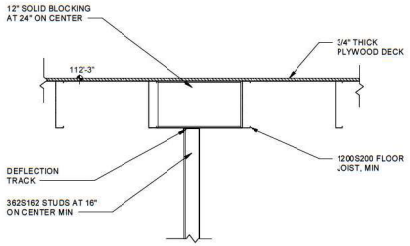

C4 SECTION
3/4" = 1'-0"

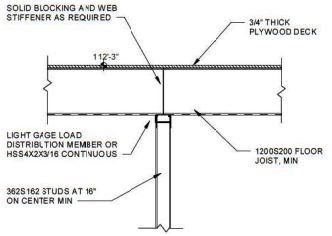

C5 SECTION
3/4" = 1'-0"

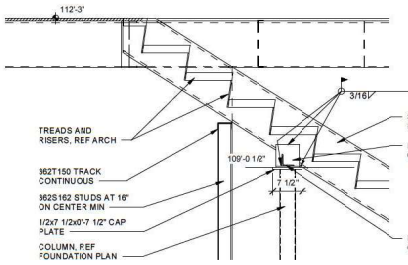

B4 SECTION
3/4" = 1'-0"

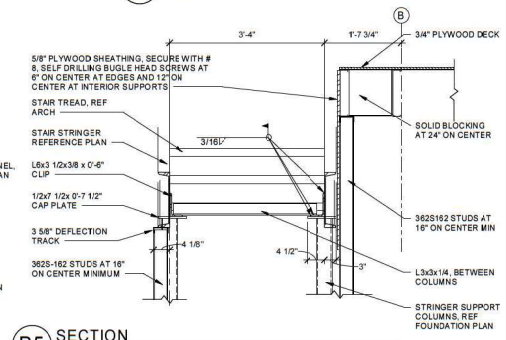

B5 SECTION
3/4" = 1'-0"

6/6/2023 10:04:17 AM

Parkhill

THIS DOCUMENT IS RELEASED FOR THE PURPOSE OF INTERIM REVIEW UNDER THE AUTHORITY OF J.M. WESTBROOK, P.E., LICENSE #51601. IT IS NOT TO BE USED FOR REGULATORY APPROVAL, CONSTRUCTION, BIDDING OR PERMIT PURPOSES. PARKHILL SMITH & COOPER, INC. F-560

06/27/2023

Parkhill.com

Midland West CCS

City of Midland

MIDLAND
Fuel the Energy!

CLIENT
City of Midland

300 North Loraine
Midland, Texas

PROJECT NO.
6119.21 - WEST
40012.22 - NORTH

#	DATE	DESCRIPTION
-	06/27/2023	City Council Review

Framing Details

S-511

INTERIOR LEGEND

AA	FINISH TAG
	FIXTURES/ FURNITLRE/ EQUIPMENT/ SIGNAGE
	NOT IN SCOPE

FLOOR PLAN LEGEND

	CONCRETE WALL
	FACE BRICK
	CMU WALL
MJ	MASONRY CONTFOL JOINT
	EXISTING CONSTRUCTION TO REMAIN
	EXISTING CONSTRUCTION TO BE REMOVED
	NEW STUD WALL
	NEW PARTIAL HEIGHT WALL
	GLAZING SYSTEM
	WIRE MESH OR FABRIC PARTITION
CG1	CORNER GUARD
CG1	END WALL GUARD
WG1	WALL GUARD
HR1	HANDRAIL
FEC	FIRE EXTINGUISHER AND CABINET
FEB	FIRE EXTINGUISHER AND BRACKET
	FURNITURE/EQUIPMENT NIC
DS	DOWN SPOUT
FD	FLOORDRAIN
000	DOOR NUMBER
00	WINDOW MARK
LV00	LOUVER MARK
HM00	HOLLOW METAL FRAME MARK
AL00	ALUMINUM FRAME MARK
B2b	PARTITION TYPE
AA	FINISH TAG

RCP LEGEND

	CEILING TRACK
CJ	CONTROL JOINT
	ACCESS PANEL
	SKYLIGHT
	GYP BD CEILING
	SUSPENDED METAL LATH AND PLASTER CEILING
	SUSPENDED ACOUSTICAL CEILING SYSTEM: TYPE A
	SUSPENDED ACOUSTICAL CEILING SYSTEM: TYPE B

ROOF LEGEND

RD	ROOF DRAIN
OD	OVERFLOW DRAIN
	SLOPE
	ROOF MOUNTED EQUIPMENT
	VENT THROUGH ROOF (VTR)
	SKYLIGHT
	ROOF HATCH

DETAIL LEGEND

	COMPACTED SOIL
	UNDISTURBED SOIL
	STONE/MARBLE
	PLASTER OR STUCCO ON METAL LATH
	STEEL
	CONCRETE IN SECTION
	BRICK
	CMU
	BATT INSULATION
	ACOUSTICAL TILE
	RIGID INSULATION
	WOOD CONTINUOUS
	WOOD DISCONTINUOUS
	PLASTER, SAND OR CEMENT GROUT
	POUROUS FILL, GRAVEL (CAPILLARY WATER BARRIER PAVEMENT BASE)
	TERAZZO (IN SECTION)

PACKET

6.441

July 11, 2023

6/27/2023 8:54:49 AM

Parkhill

THIS DOCUMENT IS RELEASED ON 06-27-2023 FOR THE PURPOSE OF INTERIM REVIEW UNDER THE ALTHORITY OF JESSE N. BERNARD, R.A., TEXAS LICENSE #29194. IT IS NOT TO BE USED FOR REGULATORY APPROVAL, CONSTRUCTION, BIDDING OR PERMIT PURPOSES. PARKHILL, SMITH & COOPER, INC.

Parkhill.com

Citizen Collection Stations

City of Midland

MIDLAND
Fuel the Energy!

CLIENT
City of Midland

300 North Loraine
Midland, TX

PROJECT NO.
6119.21 - WEST
40015.22 - NORTH

#	DATE	DESCRIPTION
-	06/27/2023	City Council Review

Architectural / Interior Legends

A-001

INTERIOR PARTITION SCHEDULE

	(PLAN)	PARTITION TYPE	1	2	3	4	5	6	7	8	ABOVE CEILING CONDITION (SECTION)
PACKET 2	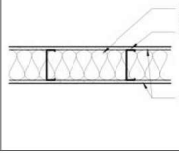	ASSEMBLY THICKNESS	3 3/4"	3 3/4"	4 7/8"	4 7/8"	7 1/4"	7 1/4"	9 1/4"	9 1/4"	b 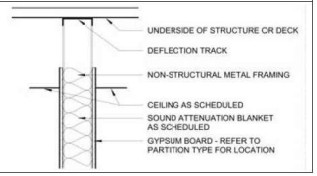
		NON-STRUCTURAL METAL FRAMING	2 1/2"	2 1/2"	3 5/8"	3 5/8"	6"	6"	8"	8"	
		SOUND-ATTENUATION BLANKETS		REQ.		REQ.		REQ.	REQ.	REQ.	
		UL DESIGN ASSEMBLY	U465	U465	U465	U455	U465	U465	U465	U465	
		FIRE RATING (IF REQUIRED BY CODE SHEET)	1 HOUR	1 HOUR	1 HOUR	1 HOUR	1 HOUR	1 HOUR	1 HOUR	1 HOUR	
		STC RATING	35	48	40	46		51			
B	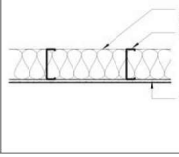	ASSEMBLY THICKNESS	3 1/8"	3 1/8"	4 1/4"	4 1/4"	6 5/8"	6 5/8"	8 5/8"	8 5/8"	
		NON-STRUCTURAL METAL FRAMING	2 1/2"	2 1/2"	3 5/8"	3 5/8"	6"	6"	8"	8"	
		SOUND-ATTENUATION BLANKETS		REQ.		REQ.		REQ.	REQ.	REQ.	
		UL DESIGN ASSEMBLY									
		FIRE RATING (IF REQUIRED BY CODE SHEET)	NR	NR	NR	NR	NR	NR	NR	NR	
		STC RATING				34		37			

PARTITION GENERAL NOTES

THE FOLLOWING PARTITION GRAPHIC SYMBOL AND THREE PART NOTATION SYSTEM IS USED IN THE CONSTRUCTION DOCUMENTS FOR THIS PROJECT. NOTE: THE PARTITION CONSTRUCTION WILL MAINTAIN ITS DESIGNATION TO THE POINT OF AN INTERSECTING PARTITION. IF NO CHANGE IN DESIGNATION IS SHOWN BEYOND THE INTERSECTION, THE PREVIOUS PARTITION CONSTRUCTION DESIGNATION APPLIES. REFER TO CODE PLAN G-101 FOR RATED WALLS

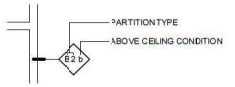

- WHERE SOUND-ATTENUATION BLANKETS ARE SCHEDULED :
  1. INSTALL ACOUSTICAL SEALANT AT ALL PENETRATIONS PER MANUFACTURER'S INSTRUCTIONS AT TOP AND BOTTOM OF WALLS (BOTH SIDES).
  2. PUTTY PADS AT ALL WALL PENETRATIONS INCLUDING ELECTRIC OUTLETS, IT BACK BOXES.
- ALL ASSEMBLY THICKNESSES LISTED IN THE PARTITION TYPES ARE BASED ON 5/8" THICK GYPSUM BOARD. ALTERNATE GYPSUM BOARD THICKNESSES WILL HAVE A DIFFERENT ASSEMBLY THICKNESS.
- WHERE RATED ASSEMBLY EXTENDS TO STRUCTURE ABOVE PROVIDE UL APPROVED FIRE RATED HEAD OF WALL ASSEMBLY TO MATCH RATING OF WALL. WALL HEIGHTS EXCEEDING STUD MANUFACTURER'S MAXIMUM (LIMITING) SPAN USING 5PSF LATERAL LOADING SHALL BE BRACED TO STRUCTURE ABOVE. (LAY-IN CEILINGS ARE NOT ACCEPTABLE BRACING, HARD CEILINGS ARE ACCEPTABLE).
- "STRUCTURE ABOVE" (AS NOTED IN THE PARTITION CONDITIONS) IS DEFINED AS THE UNDERSIDE OF ONE OR MORE OF THE FOLLOWING:
  - COMPOSITE FLOOR SLAB
  - STAIR TREADS/RISERS
  - METAL ROOF DECK
  - STEEL BEAMS
- IN NO CASE SHALL THE BOTTOM OF STEEL JOISTS BE CONSIDERED BOTTOM OF STRUCTURE ABOVE
- NR = NOT RATED

PARTITION TERMINATION AT DECK

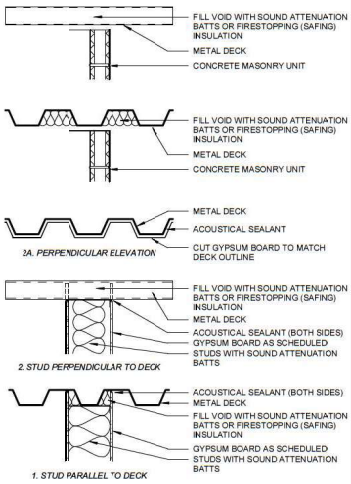

6.442

July 11, 2023

6/27/2023 8:54:47 AM

Parkhill

THIS DOCUMENT IS RELEASED ON 06-27-2023 FOR THE PURPOSE OF INTERIM REVIEW UNDER THE AUTHORITY OF JESSE N. BERNARD, R.A., TEXAS LICENSE #29194. IT IS NOT TO BE USED FOR REGULATORY APPROVAL, CONSTRUCTION, BIDDING OR PERMIT PURPOSES. PARKHILL, SMITH & COOPER, INC.

Parkhill.com

Citizen Collection Stations

City of Midland

MIDLAND Fuel the Energy!

CLIENT
City of Midland

300 North Loraine
Midland, TX

PROJECT NO.
6119.21 - WEST
40015.22 - NORTH

#	DATE	DESCRIPTION
-	06/27/2023	City Council Review

Interior Partition Schedule

A-002

PACKET

6.443

July 11, 2023

INTERIOR MATERIAL LEGEND

	MARK	DESCRIPTON	MANUFACTURER	STYLE/COLLECTION	COLOR	REMARKS
09 51 23 - ACOUSTIC TILE CEILINGS						
	ACT1	ACOUSTIC CEILING TILE (FIELD) SIZE	REFERENCE SPECIFICATION 24" X 48"	REFERENCE SPECIFICATION	WHITE	OFFICE CEILING
09 65 13 - RESILIENT BASE AND ACCESSORIES						
	RB1	RESILIENT BASE 4" COVE	ROPPE		ROPPE 123 CHARCOAL	TYP A.L GYP BOARD LOCATIONS
09 77 23 - FIBERGLASS REINFORCED WALL PANELS						
	FRP1	FIBER REINFORCED PLASTIC PANELS	MARLITE	STANDARD FRP - PEBBLED	MARLITE MEDIUM GREY	TYP JAN CLOSET LOCATIONS
	FRP2	FIBER REINFORCED PLASTIC PANELS	MARLITE	RECTANGLE HORIZONTAL - 6" X 3" TILE CONFIGURATION	BLACK WITH WHITE GROUT LINES SS105-R83 (VERTICAL)	TYP RESTROOM LOCATIONS AND BREAK ROOM BACKSPLASH
09 91 23 - INTERIOR PAINTING						
	PT1	PAINT	SHERWIN WILLIAMS		SW 7009 PEARLY WHITE	TYP A.L GYP BOARD LOCATIONS
	SCN1	SEALED CONCRETE	SHERWIN WILLIAMS	REFERENCE SPECIFICATION	CLEAR	TYP A.L CONCRETE FLOOR SURFACES
09 93 00 - STAINING AND TRANSPARENT FINISHING						
	TPF1	TRANSPARENT FINISH	SHERWIN WILLIAMS	REFERENCE SPECIFICATION	CLEAR COAT	TYP A.L PLYWOOD LOCATIONS
10 26 00 - WALL AND DOOR PROTECTION						
	CG1	CORNER GUARD	CS ACROVYN	REFERENCE SPECIFICATION	ACROVYN #934 PEARL	
12 32 16 - PLASTIC LAMINATE CASEWORK						
	PLAM1	PLASTIC LAMINATE CASEWORK	WILSONART		FAIRCHILD 8238	
	SS1	SOLID SURFACE COUNTERTOPS	CORIAN DESIGN		CORIAN DEEP NOCTURNE	

GENERAL FINISH NOTES

FLOORS:
A. GROUND LEVEL FLOORS SHALL RECEIVE (SCN1) UNO.
B. STORAGE MEZZANINE SHALL RECEIVE (TPF1) UNO.

BASE:
A. BASE SHALL BE (RB1) UNO.

WALLS:
A. DRYWALL WALLS SHALL BE PAINTED (PT1) UNO.
B. RESTROOM WALLS SHALL RECEIVE (FRP2) FROM FLOOR TO CEILING.
C. JANITOR CLOSETS SHALL RECEIVE (FRP1) FROM FLOOR TO 4'-0" AFF ON ALL WET WALLS. WALLS SHALL BE PAINTED (PT1) ABOVE.
D. LOADING BAY WALLS TO RECEIVE PLYWOOD TO 12' - 0" AFF, PLYWOOD TO RECEIVE (TPF1) UNO.
E. MEZZANINE WALLS TO RECEIVE PLYWOOD TO 4' - 0" AFF, PLYWOOD TO RECEIVE (TPF1) UNO.

CEILINGS:
A. ACOUSTICAL CEILING SHALL BE (ACT1) UNO.
B. DRYWALL CEILINGS SHALL BE PAINTED (PT1) UNO.

MILLWORK:
A. UPPER AND LOWER MILLWORK SHALL BE (PLAM1) UNO.
B. COUNTERTOPS SHALL BE (PLAM1) UNO.

MISCELLANEOUS:
A. DOOR AND WINDOW TRIM SHALL BE (PT#).
B. HANDRAILS SHALL BE (PT2).
C. PAINTED DOORS SHALL BE (PT#) UNO.

GENERAL NOTES

A. REFER TO ACCESSIBILITY STANDARDS SHEETS FOR TYPICAL MOUNTING HEIGHTS/LOCATIONS FOR TOILET ROOM ACCESSORIES.
B. ALL INTERIOR WALLS ARE A6a UNLESS NOTED OTHERWISE. REFER TO SHEET A-002 FOR INTERIOR PARTITION SCHEDULE.
C. DIMENSIONS ARE TO FACE OF STUD, CMU, OR CENTERLINE OF STRUCTURE UNO.
D. COORDINATE WITH MEP DRAWINGS FOR LOCATIONS OF FIXTURES. LOCATE AS SHOWN ON ARCHITECTURAL PLANS AND DETAILS. NOTIFY ARCHITECT OF CONFLICTS PRIOR TO CONSTRUCTION.
E. CENTER DEVICES IN CEILING TILES UNO.
F. REFER TO INTERIOR ELEVATIONS AND ROOM FINISH SCHEDULE FOR ADDITIONAL INFORMATION CONCERNING HEIGHTS, CEILING MATERIALS AND FURRED CEILINGS.
G. AT LOCATIONS OF PERFORATED RETURN AIR GRILLES, WIRING, CABLING, ETC. TO BE HELD CLEAR OF OPEN LINE OF SIGHT THROUGH GRILLE. IN CASES WHERE THIS IS UNAVOIDABLE, ITEMS VISIBLE ABOVE GRILLE ARE TO BE PAINTED FLAT BLACK.

KEY NOTES

AS INDICATED BY: (#)

104 REMOVABLE GUARD RAIL SECTION
105 METAL PAN CONCRETE FILLED STAIRS
108 MECH LOUVER, REF MECH
427 OH COILING DR, AS SCHED
485 GUARD RAIL
831 MECH EQUIP, REF MECH

PARTITION GENERAL NOTES

THE FOLLOWING PARTITION GRAPHIC SYMBOL AND THREE PART NOTATION SYSTEM IS USED IN THE CONSTRUCTION DOCUMENTS FOR THIS PROJECT.
NOTE: THE PARTITION CONSTRUCTION WILL MAINTAIN ITS DESIGNATION TO THE POINT OF AN INTERSECTING PARTITION. IF NO CHANGE IN DESIGNATION IS SHOWN BEYOND THE INTERSECTION, THE PREVIOUS PARTITION CONSTRUCTION DESIGNATION APPLIES. REFER TO CODE PLAN G-101 FOR RATED WALLS.

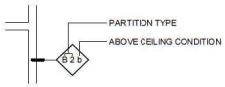

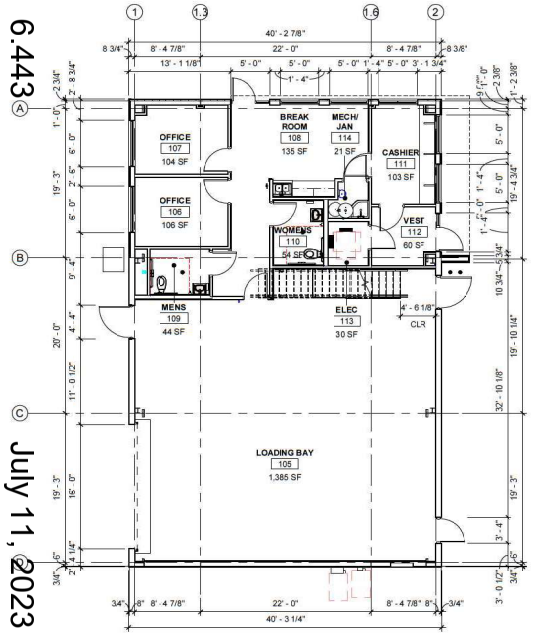

A1 DIMENSIONED PLAN - 1ST FLOOR
1/8"= 1'-0"

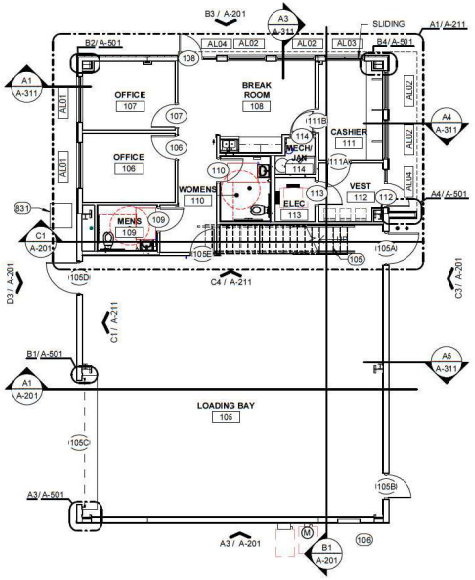

A2 ANNOTATED PLAN - 1ST FLOOR
1/8" = 1'-0"

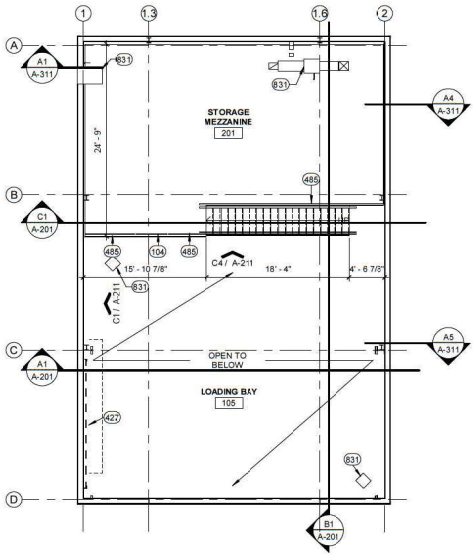

A4 ANNOTATED/DIMENSIONED PLAN - MEZZANINE
1/8" = 1'-0"

WEST SITE PLAN NORTH
NORTH SITE PLAN NORTH
0 4' 8' 16'

Parkhill

THIS DOCUMENT IS RELEASED ON 06-27-2023 FOR THE PURPOSE OF INTERIM REVIEW UNDER THE AUTHORITY OF JESSE N. BERNARD, R.A., TEXAS LICENSE #29194. IT IS NOT TO BE USED FOR REGULATORY APPROVAL, CONSTRUCTION, BIDDING OR PERMIT PURPOSES. PARKHILL, SMITH & COOPER, INC.

Parkhill.com

Citizen Collection Stations

City of Midland

MIDLAND Full the Energy!

CLIENT
City of Midland

300 North Loraine
Midland, TX

PROJECT NO.
6119.21 - WEST
40015.22 - NORTH

#	DATE	DESCRIPTION
-	06/27/2023	City Council Review

Annotated & Dimensioned Plans

A-111

6/27/2023 8:54:48 AM

PACKET 6.444 July 11, 2023

GENERAL NOTES

A. DIMENSIONS ARE TO FACE OF STUD, CMU, OR CENTERLINE OF STRUCTURE UNO.
B. COORDINATE WITH MEP DRAWINGS FOR LOCATIONS OF FIXTURES. LOCATE AS SHOWN ON ARCHITECTURAL PLANS AND DETAILS. NOTIFY ARCHITECT OF CONFLICTS PRIOR TO CONSTRUCTION.
C. FINAL SPRINKLER HEAD LOCATIONS SHALL BE SET BY FIRE PROTECTION ENGINEER AND APPROVED BY ARCHITECT.
D. CENTER DEVICES, SPRINKLER HEADS, ETC. IN CEILING TILES UNO.
E. CEILING HEIGHTS SHALL BE 9' - 0" ABOVE FINISHED FLOOR UNO.
F. REFER TO INTERIOR ELEVATIONS AND ROOM FINISH SCHEDULE FOR ADDITIONAL INFORMATION CONCERNING HEIGHTS, CEILING MATERIALS AND FURRED CEILINGS.
G. AT LOCATIONS OF PERFORATED RETURN AIR GRILLES, WIRING, CABLING, ETC. TO BE HELD CLEAR OF OPEN LINE OF SIGHT THROUGH GRILLE. IN CASES WHERE THIS IS UNAVOIDABLE, ITEMS VISIBLE ABOVE GRILLE ARE TO BE PAINTED FLAT BLACK.

KEY NOTES

AS INDICATED BY: (#)

107	METAL ROOF RIDGE TRIM
110	PREFIN MTL RAKE TRIM
111	PREFIN MTL SOFFIT PANEL
115	CONCEALED GUTTER
449	MTL GUTTER
450	MTL ROOFING
831	MECH EQUIP, REF MECH
861	LIGHT FIXTURE, REF ELECT

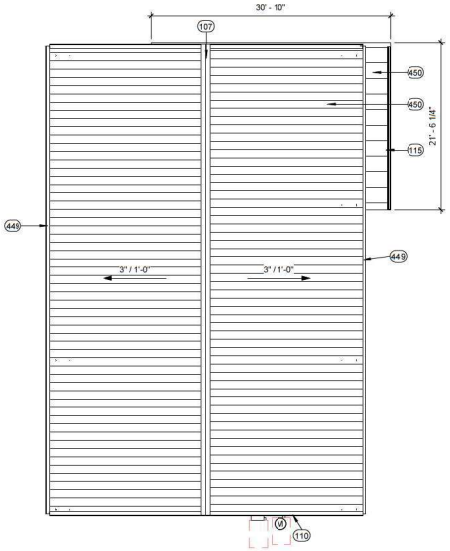

A1 ROOF PLAN
1/8" = 1'-0"

0 4' 8' 16'

WEST SITE PLAN NORTH

NORTH SITE PLAN NORTH

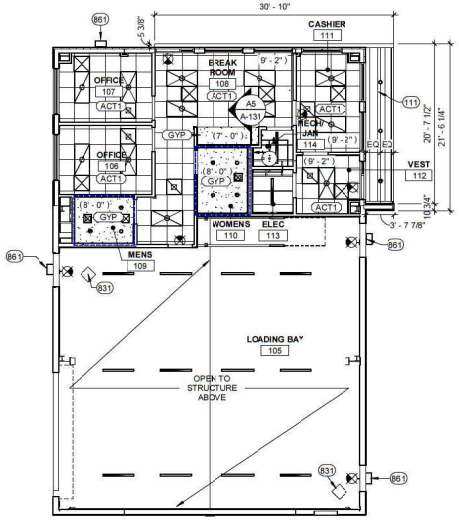

A3 REFLECTED CEILING PLAN
1/8" = 1'-0"

0 4' 8' 16'

WEST SITE PLAN NORTH

NORTH SITE PLAN NORTH

LEGEND

GYPSUM WALL BOARD CEILING

LAY-IN CEILING

MTL SOFFIT

DENOTES SOUND INSULATION

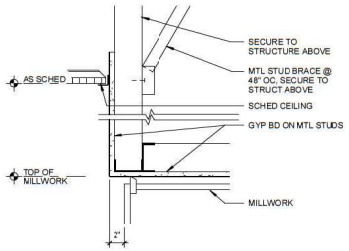

A5 CEILING DETAIL
1 1/2" = 1'-0"

Parkhill

THIS DOCUMENT IS RELEASED ON 06-27-2023 FOR THE PURPOSE OF INTERIM REVIEW UNDER THE AUTHORITY OF JESSE N. BERNARD, R.A., TEXAS LICENSE #29194. IT IS NOT TO BE USED FOR REGULATORY APPROVAL, CONSTRUCTION, BIDDING OR PERMIT PURPOSES. PARKHILL, SMITH & COOPER, INC.

Parkhill.com

Citizen Collection Stations

City of Midland

MIDLAND Fuel the Energy!

CLIENT
City of Midland

300 North Loraine
Midland, TX

PROJECT NO.
6119.21 - WEST
40015.22 - NORTH

#	DATE	DESCRIPTION
-	06/27/2023	City Council Review

Reflected Ceiling Plan & Roof Plan

A-131

6/27/2023 8:54:51 AM

PACKET

8.445

July 11, 2023

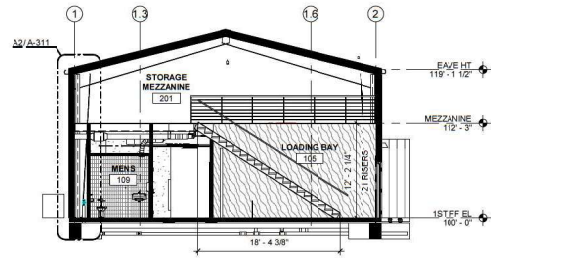

C1 BUILDING SECTION
1/8" = 1'-0"

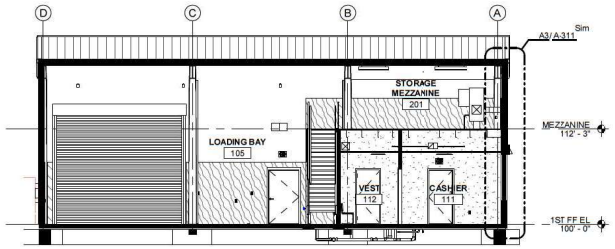

B1 BUILDING SECTION
1/8" = 1'-0"

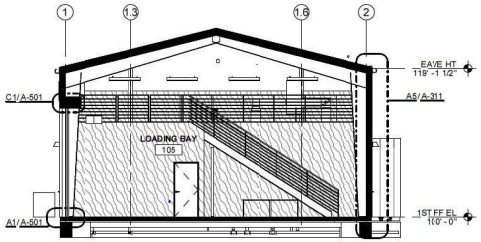

A1 BUILDING SECTION
1/8" = 1'-0"

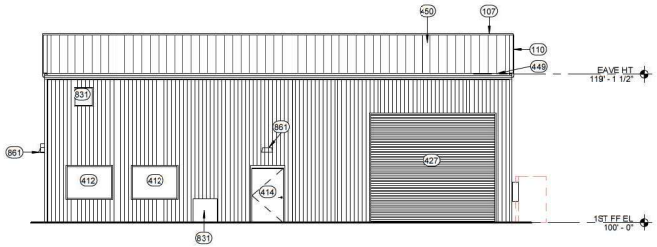

D3 WEST ELEVATION
1/8" = 1'-0"

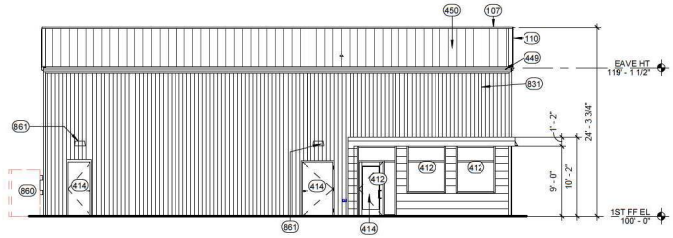

C3 EAST ELEVATION
1/8" = 1'-0"

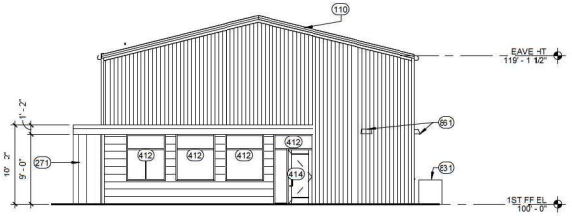

B3 NORTH ELEVATION
1/8" = 1'-0"

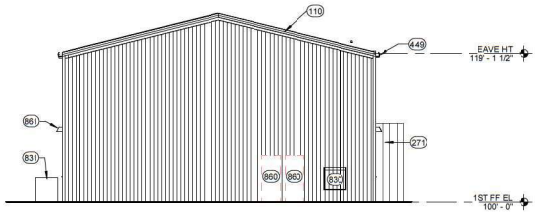

A3 SOUTH ELEVATION
1/8" = 1'-0"

GENERAL NOTES

A PAINT ALL GYPBOARD WALLS IN FIELD, REF PROJECT MANUAL.
B FINISH ALL EXPOSED PLYWOOD IN FIELD, REF PROJECT MANUAL.
C. VERIFY DIMENSIONS.

KEY NOTES

AS INDICATED BY: (#)

197	METAL ROOF RIDGE TRIM
1'0	PREFIN MTL RAKE TRIM
271	MTL PANEL SYSTEM TYPE B
4'2	ALUM STORE FRONT & GLAZING, AS SCHED
4'4	DOOR, AS SCHED
427	OH COILING DR, AS SCHED
449	MTL GUTTER
450	MTL ROOFING
830	REF MECH
831	MECH EQUIP, REF MECH
860	REF ELECT
861	LIGHT FIXTURE, REF ELECT

Parkhill

THIS DOCUMENT IS RELEASED ON 06-27-2023 FOR THE PURPOSE OF INTERIM REVIEW UNDER THE AUTHORITY OF JESSE N. BERNARD, R.A., TEXAS LICENSE #29194. IT IS NOT TO BE USED FOR REGULATORY APPROVAL, CONSTRUCTION, BIDDING OR PERMIT PURPOSES. PARKHILL, SMITH & COOPER, INC.

Parkhill.com

Citizen Collection Stations

City of Midland

MIDLAND
Fuel the Energy!

CLIENT
City of Midland

300 North Loraine
Midland, TX

PROJECT NO.
6119.21 - WEST
40015.22 - NORTH

#	DATE	DESCRIPTION
-	06/27/2023	City Council Review

Exterior Elevations & Building Sections

A-201

6/27/2023 8:55:00 AM

PACKET

6.446

July 11, 2023

6/27/2023 8:55:02 AM

KEY NOTES

AS INDICATED BY: (#)

101	UNDERCOUNTER REFRIGERATOR; OFCI
109	UNDERCOUNTER ICE MAKER; OFCI
112	ALUMINUM SUPPORT BRACKET
113	COUNTERTOP
114	CONTROL JOINT
124	OPEN SHELF
132	CANE DETECTION
552	FEB
600	GRAB BAR (GB)
602	COMBINATION PAPER TOWEL DISPENSER/WASTE RECEPTACLE (PTDWR)
603	PAPER TOWEL DISPENSER (PTD)
607	TLT TISSUE DISPENSER (TTD-1)
612	MIRROR (M1)
666	CORNER GUARD

GENERAL NOTES

A PAINT ALL GYP BOARD WALLS IN FIELD, REF PROJECT MANUAL.
B FINISH ALL EXPOSED PLYWOOD IN FIELD, REF PROJECT MANUAL.
C VERIFY DIMENSIONS.

PARTITION GENERAL NOTES

THE FOLLOWING PARTITION GRAPHIC SYMBOL AND THREE PART NOTATION SYSTEM IS USED IN THE CONSTRUCTION DOCUMENTS FOR THIS PROJECT. NOTE: THE PARTITION CONSTRUCTION WILL MAINTAIN ITS DESIGNATION TO THE POINT OF AN INTERSECTING PARTITION. IF NO CHANGE IN DESIGNATION IS SHOWN BEYOND THE INTERSECTION, THE PREVIOUS PARTITION CONSTRUCTION DESIGNATION APPLIES. REFER TO CODE PLAN G-101 FOR RATED WALLS.

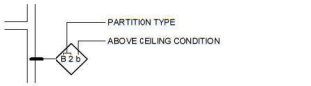

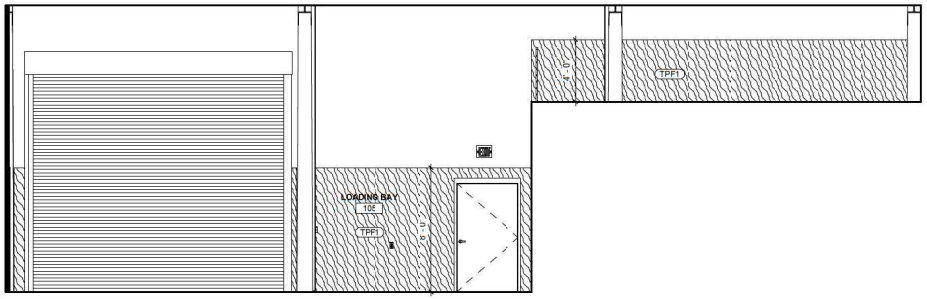

C1 INTERIOR ELEVATION
1/4" = 1'-0"

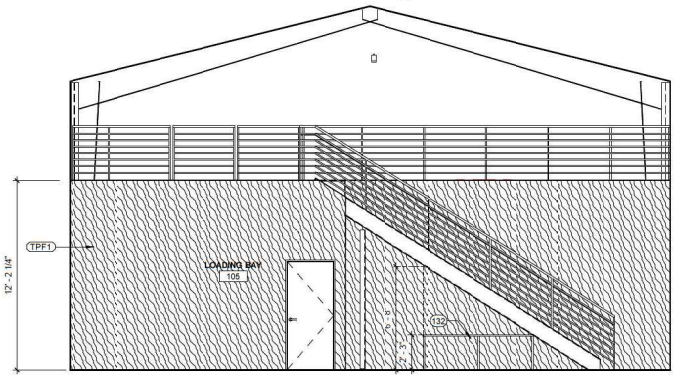

C4 INTERIOR ELEVATION
1/4" = 1'-0"

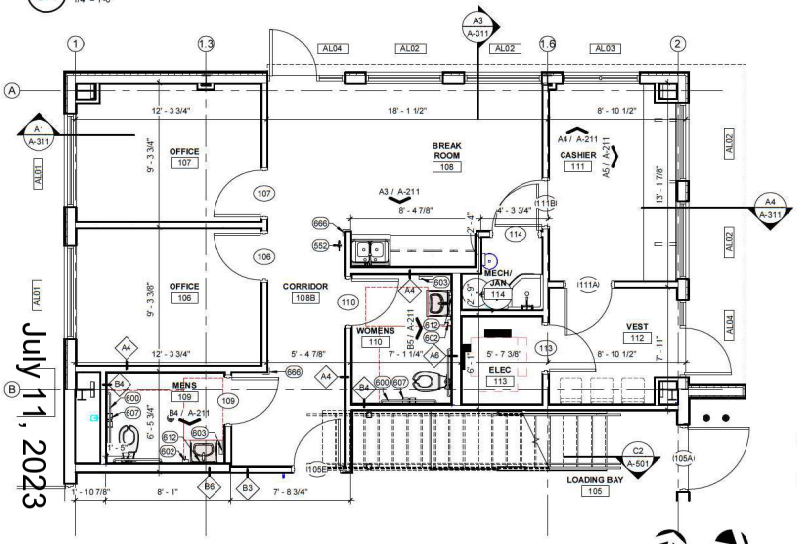

A1 ENLARGED PLAN
1/4" = 1'-0"

WEST SITE PLAN NORTH
NORTH SITE PLAN NORTH

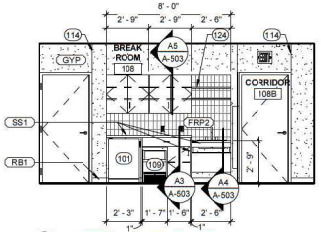

A3 INTERIOR ELEVATION
1/4" = 1'-0"

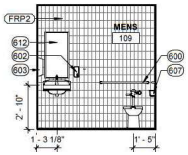

B4 INTERIOR ELEVATION
1/4" = 1'-0"

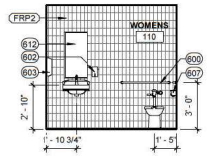

B5 INTERIOR ELEVATION
1/4" = 1'-0"

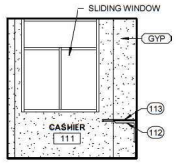

A4 INTERIOR ELEVATION
1/4" = 1'-0"

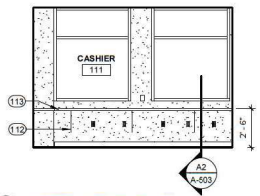

A5 INTERIOR ELEVATION
1/4" = 1'-0"

Parkhill

THIS DOCUMENT IS RELEASED ON 06-27-2023 FOR THE PURPOSE OF INTERIM REVIEW UNDER THE AUTHORITY OF JESSE N. BERNARD, R.A., TEXAS LICENSE #29194. IT IS NOT TO BE USED FOR REGULATORY APPROVAL, CONSTRUCTION, BIDDING OR PERMIT PURPOSES. PARKHILL, SMITH & COOPER, INC.

Parkhill.com

Citizen Collection Stations

City of Midland

MIDLAND
Fuel the Energy!

CLIENT
City of Midland

300 North Loraine
Midland, TX

PROJECT NO.
6119.21 - WEST
40015.22 - NORTH

#	DATE	DESCRIPTION
-	06/27/2023	City Council Review

Interior Elevations & Enlarged Plans

A-211

PACKET 6.447 July 11, 2023

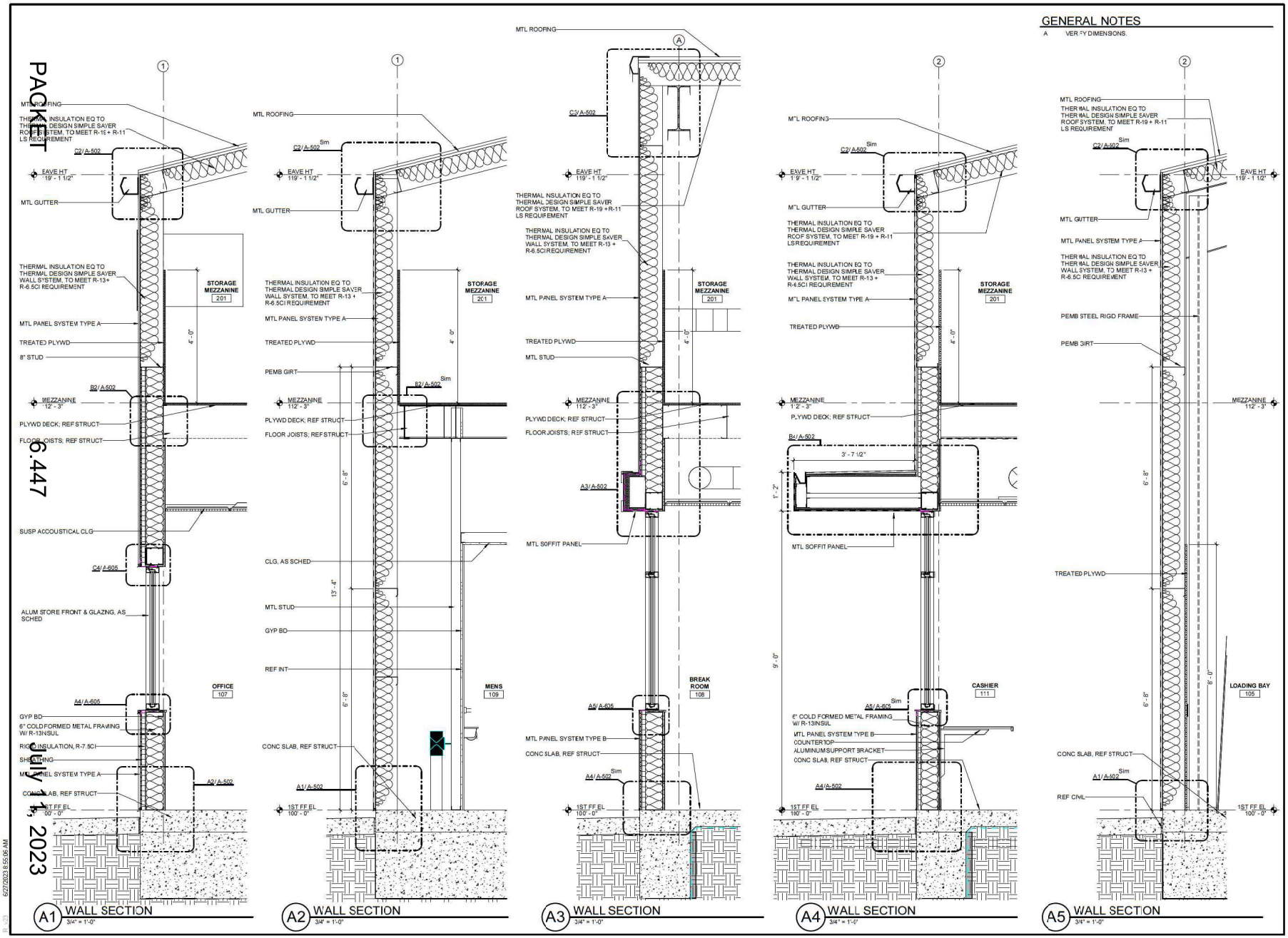

6/27/2023 8:55:06 AM

Parkhill

THIS DOCUMENT IS RELEASED ON 06-27-2023 FOR THE PURPOSE OF INTERIM REVIEW UNDER THE AUTHORITY OF JESSE N. BERARD, R.A., TEXAS LICENSE #29194. IT IS NOT TO BE USED FOR REGULATORY APPROVAL, CONSTRUCTION, BIDDING OR PERMIT PURPOSES. PARKHILL, SMITH & COOPER, INC.

Parkhill.com

Citizen Collection Stations

City of Midland

MIDLAND Fuel the Energy!

CLIENT
City of Midland

300 North Loraine
Midland, TX

PROJECT NO.
6119.21 - WEST
40015.22 - NORTH

#	DATE	DESCRIPTION
-	06/27/2023	City Council Review

Wall Sections

A-311

PACKET

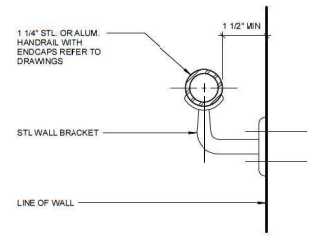

D2 STAIR DETAIL
3" = 1'-0"

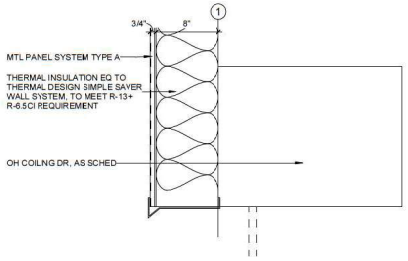

C1 SECTION DETAIL
1 1/2" = 1'-0"

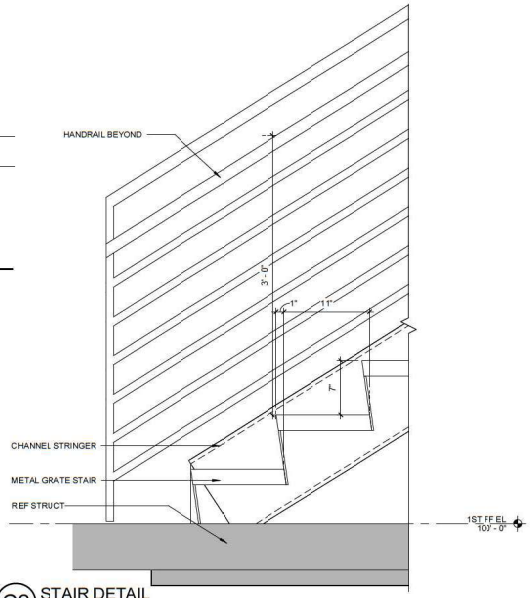

C2 STAIR DETAIL
1 1/2" = 1'-0"

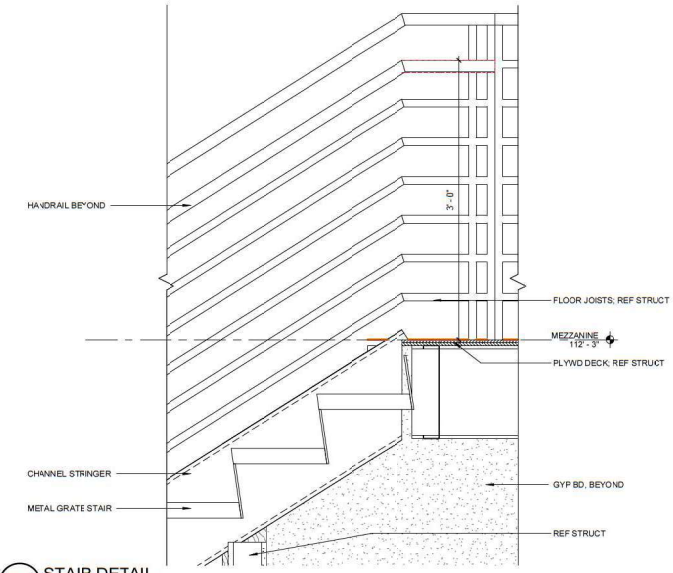

C4 STAIR DETAIL
1 1/2" = 1'-0"

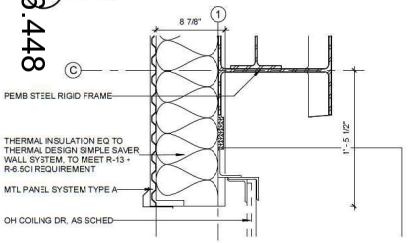

B1 PLAN DETAIL
1 1/2" = 1'-0"

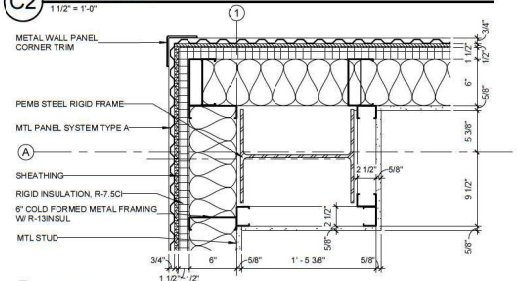

B2 PLAN DETAIL
1 1/2" = 1'-0"

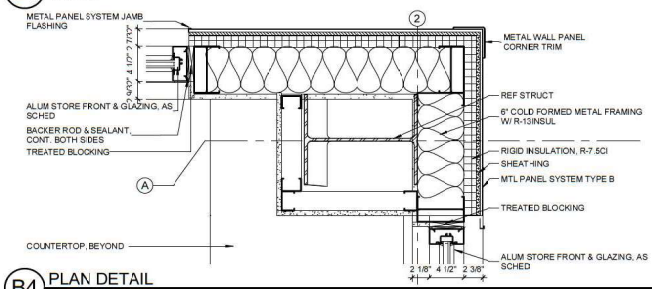

B4 PLAN DETAIL
1 1/2" = 1'-0"

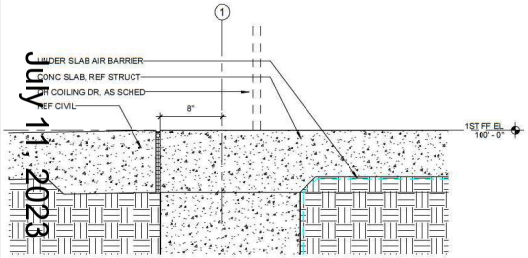

A1 SECTION DETAIL
1 1/2" = 1'-0"

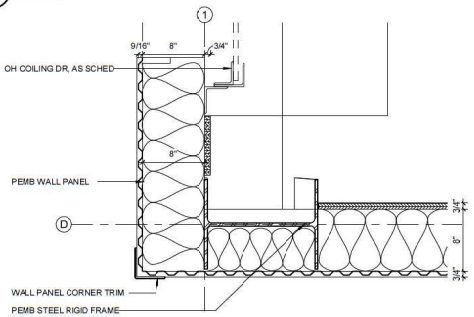

A3 PLAN DETAIL
1 1/2" = 1'-0"

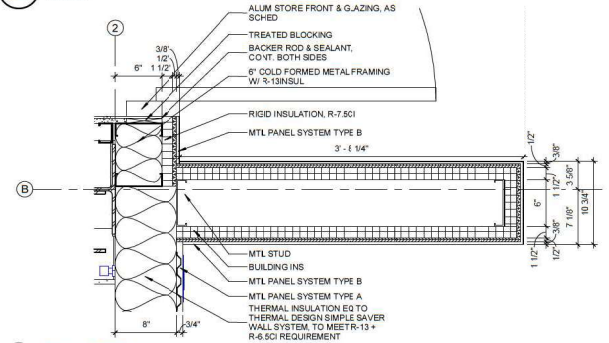

A4 PLAN DETAIL
1 1/2" = 1'-0"

THIS DOCUMENT IS RELEASED ON 06-27-2023 FOR THE PURPOSE OF INTERIM REVIEW UNDER THE AUTHORITY OF JESSE N. BERNARD, R.A. TEXAS LICENSE #29194. IT IS NOT TO BE USED FOR REGULATORY APPROVAL, CONSTRUCTION, BIDDING OR PERMIT PURPOSES. PARKHILL, SMITH & COOPER, INC.

Parkhill.com

Citizen Collection Stations

City of Midland

CLIENT
City of Midland

300 North Loraine
Midland, TX

PROJECT NO.
6119.21 - WEST
40015.22 - NORTH

#	DATE	DESCRIPTION
-	06/27/2023	City Council Review

Details

A-501

CD 6.448

July 11, 2023

6/27/2023 8:55:10 AM

PACKET

6.449

July 11 2023

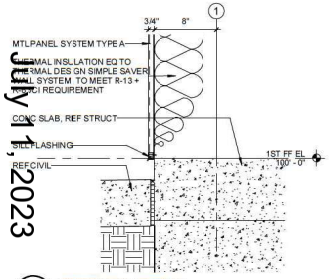

A1 SECTION DETAIL
1 1/2" = 1'-0"

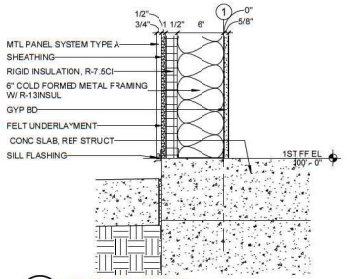

A2 SECTION DETAIL
1 1/2" = 1'-0"

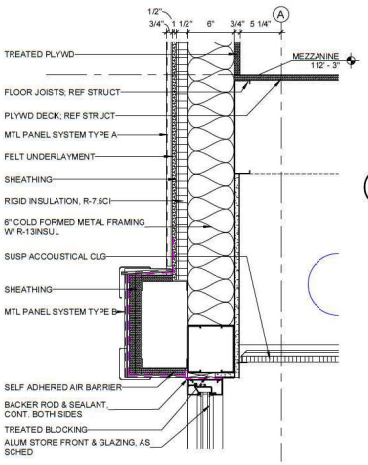

A3 SECTION DETAIL
1 1/2" = 1'-0"

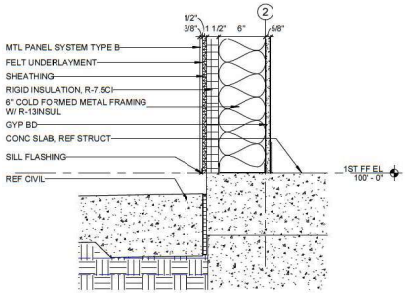

A4 SECTION DETAIL
1 1/2" = 1'-0"

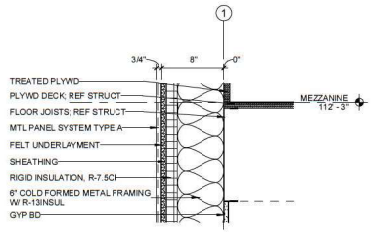

B2 SECTION DETAIL
1 1/2" = 1'-0"

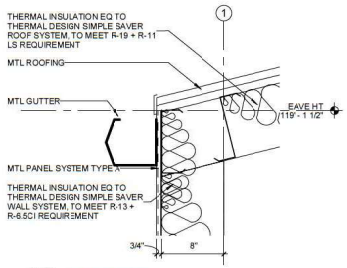

C2 ROOF DETAIL
1 1/2" = 1'-0"

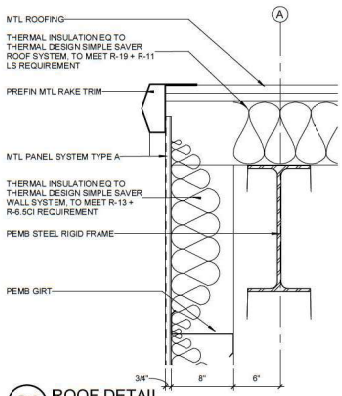

C3 ROOF DETAIL
1 1/2" = 1'-0"

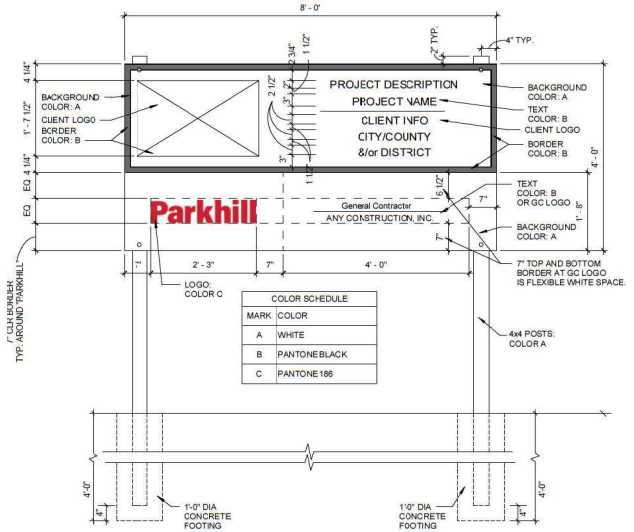

C4 PROJECT SIGN - L
3/4" = 1'-0"

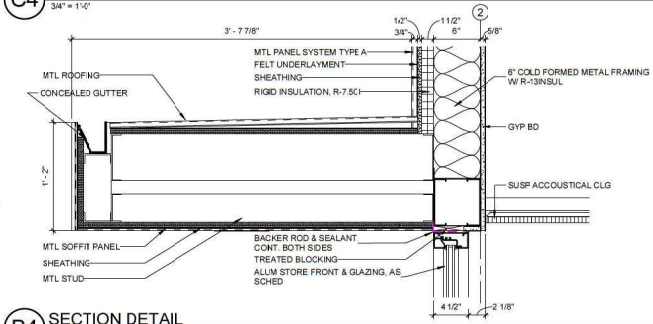

B4 SECTION DETAIL
1 1/2" = 1'-0"

Parkhill

THIS DOCUMENT IS RELEASED ON 06-27-2023 FOR THE PURPOSE OF INTERIM REVIEW UNDER THE AUTHORITY OF JESSE N. BERNARD, R.A. TEXAS LICENSE #29194. IT IS NOT TO BE USED FOR REGULATORY APPROVAL, CONSTRUCTION, BIDDING OR PERMIT PURPOSES. PARKHILL, SMITH & COOPER, INC.

Parkhill.com

Citizen Collection Stations

City of Midland

MIDLAND Fuel the Energy!

CLIENT
City of Midland

300 North Loraine
Midland, TX

PROJECT NO.
6119.21 - WEST
40015.22 - NORTH

#	DATE	DESCRIPTION
-	06/27/2023	City Council Review

Details

A-502

6/27/2023 8:55:14 AM

PACKET

6.450

July 11, 2023

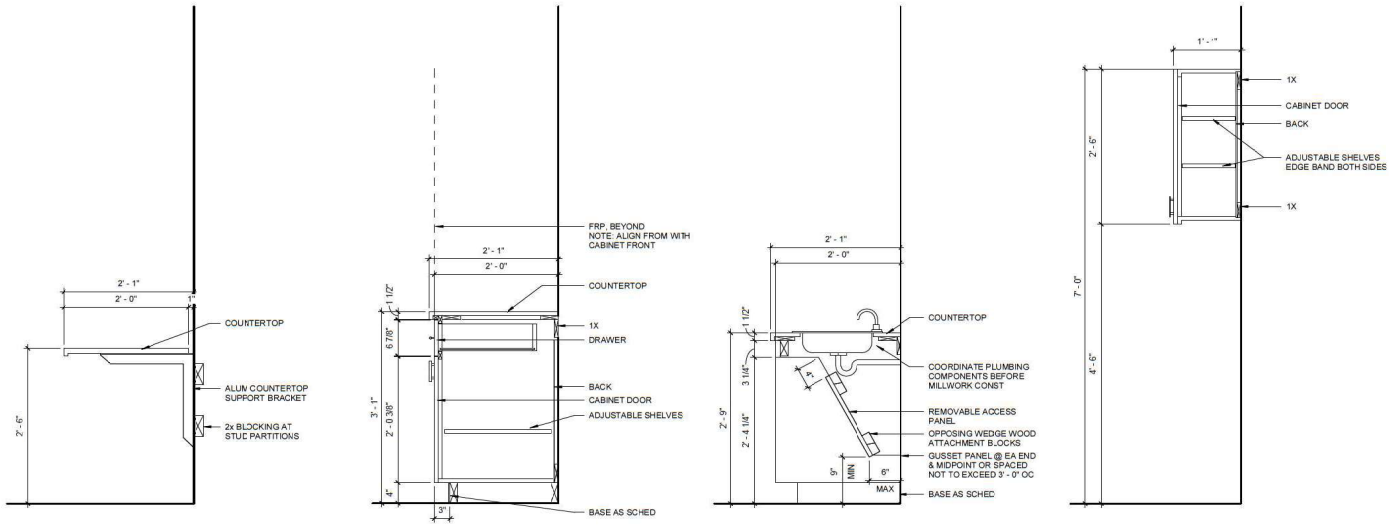

A2 MILLWORK SECTION
1" = 1'-0"

A3 MILLWORK SECTION
1" = 1'-0"

A4 MILLWORK SECTION
1" = 1'-0"

A5 MILLWORK SECTION
1" = 1'-0"

6/27/2023 8:55:14 AM

Parkhill

THIS DOCUMENT IS RELEASED ON 06-27-2023 FOR THE PURPOSE OF INTERIM REVIEW UNDER THE ALTHORITY OF JESSE N. BERNARD, R.A. TEXAS LICENSE #29194. IT IS NOT TO BE USED FOR REGULATORY APPROVAL, CONSTRUCTION, BIDDING OR PERMIT PURPOSES. PARKHILL, SMITH & COOPER, INC.

Parkhill.com

Citizen Collection Stations

City of Midland

MIDLAND
Fuel the Energy!

CLIENT
City of Midland

300 North Loraine
Midland, TX

PROJECT NO.
6119.21 - WEST
40015.22 - NORTH

#	DATE	DESCRIPTION
-	06/27/2023	City Council Review

Details

A-503

PACKET 6.451 July 11, 2023

DOOR SCHEDULE

	DOOR								FIRE	FRAME		DETAILS[6]			
MARK	PR	WIDTH[1]	WIDTH[1]	HEIGHT[1]	CONST[2]	TYPE[3]	GLAZING		RATING	CONST[4]	SIZE[5]	HEAD	JAMB	SILL	REMARKS[7]
105A		4' - 0"		7' - 0"	HMPF	F	-			HM01	5"	B1A-605	A1A-605		M8
105B		3' - 0"		7' - 0"	HMPF	F	-			HM02	5"	B1A-605	A1A-605		M8
105C		16' - 0"		14' - 9"	ALUM	OH2				OVHD		C1A-501	B1A-501	A1A-501	
105D		4' - 0"		7' - 0"	HMPF	F	-			HM02	5"	B1A-601	A1A-601		M8
105E		3' - 0"		7' - 0"	HMPF	F	-			HM01	5 1/4"	B3A-605	A3A-605		M8
106		3' - 0"		7' - 0"	PLAM	F	-			HM01	5 7/8"	B3A-605	A3A-605		M8
107		3' - 0"		7' - 0"	PLAM	F	-			HM01	5 7/8"	B3A-605	A3A-605		M8
108		3' - 0"		7' - 0"	ALUM	A1	G12			ALUM		-	-		M8
109		3' - 0"		7' - 0"	PLAM	F	-			HM01	5 7/8"	B3A-605	A3A-605		
110		3' - 0"		7' - 0"	PLAM	F	-			HM01	5 7/8"	B3A-605	A3A-605		
111A		3' - 0"		7' - 0"	PLAM	F	-			HM01	5 7/8"	B3A-605	A3A-605		M8
111B		3' - 0"		7' - 0"	PLAM	F	-			HM01	5 7/8"	B3A-605	A3A-605		
112		3' - 0"		7' - 0"	ALUM	A1	G12			ALUM		-	-		
113		3' - 0"		7' - 0"	PLAM	F	-			HM01	5 7/8"	B3A-605	A3A-605		M8
114		3' - 0"		7' - 0"	PLAM	F	-			HM01	5 7/8"	B3A-605	A3A-605		M8

DOOR SCHEDULE FOOTNOTES X=EXISTING

1. DOOR SIZE (INDICATED IN INCHES)
   SIZE INDICATED IS NOMINAL. REDUCTION SHALL BE MADE FOR THRESHOLD & EDGE CLEARANCES. ALL DOORS ARE 1 3/4" THICK UNO.
2. DOOR CONSTRUCTION/VENEER (## - REF TO I-001)
   SCTF = SOLID CORE WOOD, TRANSPARENT FINISH
   SCPF = SOLID CORE WOOD, PAINT FINISH
   SCLP = SOLID CORE WOOD, LAMINATED PLASTIC COVER
   SCIR = SOLID CORE WOOD, IMPACT RESISTANT
   HM = HOLLOW METAL
   HMLP = HOLLOW METAL LAMINATED PLASTIC COVER
   HMPF = HOLLOW METAL, PAINT FINISH
3. DOOR TYPE
   REFER TO DOOR TYPE SCHEDULE
4. FRAME CONSTRUCTION
   REFER TO DOOR FRAME SCHEDULES
   HM = HOLLOW METAL
   HMPF = HOLLOW METAL, PAINT FINISH
   ALUM = ALUMINUM
   WDTF = SOLID WOOD, TRANSPARENT FINISH
   WDPF = SOLID WOOD, PAINT FINISH
5. DETAIL # → A1/A-701 → SHEET #
   * = SIMILAR
6. REMARKS
   MISCELLANEOUS (GENERAL NOTES)
   M1 = VERIFY RCUGH OPENINGS
   M2 = DOOR TRIM TO MATCH EXISTING
   M3 = LEAD LINED DOOR & FRAME
   M4 = VERIFY FINISH OPENING SIZE
   M5 = PROVIDE HOSPITAL STOP ON FRAME, SEE STANDARD DOOR DETAILS (THIS SHEET)
   M6 = CASED OPENING FRAME
   M7 = SEE STANDARD DOOR DETAILS (THIS SHEET) FOR DOOR HEAD / TRANSOM PANEL DETAILS
   M8 = CARD READER
7. TRANSOM
   T1 = WOOD TRANSOM TO MATCH DOOR, SIZE AS NOTED
   T2 = HOLLOW METAL TRANSOM TO MATCH EXSTING

NOTE: QUANTITIES HERE ARE FOR A SINGLE BUILDING, MODIFY AS NECESSARY TO MEET BOTH BUILDINGS

GLAZING SCHEDULE

MARK	TYPE
G12	LOW-E COATED, TINTED INSULATING GLASS

STANDARD DOOR DETAILS

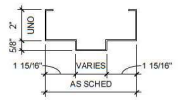

STANDARD FRAME

DOOR TYPE SCHEDULE

NOTE: DOOR LITE OPENINGS ARE TO LITE FRAME NTERIOR OPENING (DAYLIGHT OPENING). RIGHT EDGE OF SWING DOOR IS STRIKE EDGE. THIS LEGEND TAKES PRECEDENCE OVER OTHER DRAWINGS.

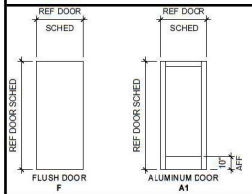

OVERHEAD DOOR TYPE SCHEDULE

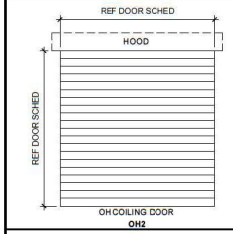

HOLLOW METAL FRAME SCHEDULE

HM00 NOTE: FRAME FACES ARE 2" UNO



Parkhill

THIS DOCUMENT IS RELEASED ON 06-27-2023 FOR THE PURPOSE OF INTERIM REVIEW UNDER THE AUTHORITY OF JESSE N. BERNARD, R.A. TEXAS LICENSE #29154. IT IS NOT TO BE USED FOR REGULATORY APPROVAL, CONSTRUCTION, BIDDING OR PERMIT PURPOSES. PARKHILL, SMITH & COOPER, INC.

Parkhill.com

Citizen Collection Stations

City of Midland

MIDLAND Fuel the Energy!

CLIENT
City of Midland

300 North Loraine
Midland, TX

PROJECT NO.
6119.21 - WEST
40015.22 - NORTH

#	DATE	DESCRIPTION
-	06/27/2023	City Council Review

Door & Glazing Schedule

A-601

6/26/2023 4:31:55 PM

PACKET

ALUMINUM FRAME SCHEDULE AL00 NOTE: FRAME FACES ARE 2" UNO

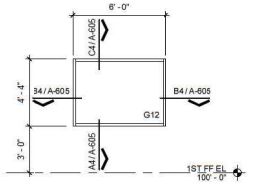

A..01

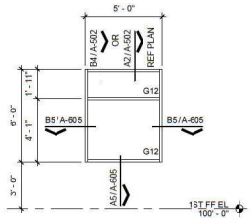

AL02

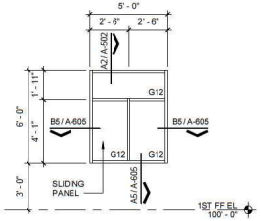

AL03

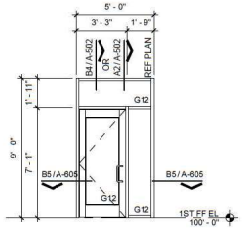

AL04

GENERAL NOTES

A. 2" ALUMNUM FRAME SCHEDULE NOTES AS NEEDED.

NOTE: QUANTITIES ON FLOOR PLAN ARE FOR A SINGLE BUILDING, MODIFY AS NECESSARY TO MEET BOTH BUILDINGS

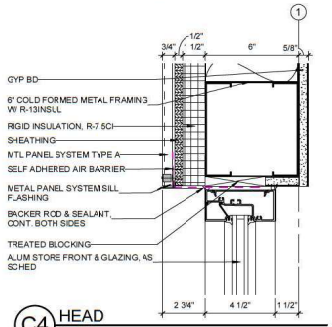

C4 HEAD 3" = 1'-0"

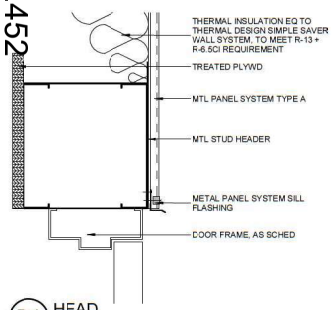

B1 HEAD 3" = 1'-0"

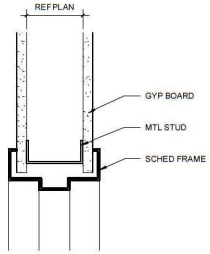

B3 HEAD 3" = 1'-0"

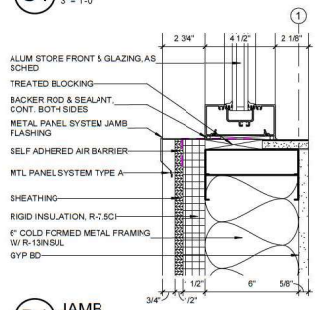

B4 JAMB 3" = 1'-0"

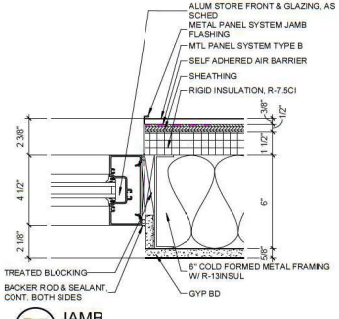

B5 JAMB 3" = 1'-0"

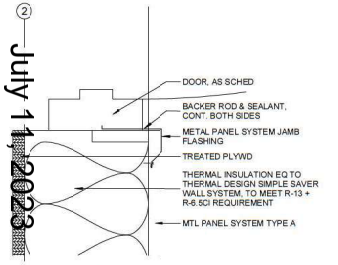

A1 JAMB 3" = 1'-0"

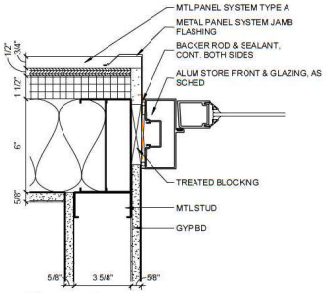

A2 JAMB 3" = 1'-0"

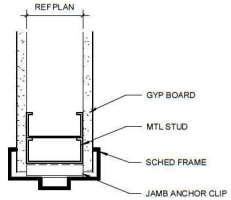

A3 JAMB 3" = 1'-0"

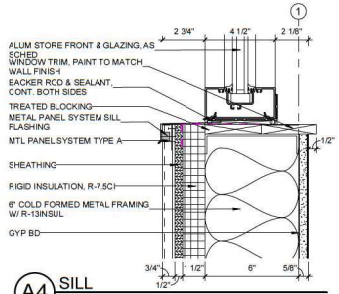

A4 SILL 3" = 1'-0"

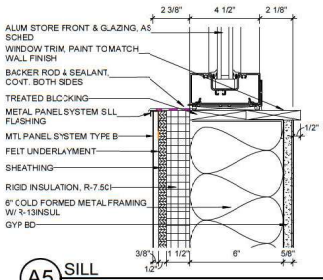

A5 SILL 3" = 1'-0"

6.452

July 11, 2023

6/27/2023 8:55:18 AM

Parkhill

THIS DOCUMENT IS RELEASED ON 06-27-2023 FOR THE PURPOSE OF INTERIM REVIEW UNDER THE ALTHORITY OF JESSE N. BERNARD, R.A. TEXAS LICENSE #29194. IT IS NOT TO BE USED FOR REGULATORY APPROVAL, CONSTRUCTION, BIDDING OR PERMIT PURPOSES. PARKHILL, SMITH & COOPER, INC.

Parkhill.com

Citizen Collection Stations

City of Midland

MIDLAND Fuel the Energy!

CLIENT
City of Midland

300 North Loraine
Midland, TX

PROJECT NO.
6119.21 - WEST
40015.22 - NORTH

#	DATE	DESCRIPTION
-	06/27/2023	City Council Review

Aluminum Frame Schedule & Opening Details

A-605

PACKET

6.453

July 11, 2023

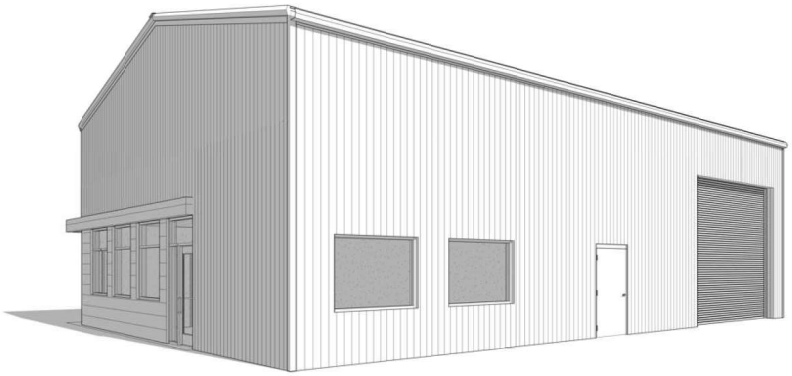

A1 NORTH WEST EXTERIOR VIEW
NTS

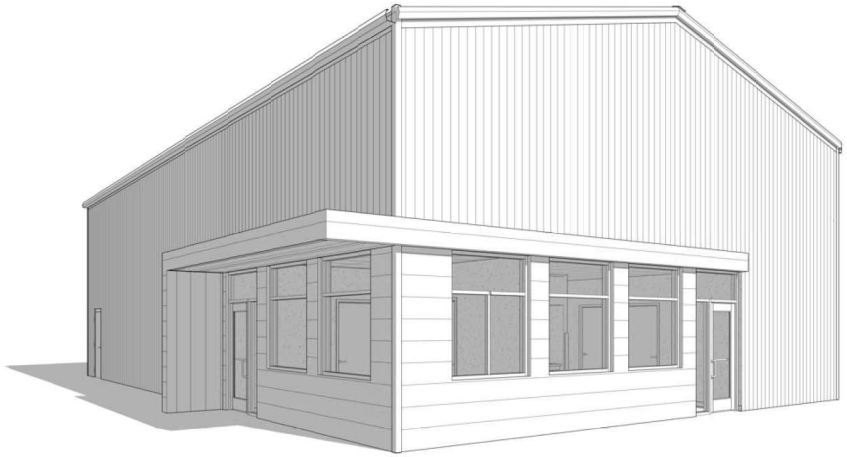

A4 NORTH EAST EXTERIOR VIEW
NTS

Parkhill

THIS DOCUMENT IS RELEASED ON 06-27-2023 FOR THE PURPOSE OF INTERIM REVIEW UNDER THE ALTHORITY OF JESSE N. BERNARD, R.A. TEXAS LICENSE #29194. IT IS NOT TO BE USED FOR REGULATORY APPROVAL, CONSTRUCTION, BIDDING OR PERMIT PURPOSES. PARKHILL, SMITH & COOPER, INC.

Parkhill.com

Citizen Collection Stations

City of Midland

MIDLAND
Fuel the Energy!

CLIENT
City of Midland

300 North Loraine
Midland, TX

PROJECT NO.
6119.21 - WEST
40015.22 - NORTH

#	DATE	DESCRIPTION
-	06/27/2023	City Council Review

3D Views

A-901

6/27/2023 8:59:56 AM

PACKET 6.454 July 11, 2023

PLUMBING FIXTURE MOUNTING HEIGHT

* ALL DIMENSIONS ARE IN INCHES AND FROM FINISHED FLOOR	AGES: 13 THROUGH ADULTS	
	ADA/TAS	STANDARD (4)
WATER CLOSETS		
TOP OF SEAT	17 - 19 MAX	16 - 18 MAX
FLUSH CONTROLS (HANDLE HEIGHT)	30 MAX	30 MAX
URINALS		
RIM OF BASIN	17 MAX	24 MAX
MINIMUM DEPTH (5)	13 1/2 MIN	13 1/2 MIN
FLUSH CONTROLS (HANDLE HEIGHT)	46 MAX	46 MAX
LAVATORIES AND SINKS		
RIM (10)	34 MAX	34 MAX
KNEE CLEARANCE	27 MIN	27 MIN
FRONT EDGE TO WALL/FAUCET HANDLE	20 -25 MAX	20 -25 MAX
DRINKING FOUNTANS AND ELECTRIC WATER COOLERS		
SPOUT OUTLETS		
HEIGHT (LOW)	36 MAX	- - -
HEIGHT (HIGH)	38 - 43 MAX	- - -
DISTANCE FROM FRONT EDGE	5 MAX	- - -
SHOWERS		
FIXED HEAD (NON-MEDICAL APPLICATION)	48 MAX	60"
ADJUSTABLE HEAD (9)	48 MAX	60"
HOSE LENGTH	59 MIN	- - -

NOTES:

1. CONTRACTOR SHALL REFER TO ARCHITECTURAL PLANS FOR LOCATIONS OF PLUMBING FIXTURES, GRAB BARS, DISPENSERS, ETC. WITH RESPECT TO WALLS, STALLS, ETC.
2. ACCESSIBILITY GUIDELINES SHOWN ARE FOR INFORMATIONAL PURPOSES ONLY, AND INTENDED TO SERVE AS A GUIDE FOR CONSTRUCTION PROFESSIONALS AND OWNERS.
3. SOME OF THE INFORMATION SHOWN HERE MAY NOT BE APPLICABLE TO THIS PROJECT
4. STANDARD HEIGHT INFORMATION IS OBTAINED FROM ASPE (AMERICAN SOCIETY OF PLUMBING ENGINEERS). HEIGHTS NOT NOTED BY INFORMATION ON DRAWINGS.
5. DEPTH TO BE MEASURED FROM THE OUTER FACE OF THE URINAL RIM TO THE BACK OF THE FIXTURE
6. KNEE CLEARANCE FOR LAVATORIES AND SINKS SHALL COMPLY WITH TAS.
7. REFER TO DETAIL FOR COUNTER MOUNTED SINKS WITH BUBBLERS FOR DIMENSIONS, ON ARCHITECTURAL DRAWINGS.
8. DRINKING FOUNTAINS AND ELECTRIC WATER COOLER DISTANCES FROM FRONT EDGE INCLUDES BUMPERS. KNEE CLEARANCES MUST BE MAINTAINED THROUGH THE MIN./MAX. RANGE HEIGHT FOR THE SPOUT.
9. THE 30" SLIDE BAR SHALL BE MOUNTED AT A HEIGHT SO THE HAND HELD SHOWER WAND SHALL BE MOUNTED NO HIGHER THAN 48" ABOVE SHOWER FINISHED FLOOR.
10. THE CONTRACTOR SHALL COORDINATE WITH THE COUNTER TOP/BASE CABINET MANUFACTURER TO VERIFY THAT THE RIM OF THE LAVATORY/SINK IS INSTALLED AT NO MORE THAN THE MAXIMUM HEIGHT ALLOWED.

GENERAL NOTES

1. GENERAL NOTES ON THIS SHEET ARE APPLICABLE TO EACH PLUMBING DRAWING OF THIS SET OF CONSTRUCTION DOCUMENTS. NOTES SPECIFIC TO INDIVIDUAL PLUMBING DRAWINGS WILL BE SHOWN ON THE RESPECTIVE PLUMBING DRAWING.
2. THE CONTRACTOR SHALL PROVIDE A COMPLETE PLUMBING SYSTEM TO INCLUDE ALL LABOR, MATERIALS, TOOLS AND EQUIPMENT FOR A COMPLETE AND FUNCTIONAL SYSTEM INCLUDING ALL NECESSARY APPURTENANCES CUSTOMARILY INCLUDED IF NOT SPECIFICALLY CALLED OUT.
3. ENTIRE INSTALLATION, INCLUDING MATERIALS, EQUIPMENT AND WORKMANSHIP SHALL CONFORM WITH ALL APPLICABLE LAWS, CODES AND REGULATIONS.
4. APPLICABLE STANDARDS AND REGULATORY BODIES HAVE JURISDICTION OVER THE CLASS OF WORK.
5. MATERIAL AND EQUIPMENT SHALL HAVE STAMPS OR SEALS OF AHRI, ASME, UL OR ASTM.
6. THE CONTRACTOR SHALL MAKE TESTS FOR ACCEPTANCE AND APPROVAL AS REQUIRED BY CODE AND THE REQUIREMENTS OF APPLICABLE REGULATORY AGENCIES. REQUIRED TESTS SHALL BE PERFORMED IN THE PRESENCE OF THE ENGINEER OF RECORD AND/OR OWNER UNLESS OTHERWISE WAIVED IN WRITING.
7. THE CONTRACTOR SHALL OBTAIN AND PAY FOR ALL PERMITS, LICENSES, DOCUMENTS AND SERVICES RELATED TO INSTALLATION OF THE WORK.
8. THE CONTRACTOR SHALL COORDINATE HIS WORK WITH THE OTHER TRADES IN ORDER TO RESOLVE ANY CONFLICTS THAT MIGHT ARISE DUE TO THE LOCATION OF EQUIPMENT OR THE USE OF SPACE.
9. EQUIPMENT OF DIFFERENT ELECTRICAL CHARACTERISTICS MAY BE FURNISHED PROVIDED SUCH PROPOSED EQUIPMENT IS APPROVED IN WRITING AND CONNECTING ELECTRICAL SERVICE, CIRCUIT BREAKERS AND CONDUIT ARE APPROPRIATELY MODIFIED AT NO COST TO THE OWNER.
10. RUN ALL HORIZONTAL DOMESTIC COLD WATER, DOMESTIC HOT WATER, AND VENT PIPING ABOVE THE CEILING UNLESS OTHERWISE NOTED.
11. MAKE PIPE PENETRATIONS OF ALL WALLS WITH SLEEVES AS NOTED IN THE SPECIFICATIONS.
12. DO NOT INSTALL EQUIPMENT, PIPING OR DUCTWORK OVER ANY ELECTRICAL EQUIPMENT OR ELECTRICAL SERVICE SPACE.
13. LAYOUT OF PIPING IS DIAGRAMMATIC. RUN ALL EXPOSED PIPING AS HIGH AS POSSIBLE UNLESS OTHERWISE NOTED. ALLOW FOR RISES, DROPS AND OFFSETS AS REQUIRED.
14. EXTEND CONDENSATE DRAIN LINES AS INDICATED. ALL CONDENSATE DRAIN PIPING SHALL BE TRAPPED AND PITCHED DOWN IN DIRECTION OF FLOW A MINIMUM OF 1/8 INCH PER 1 FOOT.
15. INSTALL EQUIPMENT TO FACILITATE SERVICING, MAINTENANCE AND REPAIR OR REPLACEMENT OF ELECTRICAL COMPONENTS. AS MUCH AS PRACTICAL, CONNECT EQUIPMENT FOR EASE OF DISCONNECTING, WITH A MINIMUM OF INTERFERENCE WITH OTHER INSTALLATIONS.
16. FLASHING DETAILS FOR PIPES PENETRATING THE ROOF SHALL BE COORDINATED WITH ARCHITECTURE DETAILS.
17. CONTRACTOR SHALL INSTALL ALL PLUMBING VENTS AND EXHAUST AIR OUTLETS A MINIMUM OF 10'-0" AWAY (PER CODE) FROM ALL OUTSIDE AIR INTAKES, OPERABLE DOORS AND/OR WINDOWS. CONSTRUCTION DRAWINGS ARE DIAGRAMMATIC BY NATURE. FINAL MEASUREMENTS SHOULD BE MADE AT THE PROJECT SITE.
18. CONTRACTOR TO PROVIDE MEANS TO CLEAR CONDENSATE DRAIN LINE WITHOUT CUTTING THE DRAIN LINE.
19. NOT ALL SYMBOLS OR ABBREVIATIONS ARE USED.

PLUMBING ABBREVIATIONS

AUX	AUXILIARY CONDENSATE DRAIN PIPING
AVG	AVERAGE
AFF	ABOVE FINISHED FLOOR
BOJ	BOTTOM OF JOIST
BTUH	BRITISH THERMAL UNIT PER HOUR
MBU	BRITISH THERMAL UNIT DIVIDED BY 1,000
CD	CONDENSATE DRAIN PIPING
DEG	DEGREE
°F	DEGREES FAHRENHEIT
DIA	DIAMETER
ID	DIAMETER, INSIDE
OD	DIAMETER, OUTSIDE
DDC	DIRECT DIGITAL CONTROLS
DCW	DOMESTIC COLD WATER
DHW	DOMESTIC HOT WATER
DHWR	DOMESTIC HOT WATER RETURN
EWT	ENTERING WATER TEMPERATURE
ECW	EXISTING DOMESTIC COLD WATER
EHW	EXISTING DOMESTIC HOT WATER
EHWR	EXISTING DOMESTIC HOT WATER RETURN
ES	EXISTING SEWER
ET	EXPANSION TANK
FT	FEET
GAL	GALLONS
GPD	GALLONS PER DAY
GPH	GALLONS PER HOUR
GPM	GALLONS PER MINUTE
HP	HORSEPOWER
IN	INCHES
INHG	INCHES OF MERCURY
INH2O	INCHES OF WATER
KW	KILOWATT
LWT	LEAVING WATER TEMPERATURES
MPG	MEDIUM PRESSURE NATURAL GAS
G	NATURAL GAS
NC	NORMALLY CLOSED
NO	NORMALLY OPEN
PH	PHASE
LBS	POUNDS
PSI	POUNDS PER SQUARE INCH
PRV	PRESSURE REDUCED VALVE
RPZ	REDUCED PRESSURE BACKFLOW PREVENTER ASSEMBLY
RPM	REVOLUTIONS PER MINUTE
SA	SHOCK ABSORBER / ARRESTOR
SQ.FT.	SQUARE FEET
T&P	TEMPERATURE AND PRESSURE VALVE
TOJ	TOP OF JOIST
TDH	TOTAL DYNAMIC HEAD
UF	UNDERFLOOR
UG	UNDERGROUND
VFD	VARIABLE FREQUENCY DRIVE
VEL	VELOCITY
VTR	VENT THROUGH ROOF
V	VOLTS

PIPING LEGEND

- DOMESTIC COLD WATER
- DOMESTIC HOT WATER
- DOMESTIC HOT WATER RETURN
- SEWER
- VENT
- —CD— CONDENSATE DRAIN
- —AUX— AUXILIARY DRAIN
- —G— NATURAL GAS
- —RD— ROOF DRAIN PIPING
- —OD— OVERFLOW DRAIN PIPING
- —A— MEDICAL AIR
- —NOX— NITROUS OXIDE
- —N— NITROGEN
- —O— OXYGEN
- —V— VACUUM
- —WAGD— WASTE ANESTHETIC GAS DISPOSAL
- INDICATES DEMOLITION
- FLUID FLOW DIRECTION
- PIPE TURNED UP
- PIPE TURNED DOWN

EXISTING PIPING IS INDICATED SAME AS ABOVE, EXCEPT IN A LIGHTER PEN WEIGHT.

PLUMBING SYMBOL LEGEND

- BUTTERFLY VALVE
- BALL VALVE
- CHECK VALVE
- GATE VALVE
- PRESSURE REDUCING VALVE
- FLANGE
- UNION
- STRAINER
- PLUG VALVE
- GAS REGULATOR
- CONNECT TO EXISTING
- POINT OF DISCONNECT P.O.D

Parkhill

THIS DOCUMENT IS RELEASED ON DATE INDICATED FOR THE PURPOSE OF INTERIM REVIEW UNDER THE AUTHORITY OF BRADLEY BLOUNT LICENSE # 115111. IT IS NOT TO BE USED FOR REGULATORY APPROVAL, CONSTRUCTION, BIDDING OR PERMIT PURPOSES. PARKHILL, SMITH & COOPER, INC.

6/27/2023

Parkhill.com

Citizen Collection Stations

City of Midland

MIDLAND Fuel the Energy!

CLIENT
City of Midland

300 North Loraine
Midland, TX

PROJECT NO.
6119.21 - WEST
40015.22 - NORTH

#	DATE	DESCRIPTION
-	06/27/2023	City Council Review

Plumbing Abbreviations & Legends

P-001

6/26/2023 8:56:29 AM

PACKET 6.455 July 11, 2023

GENERAL NOTES

A REFER TO GENERAL NOTES ON P-0C1.
B ALL INFORMATION SHOWN ON THESE PLANS APPLIES TO 2 DIFFERENT BUILDINGS.

KEY NOTES

AS INDICATED BY: (#)

1 NEW RO SYSTEM TO SUPPLY ICE MACHINE AND S-1. S-1 SHALL HAVE RO MANUFACTURER PROVIDED SPIGOT RETROFITTED. REFER TO MANUFACTURER FOR DETAIL.
2 REFER TO CIVIL FOR CONTINUATION OF LINES.
3 ADD 3" BALL VALVE IN VERTICAL. SEE P-111 P1 FOR DETAIL.
4 TURN LINE UP INTO MECHUAN 114.
5 DOWN THRU MEZZENINE FINISHED FLOOR TO CEILING SPACE.
6 TURN 3/4" CONDENSATE PIPE DOWN IN WALL TO 16"A.F.F. TURN DRAIN LINE OUT OF WALL AND DOWN TO SPILL TO SERVICE SINK. PROVIDE ESCUTCHEON AT WALL PENETRATION
7 FLOOR DRAIN SHALL BE UNDER MILLWORK TO SERVICE UNDERCOUNTER ICE MAKER.

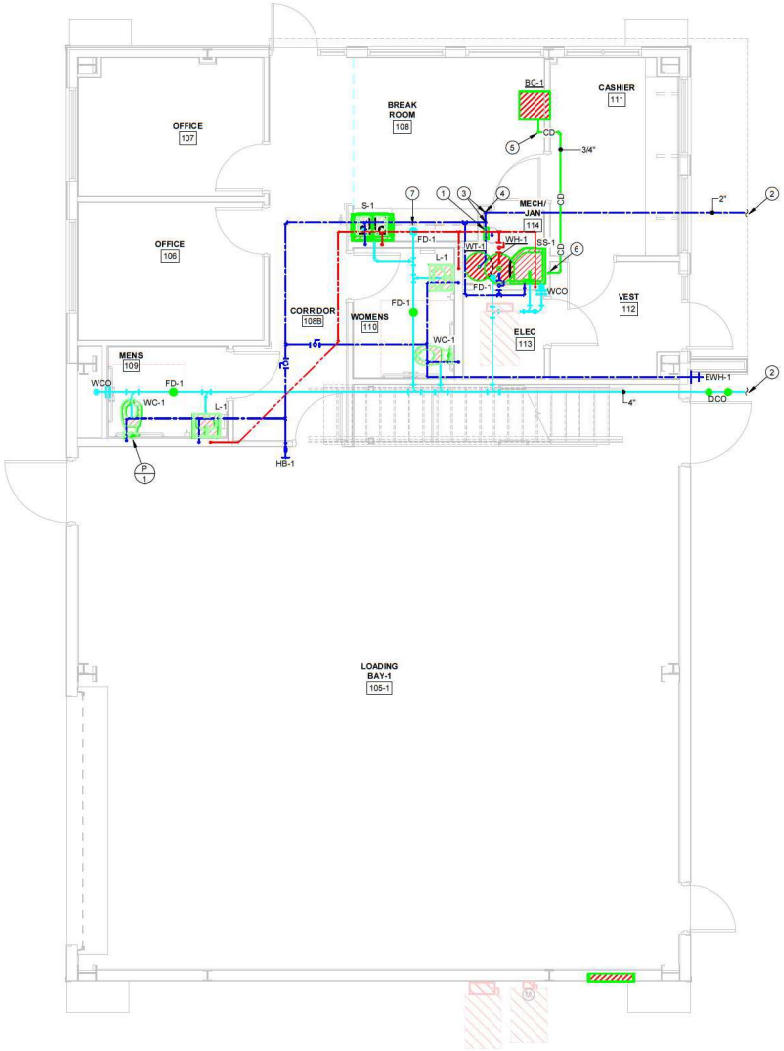

A2 PLUMBING PLAN - WEST SITE
1/4" = 1'-0"

WEST SITE PLAN NORTH
NORTH SITE PLAN NORTH

Parkhill

THIS DOCUMENT IS RELEASED ON DATE INDICATED FOR THE PURPOSE OF INTERIM REVIEW UNDER THE AUTHORITY OF BRADLEY BLOUNT LICENSE # 115111. IT IS NOT TO BE USED FOR REGULATORY APPROVAL, CONSTRUCTION, BIDDING OR PERMIT PURPOSES. PARKHILL, SMITH & COOPER, INC.

6/27/2023

Parkhill.com

Citizen Collection Stations
City of Midland

MIDLAND Fuel the Energy!

CLIENT
City of Midland

300 North Loraine
Midland, TX

PROJECT NO.
6119.21 - WEST
40015.22 - NORTH

#	DATE	DESCRIPTION
-	06/27/2023	City Council Review

Plumbing Plan
P-111

6/5/2023 8:56:31 AM

PLUMBING FIXTURE SCHEDULE

SYMBOL	MINIMUM CONNECTIONS				DESCRIPTION	MANUFACTURER	MODEL NO.	OPTIONS
	CW	HW	VENT	SEWER				
WC-1	1"	--	2"	4"	FLOOR MOUNTED FLUSH VALVE WATER CLOSET, ELONGATED CHINA BOWL WITH EVERCLEAN BOTTOM OUTLET, SIPHON JET FLUSHING ACTION, TOP SPUD, EXPOSED FLUSH VALVE WITH VANDAL RESISTANT STOP CAP, 1.28 GALLONS PER FLUSH. FLUSH HANDLE ON WIDE SIDE OF TOILET. EXTRA HEAVY DUTY OPEN FRONT WHITE SEAT WITH EVERCLEAN. 17" TO TOP OF RIM TO MEET ADULT TAS HEIGHT REQUIREMENTS.	AMERICAN STANDARD	3461.001 "MADERA FLOWISE"	VALVE - SLOAN ROYAL 111-1.28 SEAT - AMERICAN STANDARD 5901.110T
L-1	1/2"	1/2"	1-1/2"	1-1/2"	WALL MOUNTED TAS COMPLIANT LAVATORY, VITREOUS CHINA, NOMINAL 20" x 18", BACK AND SIDE SPLASHES, FOR CONCEALED ARM CARRIER, SINGLE CENTERED FAUCET HOLE. TAS COMPLIANT SINGLE LEVER FAUCET 0.5 GPM. DRAIN OUTLET WITH GRID STRAINER. REFER TO P-001 FOR TAS MOUNTING HEIGHTS.	AMERICAN STANDARD	0356.421 LUCERNE	FAUCET - MOEN M-DURA 9417F05 (SINGLE LEVER) CARRIER - WATTS TCA-411 DRAIN - AMERICAN STANDARD 7723.018
S-1	1/2"	1/2"	1-1/2"	1-1/2"	COUNTERTOP DOUBLE COMPARTMENT 30"x 21" SINK, 18 GAUGE 304 STAINLESS STEEL WITH A LUSTERTONE FINISH, REAR CENTER DRAIN PLACEMENT. FULL SPRAY SIDES AND BOTTOM, NOMINAL 13-1/2" x 18" BOWL, 6" DEEP. TAS COMPLIANT SINGLE HANDLE HIGH ARC PULLDOWN FAUCET, PULLOUT SPRAY WITH 68" BRAIDED HOSE, LEVER STYLE HANDLE, 1.5 GPM. DRAIN OUTLET WITH 304 STAINLESS STEEL BODY AND GRID STRAINER, POLISHED FINISH.	ELKAY	LRAD332160	FAUCET - MOEN 7594 DRAIN - (QTY 2) ELKAY LK18B
SS-1	3/4"	3/4"	2"	3"	FLOOR MOUNTED ENAMELED CAST IRON CORNER SERVICE SINK - 28"x28"x13", WITH WALL MOUNTED 8" CENTER FAUCET WITH VACUUM BREAKER, TOP BRACE, INTEGRAL STOPS, HOSE THREADED SPOUT, 12.96 GPM. PROVIDE 3" DRAINOUTLET WITH DOME STRAINER, MOP HANGER, HOSE/BRACKET COMBINATION. PROVIDE THERMOSTATIC MIXING VALVE.	AMERICAN STANDARD	7745.811 "FLORWELL"	FAUCET - T&S BRASS B-0665-BSTR MOP HANGER - PROFLO PF245 HOSE AND WALL HOOK- PROFLO PF296 SPLASH CATCHER PANELS - PROFLO PFWG24S MIXING VALVE: BRADLEY S59-4016
HB-1	3/4"	--	--	--	INTERIOR HOSE BIBB - ANTI-SIPHON VACUUM BREAKER, ROUGH BRASS FINISH, TEE HANDLE OR HAND WHEEL, 3/4" INLET WITH 3/4" THREADED OUTLET, PROVIDE APPROPRIATE ESCUTCHEON / FLANGE.	WOODFORD	24	(BR)
EWH-1	3/4"	--	--	--	EXTERIOR ENCASED NON-FREEZE WALL HYDRANT, DOUBLE CHECK BACKFLOW PROTECTION, CHROME BOX, ALL METAL CONSTRUCTION, STAINLESS STEEL OPERATING STEM AND ONE PIECE VALVE PLUNGER THAT CONTROLS FLOW AND DRAIN.	WOODFORD	B67	(CH)
FD-1	--	--	2"	AS SHOWN ON DWG	FLOOR DRAIN - 6" DIA. ADJUSTABLE POLISHED NICKEL BRONZE STRAINER, CAST IRON BODY WITH REVERSIBLE CLAMPING COLLAR. P-TRAP SHALL BE DEEP SEAL TYPE. COORDINATE FLOORING TYPE WITH ARCHITECTURE.	WATTS	FD-100A	TRAP GUARD - PROSET
WCO	--	--	--	AS SHOWN ON DWG	WALL CLEANOUT - NO-HUB PVC CLEANOUT TEE WITH ROUND STAINLESS STEEL COVER AND CENTER SCREW, GASKETED SEAL BRASS THREADED PLUG WITH RECESSED SOCKET.	WATTS	CO-460-RD	
DCO	--	--	--	AS SHOWN ON DWG	EXTERIOR DOUBLE CLEANOUT - CAST IRON CLEANOUT WITH ROUND ADJUSTABLE SCORIATED SECURED CAST IRON TOP, GASKET SEAL. CAST IRON PLUG WITH RECESSED SOCKET. INSTALL IN MINIMUM OF 24" x 12" x 4" REINFORCED CONCRETE PAD WITH BEVELED EDGES.	WATTS	(QTY 2) CO-200-RX	

NOTES:
1. MANUFACTURERS WITH MODEL NUMBERS ARE BASIS ITEMS. OTHER MANUFACTURERS MUST BE EQUIVALENT MANUFACTURERS UNLESS NOTED OTHERWISE.
2. FOR MOUNTING HEIGHTS OF INDIVIDUAL WALL-MOUNTED FIXTURES, REFER TO P-001 SHEET.
3. EACH UNDER SLAB OR CONCEALED P-TRAP SHALL BE A DEEP-SEAL TYPE.
4. PROVIDE EACH WALL MOUNTED PLUMBING FIXTURE SUCH AS SINKS, LAVATORIES, ELECTRIC WATER COOLERS, DRINKING FOUNTAINS, ETC., WITH A FLOOR MOUNTED SUPPORT CARRIER WITH RECTANGULAR LEGS.
5. UNLESS SCHEDULED OTHERWISE, PROVIDE EACH LAVATORY, SINK, WATER COOLER, ETC. WITH A P-TRAP ASSEMBLY CONSISTING OF A CHROME-PLATED (C.P.) CAST BRASS TRAP WITH CLEANOUT PLUG, C.P. TUBING OUTLET (MIN. 17 GA), AND C.P. CAST BRASS ESCUTCHEON WITH SETSCREW.
6. PROVIDE EACH FIXTURE WHICH REQUIRES COLD AND/OR HOT WATER (EXCEPT FLUSH VALVES) WITH A SUPPLY/STOP ASSEMBLY CONSISTING OF A C.P. BRASS STOP VALVE (MIN. 1/2") WITH QUARTER STOPS AND LOCK SHIELD, STAINLESS STEEL FLEXIBLE RISER, C.P. BRASS NIPPLE, AND C.P. CAST BRASS ESCUTCHEON WITH SETSCREW.
7. FOR EACH PUBLIC LAVATORY OR SINK WITH EXPOSED DRAIN AND BOTH COLD AND HOT SUPPLY COMPONENTS, PROVIDE A MANUFACTURED INSULATION KIT MADE FROM MOLDED CLOSED CELL VINYL THAT IS ANTI-MICROBIAL AND SEAMLESS. EACH KIT SHALL COVER THE TAILPIECE, P-TRAP, WALL BEND, BOTH WATER SUPPLY STOPS, AND BOTH WATER RISERS. KITS SHALL BE EQUAL OR EQUIVALENT TO "PROVIRA" BY McGUIRE OR LAV-GUARD BY TRUEBRO.
8. WHERE ARCHITECTURAL PLANS SHOW WATER CLOSETS AND URINALS, PROVIDE AND INSTALL FLUSHING VALVE SUCH THAT FLUSH HANDLE IS ON WIDE SIDE OF WATER CLOSET.
9. PROVIDE WATER HAMMER ARRESTORS LOCATED AND SIZED ACCORDING TO PDI RECOMMENDATIONS.
10. PROVIDE ISOLATION VALVES IN CW, HW AND HWR PIPING AS NEED OR AS SHOWN FOR ALL GROUPS OF FIXTURES.
11. INSTALL PLUMBING FIXTURES IN ACCORDANCE WITH LATEST ADA AND TAS STANDARDS.

WELL TANK SCHEDULE

SYMBOL	LOCATION	TANK VOLUME	ACCEPTANCE FACTOR	DIMENSIONS		DISCHARGE RATE (GPM)	GAUGE PRESSURE MAX/MIN (PSI)	DRAWDOWN (GAL)	MANUFACTURER	MODEL NO
				DIAMETER (IN)	HEIGHT (IN)					
WT-1	MECHANICAL 114	82	0.55	22	47	15	49/60	16.80 gal	WELLXTROL	WX-251

ELECTRIC WATER HEATER SCHEDULE

SYMBOL	LOCATION	STORAGE GALLONS	HTG ELEMENTS (QTY/KW)	ELECTRICAL		RECOVERY (GPH)	WATER TEMPERATURE		MANUFACTURER	MODEL NO
				VOLTAGE	PHASE		INLET	RISE		
WH-1	MECHANICAL 114	10	2	240 V	1	15	67 °F	53 °F	A.O. SMITH	DEL-10

NOTES:
1. WATER HEATER SHALL HAVE A PORCELANIZED GLASSLINED TANK AND BE ADDITIONALLY PROTECT AGAINST PREMATURE FAILURE BY A FACTORY INSTALLED ANODE ROD. WATER HATER SHALL HAVE A PROPERLY SIZED, FACTORY PROVIDED TEMPERATURE AND PRESSURE RELIEF VALVE.
2. TANK SHALL HAVE A THREE-YEAR WARRANTY
3. WATER HEATER SHALL BE PROVIDED WITH NON-SIMULTANEOUS ELEMENTS.

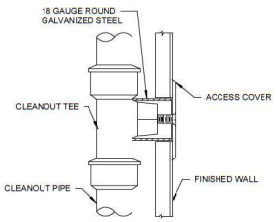

B2 WALL CLEANOUT
NTS

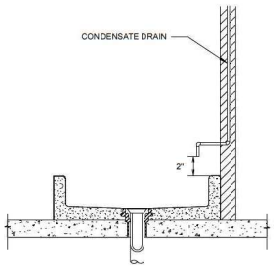

A2 CONDENSATE DRAIN TO MOP SINK
NTS

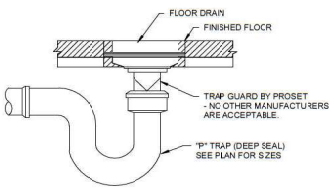

A3 FLOOR DRAIN
NTS

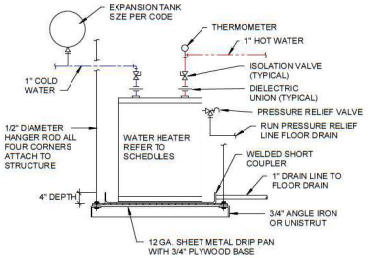

A4 ELECTRIC WATER HEATER - SUSPENDED
NTS

Parkhill

THIS DOCUMENT IS RELEASED ON DATE INDICATED FOR THE PURPOSE OF INTERIM REVIEW UNDER THE AUTHORITY OF BRADLEY BLOUNT LICENSE # 115111. IT IS NOT TO BE USED FOR REGULATORY APPROVAL, CONSTRUCTION, BIDDING OR PERMIT PURPOSES. PARKHILL, SMITH & COOPER, INC.

6/27/2023

Parkhill.com

Citizen Collection Stations

City of Midland

MIDLAND Fuel the Energy!

CLIENT
City of Midland

300 North Loraine
Midland, TX

PROJECT NO.
6119.21 - WEST
40015.22 - NORTH

#	DATE	DESCRIPTION
-	06/27/2023	City Council Review

Plumbing Details & Schedules

P-601

6/26/2023 8:56:32 AM

PACKET 6.457 July 11, 2023

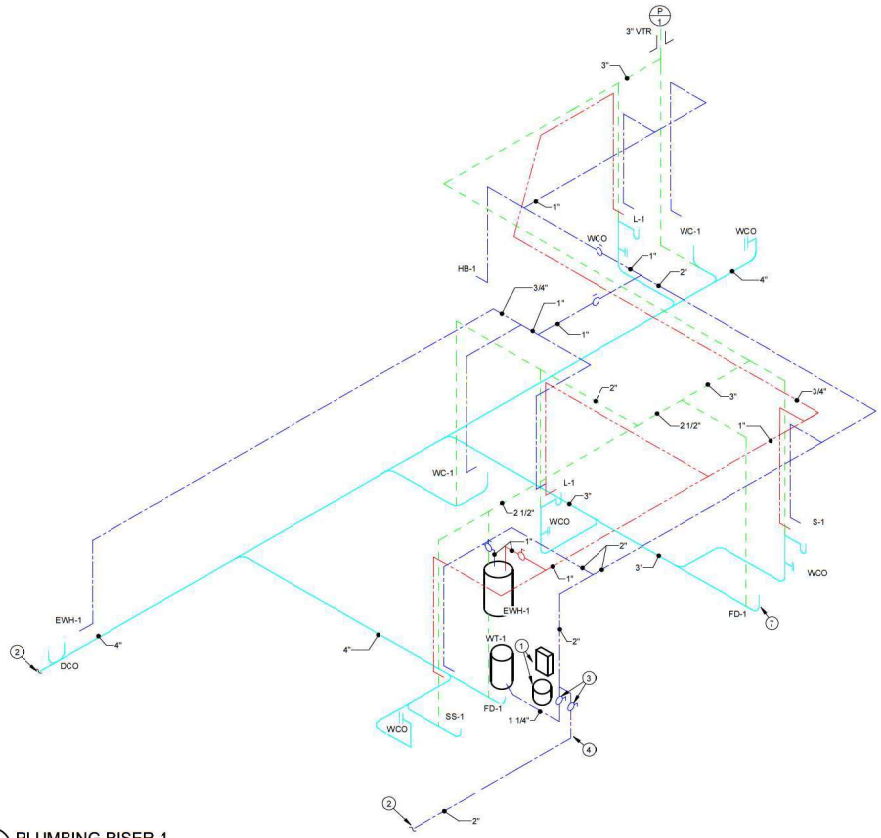

P-1 PLUMBING RISER 1
SCHEMATIC ONLY

KEY NOTES

AS INDICATED BY: (#)

1 NEW RO SYSTEM TO SUPPLY ICE MACHINE AND S-1. S-1 SHALL HAVE RO MANUFACTURER PROVIDED SPOUT.
2 REFER TO CIVIL FOR CONTINUATION OF LINES.
3 ADD 2" BALL VALVE IN VERTICAL. SEE P-111 P1 FOR DETAIL.
4 TURN LINE UP INTO MECHJAN 114.
5 FLOOR DRAIN SHALL BE UNDER MILLWORK TO SERVICE UNDERCOUNTER ICE MAKER.

Parkhill

THIS DOCUMENT IS RELEASED ON DATE INDICATED FOR THE PURPOSE OF INTERIM REVIEW UNDER THE AUTHORITY OF BRADLEY BLOUNT LICENSE # 115111. IT IS NOT TO BE USED FOR REGULATORY APPROVAL, CONSTRUCTION, BIDDING OR PERMIT PURPOSES. PARKHILL, SMITH & COOPER, INC.

6/27/2023

Parkhill.com

Citizen Collection Stations

City of Midland

MIDLAND Fuel the Energy!

CLIENT
City of Midland

300 North Loraine
Midland, TX

PROJECT NO.
6119.21 - WEST
40015.22 - NORTH

#	DATE	DESCRIPTION
-	06/27/2023	City Council Review

Plumbing Risers

P-901

6/26/2023 8:56:33 AM

PACKET 6.458 July 11, 2023

6/5/2023 8:56:26 AM

GENERAL NOTES

1. GENERAL NOTES ON THIS SHEET ARE APPLICABLE TO EACH MECHANICAL DRAWING OF THIS SET OF CONSTRUCTION DOCUMENTS. NOTES SPECIFIC TO INDIVIDUAL MECHANICAL DRAWINGS WILL BE SHOWN ON THE RESPECTIVE MECHANICAL DRAWING.
2. THE CONTRACTOR SHALL PROVIDE A COMPLETE HVAC SYSTEM TO INCLUDE ALL LABOR, MATERIALS, TOOLS AND EQUIPMENT FOR A COMPLETE AND FUNCTIONAL SYSTEM INCLUDING ALL NECESSARY APPURTENANCES CUSTOMARILY INCLUDED IF NOT SPECIFICALLY CALLED OUT.
3. ENTIRE INSTALLATION, INCLUDING MATERIALS, EQUIPMENT AND WORKMANSHIP SHALL CONFORM WITH ALL APPLICABLE LAWS, CODES AND REGULATIONS.
4. THIS PROJECT SHALL CONFORM TO APPLICABLE ASHRAE, NFPA AND SMACNA STANDARDS AND OTHER REGULATORY BODIES HAVING JURISDICTION OVER THE CLASS OF WORK.
5. MATERIAL AND EQUIPMENT SHALL HAVE STAMPS OR SEALS OF AHRI, ASME, UL OR ASTM.
6. THE CONTRACTOR SHALL MAKE TESTS FOR ACCEPTANCE AND APPROVAL AS REQUIRED BY CODE AND THE REQUIREMENTS OF APPLICABLE REGULATORY AGENCIES. REQUIRED TESTS SHALL BE PERFORMED IN THE PRESENCE OF THE ENGINEER OF RECORD AND/OR OWNER UNLESS OTHERWISE WAIVED IN WRITING.
7. THE CONTRACTOR SHALL OBTAIN AND PAY FOR ALL PERMITS, LICENSES, DOCUMENTS AND SERVICES RELATED TO INSTALLATION OF THE WORK.
8. THE CONTRACTOR SHALL COORDINATE HIS WORK WITH THE OTHER TRADES IN ORDER TO RESOLVE ANY CONFLICTS THAT MIGHT ARISE DUE TO THE LOCATION OF EQUIPMENT OR THE USE OF SPACE.
9. EQUIPMENT OF DIFFERENT ELECTRICAL CHARACTERISTICS MAY BE FURNISHED PROVIDED SUCH PROPOSED EQUIPMENT IS APPROVED IN WRITING AND CONNECTING ELECTRICAL SERVICE, CIRCUIT BREAKERS AND CONDUIT ARE APPROPRIATELY MODIFIED AT NO COST TO THE OWNER.
10. RUN ALL HORIZONTAL PIPING AND DUCTWORK ABOVE THE CEILING UNLESS OTHERWISE NOTED.
11. MAKE DUCT PENETRATIONS OF ALL WALLS WITH SHEET METAL DUCTS. FLEXIBLE DUCT PENETRATION OF WALLS ARE NOT ACCEPTABLE.
12. INSTALL TURNING VANES WHERE SHOWN ON PLANS.
13. DO NOT INSTALL EQUIPMENT, PIPING OR DUCTWORK OVER ANY ELECTRICAL EQUIPMENT OR ELECTRICAL SERVICE SPACE.
14. LAYOUT OF PIPING AND DUCTWORK IS DIAGRAMMATIC. RUN ALL EXPOSED PIPING AND DUCTWORK AS HIGH AS POSSIBLE UNLESS OTHERWISE NOTED. ALLOW FOR RISES, DROPS AND OFFSETS AS REQUIRED.
15. INSTALL MECHANICAL EQUIPMENT TO FACILITATE SERVICING, MAINTENANCE AND REPAIR OR REPLACEMENT OF ELECTRICAL COMPONENTS. AS MUCH AS PRACTICAL, CONNECT EQUIPMENT FOR EASE OF DISCONNECTING, WITH A MINIMUM OF INTERFERENCE WITH OTHER INSTALLATIONS. PIPING SHALL NOT INTERFERE WITH FILTER PULL.
16. MECHANICAL CONTRACTORS SHALL PROVIDE AUTOMATIC CONTROL DEVICES SUCH AS STARTERS, VARIABLE FREQUENCY DRIVES (VFD), TEMPERATURE SENSORS, RELAYS, AND PRESSURE SWITCHES THAT ARE ASSOCIATED WITH MECHANICAL EQUIPMENT AND ASSOCIATED CONTROL WIRING FROM CONTROL POWER LOCATION TO THE CONTROL DEVICE. ELECTRICAL CONTRACTOR SHALL PROVIDE CONDUIT AND WIRING FROM POWER SOURCE TO DISCONNECT SWITCH, FROM DISCONNECT SWITCH TO STARTER OR VFD, AND FROM STARTER OR VFD TO THE EQUIPMENT.
17. FLASHING DETAILS FOR PIPES PENETRATING THE ROOF SHALL BE COORDINATED WITH ARCHITECTURE DETAILS.
18. LOCATE TEMPERATURE SENSORS AND CO2 SENSORS 48" ABOVE FINISHED FLOOR OR AS NOTED ON PLANS.
19. COORDINATE CURBS AND SIZE OF CURBS IN ACCORDANCE WITH ACTUAL EQUIPMENT PURCHASED.
20. CONTRACTOR IS TO PROVIDE AN ADJUSTABLE ROOF CURB OR TAPER AT CURB TO MATCH ROOF SLOPE FOR CURB MOUNTED EQUIPMENT. THE USE OF SHIMS TO LEVEL EQUIPMENT IS NOT ACCEPTABLE UNLESS THE CURB DIMENSIONS ARE SMALLER THAN 36"x36".
21. CONTRACTOR TO VERIFY ALL ACCESS PANEL LOCATIONS. NOT ALL ACCESS PANELS REQUIRED ARE SHOWN. REFER TO SPECIFICATIONS FOR ACCESS PANEL REQUIREMENTS.
22. CONTRACTOR SHALL INSTALL ALL PLUMBING VENTS AND EXHAUST AIR OUTLETS A MINIMUM OF 10-0" AWAY (PER CODE) FROM ALL OUTSIDE AIR INTAKES, OPERABLE DOORS AND/ OR WINDOWS. CONSTRUCTION DRAWINGS ARE DIAGRAMMATIC BY NATURE, FINAL MEASUREMENTS SHOULD BE MADE AT THE PROJECT SITE.
23. NOT ALL SYMBOLS OR ABBREVIATIONS ARE USED.

SYMBOL LEGEND

- AUTOMATIC AIR VENT
- MANUAL AIR VENT
- P/T PLUG
- VENTURI FLOW METER
- AUTOMATIC FLOW CONTROL
- BUTTERFLY VALVE
- BALL VALVE
- CHECK VALVE
- GLOBE VALVE
- GATE VALVE
- ANGLE GATE VALVE
- PRESSURE REDUCING VALVE
- AUTOMATIC VALVE, 2-WAY
- AUTOMATIC VALVE, 3-WAY
- FLANGE
- UNION
- STRAINER
- GAS METER
- AUTOMATIC AIR VENT
- ELECTRIC MOTOR
- CENTRIFUGAL FAN
- THERMOMETER
- EXPANSION VALVE
- FLOW SWITCH
- PRESSURE SWITCH
- PUMP

PIPING SYMBOLS

- —CHS— CHILLED WATER SUPPLY
- —CHR— CHILLED WATER RETURN
- —HWS— HEATING WATER SUPPLY
- —HWR— HEATING WATER RETURN
- —CS— CONDENSING WATER SUPPLY
- —CR— CONDENSING WATER RETURN
- —CD— CONDENSATE DRAIN
- —R— REFRIGERANT LIQUID & SUCTION
- FLUID FLOW DIRECTION
- PIPE TURNED UP
- PIPE TURNED DOWN

PROJECT DESIGN INFORMATION

HVAC DATA		
PROJECT LOCATION:		MIDLAND, TX
DESIGN CODE:		IMC - 2015/IECC - 2015
ELEVATION (FT):		2803
HVAC DESIGN CONDITIONS		
	WINTER OUTDOOR (DB/WB):	22.8°F/20.5°F
	WINTER INDOOR (DB/WB):	70°F/62.0°F
	SUMMER OUTDOOR (DB/WB):	102.6°F/66.7°F
	SUMMER INDOOR (DB/WB):	75°F/63.5°F
	INDOOR RELATIVE HUMIDITY:	50%
	DEHUMIDIFICATION OUTDOOR (DB/WB):	77.0°F/71.2°F
ELECTRICAL SERVICE:		240V/1PH
PLUMBING DATA		
DESIGN CODE		IPC - 2015
WATER REQUIREMENTS		
	TOTAL WATER FIXTURE COUNT:	38
	TOTAL WATER GPM:	48
SEWER REQUIREMENTS		
	TOTAL SEWER FIXTURE COUNT:	28
	TOTAL SEWER GPM:	14.5

MECHANICAL/PLUMBING ABBREVIATIONS

A/C	AIR CONDITIONING
AVG	AVERAGE
AFF	ABOVE FINISHED FLOOR
BOJ	BOTTOM OF JOIST
BTUH	BRITISH THERMAL UNIT PER HOUR
MBU	BRITISH THERMAL UNIT DIVIDED BY 1,000
CFM	CUBIC FEET PER MINUTE
CHR	CHILLED WATER RETURN PIPING
CHS	CHILLED WATER SUPPLY PIPING
CR	CONDENSING WATER RETURN PIPING
CS	CONDENSING WATER SUPPLY PIPING
DEG	DEGREE
°F	DEGREES FAHRENHEIT
DIA	DIAMETER
ID	DIAMETER, INSIDE
OD	DIAMETER, OUTSIDE
DDC	DIRECT DIGITAL CONTROLS
DB	DRY BULB TEMPERATURE
EER	ENERGY EFFICIENCY RATIO
EAT	ENTERING AIR TEMPERATURE
EWT	ENTERING WATER TEMPERATURE
EA	EXHAUST AIR
ET	EXPANSION TANK
ESP	EXTERNAL STATIC PRESSURE
FT	FEET
FPI	FINS PER INCH
FD	FIRE DAMPER
FSD	FIRE/SMOKE DAMPER
FO	FLAT OVAL
GAL	GALLONS
GPD	GALLONS PER DAY
GPH	GALLONS PER HOUR
GPM	GALLONS PER MINUTE
GBD	GRAVITY BACKDRAFT DAMPER
HWP	HEATING WATER PUMP
HWR	HEATING WATER RETURN PIPING
HWS	HEATING WATER SUPPLY PIPING
HP	HORSEPOWER
HUM	HUMIDITY
IN	INCHES
inHG	INCHES OF MERCURY
inH20	INCHES OF WATER
IAQ	INDOOR AIR QUALITY
kW	KILOWATT
LAT	LEAVING AIR TEMPERATURES
LWT	LEAVING WATER TEMPERATURES
MBD	MANUAL BALANCING DAMPER
MAT	MIXED AIR TEMPERATURE
NC	NORMALLY CLOSED
NO	NORMALLY OPEN
OA	OUTSIDE AIR
OAT	OUTSIDE AIR TEMPERATURE
PH	PHASE
LBS	POUNDS
LBS/HR	POUNDS PER HOUR
PSI	POUNDS PER SQUARE INCH
PRV	PRESSURE REDUCED VALVE
RL	REFRIGERANT LIQUID
RS	REFRIGERANT SUCTION
RPZ	REDUCED PRESSURE BACKFLOW PREVENTER ASSEMBLY
RH	RELATIVE HUMIDITY
RA	RELIEF AIR
RPM	REVOLUTIONS PER MINUTE
SEER	SEASONAL ENERGY EFFICIENCY RATIO
SH	SENSIBLE HEAT
SHR	SENSIBLE HEAT RATIO
SD	SMOKE DAMPER
SQ.FT.	SQUARE FEET
SP	STATIC PRESSURE
T&P	TEMPERATURE AND PRESSURE VALVE
k	THERMAL CONDUCTIVITY
R	THERMAL RESISTANCE
TOJ	TOP OF JOIST
TDH	TOTAL DYNAMIC HEAD
TSP	TOTAL STATIC PRESSURE
UF	UNDERFLOOR
UG	UNDERGROUND
U	U-FACTOR, HEAT TRANSFER COEFFICIENT
VAV	VARIABLE AIR VOLUME
VFD	VARIABLE FREQUENCY DRIVE
VEL	VELOCITY
V	VOLTS
WB	WET BULB TEMPERATURE

DUCTWORK SYMBOLS

- MANUAL BALANCING DAMPER
- CEILING MOUNTED SUPPLY GRILLE
- CEILING MOUNTED RETURN GRILLE
- CEILING MOUNTED EXHAUST GRILLE
- WALL MOUNTED SUPPLY GRILLE
- WALL MOUNTED RETURN/EXHAUST GRILLE
- FIRE/SMOKE DAMPER
- FIRE DAMPER
- SMOKE DAMPER
- LINED RETURN DUCT
- SUPPLY DUCT TURNED UP
- SUPPLY DUCT TURNED DOWN
- RETURN DUCT TURNED UP
- RETURN DUCT TURNED DOWN
- EXHAUST DUCT TURNED UP
- EXHAUST DUCT TURNED DOWN
- ROUND DUCT TURNED UP
- ROUND DUCT TURNED DOWN
- THERMOSTAT
- HUMIDISTAT
- SENSOR
- FLEXIBLE CONNECTON
- FLEX DUCT
- CONNECT TO EXISTING
- POINT OF DISCONNECT (P.O.D)

Parkhill

THIS DOCUMENT IS RELEASED ON DATE INDICATED FOR THE PURPOSE OF INTERIM REVIEW UNDER THE AUTHORITY OF BRADLEY BLOUNT LICENSE # 115111. IT IS NOT TO BE USED FOR REGULATORY APPROVAL, CONSTRUCTION, BIDDING OR PERMIT PURPOSES. PARKHILL, SMITH & COOPER, INC.

6/27/2023

Parkhill.com

Citizen Collection Stations

City of Midland

MIDLAND Full the Energy!

CLIENT
City of Midland

300 North Loraine
Midland, TX

PROJECT NO.
6119.21 - WEST
40015.22 - NORTH

#	DATE	DESCRIPTION
-	06/27/2023	City Council Review

Mechanical Abbreviations & Legends

M-001

PACKET 6.459 July 11, 2023

GENERAL NOTES

A. REFER TO GENERAL NOTES ON M-001.
B. ALL NFORMATION SHOWN APPLIES TO 2 DIFFERENT BUILD NGS.

KEY NOTES

AS INDICATED BY: (#)

1 PROV DE 8" EXHAUST CAP 17'6" ABOVE GROUND.
2 UP THRU MEZZANINE FLOOR TO CEILING SPACE. SEE M-111 A1 FOR CONT NUATION.
3 CENTER OF LOUVER AT 3' 0" ABOVE FINISHED FLOOR.
4 DOWN THRU MEZZANINE FLOOR TO CEILING SPACE. SEE M-111 A3 FOR CONT NUATION.
5 BOTTOM OF UNIT HEATER S-ALL BE AT 12' 0" ABOVE FINISHED FLOOR.
6 CENTER OF FAN AT 4' 0" ABOVE MEZZANINE FINISHED FLOOR.
7 PROV DE LABELED WALL SWITCH TO OPERATE EF-2. L-1 SHALL OPEN WHEN EF-2 IS RUNNING. COORDINATE LOUVER INTERLOCK WITH ELECTRICAL CONTRACTOR.
8 PROV DE 8" SUPPLY CAP 14'9" ABOVE GROUND.
9 HEAT PUMP TO BE MOUNTED ON CONCRETE EQUIPMENT PAD. REFER TO MANUFACTURER FOR DETAIL.
10 MOUNT 8"x8" SIDEWALL GRILL 10'6" A.F.F.
11 BC-1 S-HALL BE INSTALLED ON MEZZANINE FINISHED FLOOR.

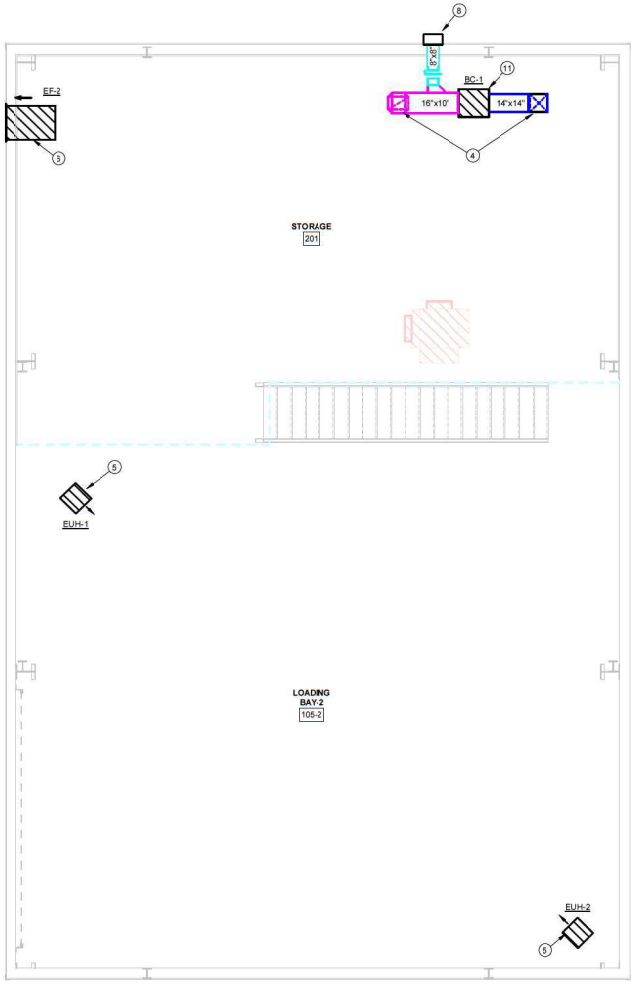

A1 MECHANICAL PLAN - MEZZANINE
1/4" = 1'-0"

WEST SITE PLAN NORTH NORTH SITE PLAN NORTH

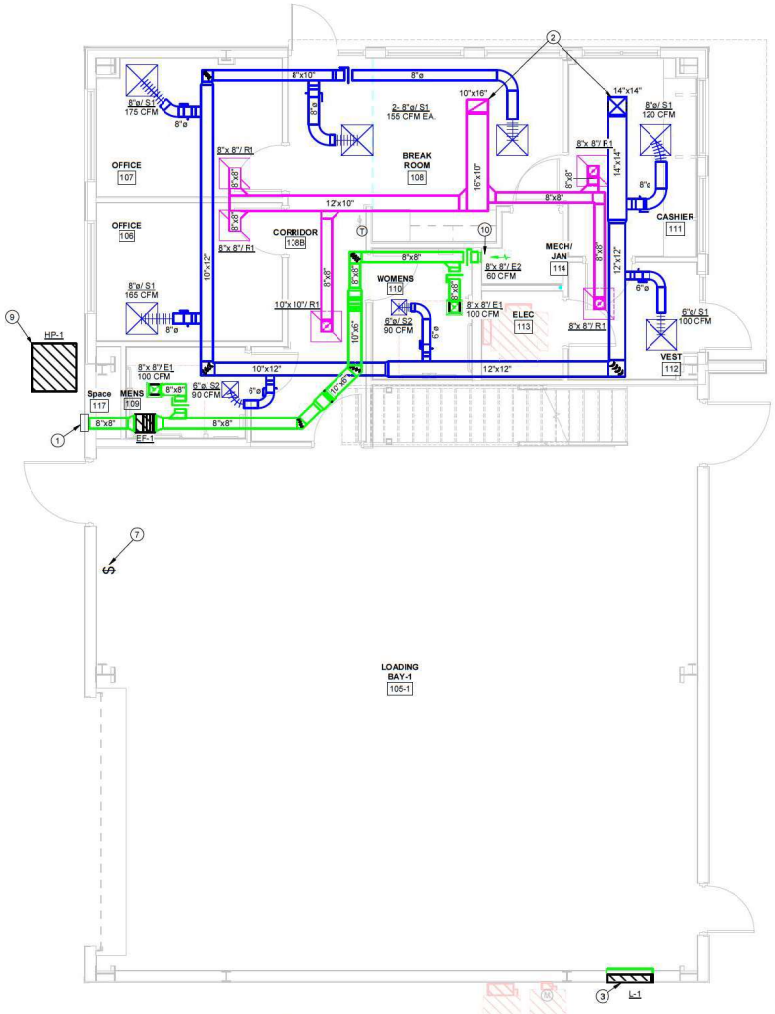

A3 MECHANICAL PLAN - FIRST FLOOR
1/4" = 1'-0"

WEST SITE PLAN NORTH NORTH SITE PLAN NORTH

Parkhill

THIS DOCUMENT IS RELEASED ON DATE INDICATED FOR THE PURPOSE OF INTERIM RE/IEW UNDER THE AUTHORITY OF BRADLEY BLOUNT LICENSE # 115111. IT IS NOT TO BE USED FOR REGULATORY APPROVAL, CONSTRUCTION, BIDDING OR PERMIT PURPOSES. PARKHILL, SMITH & COOPER, INC.

6/27/2023

Parkhill.com

Citizen Collection Stations
City of Midland

MIDLAND Fuel the Energy!

CLIENT
City of Midland

300 North Loraine
Midland, TX

PROJECT NO.
6119.21 - WEST
40015.22 - NORTH

#	DATE	DESCRIPTION
-	06/27/2023	City Council Review

Mechanical Plan
M-111

6/26/2023 8:56:27 AM

PACKET 6.460 July 11, 2023

BLOWER COIL SCHEDULE

SYMBOL	TYPE	EXTERNAL S.P. (in W.G.)	BLOWER MOTOR HP/ DRIVE	TOTAL CFM	OUTSIDE AIR CFM	COOLING					HEATING			ELECTRICAL				WEIGHT, LBS	MANUFACTURER	INDOOR UNIT MODEL NUMBER
						MINIMUM TOTAL CAPACITY, MBH	MINIMUM SENSIBLE CAPACITY, MBH	ENTERING MIXED AIR TEMPERATURE, DB / WB, F	MINIMUM COOLING SEER	OUTDOOR AMBIENT TEMPERATURE, F	MINIMUM TOTAL CAPACITY AT 47F, MBH	MIXED ENTERING AIR TEMPERATURE, F	MINIMUM EFFICIENCY, HSPF	VOLTAGE	PHASE	MCA	MOCP			
BC-1	UNITARY SPLIT SYSTEM	0.53	0.5	1050 CFM	150	34.1	24.2	78.5/63.62	14.00	102	32.4	63.53	3.2	230 V	1	5	15	155 lb	TRANE	TEM6A0C

HEAT PUMP SPLIT SYSTEM SCHEDULE

SYMBOL	SERVES	ELECTRICAL				TYPE OF REFRIGERANT	MANUFACTURER	MODEL NO.
		VOLTAGE	PHASE	MCA	MOCP			
HP-1	BC-1	230 V	1	18	30	R410	TRANE	4TWR4036

NOTES:
1. SCHEDULED UNITS ARE MANUFACTURED BY TRANE. CARRIER AND LENNOX ARE CONSIDERED EQUIVALENT.
2. EXTERNAL STATIC PRESSURE INCLUDES DUCTWORK, DAMPERS, AND AIR DEVICES. PRESSURE DROP FOR WET COIL AND FILTERS IS CONSIDERED AS INTERNAL PRESSURE DROP.
3. COOLING CAPACITIES AND SEER/EER RATINGS ARE COMBINATION RATINGS WITH OUTDOOR UNITS. CAPACITIES ARE RATED AT ENTERING AIR TEMPERATURE AND AMBIENT AS LISTED; SEER RATINGS ARE AT AHRI CONDITIONS. AIRFLOW CONDITIONS ARE RATED AT LOCAL ALTITUDE.
4. EACH OUTDOOR UNIT SHALL BE EQUIPPED WITH A HIGH PRESSURE SWITCH, HARD START KIT ON SINGLE PHASE UNIT, ANTI-SHORT CYCLE TIMER, SERVICE VALVES AND INDOOR BLOWER RELAY KIT.
5. ELECTRICAL CONTRACTOR IS TO PROVIDE AND INSTALL ALL DISCONNECTS FOR EACH DEVICE IN THE SPLIT SYSTEM PACKAGE. ELECTRICAL CONTRACTOR IS TO MAKE ALL CONNECTS AS PER DIVISION 16 SPECIFICATIONS.
6. EACH SYSTEM SHALL BE PROVIDED WITH AN ELECTRONIC PROGRAMMABLE NIGHT SETBACK THERMOSTAT WITH ONE STAGE OF COOLING AND 2 STAGES OF HEATING. MECHANICAL CONTRACTOR SHALL PROVIDE AND INSTALL THE THERMOSTAT AS PER DIVISION 16 SPECIFICATIONS FOR RUNNING WIRE AND CONDUIT.

COMBINATION LOUVER/DAMPER SCHEDULE

SYMBOL	SERVES	LOUVER FUNCTION	WIDTH	HEIGHT	MAX FACE VELOCITY	MIN FREE AREA	AIRFLOW	FRAME TYPE	ACTUATOR VOLTAGE	FAIL POSITION	BIRDSCREEN	INSECT SCREEN	MANUFACTURER	MODEL NO.
L-1	EF-2	INTAKE	36"	34"	750 FPM	2.70 FT^2	2035 CFM	CHANNEL	120 V	CLOSED	YES	NO	GREENHECK	EACC-601

NOTES:
1. UNITS ARE SCHEDULED TO BE MANUFACTURED BY GREENHECK. RUSKIN AND CESCO ARE CONSIDERED EQUIVALENT.
2. COORDINATE FRAME TYPE WITH ARCHITECT. COORDINATE EXACT SIZE WITH ARCHITECTURAL DETAILS AND CMU BLOCK OR BRICK DIMENSIONS.
3. COORDINATE LOUVER COLOR WITH ARCHITECT.
4. INTERLOCK LOUVER TO OPEN WHEN EF-2 IS OPERATED.

EXHAUST FAN SCHEDULE

SYMBOL	TYPE	CFM	DRIVE	E.S.P. (in W.G.)	SOUND LEVEL IN SONES	FAN MOTOR POWER - HP	NOMINAL FAN RPM	ELECTRICAL			WEIGHT, LBS	MANUFACTURER	MODEL NO
								VOLTAGE	PHASE	METHOD OF CONTROL			
EF-1	IN LINE	260 CFM	DIRECT	0.32	6.8	1/10	1485	115 V	1	NOTE 7	50	GREENHECK	SQ-80-VG
EF-2	SIDEWALL PROP	2035 CFM	DIRECT	0.3	13.9	1/2	997	115 V	1	SWITCH	186	GREENHECK	AER-24-VG

NOTES:
1. FANS ARE SCHEDULED TO BE MANUFACTURED BY GREENHECK. TWIN CITY AND COOK ARE CONSIDERED EQUIVALENT MANUFACTURERS.
2. AIRFLOW CONDITIONS RATED AT LOCAL ALTITUDE.
3. PROVIDE AND INSTALL FLEXIBLE CONNECTION ON FAN INLET DUCT CONNECTION.
4. FANS SHALL HAVE MOTOR VIBRATION ISOLATION, BACK DRAFT DAMPER AT UNIT AND LOCAL DISCONNECT SWITCH AT UNIT.
5. FAN SELECTIONS SHALL BE SUBMITTED TO ALLOW FOR A MINIMUM +/- 10% INSCHEDULED EXTERNAL STATIC AND CFM WITHIN THE PARAMETERS OF THE SCHEDULED MOTOR HP.
6. PROVIDE EF-2 WITH WALL COLLAR, 45° WEATHERHOOD WITH BIRDSCREEN, GRAVITY OPERATED DAMPER, AND INTERIOR WALL HOUSING WITH GAURD.
7. EF-1 SHALL BE CONTROLLED USING WALL MOUNTED OCCUPANCY SENSORS IN MENS 109 AND WOMENS 110. COORDINATE WITH ELECTRICAL CONTRACTOR.

AIR DISTRIBUTION SCHEDULE

SYMBOL	SYSTEM TYPE	DESCRIPTION	INSTALLATION TYPE	MANUFACTURER	MODEL NO.
S1	SUPPLY	ALL STEEL, 24" x 24" NOMINAL FACE, FIXED AIR PATTERN, STEPPED WITH 4-CONES, SQUARE FACE AND ROUND NECK. SIZE NECK AS SHOWN ON DRAWINGS.	LAY-IN/SURFACE MOUNT	NAILOR	RNS
S2	SUPPLY	ALL STEEL, 12" x 12" NOMINAL FACE, FIXED AIR PATTERN, STEPPED WITH 4-CONES, SQUARE FACE AND ROUND NECK. SIZE NECK AS SHOWN ON DRAWINGS.	LAY-IN/SURFACE MOUNT	NAILOR	RNS
R1	RETURN	EGGCRATE RETURN GRILLE, 24"x 24" NOMINAL FACE, STEEL BORDER WITH ALUMINUM 1/2"x1/2"x1/2" CORE. SIZE NECK AS SHOWN ON DRAWINGS.	LAY-IN/SURFACE MOUNT	NAILOR	61EC
E1	EXHAUST	EGGCRATE EXHAUST GRILLE, 12"x 12" NOMINAL FACE, ALL ALUMINUM 1/2" x 1/2" x 1/2" CORE. SIZE NECK AS SHOWN ON DRAWINGS.	LAY-IN/SURFACE MOUNT	NAILOR	51EC
E2	EXHAUST	ALUMINUM, SIDEWALL EXHAUST GRILLE WITH FIXED HORIZONTAL BLADES, 3/4" BLADE SPACING. SIZE NECK AS SHOWN ON DRAWINGS.	SIDEWALL	NAILOR	5145H

NOTES:
1. AIR DEVICES SCHEDULED TO BE MANUFACTURED BY NAILOR. PRICE, TITUS, AND RUSKIN ARE CONSIDERED EQUIVALENT MANUFACTURERS.
2. UNLESS SCHEDULED OTHERWISE, AIR DEVICES SHALL BE WHITE OR OFF-WHITE IN COLOR.
3. ALL JOISTS, CONDUITS, PIPING AND EQUIPMENT ABOVE OPEN RETURN DEVICES SHALL BE PAINTED BLACK FOR AN AREA OF 2 FEET ON ALL SIDES OF THE AIR DEVICE.
4. PROVIDE MANUAL BALANCING DAMPERS AT EACH SUPPLY AND EXHAUST AIR DUCT TAP. INSTALL MBD AT MAIN DUCT TAP.
5. PROVIDE INSULATING BLANKET ON BACK OF THE SUPPLY AND RETURN GRILLES.

ELECTRIC UNIT HEATER

SYMBOL	AIR FLOW	TEMP RISE F	MINIMUM INPUT, kW	VOLTAGE	PHASE	WEIGHT, LBS	MANUFACTURER	MODEL NO
EUH-1	510 CFM	18	3	240 V	1	45	REZNOR	EGHBAK3E
EUH-2	510 CFM	18	3	240 V	1	45	REZNOR	EGHBAK3E

NOTES:
1. UNITS ARE SCHEDULED TO BE MANUFACTURED BY REZNOR. INDECCO, MARKEL AND TRANE ARE CONSIDERED EQUIVALENT MANUFACTURERS. OTHERS BY PRIOR APPROVAL.
2. ELECTRICAL UNIT HEATER AS SCHEDULED SHALL HAVE BUILT-IN CONTROL TRANSFORMER, OVERHEAT PROTECTION, INTERNAL 24V THERMOSTAT, AND MOUNTING BRACKET. MOUNT THERMOSTAT TO BACK OF UNIT HEATER.
3. MANUFACTURER TO PROVIDE A LOCAL DISCONNECT THAT IS TO BE FIELD INSTALLED.

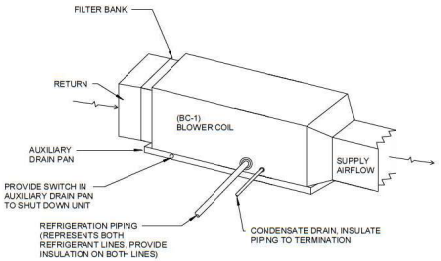

B2 BLOWER COIL DETAIL
NTS

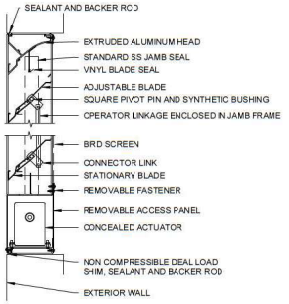

A2 LOUVER DAMPER DETAIL
NTS

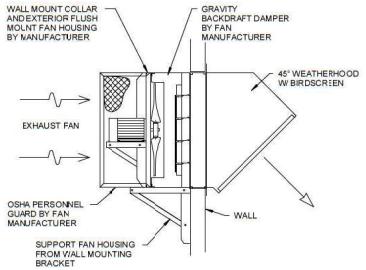

A3 EXHAUST PROP FAN WALL MOUNT DETAIL
NTS

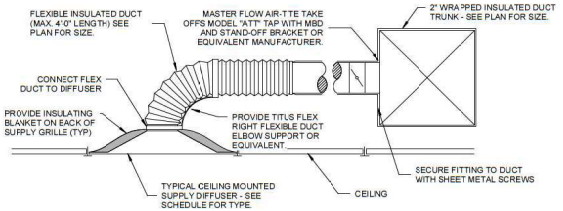

A4 SUPPLY AIR DIFFUSER MOUNTING FLEX
NTS

Parkhill

THIS DOCUMENT IS RELEASED ON DATE INDICATED FOR THE PURPOSE OF INTERIM REVIEW UNDER THE AUTHORITY OF BRADLEY BLOUNT LICENSE # 115111. IT IS NOT TO BE USED FOR REGULATORY APPROVAL, CONSTRUCTION, BIDDING OR PERMIT PURPOSES. PARKHILL, SMITH & COOPER, INC.

6/27/2023

Parkhill.com

Citizen Collection Stations

City of Midland

MIDLAND Fuel the Energy!

CLIENT
City of Midland

300 North Loraine
Midland, TX

PROJECT NO.
6119.21 - WEST
40015.22 - NORTH

#	DATE	DESCRIPTION
-	06/27/2023	City Council Review

Mechanical Schedules

M-601

6/26/2023 8:56:29 AM

ELECTRICAL ABBREVIATIONS

ABOVE COUNTER	AC	HORSEPOWER	HP
ABOVE FINISHED FLOOR	AFF		
ALARM	ALM	ILLUMINATION ENGINEERING SOCIETY OF NORTH AMERICA	IESNA
ALTERNATING CURRENT	AC	INTERMEDIATE METAL CONDUIT	IMC
AMERICAN NATIONAL STANDARDS INSTITUTE	ANSI		
AMERICAN STEEL WIRE GAUGE	ASWG	KILOVOLT	kV
AMERICAN WIRE GAUGE	AWG	KILOVOLT AMP	kVA
AMPERE	AMP	KILOWATT	kW
AMPERE INTERRUPTING CAPACITY	AIC	KILOWATT HOUR	kWH
AMPS SHORT CIRCUIT	ASC		
ARCHITECT	ARCH	LIQUIDTIGHT FLEXIBLE METAL CONDUIT	LFMC
AUDIO VISUAL	AV	LIQUIDTIGHT FLEXIBLE NONMETALLIC CONDUIT	LFNC
AUTHORITY HAVING JURISDICTION	AHJ		
AUTOMATIC TRANSFER SWITCH	ATS	MAIN CIRCUIT BREAKER	MCB
		MAIN LUGS ONLY	MLO
CLOSED CIRCUIT TELEVISION	CCTV	MINIMUM CIRCUIT AMPS	MCA
COAXIAL CABLE	COAX	MOTOR CONTROL CENTER	MCC
COLOR RENDERING INDEX	CRI		
COMMUNICATIONS	COMM	NATIONAL ELECTRICAL CODE	NEC
COPPER	CU	NATIONAL ELECTRICAL MANUFACTURERS ASSOCIATION	NEMA
CURRENT TRANSFORMER.	CT	NATIONAL FIRE CODE	NFC
		NATIONAL FIRE PROTECTION ASSOCIATION	NFPA
DECIBEL	dB	NORMALLY CLOSED	NC
DEMOLITION	DEMO	NORMALLY OPEN	NO
DIRECT CURRENT	DC	NOTIFICATION APPLIANCE CIRCUIT	NAC
DOUBLE POLE, DOUBLE THROW	DPDT		
DOUBLE POLE, SINGLE THROW	DPST	POLY VINYL CHLORIDE	PVC
		POWER FACTOR	PF
EACH	EA		
ELECTRIC	ELEC	RIGID GALVANIZED STEEL	RGS
ELECTRICAL METALLIC TUBING	EMT	RIGID NONMETALLIC CONDUIT	RNC
ELECTRICAL NONMETALLIC TUBING	ENT		
		SINGLE PHASE	1Ø
FIRE ALARM	FA	SINGLE POLE, DOUBLE THROW	SPDT
FIRE ALARM ANNUNCIATOR PANEL	FAAP	SINGLE POLE, SINGLE THROW	SPST
FIRE ALARM CONTROL PANEL	FACP	SWITCHBOARD	SWBD
FLEXIBLE METALLIC CONDUIT	FMC		
FOOTCANDLE	FC		
FULL LOAD AMPS	FLA	THREE PHASE	3Ø
GAUGE	GA		
GENERATOR	GEN	UNINTERRUPTIBLE POWER SUPPLY	UPS
GROUND	GND		
GROUND FAULT CIRCUIT INTERRUPTER	GFCI	VARIABLE FREQUENCY DRIVE	VFD
		VOLT, VOLTS, VOLTAGE	V
		VOLT AMPERE	VA
		WIRELESS ACCESS POINT	WAP
		WEATHERPROOF	WP

ELECTRICAL LEGEND

SYMBOL	DESCRIPTION
	2'x4' RECESSED LIGHT FIXTURE. UPPER CASE INDICATES TYPE IN SCHEDULE. LOWER CASE INDICATES SWITCH.
	2'x4' RECESSED LIGHT FIXTURE. DIAGONAL MARKING INDICATES EGRESS FIXTURE CONNECTED TO EMERGENCY POWER SUPPLY. UPPER CASE INDICATES TYPE IN SCHEDULE. LOWER CASE INDICATES SWITCH.
	EMERGENCY WALL PACK CONNECTED TO EMERGENCY LIGHTING POWER SUPPLY. UPPER CASE INDICATES TYPE IN SCHEDULE.
	SINGLE FACE EXIT SIGN AS SCHEDULED. CONNECTED TO EMERGENCY LIGHTING POWER SUPPLY. ARROWS INDICATE DIRECTIONAL ARROWS. PROVIDE SINGLE OR DOUBLE FACE AS REQUIRED OR INDICATED. UPPER CASE INDICATES TYPE IN SCHEDULE. "WG" INDICATES WIRE GUARD.
$	WALL SWITCH, REFER TO LIGHTING CONTROL MATRIX SCHEDULE FOR ALL CONTROL REQUIREMENTS.
	125V, 20A, 2P, 3W. GROUNDINGTYPE DUPLEX RECEPTACLE. "GFCI" DENOTES GROUND FAULT INTERRUPTER,"WP" DENOTES WEATHERPROOF COVER, "AC" DENOTES ABOVE COUNTER MOUNTING, "USB" DENOTES COMBINATION USB DEVICE.
	CONDUCTORS IN CONDUIT. MINIMUM NUMBER IS (2)#12 AWG + #12 GND. PROVIDE NUMBER OF CONDUCTORS AS REQUIRED FOR SWITCHING INDICATED AND CONTINUING CIRCUITS.
	SURFACE MOUNTED SINGLE SECTION PANELBOARD. LABEL INDICATES PANEL NAME. REFER TO PANEL SCHEDULE AND RISER DIAGRAM FOR ADDITIONAL INFORMATION.
	DATA OUTLET.
	WALL MOUNTED FIXTURE. UPPER CASE INDICATES TYPE IN SCHEDULE. LOWER CASE INDICATES SWITCH.
	DOUBLE FACE EXIT SIGN AS SCHEDULED. CONNECTED TO EMERGENCY LIGHTING POWER SUPPLY. ARROWS INDICATE DIRECTIONAL ARROWS. PROVIDE SINGLE OR DOUBLE FACE AS REQUIRED OR INDICATED. UPPER CASE INDICATES TYPE IN SCHEDULE. "WG" INDICATES WIRE GUARD.
	SEQUENCE OF OPERATION LIGHTING CONTROL DEVICE. REFER TO CONTROL MATRIX FOR ABBREVATIONS AND LIGHTING CONTROL INFORMATION.
LC	LIGHTING CONTACTOR.
J	JUNCTION BOX.
	HOMERUN TO PANELBOARD. REFER TO SPECIFICATIONS FOR LIMITING NUMBER OF CONDUCTORS PER HOMERUN.
	SURFACE MOUNTED COMMUNICATIONS TERMINAL BOARD.

Parkhill

THIS DOCUMENT IS RELEASED ON DATE INDICATED FOR THE PURPOSE OF INTERIM REVIEW UNDER THE AUTHORITY OF ISAAC N. AGUILAR LICENSE # 117619. IT IS NOT TO BE USED FOR REGULATORY APPROVAL, CONSTRUCTION, BIDDING OR PERMIT PURPOSES. PARKHILL, SMITH & COOPER, INC.

ELECTRICAL

06/27/2023

Parkhill.com

Citizen Collection Stations

City of Midland

MIDLAND Fuel the Energy!

CLIENT
City of Midland

300 North Loraine
Midland, TX

PROJECT NO.
6119.21 - WEST
40015.22 - NORTH

#	DATE	DESCRIPTION
-	06/27/2023	City Council Review

Electrical Abbreviations & Legend

E-001

06/27/2023 10:48:32 AM

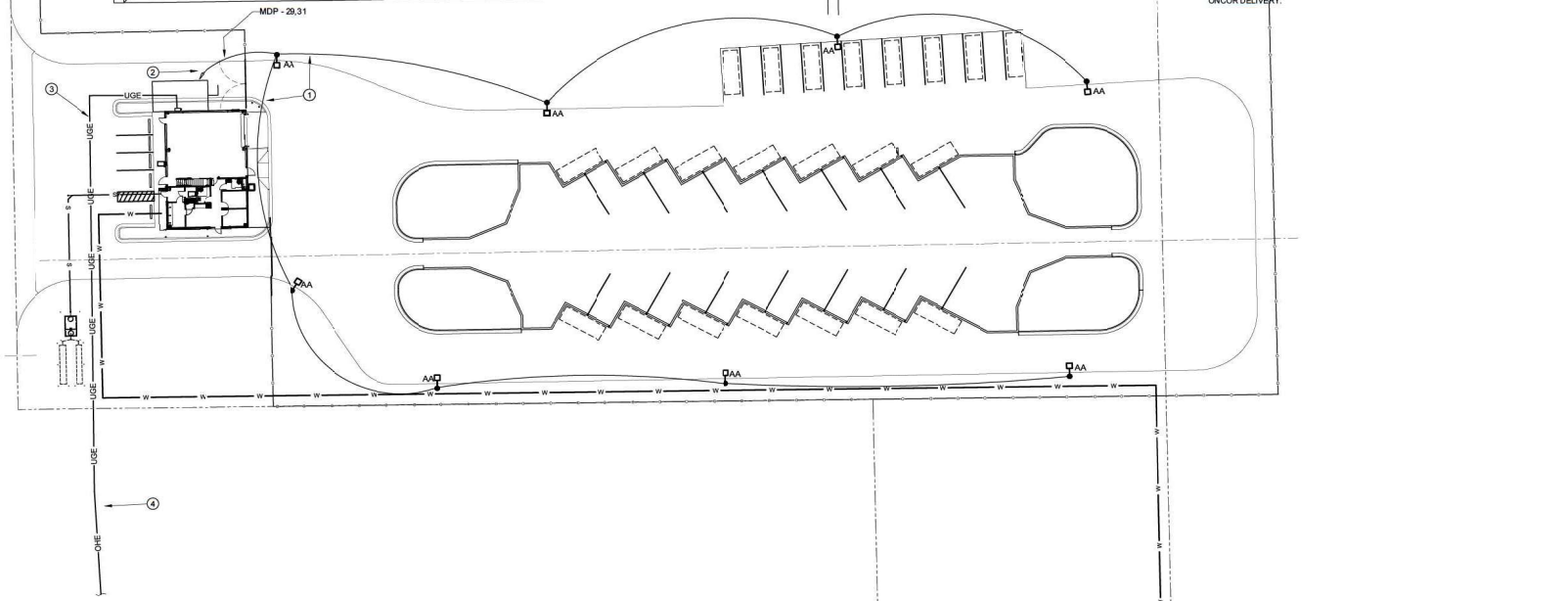

GENERAL NOTES

A. COORDINATE WITH THE UTILITY SERVICE PROVIDERS FOR ALL REQUIREMENTS FOR DELIVERING POWER SERVICE TO THE NEW BUILDING.
B. REFER TO THE LIGHT FIXTURE SCHEDULE FOR FIXTURE TYPES. PROVIDE THE NUMBER OF FIXTURES AND ORIENTATION NOTED FOR POLE-MOUNTED FIXTURES. POLE EPA RATINGS SHALL BE FOR THE NUMBER OF FIXTURES SHOWN.
C. CONTRACTOR SHALL VERIFY LOCATION OF ALL UNDERGROUND UTILITIES PRIOR TO ANY EARTH WORK.

KEY NOTES

AS INDICATED BY: (XX)

1. PROVIDE (2)#8 AWG + #8 GND IN 3/4" CONDUIT
2. EXTEND AND CONNECT TO LIGHTING CONTROL RELAY PANEL LOCATED IN ELECTRICAL ROOM 113.
3. NEW UNDERGROUND SECONDARY SERVICE ROUTED FROM OVERHEAD POLE MOUNTED TRANSFORMER. PROVIDE TRENCH, CONDUIT AND BACKFILL. CONTRACTOR SHALL COORDINATE ALL REQUIREMENTS WITH ONCOR ELECTRIC DELIVERY. REFER TO ELECTRICAL RISER DIAGRAM ON SHEET E-501 FOR ADDITIONAL INFORMATION.
4. POLE MOUNTED TRANSFORMERS AND OVERHEAD TO UNDERGROUND TRANSITION BY ONCOR DELIVERY.

SITE LIGHTING FIXTURE SCHEDULE

TYPE	MOUNTING	VOLTAGE	MODEL NUMBER	LAMPS	REMARKS
AA	POLE	240V	DSX-LED-P7-40K-80CRI-T2M-MVOLT-RPA-DBLXD RTS-25-5-9B-DM19AS-DBLXD	LED	AREA LED POLE MOUNTED FIXTURE WITH 20000 LUMEN OUTPUT, 40K COLOR TEMPERATURE, WITH TYPE T2M DISTRIBUTION AND BLACK FINISH. PROVIDE 25 FOOT ROUND TAPERED STEEL POLE WITH MATCHING FINISH.

NOTES:

1 Electrical Site Plan - North Site
1" = 30'

0 30' 60'

N

THIS DOCUMENT IS RELEASED ON 06/27/23 FOR THE PURPOSE OF INTERIM REVIEW UNDER THE AUTHORITY OF ISAAC N. AGUIIAR, P.E., TEXAS LICENSE #117619. IT IS NOT TO BE USED FOR REGULATORY APPROVAL, CONSTRUCTION, BIDDING OR PERMIT PURPOSES.
PARKHILL SMITH & COOPER, INC. F-560

Parkhill

Parkhill.com

Citizen Collection Stations
City Of Midland

MIDLAND
Fuel the Energy!

CLIENT
City of Midland, Texas

300 N. Loraine
Midland, TX

PROJECT NO.
6119.21 - WEST
40015.22 - NORTH

#	DATE	DESCRIPTION
-	06/27/2023	City Council Review

Electrical
Site Plan
-North Site

E-100

FILE NAME: C:\Users\mjimenez\appdata\local\temp\AcPublish_16\20\E-100-6119 siteplan north.dwg LAYOUT NAME: E-110 PRINTED: Monday, June 26, 2023 - 1:45pm USER: mjimenez

PACKET

6.463

July 11, 2023

SITE LIGHTING FIXTURE SCHEDULE

TYPE	MOUNTING	VOLTAGE	MODEL NUMBER	LAMPS	REMARKS
AA	POLE	240V	DSX-LED-P7-40K-80CRI-T2M-MVOLT-RPA-DBLXD RTS-25-5-9B-DM19AS-DBLXD	LED	AREA LED POLE MOUNTED FIXTURE WITH 20000 LUMEN OUTPUT, 40K COLOR TEMPERATURE, WITH TYPE "2M DISTRIBUTION AND BLACK FINISH. PROVIDE 25 FOOT ROUND TAPERED STEEL POLE WITH MATCHING FINISH.

NOTES:

GENERAL NOTES

A. COORDINATE WITH THE UTILITY SERVICE PROVIDERS FOR ALL REQUIREMENTS FOR DELIVERING POWER SERVICE TO THE NEW BUILDING.
B. REFER TO THE LIGHT FIXTURE SCHEDULE FOR FIXTURE TYPES. PROVIDE THE NUMBER OF FIXTURES AND ORIENTATION NOTED FOR POLE-MOUNTED FIXTURES. POLE EPA RATINGS SHALL BE FOR THE NUMBER OF FIXTURES SHOWN.
C. CONTRACTOR SHALL VERIFY LOCATION OF ALL UNDERGROUND UTILITIES PRIOR TO ANY EARTH WORK.

KEY NOTES

AS INDICATED BY: (XX)

1. PROVIDE (2)#8 AWG + #8 GND.
2. EXTEND AND CONNECT TO LIGHTING CONTROL RELAY PANEL LOCATED IN ELECTRICAL ROOM 115.
3. NEW UNDERGROUND SECONDARY SERVICE ROUTEED FROM OVERHEAD POLE MOUNTED TRANSFORMER. PROVIDE TRENCH, CONDUIT AND BACKFILL. CONTRACTOR SHALL COORDINATE ALL REQUIREMENTS WITH ONCOR ELECTRIC DELIVERY. REFER TO ELECTRICAL RISER DIAGRAM ON SHEET E-501 FOR ADDITIONAL INFORMATION.

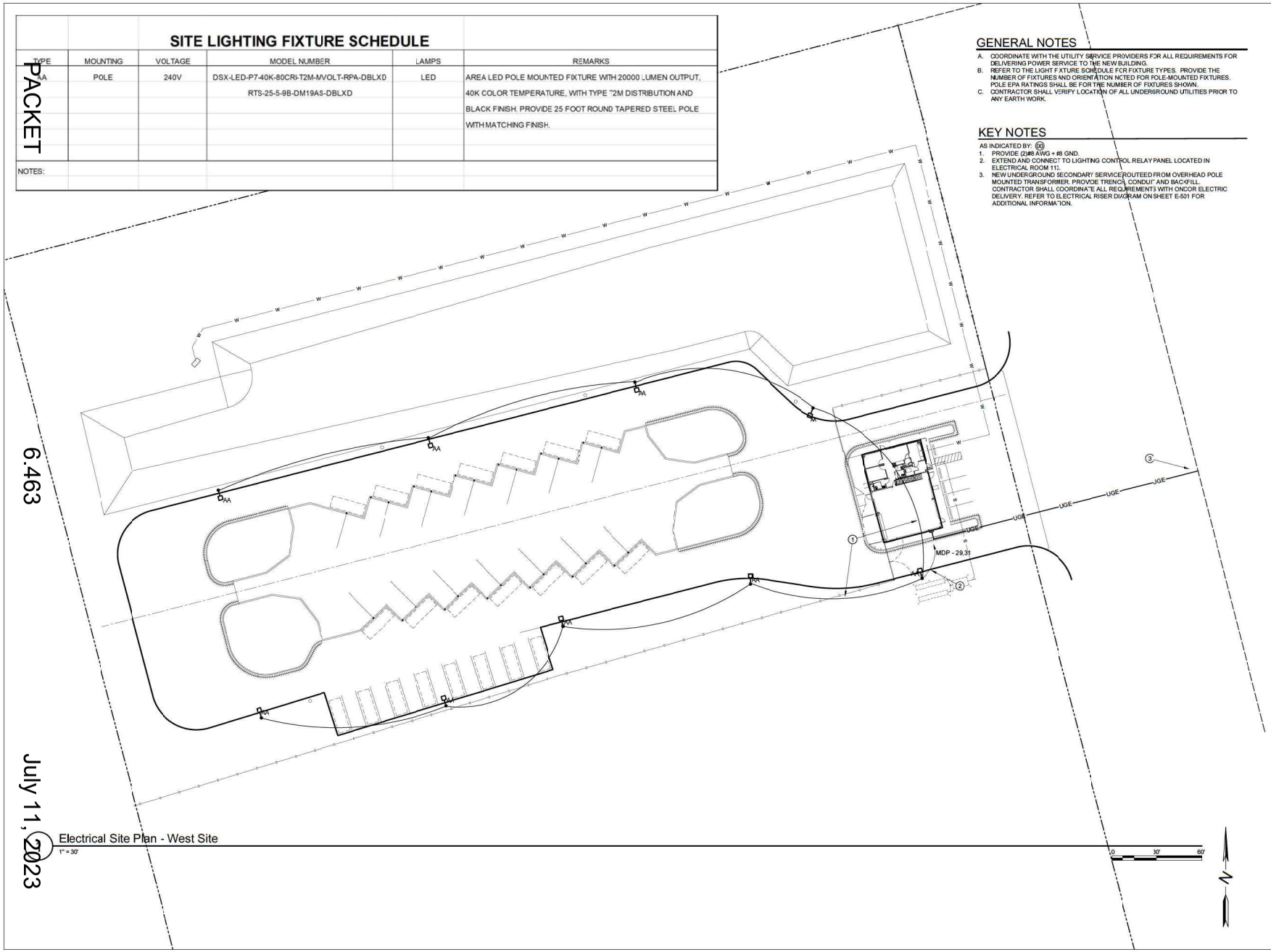

Electrical Site Plan - West Site
1" = 30'

Parkhill

THIS DOCUMENT IS RELEASED ON 06/27/23 FOR THE PURPOSE OF INTERIM REVIEW UNDER THE AUTHORITY OF ISAAC N. AGUILAR, P.E., TEXAS LICENSE #117619. IT IS NOT TO BE USED FOR REGULATORY APPROVAL, CONSTRUCTION, BIDDING OR PERMIT PURPOSES.
PARKHILL SMITH & COOPER, INC. F-560

Parkhill.com

Citizen Collection Stations
City Of Midland

MIDLAND
Feel the Energy!

CLIENT
City of Midland, Texas

300 N. Loraine
Midland, TX

PROJECT NO.
6119.21 - WEST
40015.22 - NORTH

#	DATE	DESCRIPTION
-	06/27/2023	City Council Review

Electrical Site Plan -West Site

E-100

FILE NAME: C:\Users\mjimenez\appdata\local\temp\AcPublish_16\20\E-100-6119 - West.dwg LAYOUT NAME: E-110 PRINTED: Monday, June 26, 2023 - 1:47pm USER: mjimenez

PACKET

6.464

July 11, 2023

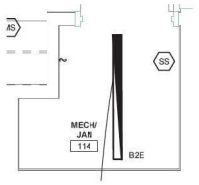

4 Lighting Plan - Callout 2
1/2" = 1'-0"



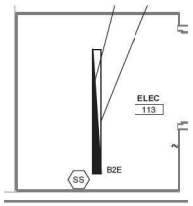

3 Lighting Plan - Callout 1
1/2" = 1'-0"



GENERAL NOTES

A. COORDINATE LOCATION OF LIGHT FIXTURES WITH ARCHITECTURAL AND MECHANICAL.
B. ALL EMERGENCY AND EGRESS LIGHTING SHALL BE CONNECTED TO THE SAME BRANCH CIRCUIT SERVING THE NORMAL LIGHTS AND SHALL BE ON THE LINE SIDE OF RELAYS OR SWITCHING DEVICES.
C. REFER TO KEYED NOTES FOR CONTROL OF ADDITIONAL EMERGENCY LIGHTING. ALL EXIT SIGNS SHALL BE CONNECTED FOR CONTINUOUS OPERATION.
D. AT LOCATIONS WHERE ROOM LIGHT FIXTURES ARE CONTROLLED THROUGH THE USE OF OCCUPANCY SENSORS, PROVIDE THE NUMBER OF SENSORS AND LOCATE THE UNITS AS REQUIRED FOR COMPLETE ROOM COVERAGE. WHERE MORE THAN ONE SENSOR IS LOCATED IN A COMMON SPACE, CONNECT THE UNITS SUCH THAT DETECTION OF OCCUPANCY FROM EITHER UNIT WILL ENERGIZE THE LIGHTING. WHERE SWITCHES ARE SHOWN IN CONJUNCTION WITH OCCUPANCY SENSORS, CONNECT THE SWITCHES TO DE-ENERGIZE THE LIGHTING INDICATED REGARDLESS OF OCCUPANCY. ADJUST ALL SENSOR TIME DELAYS AND MOTION SENSITIVITIES DURING PROJECT CLOSEOUT TO MEET THE OPERATIONAL FUNCTION OF THE OWNER.
E. EXACT LOCATION AND PLACEMENT OF EXIT LIGHTING SHALL BE FIELD DETERMINED TO ENSURE PROPER LINES OF SIGHT.
F. PROVIDE DEDICATED NEUTRAL WIRE FOR ALL 120V BRANCH CIRCUITS. NO MULTI-WIRE BRANCH CIRCUITS SHALL BE ALLOWED.
G. ELECTRICAL FLOOR PLANS AND SCHEDULES ARE VALID FOR BOTH WEST AND NORTH SITES.

KEY NOTES

AS INDICATED BY: (#)

1. MOUNT FIXTURE AT 18' 0" AFF. TYPICAL OF ALL FIXTURES TYPE "B1" AND "B1E".
2. MOUNT EXTERIOR WALL PACK AT 9' 4-1/2" AFF. COORDINATE EXACT MOUNTING HEIGHT WITH ARCHITECTUAL. EXTEND AND CONNECT TO LIGHTING CONTROL RELAY PANEL FOR CONTROL.
3. MOUNT FIXTURE AT 7' 5" AFF TO BASE OF FIXTURE. TYPICAL OF ALL FIXTURES TYPE "B3" AND "B3E".
4. MOUNT EXIT SIGN 1' 0" FROM THE TOP OF THE DOOR TO THE BOTTOM OF THE FIXTURE.
5. PROVIDE LIGHTING RELAY PANEL (LRP) : ARP-INTENC08-NLT-4FCR-MVCLT-HLK-SM-DTC-ARFA-APS-OL OR EQUIVALENT. LIGHTING RELAY PANEL TO CONTROL EXTERIOR WALL PACK LIGHTS AND PARKING LOT LIGHTS. COORDINATE WITH MANUFACTURER FOR FURTHER DETAILS.
6. SECOND FLOOR LIGHT FIXTURES B3 AND B3E SHALL BE CONTROLLED BY LIGHT FIXTURE SWITCH LOCATED ON 1ST FLOOR.

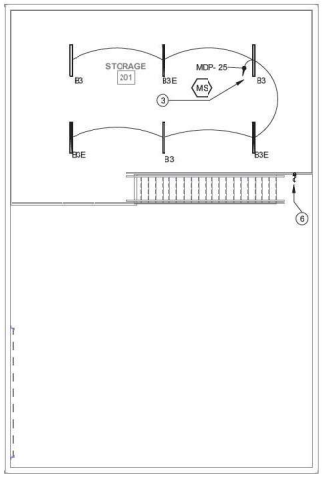

2 Lighting Plan - Mezzanine
1/8" = 1'-0"

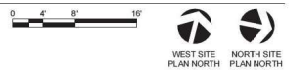

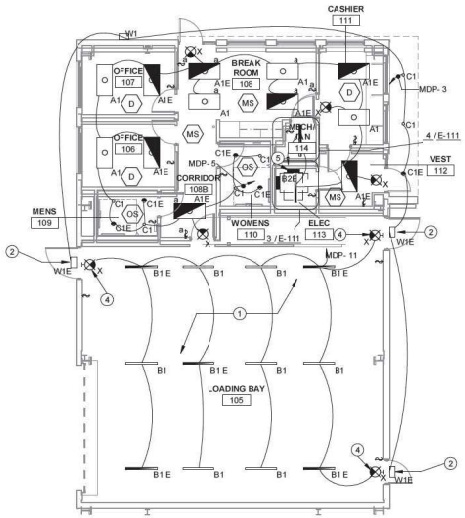

1 Lighting Plan
1/8" = 1'-0"

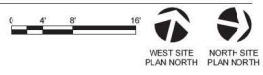

Parkhill

THIS DOCUMENT IS RELEASED ON DATE INDICATED FOR THE PURPOSE OF INTERIM REVIEW UNDER THE AUTHORITY OF ISAAC N. AGUILAR LICENSE # 117619. IT IS NOT TO BE USED FOR REGULATORY APPROVAL, CONSTRUCTION, BIDDING OR PERMIT PURPOSES.
PARKHILL, SMITH & COOPER, INC.

ELECTRICAL

06/27/2023

Parkhill.com

Citizen Collection Stations

City of Midland

MIDLAND
Fuel the Energy!

CLIENT
City of Midland

300 North Loraine
Midland, TX

PROJECT NO.
6119.21 - WEST
40015.22 - NORTH

#	DATE	DESCRIPTION
-	06/27/2023	City Council Review

Electrical Lighting Plan

E-111

6/26/2023 10:48:34 AM

PACKET 6.465 July 11, 2023

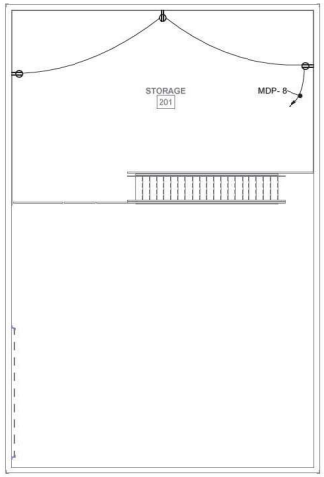

2 Power and Communications Plan - Mezzanine
1/8" = 1'-0"

0 4' 8' 16'

WEST SITE PLAN NORTH

NORTH SITE PLAN NORTH

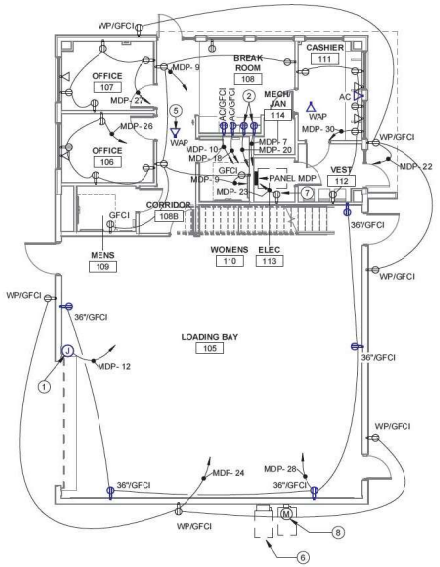

1 Power & Communications Plan
1/8" = 1'-0"

0 4' 8' 16'

WEST SITE PLAN NORTH

NORTH SITE PLAN NORTH

GENERAL NOTES

A. REFER TO THE MECHANICAL DRAWINGS FOR THE LOCATION AND NUMBER OF SUPPLY AND RETURN AIR DUCTS. FOR UNITS THAT ARE INDICATED TO HAVE SMOKE DETECTION COVERAGE, PROVIDE THE NUMBER OF DETECTORS AS REQUIRED TO COVER ALL OF THE DUCTS.
B. ALL CONDUITS SERVING ROOF-MOUNTED EQUIPMENT SHALL BE EXTENDED INSIDE THE UNIT CURBS TO AVOID ADDITIONAL PITCH PANS. ALL EXTERIOR CONDUIT SHALL BE RIGID GALVANIZED STEEL OR LIQUID TIGHT FLEXIBLE CONDUIT AS SPECIFIED.
C. AT LOCATIONS WHERE A COMMON EXHAUST FAN IS CONTROLLED THROUGH INDEPENDENT WALL SWITCHES, CONNECT THE SWITCHES IN PARALLEL TO ALLOW EITHER SWITCH TO OPERATE THE FAN.
D. REFER TO THE MECHANICAL EQUIPMENT ELECTRICAL SCHEDULE FOR BRANCH CIRCUIT REQUIREMENTS FOR ALL MECHANICAL EQUIPMENT.
E. COORDINATE WITH SECURITY CONTRACTOR FOR ALL POWER REQUIREMENTS. REFER TO COMMUNICATION SHEETS FOR JUNCTION BOXES FOR MOTION DETECTORS, KEYPADS, DOOR CONTACTORS, ETC.
F. CONTRACTOR IS RESPONSIBLE FOR PROVIDING CONNECTION OF ALL HVAC AND PLUMBING EQUIPMENT (BUT NOT LIMITED TO RTUS, AHUS, FANS, DAMPERS, LOUVERS, PUMPS AND CONTROLS).
G. PROVIDE DEDICATED NEUTRAL WIRE FOR ALL 120V OR 277V BRANCH CIRCUITS. NO MULTI-WIRE BRANCH CIRCUITS SHALL BE ALLOWED.
H. ELECTRICAL FLOOR PLANS AND SCHEDULES ARE VALID FOR BOTH WEST AND NORTH SITES.

KEY NOTES

AS INDICATED BY: (#)

1. PROVIDE POWER FOR OVERHEAD DOOR EXTEND AND CONNECT (2)#12 AWG + #12 GND IN 3/4" CONDUIT. COORDINATE EXACT LOCATION AND CONTOL LOCATION WITH OVERHEAD DOOR MANUFACTURER.
2. PROVIDE A DEDICATED RECEPTACLE FOR BELOW COUNTER ICE MAKE AND AND REFRIGERATOR AT 30" AFF.
3. TYPICAL DATADROP. PROVIDE SINGLE GANG BACK BOX AND 3/4" CONDUIT LOCATED TO AN ACCESSIBLE LOCATION ABOVE CEILING. PROVIDE BUSHING AT END OF CONDUIT. ROUTE CAT 6 CABLE LAN RACK, UTILIZING J-HOOKS.
4. TYPICAL DATADROP FOR WIRELESS ACCESS POINT(WAP). PROVIDE SINGLE GANG BACK BOX AS REQUIRED. ROUTE CAT 6 CABLE LAN RACK, UTILIZING J-HOOKS.
5. WIRELESS ACCESS POINTS ARE TO BE CEILING MOUNTED. FIELD VERIFY FOR PROPER LOCATION.
6. MOUNT 200A/2P, SERVICE RATED DISCONNECT, WITH 150-AMP FUSES ADJACENT TO ONCOR KWH METER. FIELD VERFY FOR PROPER WORK SPACE CLEARANCE. REFER TO ELECTRIC RISER DIAGRAM FOR MORE INFORMATION.
7. PROVIDE DEDICATED RECEPTACLE FOR IT/LAN RACK. COORDINATE WITH ARCHITECHTUAL FOR PROPER PLACEMENT.
8. NEW KWH METER FOR SERVICE. COORDINATE WITH ONCOR ELECTRIC DELIVERY FOR ALL REQUIREMENTS.

Parkhill

THIS DOCUMENT IS RELEASED ON DATE INDICATED FOR THE PURPOSE OF INTERIM REVIEW UNDER THE AUTHORITY OF ISAAC N. AGUILAR LICENSE # 117619. IT IS NOT TO BE USED FOR REGULATORY APPROVAL, CONSTRUCTION, BIDDING OR PERMIT PURPOSES.
PARKHILL, SMITH & COOPER, INC.
ELECTRICAL
06/27/2023
Parkhill.com

Citizen Collection Stations
City of Midland

MIDLAND Fuel the Energy!

CLIENT
City of Midland

300 North Loraine
Midland, TX

PROJECT NO.
6119.21 - WEST
40015.22 - NORTH

#	DATE	DESCRIPTION
-	06/27/2023	City Council Review

Power & Communications Plan

E-121

6/26/2023 10:48:35 AM

PACKET 6.466 July 11, 2023

GENERAL NOTES

A. FOR CONNECTION REQUIREMENTS AND DETAILS, REFER TO SHEET E-601 FOR MORE INFORMATION.
B. ELECTRICAL FLOOR PLANS AND SCHEDULES ARE VALID FOR BOTH WEST AND NORTH SITES.

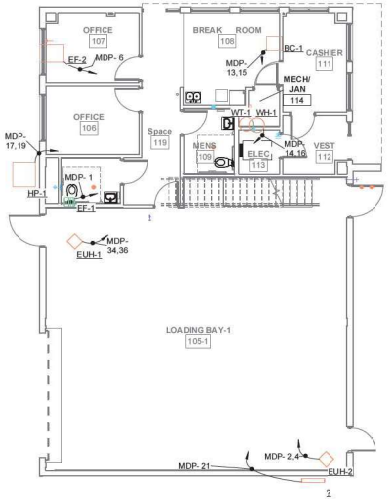

1 MECHANICAL POWER PLAN
18" = 1'-0"

0 4' 8' 16'

WEST SITE PLAN NORTH

NORTH SITE PLAN NORTH

Parkhill

THIS DOCUMENT IS RELEASED ON DATE INDICATED FOR THE PURPOSE OF INTERIM REVIEW UNDER THE AUTHORITY OF ISAAC N. AGUILAR LICENSE # 117619. IT IS NOT TO BE USED FOR REGULATORY APPROVAL, CONSTRUCTION, BIDDING OR PERMIT PURPOSES. PARKHILL, SMITH & COOPER, INC.

ELECTRICAL

06/27/2023

Parkhill.com

Citizen Collection Stations

City of Midland

MIDLAND Fuel the Energy!

CLIENT
City of Midland

300 North Loraine
Midland, TX

PROJECT NO.
6119.21 - WEST
40015.22 - NORTH

#	DATE	DESCRIPTION
-	06/27/2023	City Council Review

Mechanical Equipment Power Plan

E-122

6/26/2023 10:48:37 AM

PACKET 6.467 July 11, 2023

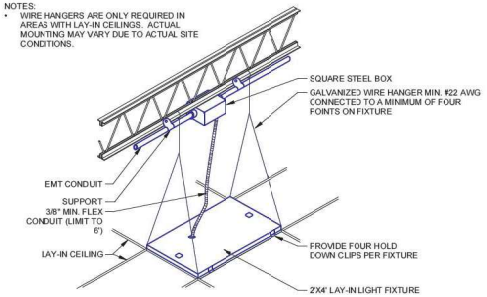

3 RECESSED LIGHT FIXTURE INSTALLATION DETAIL
NTS

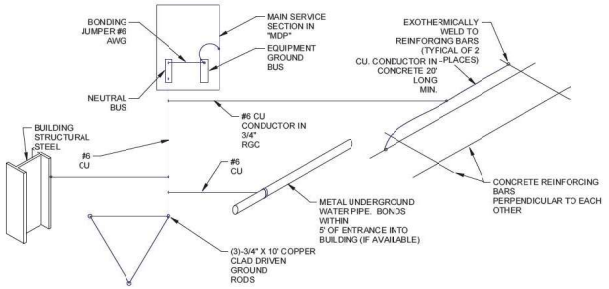

2 GROUNDING DETAIL
NTS

KEYED NOTES

AS INDICATED BY: (#)

1. ELECTRICAL SERVICE FROM UTILITY
2. PROVIDE NEMA 3R, SERVICE RATED, 200A/2P, WITH 150-AMP FUSES. MOUNT ADJACENT TO KWH METER.
3. REFER TO GROUNDING ELECTRODE DETAIL FOR ADDITIONAL INFORMATION.
4. (3) #1/0 AWG + #6 GND in 1 1/2" CONDUIT.

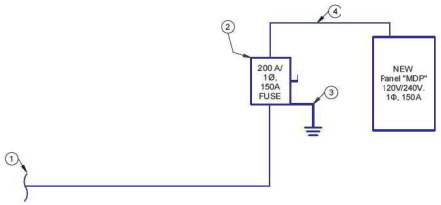

1 ELECTRICAL RISER DIAGRAM - WEST AND NORTH SITE
NTS

Parkhill

THIS DOCUMENT IS RELEASED ON DATE INDICATED FOR THE PURPOSE OF INTERIM REVIEW UNDER THE AUTHORITY OF ISAAC N. AGUILAR LICENSE # 117619. IT IS NOT TO BE USED FOR REGULATORY APPROVAL, CONSTRUCTION, BIDDING OR PERMIT PURPOSES. PARKHILL, SMITH & COOPER, INC.

ELECTRICAL

06/27/2023

Parkhill.com

Citizen Collection Stations

City of Midland

MIDLAND Fuel the Energy!

CLIENT
City of Midland

300 North Loraine
Midland, TX

PROJECT NO.
6119.21 - WEST
40015.22 - NORTH

#	DATE	DESCRIPTION
-	06/27/2023	City Council Review

Electrical Riser Diagram And Details

E-501

06/26/2023 10:48:35 AM

PACKET

6.468

July 11, 2023

LIGHTING CONTROL SEQUENCE MATRIX

DESIGNATION	TYPICAL SPACES	DIMMING	NETWORKED	OCCUPANCY (AUTO ON)	OCCUPANCY (VACANCY)	STAND ALONE	TIME CLOCK	WIRELESS	DESCRIPTION OF LIGHTING CONTROL DEVICES WITHIN SPACE
D	•OFFICES	Yes	No	No	Yes	Yes	No	No	•WALL STATION WITH ON/OFF AND 0-10V DIMMING CAPABILITIES. PROVIDE CONNECTION FOR CONTROL OF LIGHTING THROUGH MULTIPLE SWITCH LOCATIONS. •CEILING MOUNTED OCCUPANCY (VACANCY) SENSOR SHALL TURN ALL LUMINAIRES OFF AFTER TIMEOUT (20 MIN.) EXPIRES.
MS	•CORRIDORS •LOBBIES •VESTIBULES	No	No	Yes	No	Yes	Yes	No	•CN/OFF WALL SWITCH, PROVIDE CONNECTIONS REQUIRED FOR CONTROL OF LIGHTING THROUGH MULTIPLE SWITCH LOCATIONS. •CEILING MOUNTED OCCUPANCY (AUTO "ON") SENSOR SHALL TURN ALL LUMINAIRES OFF AFTER TIMEOUT (20 MIN.) EXPIRES. SHALL AUTOMATICALLY TURN ALL LUMINARES ON TO 100% UPON DETECTION OF MAJOR OR MINOR MOTION. •THIS AREA WILL BE PROGRAMMED WITH TIME CONTROL TO ALLOW FIXTURES TO STAY ON DURING OCCUPIED TIMES (COORDINATE OCCUPIED TIMES AND PROGRAMMING WITH OWNER). LIGHT SWITCH SHALL WLLOW FOR OVERRIDE OF OCCUPANCY SENSORS, PHOTOCELLS, AND TIME PROGRAM.
OS	•SMALL RESTROOMS •SMALL STORAGE ROOMS	No	No	No	Yes	Yes	No	No	•CN/OFF WALL SWITCH WITH INTEGRAL OCCUPANCY SENSOR. INTEGRAL OCCUPANCY SENSOR SHALL TURN ALL LUMINAIRES OFF AFTER (20 MIN.) EXPIRES. •(NETWORK CONTROLS NOT REQUIRED. STAND-ALONE CONTROLS ONLY FOR THIS SPACE.)
SS	•ELECTRICAL ROOMS •MECHANICAL/JANITOR ROOMS	No	No	No	No	Yes	No	No	•CN/OFF WALL SWITCH CONTROL (ONLY) TO AVOID POSSIBLE SAFETY CONCERN OF INADVERTENT OF THAT COULD BE CAUSED BY OCCUPANCY SENSING DEVICES. •(NETWORK CONTROLS NOT REQUIRED. STAND-ALONE CONTROLS ONLY FOR THIS SPACE.)

NOTES:

A. REFER TO PLANS FOR LIGHTING DEVICE LOCATIONS AND OTHER INFORMATION.
B. SYMBOLS PROVIDED IN EACH SPACE (INDICATED IN THE LIGHTING CONTROLS SEQUENCE MATRIX SCHEDULE) ARE INTENDED TO DENOTE THE TYPES OF CONTROLS REQUIRED FOR EACH ASSOCIATED SPACES. THE SWITCH SYMBOLS DENOTE REQUIRED LOCATIONS FOR THE CONTROL DEVICES IN EACH ASSOCIATED SPACE.
C. IN ADDITION TO CONTROL TYPES INDICATED, PROVIDE DAYLIGHT CONTROLS IN ALL AREAS SHOWN WITH DAYLIGHTING ZONES (INDICATED BY HATCHED AREAS ON PLANS). DIMMABLE DRIVERS IN EACH DAYLIGHT ZONE TO BE DIMMED SEPARATELY BY ZONE (CURRENT LIGHT LEVEL TO OFF, CONTINUOUS DIMMING, NO STEP DIMMING). DIMMING FUNCTION IN EACH DAYLIGHT ZONE IS TO MAINTAIN EVEN ILLUMINATION ACROSS THE ZONE, BASED ON THE SETTINGS OF THE SWITCH.
D. PROVIDE NUMBER OF RELAY PACKS, DIMMING RELAY PACKS, OCCUPANCY SENSORS AND PHOTOCELLS FOR COMPLETE AND PROPER OPERATION OF THE LIGHTING SYSTEM.
E. IN COMMON USE SPACES SUCH AS CORRIDORS, LOBBIES, CAFETERIA, AND HUBS/CLUBS. PROVIDE CONNECTION TO FIRE ALARM TO BRING LIGHTING IN THESE AREAS/SPACES TO FULL "ON" IN THE EVENT OF AN ALARM.
F. LIGHTING CONTROLS SHALL COMPLY WITH THE REQUIREMENTS OF THE IECC 2015 AND SHALL BE COMMISIONED IN ACCORDANCE WITH THE REQUIREMENTS OF IECC 408.
G. REFER TO SPECIFICATION SECTION 26 09 43 NETWORKED LIGHTING CONTROLS FOR ADDITIONAL REQUIREMENTS.
H. ELECTRICAL LIGHTING CONTROLS SCHEDULES ARE VALID FOR BOTH WEST AND NORTH SITES.

LIGHTING FIXTURE SCHEDULE

TYPE	ELECTRICAL DATA	MANUFACTURER	MODEL	LAMP	DESCRIPTION
A1	120 V/1-56 VA	LITHONIA	CPANL-2X4-AL06-SWW7-M2	LED	2X4 MULTIVOLT LED SWITCHABLE FLAT PANEL WITH 6000 LUMENS AT 35K COLOR TEMPERATURE
A1E	120 V/1-56 VA	LITHONIA	CPANL-2X4-AL06-SWW7-M2-ILBLPCP1CHESDA	LED	SAME AS TYPE A1 EXCEPT WITH EMERGENCY BATTERY PACKAGE
B1	120 V/1-71 VA	LITHONIA	CLXL48-10000LM-SEF-RDL-MVOLT-EZ1-35K-80CRI-WH	LED	48INCH LED LINEAR LIGHT WITH 10000 LUMEN AT 35K TEMPERATURE
B1 E	120 V/1-71 VA	LITHONIA	CLXL48-10000LM-SEF-RDL-MVOLT-EZ1-35K-80CRI-WH-PS1050	LED	SAME AS TYPE B1 EXCEPT WITH EMERGENCY BATTERY PACK
B2E	120 V/1-30 VA	LITHONIA	ZL1D-L24-3000LM-FST-MVOLT-EZ1-35K-80CRI-E15WLCP	LED	48INCH LED LINEAR LIGHT WITH 3000 LUMEN AT 35K TEMPERATURE AND EMERGENCY BATTERY PACK
B3	120 V/1-26 VA	LITHONIA	CLXL48-4000LM-SEF-RDL-MVOLT-GZ1-35K-80CRI-WH	LED	48INCH LED LINEAR LIGHT WITH 4000 LUMEN AT 35K TEMPERATURE
B3E	120 V/1-26 VA	LITHONIA	CLXL48-4000LM-SEF-RDL-MVOLT-GZ1-35K-80CRI-WH-PS1050	LED	SAME AS TYPE B3 EXCEPT WITH EMERGENCY BATTEY PACK
C1	120 V/1-6 VA	LITHONIA	LDN4-05LM-35K-LO4AR-LSS-MVOLT-UGZ-AT	LED	4 INCH 500 LUMEN MULTIVOLT LED DOWLIGHT AT 3500K COLOR TEMPERATURE
C1E	120 V/1-6 VA	LITHONIA	LDN4-05LM-35K-LO4AR-LSS-MVOLT-UGZ-AT-EL	LED	SAME AS TYPE C1 EXCEPT WITH EMERGENCY BATTERY PACK
W1	120 V/1-25 VA	LITHONIA	WPX1-LED -P2-40K-MVOLT-DBLXD	LED	EXTERIOR MULTIVOLT WALL FIXTURE WITH 2900 LUMENS AND 40K TEMPERATURE
W1E	120 V/1-25 VA	LITHONIA	WPX1-LED -P2-40K-MVOLT-E4WH-DELXD	LED	SAME AS TYPE W1 EXCEPT WITH EMERGENCY BATTERY PACK
X	120 V/1-1 VA	LITHONIA	EXRG-EL-M6	LED	LED EXIT SIGN WITH RED LETTERING AND EMERGENCY BATTERY BACKUP

A. LIGHTED EXIT SIGNS SHALL BE CONNECTED TO THE UNSWITCHED SIDE OF THE CIRCUIT SHOWN ON PLANS.
B. ELECTRICAL LIGHTING SCHEDULES ARE VALID FOR BOTH WEST AND NORTH SITES.

PANELBOARD SCHEDULE

PANELBOARD: MDP
DISTRIBUTION: 120/240V, 1 PHASE, 3 WIRE
SUPPLY FROM:
LOCATION: ELEC 113
MIN AIC RATING: 10000
MCB 150 A
ENCLOSURE: NEMA 1
MOUNTING: SURFACE

CKT	TRIP AMPS	POLES	CIRCUIT DESCRIPTION	A	B	A	B	CIRCUIT DESCRIPTION	POLES	TRIP AMPS	CKT
1	20 A	1	EF-1	115 VA		1500 VA		EUH-2	2	20 A	2
3	20 A	1	OUTDOOR LIGHTING		116 VA		1500 VA				4
5	20 A	1	BREAKROOM AND HALL LIGHTING	784 VA		770 VA		EF-2	1	20 A	6
7	20 A	1	RECEPTACLE		180 VA		360 VA	RECEPTACLE	1	20 A	8
9	20 A	1	RECEPTACLE BREAKROOM 108	900 VA		180 VA		RECEPTACLE BREAKROOM 108	1	20 A	10
11	20 A	1	LOADING BAYS LIGHTING		855 VA		1000 VA	POWER LOADING BAY 105	1	20 A	12
13	15 A	2	BC-1	600 VA		1000 VA		EWH-1	2	20 A	14
15					600 VA		1000 VA				16
17	30 A	2	HP-1	2160 VA		180 VA		RECEPTACLE	1	20 A	18
19					2160 VA		180 VA	RECEPTACLE BREAKROOM 108	1	20 A	20
21	20 A	1	L-1	120 VA		540 VA		OUTDOOR RECEPTACLE	1	20 A	22
23	20 A	1	RECEPTACLE		180 VA		540 VA	OUTDOOR RECEPTACLE	1	20 A	24
25	20 A	1	MEZZANINE LIGHTING 201	156 VA		720 VA		RECEPTACLE OFFICE 106	1	20 A	26
27	20 A	1	RECEPTACLE OFFICE 107		720 VA		900 VA	RECEPTACLE LOADING BAY 105	1	20 A	28
29	20 A	2	Exterior lights	664 VA		900 VA		RECEPTACLE ENTRY 111	1	20 A	30
31					664 VA						32
33						1500 VA		EUH-1	2	20 A	34
35							1500 VA				36
37											38
39											40
41											42

PHASE TOTALS	LOAD	CURRENT
PHASE A	12789 VA	107 A
PHASE B	12447 VA	104 A
PHASE C	0 VA	0 A

TOTAL CONNECTED LOAD	25568 VA
ESTIMATED DEMAND LOAD	25568 VA
DEMAND LINE AMPS	107 A

NOTES:
1. ELECTRICAL SCHEDULES ARE VALID FOR BOTH WEST AND NORTH SITES.

MECHANICAL EQUIPMENT ELECTRICAL SCHEDULE

MARK	Voltage	PHASE	NO. OF PCLES	PANEL	CIRCUIT	BREAKER	CONDUIT	CONDUCTOR	DISCONNECT	NOTE	LOAD
Blower Coil											
BC-1	240 V	1	2	MDP	13,15	15 A	3/4"	(2) #12 AWG + #12 GND	0 A	1,3	1200 VA
Electric Unit Heater											
EUH-1	240 V	1	2	MDP	34,36	20 A	3/4"	(2) #12 AWG + #12 GND	0 A	1	3000 VA
EUH-2	240 V	1	2	MDP	2,4	20 A	3/4"	(2) #12 AWG + #12 GND	0 A	1	3000 VA
Electric Water Heater											
EWH-1	240 V	1	2	MDP	14,16	20 A	3/4"	(2) #12 AWG + #12 GND	30 A		2000 VA
Exhaust Fan											
EF-1	120 V	1	1	MDP	1	20 A	3/4"	(2) #12 AWG + #12 GND	0 A	1	115 VA
EF-2	120 V	1	1	MDP	6	20 A	3/4"	(2) #12 AWG + #12 GND	0 A	1	770 VA
Heat Pump											
HP-1	240 V	1	2	MDP	17,19	30 A	3/4"	(2) #10 AWG + #10 GND	30 A	1,3	4320 VA
Louver/Damper											
L-1	120 V	1	1	MDP	21	20 A	3/4"	(2) #12 AWG + #12 GND	0 A	1	120 VA

NOTES:

1. PROVIDE A MOTOR RATED SWITCH. OVERLOADS SHALL MATCH MOTOR RATING.
2. PROVIDE ROOF-MOUNTED WP/GFCI RECEPTACLE MOUNTED ON/NEAR HVAC EQUIPMENT.
3. PROVIDE 3/4" CONDUIT FROM INDOOR UNIT TO OUTDOOR UNIT TO SUPPORT POWER AND CONTRO. CABLING COORDINATE WITH MANUFACTURER AND MECHANICAL FOR ALL REQUIREMENTS.
4. PROVIDE GFCI RECEPTACLE MOUNTED NEAR EQUIPMENT FOR MEANS OF DISCONNECT
5. ELECTRICAL SCHEDULES ARE VALID FOR BOTH WEST AND NORTH SITES.

6/26/2023 10:48:36 AM

Parkhill

THIS DOCUMENT IS RELEASED ON DATE INDICATED FOR THE PURPOSE OF INTERIM REVIEW UNDER THE AUTHORITY OF ISAAC N. AGUILAR LICENSE # 17619. IT IS NOT TO BE USED FOR REGULATORY APPROVAL, CONSTRUCTION, BIDDING OR PERMIT PURPOSES.
PARKHILL, SMITH & COOPER, INC.

ELECTRICAL

06/27/2023

Parkhill.com

Citizen Collection Stations

City of Midland

MIDLAND
Fuel the Energy!

CLIENT
City of Midland

300 North Loraine
Midland, TX

PROJECT NO.
6119.21 - WEST
40015.22 - NORTH

#	DATE	DESCRIPTION
-	06/27/2023	City Council Review

Electrical Schedules

E-601

City Council Meeting

Item Number: 7

Meeting Date: July 11, 2023

To: City Council / City Manager

From: Regina Stephenson, Director

Subject: **RESOLUTION APPROVING THE SELECTION OF BEYOND ENGINEERING AND TESTING, LLC, ENPROTEC/HIBBS & TODD, INC. DOING BUSINESS AS GEOTEC LABS, AND TERRACON CONSULTANTS, INC. TO ASSIST THE ENGINEERING SERVICES DEPARTMENT WITH CONSTRUCTION MATERIALS TESTING BY PROVIDING PROFESSIONAL ENGINEERING SERVICES AND OTHER SERVICES IN CONNECTION THEREWITH ON AN AS-NEEDED BASIS; AUTHORIZING THE NEGOTIATION AND EXECUTION OF A PROFESSIONAL SERVICES AGREEMENT WITH EACH FIRM; PROVIDING THAT EACH AGREEMENT SHALL BE FOR A TERM NOT TO EXCEED THREE YEARS; AUTHORIZING THE NEGOTIATION AND EXECUTION OF TASK ORDERS IN ACCORDANCE WITH SUCH AGREEMENTS; PROVIDING THAT THE PAYMENT FOR EACH TASK ORDER EXECUTED IN ACCORDANCE WITH SUCH AN AGREEMENT SHALL NOT EXCEED $150,000.00; PROVIDING THAT THE TOTAL COST TO THE CITY FOR ALL TASK ORDERS EXECUTED EACH YEAR IN ACCORDANCE WITH EACH AGREEMENT SHALL NOT EXCEED $300,000.00 PER AGREEMENT PER YEAR; AND AUTHORIZING PAYMENT (DISTRICT: ALL) (GENERAL SERVICES)**

Purpose:

Resolution selecting three (3) engineering firms to provide construction material testing services on an as needed basis for the Engineering Services Department.

Recommended City Council Action:

Approve

Fiscal Impact:

Funding is not required at this time.

Discussion:

The City Manager authorized advertisement and the issuance of a request for qualifications for professional services for up to three (3) firms to assist the Engineering Services Department by providing professional services for construction material testing services for city-wide construction projects on an as-needed basis. Forty-five (45) requests for qualifications were issued. We received four (4) statements of qualifications. Staff recommends selecting Beyond Engineering and Testing, LLC, Enprotec-Hibbs & Todd, Inc. dba Geotec Labs and Terracon Consultants, Inc. and entering into an agreement with each firm to provide these services. Please see the attached memo from Bobby Wojciechowski, Capital Improvement Project Manager, for additional information.

Tina Jaug

City Manager's Office

INTEROFFICE MEMORANDUM

TO: Regina Stephenson, Director of General Services

FROM: Bobby Wojciechowski, CIP Manager

SUBJECT: Professional Services Agreement for Multiple Projects for Construction Material Testing Services

DATE: 6/27/2023 **COUNCIL MEETING DATE:** 7/11/2023

Please carry a council agenda to obtain approval for us to enter PSAs for construction material testing services for city-wide construction projects for Engineering Services. The contracts will be task order style as used currently for us. This contract would be available for use by multiple departments to ensure quality materials and construction methods are used in the City's construction projects.

The three firms, selected according to their qualifications are: Beyond Engineering and Testing, Enprotec - Hibbs, & Todd, Terracon Consultant, Inc. (Firms list in alphabetical order)

Each of the three firms will be considered pre-qualified status to enter into a task order contract as engineering work is needed by the City. Funds to pay the firms will be determined at the time of issuance of the task order.

Let me know if you have any questions.

cc: Jose Ortiz, P.E.
Erika Munoz
Natalie Burgard

RESOLUTION NO. _____

RESOLUTION APPROVING THE SELECTION OF BEYOND ENGINEERING AND TESTING, LLC, ENPROTEC/HIBBS & TODD, INC. DOING BUSINESS AS GEOTEC LABS, AND TERRACON CONSULTANTS, INC. TO ASSIST THE ENGINEERING SERVICES DEPARTMENT WITH CONSTRUCTION MATERIALS TESTING BY PROVIDING PROFESSIONAL ENGINEERING SERVICES AND OTHER SERVICES IN CONNECTION THEREWITH ON AN AS-NEEDED BASIS; AUTHORIZING THE NEGOTIATION AND EXECUTION OF A PROFESSIONAL SERVICES AGREEMENT WITH EACH FIRM; PROVIDING THAT EACH AGREEMENT SHALL BE FOR A TERM NOT TO EXCEED THREE YEARS; AUTHORIZING THE NEGOTIATION AND EXECUTION OF TASK ORDERS IN ACCORDANCE WITH SUCH AGREEMENTS; PROVIDING THAT THE PAYMENT FOR EACH TASK ORDER EXECUTED IN ACCORDANCE WITH SUCH AN AGREEMENT SHALL NOT EXCEED $150,000.00; PROVIDING THAT THE TOTAL COST TO THE CITY FOR ALL TASK ORDERS EXECUTED EACH YEAR IN ACCORDANCE WITH EACH AGREEMENT SHALL NOT EXCEED $300,000.00 PER AGREEMENT PER YEAR; AND AUTHORIZING PAYMENT

WHEREAS, the City of Midland advertised a Request for Qualifications for firms to assist the Engineering Services Department with construction materials testing by providing professional engineering services and other services in connection therewith on an as-needed basis (the "Professional Services"); and

WHEREAS, the firms identified in Section One hereof have agreed to perform said Professional Services; and

WHEREAS, the City Council finds that the firms identified in Section One hereof are qualified to perform said Professional Services; and

WHEREAS, the City Council finds that the fees proposed by the firms identified in Section One hereof are consistent with and not higher than the recommended practices and fees published by the applicable professional associations and do not exceed any maximum provided by law; and

WHEREAS, the City Council finds that the firms identified in Section One hereof provide the Professional Services for a fair and reasonable price; and

WHEREAS, the City Council finds it to be in the public interest to approve the selection of the firms identified in Section One hereof as the most highly qualified providers of said Professional Services based on demonstrated competence, knowledge, and qualifications and on the reasonableness of the proposed fee for the Professional Services;

NOW, THEREFORE, BE IT RESOLVED BY THE CITY COUNCIL OF THE CITY OF MIDLAND, TEXAS:

SECTION ONE. That the selection of Beyond Engineering and Testing, LLC, Enprotec/Hibbs & Todd, Inc. doing business as Geotec Labs, and Terracon Consultants, Inc. to provide the Professional Services is hereby approved.

SECTION TWO. That the Interim City Manager is hereby authorized and directed to negotiate and execute, on behalf of the City of Midland, a professional services agreement with each firm identified in Section One hereof for said Professional Services; provided, however, that each said agreement (1) shall be for a term not to exceed three years, (2) shall provide for the execution of task orders, the cost to the City for each such task order not exceeding $150,000.00, and (3) shall provide that the total cost to the City for all task orders executed each year in accordance with such agreement shall not exceed $300,000.00. Each said agreement shall be maintained on file in the office of the City Secretary, referenced by the date and number of this resolution.

SECTION THREE. That the Interim City Manager is hereby authorized and directed to negotiate and execute, on behalf of the City of Midland, task orders in accordance with said professional services agreements; provided, however, (1) that the payment from the City for each task order shall not exceed $150,000.00 and (2) that the total cost to the City for all task orders executed each year in accordance with each agreement shall not exceed $300,000.00 per agreement per year.

SECTION FOUR. That the City Comptroller is hereby authorized and directed to pay for all work performed under professional services agreements and task orders executed

in accordance with this resolution, pursuant to the terms of said professional services agreements and task orders, from funds available in authorized projects or the Engineering Services Operating Budget, as appropriate, upon receipt of proper invoices or statements approved by the Interim City Manager.

On motion of Council member _____, seconded by Council member _____, the above and foregoing resolution was adopted by the City Council of the City of Midland at a regular meeting on the _____ day of _____, A.D., 2023, by the following vote:

Council members voting "AYE":

Council members voting "NAY":

_____
Lori Merritt Blong, Mayor

ATTEST:

_____
Marcia Bentley-German, City Secretary

RECOMMENDED AND APPROVED:

_____
Morris Williams, Jr., Interim City Manager

APPROVED AS TO CONTENT
AND COMPLETENESS:

_____
Regina Stephenson, General Services Director

_____
Jose Ortiz, Engineering Services Director

APPROVED ONLY AS TO FORM:

_____
John Ohnemiller, City Attorney

On-Call Engineering Services - RFQ Grading Summary									
		Beyond Eng.		Terracon		HVJ		E-HT	
Evaluator A		Score	Total	Score	Total	Score	Total	Score	Total
Firm Experience & Capability	25%	4	1	4	1	2	0.5	3	0.75
Quality of Comparable Work	25%	4	1	4	1	2	0.5	2	0.5
Quality/ Organization of Proposal	20%	4	0.8	4	0.8	5	1	4	0.8
Ability to produce a quality work product	15%	5	0.75	4	0.6	2	0.3	3	0.45
Methodolgy	15%	4	0.6	4	0.6	2	0.3	3	0.45
			0		0		0		0
			0		0		0		0
Sum	100%		4.15		4		2.6		2.95
Evaluator B									
Firm Experience & Capability	25%	5	1.25	4	1	4	1	4	1
Quality of Comparable Work	25%	4	1	5	1.25	4	1	4	1
Quality/ Organization of Proposal	20%	5	1	4	0.8	4	0.8	5	1
Ability to produce a quality work product	15%	4	0.6	5	0.75	4	0.6	4	0.6
Methodolgy	15%	5	0.75	5	0.75	4	0.6	4	0.6
			0		0		0		0
			0		0		0		0
Sum	100%		4.6		4.55		4		4.2
Evaluator C									
Firm Experience & Capability	25%	5	1.25	5	1.25	3	0.75	4	1
Quality of Comparable Work	25%	5	1.25	4	1	4	1	4	1
Quality/ Organization of Proposal	20%	4	0.8	5	1	5	1	5	1
Ability to produce a quality work product	15%	4	0.6	4	0.6	3	0.45	3	0.45
Methodolgy	15%	5	0.75	5	0.75	4	0.6	4	0.6
			0		0		0		0
			0		0		0		0
Sum	100%		4.65		4.6		3.8		4.05
Average			**4.467**		**4.383**		**3.46667**		**3.7333**
			2		1		4		3

PROFESSIONAL SERVICES AGREEMENT FOR MULTIPLE PROJECTS
23003764-1 Construction Material Testing Services

THIS AGREEMENT is made and effective the 12th day of July 2023, by and between the CITY OF MIDLAND, TEXAS, a municipal corporation, hereinafter called "CITY," and, Beyond Engineering and Testing, LLC, hereinafter referred to as "COMPANY."

WHEREAS, CITY desires to retain COMPANY, a professional engineering firm, to provide professional engineering services, architecture services, landscape architecture services, land surveying services, real estate appraising services, and services provided in connection therewith on one or more projects in which the CITY is involved; and

WHEREAS, COMPANY desires to provide such services on such projects as may be agreed from time to time by the parties;

NOW, THEREFORE, in consideration of the mutual covenants contained herein, the parties agree as follows:

ARTICLE I. PURPOSE

The purpose of this Agreement is to state the terms and conditions under which COMPANY shall perform professional engineering services, architecture services, landscape architecture services, land surveying services, real estate appraising services, and services provided in connection therewith for the City of Midland.

ARTICLE II. SERVICES TO BE PERFORMED

1. This Agreement shall apply to as many projects as CITY and COMPANY agree will be performed under the terms and conditions of this Agreement.
2. Each project that COMPANY performs for CITY hereunder shall be designated by a "Task Order." A Task Order shall be in the form of that attached hereto and incorporated herein as Exhibit "A" or a form substantially similar thereto. No Task Order shall be binding or enforceable unless and until it has been properly executed by both CITY and COMPANY. Each properly executed Task Order shall become a separate supplemental agreement to this Agreement.
3. COMPANY shall provide those services described in each properly executed Task Order.
4. COMPANY shall perform said services (1) with the professional skill and care ordinarily provided by competent professionals practicing in the same or similar locality

and under the same or similar circumstances and professional license and (2) as expeditiously as is prudent considering the ordinary professional skill and care of a competent professional. COMPANY represents that any employee who performs services under this Agreement shall be fully qualified and competent to perform said services.

5. In resolving potential conflicts between this Agreement and the Task Order pertaining to a specific project, the terms of the Task Order shall control except to the extent that the terms of the Task Order conflict with Article III below.

ARTICLE III. FINANCIAL CONSIDERATIONS

CITY agrees to pay COMPANY for said professional services in accordance with Part 5 of each Task Order; provided, however, (1) that the payment from CITY to COMPANY for each Task Order shall not exceed $150,000.00 and (2) that the total cost to CITY for all Task Orders executed by CITY and COMPANY each year in accordance with this Agreement shall not exceed $300,000.00 per year. COMPANY shall provide to CITY a monthly invoice. The monthly invoice shall set forth all service fees for the month and those expenses described in the Task Order incurred during the previous month which have received advance written approval from the City Manager. The City Manager must approve all additional expenses and reimbursable expenses in advance. Within 30 days of the date on which COMPANY's invoice is received by CITY, CITY shall pay the full amount of such invoice; provided, however, that if CITY objects to any portion of an invoice, CITY shall notify COMPANY of CITY's objection and the grounds therefor within 15 days of the date of receipt of the invoice, and the parties immediately shall make every effort to settle the disputed portion of the invoice. CITY in any event shall pay every portion of the invoice that is not in dispute within the 30-day period for payment.

ARTICLE IV. TERM

The Initial term of this Agreement shall be from July 12, 2023 until July 12, 2026 unless by providing written notice to COMPANY of CITY's desire to extend the Contract not later than sixty (60) days prior to the end of the then current term. Extensions of this Contract will be based on acceptable performance as long as the price does not exceed administrative parameters.

ARTICLE V. TERMINATION AT WILL

CITY may terminate this Agreement at will for no or any reason upon giving at least one-hundred-eighty (180) days written notice to COMPANY. The parties to this Agreement

understand and agree that it is in CITY'S sole discretion to cancel the Agreement during the term of the Agreement without penalty to CITY. COMPANY has no expectation and has received no guarantees that this Agreement will not be terminated before the end of the Agreement term. The parties have bargained for the flexibility of terminating this Agreement upon tender of the requisite notice at any time during the term of the Agreement. All work and services under the Agreement shall be suspended upon termination of the Agreement becoming effective.

ARTICLE VI. ASSIGNMENT

COMPANY shall not, either directly or indirectly, assign all or any part of this Agreement or any interest, right or privilege herein, without the prior written consent of CITY. The issue on whether or not to grant consent to an assignment is in the sole discretion of CITY.

ARTICLE VII. OWNERSHIP AND CONFIDENTIALITY OF DOCUMENTS AND OTHER WORK PRODUCT

All reports, information and other data ("instruments of service"), given to, prepared or assembled by COMPANY under this Agreement, and any other related documents or items shall become the sole property of CITY and shall be delivered to CITY, without restriction, except that COMPANY may make copies of any and all instruments of service for its files. CITY shall not make any modification to the plans and specifications or make them available for use by third parties without the prior written authorization of COMPANY, which consent shall not be unreasonably withheld.

ARTICLE VIII. INDEPENDENT CONTRACTOR

It is expressly understood and agreed that COMPANY shall perform all work and services described herein as an independent contractor and not as an officer, agent, servant or employee of CITY; that COMPANY shall have exclusive control of and the exclusive right to control the details of the services and work performed hereunder, and all persons performing the same; and shall be solely responsible for the acts and omissions of its officers, agents, employees, contractors and subcontractors; that the doctrine of respondeat superior shall not apply as between CITY and COMPANY, its officers, agents, employees, contractors and subcontractors; and that nothing herein shall be construed as creating a partnership or joint enterprise between CITY and COMPANY. No person performing any of the work and services described hereunder by COMPANY shall be considered an officer, agent, servant or employee of CITY. Further, it is specifically understood and agreed that nothing in this Agreement is

intended or shall be construed as creating a "Community of Pecuniary Interest" or "An Equal Right of Control" which would give rise to vicarious liability. COMPANY shall be an independent contractor under this Agreement and shall assume all of the rights, obligations and liabilities, applicable to it as such independent contractor hereunder. CITY does not have the power to direct the order in which the work is done. CITY shall not have the right to control the means, methods or details of COMPANY'S work. COMPANY shall assume exclusive responsibility for the work. COMPANY is entirely free to do the work in its own way.

ARTICLE IX. INSURANCE

COMPANY shall at all times during the term of this Agreement maintain and keep in full force and effect insurance in the following types and minimum amounts with companies authorized to do business in the State of Texas:

Commercial General Liability (including Contractual liability):

-Personal Injury:	$1,000,000.00 per person
	$1,000,000.00 per occurrence
-Property Damage:	$500,000.00 per occurrence
Business Automobile Liability:	$250,000.00 combined single limit - Personal Injury and Property Damage
Workers' Compensation:	Statutory limits
Employers' Liability:	$500,000.00 per accident or occurrence

The Commercial General Liability shall be on a per project aggregate, including completed operations, and shall be on a claims-occurred basis. This insurance shall name CITY as an additional insured and waive subrogation in favor of CITY.

The Business Automobile Liability insurance provided by COMPANY shall cover any auto for bodily injury and property damage, including owned vehicles, hired and non-city vehicles, and employee non-ownership, and the amount of such policy shall be a minimum of $250,000.00 covering any vehicle used for the execution of the work that is the subject of this Agreement. This insurance shall name CITY as an additional insured and waive subrogation in favor of CITY.

The Workers' Compensation coverage provided by COMPANY shall inure to the benefit of employees injured during the course and scope of their employment by COMPANY pursuant to this Agreement. The Workers' Compensation shall waive all rights of subrogation in favor of CITY.

All insurance required pursuant to this Agreement shall provide for a waiver of

subrogation in favor of CITY. All insurance required pursuant to this Agreement, except for Workers' Compensation Insurance, shall name CITY as an additional insured on a claims occurred basis. CITY shall be provided the notice by COMPANY'S insurance provider not later than thirty (30) days prior to any reduction or termination of such coverage.

COMPANY shall contractually require all contractors, subcontractors, and sub-subcontractors that work on any portion of the work that is the subject of this Agreement to obtain insurance coverage that meets or exceeds the policy requirements and minimum amounts specified herein. All contractors, subcontractors, and sub-subcontractors shall obtain insurance policies that provide blanket waivers of subrogation in favor of the City of Midland and policies that name the City of Midland as an additional insured on a claims occurred basis (except workers' compensation).

The parties agree that, prior to the execution of the Agreement, COMPANY shall provide one or more certificates of insurance specifically stating that these requirements have been met and subject to the approval of CITY. CITY shall not be required to provide any insurance whatsoever pursuant to this Agreement.

COMPANY certifies that the certificate of insurance provided as required herein complies with the requirements of Chapter 1811 of the Texas Insurance Code. COMPANY shall not use an unapproved certificate of insurance or insert inappropriate language on a certificate. Compliance with state law is the sole responsibility of COMPANY.

ARTICLE X. ATTORNEY FEES

BY EXECUTING THIS AGREEMENT, COMPANY AGREES TO WAIVE AND DOES HEREBY KNOWINGLY, CONCLUSIVELY, VOLUNTARILY AND INTENTIONALLY WAIVE ANY CLAIM IT HAS OR MAY HAVE IN THE FUTURE AGAINST CITY, REGARDING THE AWARD OF ATTORNEY'S FEES, WHICH ARE IN ANY WAY RELATED TO THE AGREEMENT, OR THE CONSTRUCTION, INTERPRETATION OR BREACH OF THE AGREEMENT. COMPANY SPECIFICALLY AGREES THAT IF COMPANY BRINGS OR COMMENCES ANY LEGAL ACTION OR PROCEEDING RELATED TO THIS AGREEMENT, THE CONSTRUCTION, INTERPRETATION, VALIDITY OR BREACH OF THIS AGREEMENT, INCLUDING BUT NOT LIMITED TO ANY ACTION PURSUANT TO THE PROVISIONS OF THE TEXAS UNIFORM DECLARATORY JUDGMENTS ACT (TEXAS CIVIL PRACTICE AND REMEDIES CODE SECTION 37.001, ET SEQ., AS AMENDED), OR CHAPTER 271 OF THE TEXAS LOCAL GOVERNMENT CODE,

COMPANY AGREES TO ABANDON, WAIVE AND RELINQUISH ANY AND ALL RIGHTS TO THE RECOVERY OF ATTORNEY'S FEES TO WHICH COMPANY MIGHT OTHERWISE BE ENTITLED.

COMPANY AGREES THAT THIS IS THE VOLUNTARY AND INTENTIONAL RELINQUISHMENT AND ABANDONMENT OF A PRESENTLY EXISTING KNOWN RIGHT. COMPANY ACKNOWLEDGES THAT IT UNDERSTANDS ALL TERMS AND CONDITIONS OF THE AGREEMENT. COMPANY FURTHER ACKNOWLEDGES AND AGREES THAT THERE WAS AND IS NO DISPARITY OF BARGAINING POWER BETWEEN CITY AND COMPANY. THIS SECTION SHALL NOT BE CONSTRUED OR INTERPRETED AS A WAIVER OF GOVERNMENTAL IMMUNITY.

COMPANY AND CITY ARE RELYING ON THEIR OWN JUDGMENT. EACH PARTY HAD THE OPPORTUNITY TO DISCUSS THIS AGREEMENT WITH COMPETENT LEGAL COUNSEL PRIOR TO ITS EXECUTION.

ARTICLE XI. GOVERNMENTAL IMMUNITY

By executing this agreement CITY is not waiving its right of governmental immunity. CITY is retaining its immunity from suit. CITY is not granting consent to be sued by legislative resolution or action.

THERE IS NO WAIVER OF GOVERNMENTAL IMMUNITY.

ARTICLE XII. NO THIRD-PARTY BENEFICIARIES

CITY'S approval of this agreement does not create a third-party beneficiary. There is no third-party beneficiary to this Agreement. No person or entity who is not a party to this Agreement shall have any third-party beneficiary or other rights hereunder.

ARTICLE XIII. RELEASE

NOTWITHSTANDING ANY OTHER PROVISIONS, COMPANY HEREBY RELEASES, ACQUITS, RELINQUISHES AND FOREVER DISCHARGES CITY, CITY'S EMPLOYEES AND OFFICERS, FROM ANY AND ALL DEMANDS, CLAIMS, DAMAGES, OR CAUSES OF ACTION OF ANY KIND WHATSOEVER WHICH COMPANY HAS OR MIGHT HAVE IN THE FUTURE, INCLUDING BUT NOT LIMITED TO BREACH OF AGREEMENT, QUANTUM MERUIT, CLAIMS UNDER

THE DUE PROCESS AND TAKINGS CLAUSES OF THE TEXAS AND UNITED STATES CONSTITUTIONS, TORT CLAIMS, OR CITY'S NEGLIGENCE.

ARTICLE XIV. GENERAL PROVISIONS

A. Waiver. No waiver by CITY of a breach of any covenant, condition, or restriction of this Agreement shall be construed or held to be a waiver of any succeeding or preceding breach of the same or any other covenant, condition, or restriction contained in this Agreement.

B. Governing Law and Venue. This Agreement shall be governed by the laws of the State of Texas. All performance and payment made pursuant to this Agreement shall be deemed to have occurred in Midland County, Texas. Exclusive venue for any claims, suits or any other action arising from or connected in any way to this Agreement or the performance of this Agreement shall be in Midland County, Texas. The obligations and undertakings of each of the parties to this Agreement shall be deemed to have occurred in Midland County, Texas. This Agreement shall be governed by, interpreted, enforced and construed under the laws of the State of Texas. The laws of the State of Texas shall govern, construe and enforce all the rights and duties of the parties, including but not limited to tort claims and any and all contractual claims or disputes, arising from or relating in any way to the subject matter of this Agreement, without regard to conflict of laws and rules that would direct application of the laws of another jurisdiction.

C. Notice. Any notice or demand that shall be made regarding this Agreement, shall be made in writing and delivered either in person or by certified or registered mail. Notice by mail shall be complete upon deposit of the paper, postage prepaid, in a post office or official depository under the care and custody of the United States Postal Service addressed as follows:

If to CITY: City Manager's Office
P.O. Box 1152
Midland, Texas 79702

If to COMPANY: Beyond Engineering and Testing, LLC
3801 Doris Lane, Suite B
Round Rock, TX 78664

The parties hereto may change the above-designated addresses by giving notice pursuant to the terms of this Section.

D. Severability. In case any one or more of the provisions contained in this Agreement shall for any reason be held to be invalid, illegal, or unenforceable in any respect, this invalidity, illegality, or unenforceability shall not affect any other provision of the Agreement, and this Agreement shall be construed as if the invalid, illegal, or unenforceable provision had never been contained herein.

E. Use of Language. Words in the singular shall be held to include the plural, unless the context otherwise requires.

F. Amendments, Modifications, Alterations. No amendment, modification, or alteration of the terms of this Agreement shall be binding unless it is in writing, dated subsequent to the date of this Agreement, and duly executed by the parties to this Agreement.

G. Counterparts. This Agreement may be executed in multiple counterparts, each of which shall be deemed as original, and all of which shall constitute one and the same instrument.

H. Federal Wage Requirements. If applicable, the Davis-Bacon Act, 29 CFR 5.5, and any related acts or regulations are hereby incorporated by reference and made a part of this Agreement, and all terms and requirements under said laws, by such incorporation, are made terms and requirements of this Agreement, to which the parties to this Agreement have agreed to be bound.

I. Notice of Alleged Breach; Statutory Prerequisites. As a condition precedent to filing suit for alleged damages incurred by an alleged breach of an express or implied provision of this Agreement, COMPANY or his legal representative, shall give the City Manager, or any other reasonable official of CITY, notice in writing (consisting of one original and seven copies of notice attached to a copy of this Agreement) of such damages, duly verified, within one-hundred fifty (150) days after the same has been sustained. The discovery rule does not apply to the giving of this notice. The notice shall include when, where and how the damages occurred, the apparent extent thereof, the amount of damages sustained, the amount for which COMPANY will settle, the physical and mailing addresses of COMPANY at the time and date the claim was presented and the physical and mailing addresses of COMPANY for the six months immediately preceding the occurrence of such damages, and the names and addresses of the witnesses upon whom COMPANY relies to establish its claim; and a failure to so notify the City Manager within the time and manner provided herein shall exonerate, excuse and except CITY from any liability whatsoever. CITY is under no obligation to provide notice to COMPANY that COMPANY'S

notice is insufficient. CITY reserves the right to request reasonable additional information regarding the claim. Said additional information shall be supplied within thirty (30) days after receipt of notice.

The statutory prerequisites outlined herein constitute jurisdictional requirements pursuant to Section 271.154 of the Texas Local Government Code and Section 311.034 of the Texas Government Code. Notwithstanding any other provision, COMPANY'S failure to comply with the requirements herein shall perpetually bar COMPANY'S claim for damages under Chapter 271 of the Texas Local Government Code, and Section 311.034 of the Texas Government Code, regardless if CITY has actual or constructive notice or knowledge of said claim or alleged damages. COMPANY agrees that the requirements of this entire Agreement are reasonable.

J. PROMPT PAY ACT - CITY and COMPANY agree that Texas Government Code, Chapter 2251, Payment for Goods and Services (the "Prompt Pay Act") does not waive governmental immunity.

K. Compliance. – COMPANY agrees that it shall comply with Texas Government Code Section 2252.908, as amended. COMPANY agrees that it shall comply with Texas Local Government Code Section 176.006, as amended.

L. Anti-Boycott Statutes. To the extent that Tex. Gov't Code §§ 2271.002 and 2274.002 apply to this Agreement, COMPANY hereby verifies that:

- COMPANY does not boycott Israel and will not boycott Israel during the term of this Agreement;
- COMPANY does not boycott energy companies and will not boycott energy companies during the term of this Agreement; and
- COMPANY does not have a practice, policy, guidance, or directive that discriminates against a firearm entity or firearm trade association and will not discriminate during the term of this Agreement against any firearm entity or firearm trade association.

If Tex. Gov't Code § 2270.002 does not apply to this Agreement, such verification is not required, and COMPANY shall be deemed to have not made such verification.

M. Records Retention and Production of Information. To the extent that this Agreement is a contract described by Tex. Gov't Code § 552.371, COMPANY shall: (i) preserve all contracting information related to the Agreement as provided by the records retention requirements applicable to CITY for the duration of the contract; (ii) promptly provide to CITY

any contracting information related to the Agreement that is in the custody or possession of COMPANY on request of CITY; and (iii) on completion of the Agreement, either (a) provide at no cost to CITY all contracting information related to the Agreement that is in the custody or possession of COMPANY, or (b) preserve the contracting information related to the Agreement as provided by the records retention requirements applicable to CITY.

N. Public Information. To the extent that this Agreement is a contract described by Tex. Gov't Code § 552.371, COMPANY agrees as follows in accordance with Tex. Gov't Code § 552.372(b): The requirements of Subchapter J, Chapter 552, Government Code, may apply to this contract, and the contractor or vendor agrees that the contract can be terminated if the contractor or vendor knowingly or intentionally fails to comply with a requirement of that subchapter.

O. Conflict of Terms. If a conflict of terms or language exists between: (i) any of the provisions of this Agreement; and (ii) any of the provisions contained in any exhibit(s) attached to this Agreement, precedence shall be given to the provisions of this Agreement. For the avoidance of any doubt, the provisions contained in this Agreement shall supersede any and all conflicting provisions contained in any exhibit(s) attached hereto. Furthermore, the Parties acknowledge and agree that any provision contained in an exhibit(s) attached to this Agreement that imposes an additional express or implied obligation on CITY is hereby made void and of no force or effect. CITY's sole and exclusive obligations under this Agreement are contained in the provisions of this Agreement that precede the signature page(s), which evidences the Parties' execution and acceptance hereof.

P. Iron or Steel Products Statute. Company agrees that all iron or steel products produced through a manufacturing process and used in the project that is the subject of this Agreement shall be produced in the United States in accordance with Government Code § 2252.202, et seq., as amended.

Q. Interpretation. By executing this Agreement, the Parties acknowledge and agree that this Agreement shall not be interpreted or construed against any Party solely because such Party or its legal counsel drafted this Agreement. The Parties have read, understood, and approve of the language and terms set forth herein.

[Signature Page(s) Follows]

EXECUTED IN DUPLICATE the day and year first above mentioned.

THE CITY OF MIDLAND, TEXAS

_____
Morris Williams Jr., Interim City Manager

ATTEST:

_____
Marcia Bentley-German, City Governance Officer/City Secretary

APPROVED AS TO FORM ONLY:

_____
John Ohnemiller, City Attorney

COMPANY:

By: _____

Name:_____

Title: _____

STATE OF _____§
§
COUNTY OF _____§

BEFORE ME, the undersigned authority, on this ____ day of _____, 2023 personally appeared,_____, an officer of Beyond Engineering and Testing, LLC, known to me to be the person and official whose name is subscribed to the forgoing instrument, and acknowledged to me that he executed the same as the act and deed of said corporation, for the purposes and consideration therein expressed, and in the capacity therein stated.

GIVEN UNDER MY HAND AND SEAL OF OFFICE this the __day of _____, 2023.

_____
Notary Public, State of Texas

EXHIBIT 'A'

TASK ORDER NO. __

This Task Order pertains to an Agreement by and between City of Midland, Texas, ("CITY"), and _____ ("COMPANY"), dated _____, 20___, ("the Agreement"). COMPANY shall perform services on the project described below as provided herein and in the Agreement. This Task Order shall not be binding until it has been properly signed by both parties. Upon execution, this Task Order shall supplement the Agreement as it pertains to the project described below.

TASK ORDER NUMBER: ___
PROJECT NAME: _____

PART 1.0 PROJECT DESCRIPTION:

PART 2.0 SCOPE OF SERVICES TO BE PERFORMED BY COMPANY ON THE PROJECT:

PART 3.0 CITY'S RESPONSIBILITIES:

PART 4.0 PERIODS OF SERVICE:

PART 5.0 PAYMENTS TO COMPANY:

PART 6.0 OTHER:

This Task Order is executed this _____ day of _____, 20___.

CITY OF MIDLAND, TEXAS		_____	
"CITY"		"COMPANY"	
BY:	_____	BY:	_____
NAME:	Morris Williams, Jr.	NAME:	_____
TITLE:	Interim City Manager	TITLE:	_____
ADDRESS:	P.O. Box 1152 Midland, TX 79702	ADDRESS:	_____

PROFESSIONAL SERVICES AGREEMENT FOR MULTIPLE PROJECTS
23003764-3 Construction Material Testing Services

THIS AGREEMENT is made and effective the 12th day of July 2023, by and between the CITY OF MIDLAND, TEXAS, a municipal corporation, hereinafter called "CITY," and, Enprotec/Hibbs & Todd, Inc. dba Geotec Labs, hereinafter referred to as "COMPANY."

WHEREAS, CITY desires to retain COMPANY, a professional engineering firm, to provide professional engineering services, architecture services, landscape architecture services, land surveying services, real estate appraising services, and services provided in connection therewith on one or more projects in which the CITY is involved; and

WHEREAS, COMPANY desires to provide such services on such projects as may be agreed from time to time by the parties;

NOW, THEREFORE, in consideration of the mutual covenants contained herein, the parties agree as follows:

ARTICLE I. PURPOSE

The purpose of this Agreement is to state the terms and conditions under which COMPANY shall perform professional engineering services, architecture services, landscape architecture services, land surveying services, real estate appraising services, and services provided in connection therewith for the City of Midland.

ARTICLE II. SERVICES TO BE PERFORMED

1. This Agreement shall apply to as many projects as CITY and COMPANY agree will be performed under the terms and conditions of this Agreement.
2. Each project that COMPANY performs for CITY hereunder shall be designated by a "Task Order." A Task Order shall be in the form of that attached hereto and incorporated herein as Exhibit "A" or a form substantially similar thereto. No Task Order shall be binding or enforceable unless and until it has been properly executed by both CITY and COMPANY. Each properly executed Task Order shall become a separate supplemental agreement to this Agreement.
3. COMPANY shall provide those services described in each properly executed Task Order.
4. COMPANY shall perform said services (1) with the professional skill and care ordinarily provided by competent professionals practicing in the same or similar locality

and under the same or similar circumstances and professional license and (2) as expeditiously as is prudent considering the ordinary professional skill and care of a competent professional. COMPANY represents that any employee who performs services under this Agreement shall be fully qualified and competent to perform said services.

5. In resolving potential conflicts between this Agreement and the Task Order pertaining to a specific project, the terms of the Task Order shall control except to the extent that the terms of the Task Order conflict with Article III below.

ARTICLE III. FINANCIAL CONSIDERATIONS

CITY agrees to pay COMPANY for said professional services in accordance with Part 5 of each Task Order; provided, however, (1) that the payment from CITY to COMPANY for each Task Order shall not exceed $150,000.00 and (2) that the total cost to CITY for all Task Orders executed by CITY and COMPANY each year in accordance with this Agreement shall not exceed $300,000.00 per year. COMPANY shall provide to CITY a monthly invoice. The monthly invoice shall set forth all service fees for the month and those expenses described in the Task Order incurred during the previous month which have received advance written approval from the City Manager. The City Manager must approve all additional expenses and reimbursable expenses in advance. Within 30 days of the date on which COMPANY's invoice is received by CITY, CITY shall pay the full amount of such invoice; provided, however, that if CITY objects to any portion of an invoice, CITY shall notify COMPANY of CITY's objection and the grounds therefor within 15 days of the date of receipt of the invoice, and the parties immediately shall make every effort to settle the disputed portion of the invoice. CITY in any event shall pay every portion of the invoice that is not in dispute within the 30-day period for payment.

ARTICLE IV. TERM

The Initial term of this Agreement shall be from July 12, 2023 until July 12, 2026 unless by providing written notice to COMPANY of CITY's desire to extend the Contract not later than sixty (60) days prior to the end of the then current term. Extensions of this Contract will be based on acceptable performance as long as the price does not exceed administrative parameters.

ARTICLE V. TERMINATION AT WILL

CITY may terminate this Agreement at will for no or any reason upon giving at least one-hundred-eighty (180) days written notice to COMPANY. The parties to this Agreement

understand and agree that it is in CITY'S sole discretion to cancel the Agreement during the term of the Agreement without penalty to CITY. COMPANY has no expectation and has received no guarantees that this Agreement will not be terminated before the end of the Agreement term. The parties have bargained for the flexibility of terminating this Agreement upon tender of the requisite notice at any time during the term of the Agreement. All work and services under the Agreement shall be suspended upon termination of the Agreement becoming effective.

ARTICLE VI. ASSIGNMENT

COMPANY shall not, either directly or indirectly, assign all or any part of this Agreement or any interest, right or privilege herein, without the prior written consent of CITY. The issue on whether or not to grant consent to an assignment is in the sole discretion of CITY.

ARTICLE VII. OWNERSHIP AND CONFIDENTIALITY OF DOCUMENTS AND OTHER WORK PRODUCT

All reports, information and other data ("instruments of service"), given to, prepared or assembled by COMPANY under this Agreement, and any other related documents or items shall become the sole property of CITY and shall be delivered to CITY, without restriction, except that COMPANY may make copies of any and all instruments of service for its files. CITY shall not make any modification to the plans and specifications or make them available for use by third parties without the prior written authorization of COMPANY, which consent shall not be unreasonably withheld.

ARTICLE VIII. INDEPENDENT CONTRACTOR

It is expressly understood and agreed that COMPANY shall perform all work and services described herein as an independent contractor and not as an officer, agent, servant or employee of CITY; that COMPANY shall have exclusive control of and the exclusive right to control the details of the services and work performed hereunder, and all persons performing the same; and shall be solely responsible for the acts and omissions of its officers, agents, employees, contractors and subcontractors; that the doctrine of respondeat superior shall not apply as between CITY and COMPANY, its officers, agents, employees, contractors and subcontractors; and that nothing herein shall be construed as creating a partnership or joint enterprise between CITY and COMPANY. No person performing any of the work and services described hereunder by COMPANY shall be considered an officer, agent, servant or employee of CITY. Further, it is specifically understood and agreed that nothing in this Agreement is

intended or shall be construed as creating a "Community of Pecuniary Interest" or "An Equal Right of Control" which would give rise to vicarious liability. COMPANY shall be an independent contractor under this Agreement and shall assume all of the rights, obligations and liabilities, applicable to it as such independent contractor hereunder. CITY does not have the power to direct the order in which the work is done. CITY shall not have the right to control the means, methods or details of COMPANY'S work. COMPANY shall assume exclusive responsibility for the work. COMPANY is entirely free to do the work in its own way.

ARTICLE IX. INSURANCE

COMPANY shall at all times during the term of this Agreement maintain and keep in full force and effect insurance in the following types and minimum amounts with companies authorized to do business in the State of Texas:

Commercial General Liability (including Contractual liability):

-Personal Injury:	$1,000,000.00 per person
	$1,000,000.00 per occurrence
-Property Damage:	$500,000.00 per occurrence
Business Automobile Liability:	$250,000.00 combined single limit - Personal Injury and Property Damage
Workers' Compensation:	Statutory limits
Employers' Liability:	$500,000.00 per accident or occurrence

The Commercial General Liability shall be on a per project aggregate, including completed operations, and shall be on a claims-occurred basis. This insurance shall name CITY as an additional insured and waive subrogation in favor of CITY.

The Business Automobile Liability insurance provided by COMPANY shall cover any auto for bodily injury and property damage, including owned vehicles, hired and non-city vehicles, and employee non-ownership, and the amount of such policy shall be a minimum of $250,000.00 covering any vehicle used for the execution of the work that is the subject of this Agreement. This insurance shall name CITY as an additional insured and waive subrogation in favor of CITY.

The Workers' Compensation coverage provided by COMPANY shall inure to the benefit of employees injured during the course and scope of their employment by COMPANY pursuant to this Agreement. The Workers' Compensation shall waive all rights of subrogation in favor of CITY.

All insurance required pursuant to this Agreement shall provide for a waiver of

subrogation in favor of CITY. All insurance required pursuant to this Agreement, except for Workers' Compensation Insurance, shall name CITY as an additional insured on a claims occurred basis. CITY shall be provided the notice by COMPANY'S insurance provider not later than thirty (30) days prior to any reduction or termination of such coverage.

COMPANY shall contractually require all contractors, subcontractors, and sub-subcontractors that work on any portion of the work that is the subject of this Agreement to obtain insurance coverage that meets or exceeds the policy requirements and minimum amounts specified herein. All contractors, subcontractors, and sub-subcontractors shall obtain insurance policies that provide blanket waivers of subrogation in favor of the City of Midland and policies that name the City of Midland as an additional insured on a claims occurred basis (except workers' compensation).

The parties agree that, prior to the execution of the Agreement, COMPANY shall provide one or more certificates of insurance specifically stating that these requirements have been met and subject to the approval of CITY. CITY shall not be required to provide any insurance whatsoever pursuant to this Agreement.

COMPANY certifies that the certificate of insurance provided as required herein complies with the requirements of Chapter 1811 of the Texas Insurance Code. COMPANY shall not use an unapproved certificate of insurance or insert inappropriate language on a certificate. Compliance with state law is the sole responsibility of COMPANY.

ARTICLE X. ATTORNEY FEES

BY EXECUTING THIS AGREEMENT, COMPANY AGREES TO WAIVE AND DOES HEREBY KNOWINGLY, CONCLUSIVELY, VOLUNTARILY AND INTENTIONALLY WAIVE ANY CLAIM IT HAS OR MAY HAVE IN THE FUTURE AGAINST CITY, REGARDING THE AWARD OF ATTORNEY'S FEES, WHICH ARE IN ANY WAY RELATED TO THE AGREEMENT, OR THE CONSTRUCTION, INTERPRETATION OR BREACH OF THE AGREEMENT. COMPANY SPECIFICALLY AGREES THAT IF COMPANY BRINGS OR COMMENCES ANY LEGAL ACTION OR PROCEEDING RELATED TO THIS AGREEMENT, THE CONSTRUCTION, INTERPRETATION, VALIDITY OR BREACH OF THIS AGREEMENT, INCLUDING BUT NOT LIMITED TO ANY ACTION PURSUANT TO THE PROVISIONS OF THE TEXAS UNIFORM DECLARATORY JUDGMENTS ACT (TEXAS CIVIL PRACTICE AND REMEDIES CODE SECTION 37.001, ET SEQ., AS AMENDED), OR CHAPTER 271 OF THE TEXAS LOCAL GOVERNMENT CODE,

COMPANY AGREES TO ABANDON, WAIVE AND RELINQUISH ANY AND ALL RIGHTS TO THE RECOVERY OF ATTORNEY'S FEES TO WHICH COMPANY MIGHT OTHERWISE BE ENTITLED.

COMPANY AGREES THAT THIS IS THE VOLUNTARY AND INTENTIONAL RELINQUISHMENT AND ABANDONMENT OF A PRESENTLY EXISTING KNOWN RIGHT. COMPANY ACKNOWLEDGES THAT IT UNDERSTANDS ALL TERMS AND CONDITIONS OF THE AGREEMENT. COMPANY FURTHER ACKNOWLEDGES AND AGREES THAT THERE WAS AND IS NO DISPARITY OF BARGAINING POWER BETWEEN CITY AND COMPANY. THIS SECTION SHALL NOT BE CONSTRUED OR INTERPRETED AS A WAIVER OF GOVERNMENTAL IMMUNITY.

COMPANY AND CITY ARE RELYING ON THEIR OWN JUDGMENT. EACH PARTY HAD THE OPPORTUNITY TO DISCUSS THIS AGREEMENT WITH COMPETENT LEGAL COUNSEL PRIOR TO ITS EXECUTION.

ARTICLE XI. GOVERNMENTAL IMMUNITY

By executing this agreement CITY is not waiving its right of governmental immunity. CITY is retaining its immunity from suit. CITY is not granting consent to be sued by legislative resolution or action.

THERE IS NO WAIVER OF GOVERNMENTAL IMMUNITY.

ARTICLE XII. NO THIRD-PARTY BENEFICIARIES

CITY'S approval of this agreement does not create a third-party beneficiary. There is no third-party beneficiary to this Agreement. No person or entity who is not a party to this Agreement shall have any third-party beneficiary or other rights hereunder.

ARTICLE XIII. RELEASE

NOTWITHSTANDING ANY OTHER PROVISIONS, COMPANY HEREBY RELEASES, ACQUITS, RELINQUISHES AND FOREVER DISCHARGES CITY, CITY'S EMPLOYEES AND OFFICERS, FROM ANY AND ALL DEMANDS, CLAIMS, DAMAGES, OR CAUSES OF ACTION OF ANY KIND WHATSOEVER WHICH COMPANY HAS OR MIGHT HAVE IN THE FUTURE, INCLUDING BUT NOT LIMITED TO BREACH OF AGREEMENT, QUANTUM MERUIT, CLAIMS UNDER

THE DUE PROCESS AND TAKINGS CLAUSES OF THE TEXAS AND UNITED STATES CONSTITUTIONS, TORT CLAIMS, OR CITY'S NEGLIGENCE.

ARTICLE XIV. GENERAL PROVISIONS

A. Waiver. No waiver by CITY of a breach of any covenant, condition, or restriction of this Agreement shall be construed or held to be a waiver of any succeeding or preceding breach of the same or any other covenant, condition, or restriction contained in this Agreement.

B. Governing Law and Venue. This Agreement shall be governed by the laws of the State of Texas. All performance and payment made pursuant to this Agreement shall be deemed to have occurred in Midland County, Texas. Exclusive venue for any claims, suits or any other action arising from or connected in any way to this Agreement or the performance of this Agreement shall be in Midland County, Texas. The obligations and undertakings of each of the parties to this Agreement shall be deemed to have occurred in Midland County, Texas. This Agreement shall be governed by, interpreted, enforced and construed under the laws of the State of Texas. The laws of the State of Texas shall govern, construe and enforce all the rights and duties of the parties, including but not limited to tort claims and any and all contractual claims or disputes, arising from or relating in any way to the subject matter of this Agreement, without regard to conflict of laws and rules that would direct application of the laws of another jurisdiction.

C. Notice. Any notice or demand that shall be made regarding this Agreement, shall be made in writing and delivered either in person or by certified or registered mail. Notice by mail shall be complete upon deposit of the paper, postage prepaid, in a post office or official depository under the care and custody of the United States Postal Service addressed as follows:

If to CITY: City Manager's Office
P.O. Box 1152
Midland, Texas 79702

If to COMPANY: Enprotec/Hibbs & Todd, Inc. dba Geotec Labs
402 Cedar Street
Abilene, Texas 79601

The parties hereto may change the above-designated addresses by giving notice pursuant to the terms of this Section.

D. Severability. In case any one or more of the provisions contained in this Agreement shall for any reason be held to be invalid, illegal, or unenforceable in any respect, this invalidity, illegality, or unenforceability shall not affect any other provision of the Agreement, and this Agreement shall be construed as if the invalid, illegal, or unenforceable provision had never been contained herein.

E. Use of Language. Words in the singular shall be held to include the plural, unless the context otherwise requires.

F. Amendments, Modifications, Alterations. No amendment, modification, or alteration of the terms of this Agreement shall be binding unless it is in writing, dated subsequent to the date of this Agreement, and duly executed by the parties to this Agreement.

G. Counterparts. This Agreement may be executed in multiple counterparts, each of which shall be deemed as original, and all of which shall constitute one and the same instrument.

H. Federal Wage Requirements. If applicable, the Davis-Bacon Act, 29 CFR 5.5, and any related acts or regulations are hereby incorporated by reference and made a part of this Agreement, and all terms and requirements under said laws, by such incorporation, are made terms and requirements of this Agreement, to which the parties to this Agreement have agreed to be bound.

I. Notice of Alleged Breach; Statutory Prerequisites. As a condition precedent to filing suit for alleged damages incurred by an alleged breach of an express or implied provision of this Agreement, COMPANY or his legal representative, shall give the City Manager, or any other reasonable official of CITY, notice in writing (consisting of one original and seven copies of notice attached to a copy of this Agreement) of such damages, duly verified, within one-hundred fifty (150) days after the same has been sustained. The discovery rule does not apply to the giving of this notice. The notice shall include when, where and how the damages occurred, the apparent extent thereof, the amount of damages sustained, the amount for which COMPANY will settle, the physical and mailing addresses of COMPANY at the time and date the claim was presented and the physical and mailing addresses of COMPANY for the six months immediately preceding the occurrence of such damages, and the names and addresses of the witnesses upon whom COMPANY relies to establish its claim; and a failure to so notify the City Manager within the time and manner provided herein shall exonerate, excuse and except CITY from any liability whatsoever. CITY is under no obligation to provide notice to COMPANY that COMPANY'S

notice is insufficient. CITY reserves the right to request reasonable additional information regarding the claim. Said additional information shall be supplied within thirty (30) days after receipt of notice.

The statutory prerequisites outlined herein constitute jurisdictional requirements pursuant to Section 271.154 of the Texas Local Government Code and Section 311.034 of the Texas Government Code. Notwithstanding any other provision, COMPANY'S failure to comply with the requirements herein shall perpetually bar COMPANY'S claim for damages under Chapter 271 of the Texas Local Government Code, and Section 311.034 of the Texas Government Code, regardless if CITY has actual or constructive notice or knowledge of said claim or alleged damages. COMPANY agrees that the requirements of this entire Agreement are reasonable.

J. PROMPT PAY ACT - CITY and COMPANY agree that Texas Government Code, Chapter 2251, Payment for Goods and Services (the "Prompt Pay Act") does not waive governmental immunity.

K. Compliance. – COMPANY agrees that it shall comply with Texas Government Code Section 2252.908, as amended. COMPANY agrees that it shall comply with Texas Local Government Code Section 176.006, as amended.

L. Anti-Boycott Statutes. To the extent that Tex. Gov't Code §§ 2271.002 and 2274.002 apply to this Agreement, COMPANY hereby verifies that:

- COMPANY does not boycott Israel and will not boycott Israel during the term of this Agreement;
- COMPANY does not boycott energy companies and will not boycott energy companies during the term of this Agreement; and
- COMPANY does not have a practice, policy, guidance, or directive that discriminates against a firearm entity or firearm trade association and will not discriminate during the term of this Agreement against any firearm entity or firearm trade association.

If Tex. Gov't Code § 2270.002 does not apply to this Agreement, such verification is not required, and COMPANY shall be deemed to have not made such verification.

M. Records Retention and Production of Information. To the extent that this Agreement is a contract described by Tex. Gov't Code § 552.371, COMPANY shall: (i) preserve all contracting information related to the Agreement as provided by the records retention requirements applicable to CITY for the duration of the contract; (ii) promptly provide to CITY

any contracting information related to the Agreement that is in the custody or possession of COMPANY on request of CITY; and (iii) on completion of the Agreement, either (a) provide at no cost to CITY all contracting information related to the Agreement that is in the custody or possession of COMPANY, or (b) preserve the contracting information related to the Agreement as provided by the records retention requirements applicable to CITY.

N. Public Information. To the extent that this Agreement is a contract described by Tex. Gov't Code § 552.371, COMPANY agrees as follows in accordance with Tex. Gov't Code § 552.372(b): The requirements of Subchapter J, Chapter 552, Government Code, may apply to this contract, and the contractor or vendor agrees that the contract can be terminated if the contractor or vendor knowingly or intentionally fails to comply with a requirement of that subchapter.

O. Conflict of Terms. If a conflict of terms or language exists between: (i) any of the provisions of this Agreement; and (ii) any of the provisions contained in any exhibit(s) attached to this Agreement, precedence shall be given to the provisions of this Agreement. For the avoidance of any doubt, the provisions contained in this Agreement shall supersede any and all conflicting provisions contained in any exhibit(s) attached hereto. Furthermore, the Parties acknowledge and agree that any provision contained in an exhibit(s) attached to this Agreement that imposes an additional express or implied obligation on CITY is hereby made void and of no force or effect. CITY's sole and exclusive obligations under this Agreement are contained in the provisions of this Agreement that precede the signature page(s), which evidences the Parties' execution and acceptance hereof.

P. Iron or Steel Products Statute. Company agrees that all iron or steel products produced through a manufacturing process and used in the project that is the subject of this Agreement shall be produced in the United States in accordance with Government Code § 2252.202, et seq., as amended.

Q. Interpretation. By executing this Agreement, the Parties acknowledge and agree that this Agreement shall not be interpreted or construed against any Party solely because such Party or its legal counsel drafted this Agreement. The Parties have read, understood, and approve of the language and terms set forth herein.

[Signature Page(s) Follows]

EXECUTED IN DUPLICATE the day and year first above mentioned.

THE CITY OF MIDLAND, TEXAS

_____
Morris Williams Jr., Interim City Manager

ATTEST:

_____
Marcia Bentley-German, City Governance Officer/City Secretary

APPROVED AS TO FORM ONLY:

_____
John Ohnemiller, City Attorney

COMPANY:

By: _____

Name:_____

Title: _____

STATE OF _____§
§
COUNTY OF _____§

BEFORE ME, the undersigned authority, on this ____ day of _____, 2023 personally appeared,_____, an officer of Enprotec/Hibbs & Todd, Inc. dba Geotec Labs, known to me to be the person and official whose name is subscribed to the forgoing instrument, and acknowledged to me that he executed the same as the act and deed of said corporation, for the purposes and consideration therein expressed, and in the capacity therein stated.

GIVEN UNDER MY HAND AND SEAL OF OFFICE this the __day of _____, 2023.

_____
Notary Public, State of Texas

Request for Qualifications
For
23003764
Construction Material Testing Service

General Scope of Work

The project scope is to collect materials and conduct materials testing during the construction phase of capital improvement projects. Expected testing shall be conducted on the following areas, but not limited to, embankment, flexible base, prime coat, tack coat, seal coat and flowable backfill. The frequency of testing shall be dependent on approved engineering practices specific to each testing procedure used.

The project will be titled: Construction Materials Testing – Capital Improvement Projects. A total of three hardcopies and one electronic copy (in PDF format) of the statement of qualifications must be received no later than 2:00 P. M. on June 14, 2023 at:

City of Midland
Purchasing Office
Attn: Erika Martinez, Purchasing Manager
300 N. Loraine St. Suite 220
Midland, TX 79701

The City of Midland uses its own professional services agreement in contracting for professional services. The characteristics of that agreement include: 1.) An indemnification provision holding the City harmless from negligence on the part of the professional, professional's employees, agents or consultants; 2.) A requirement that the service provider comply with all Federal, State and local requirements and is responsible for obtaining all applicable permits, licenses and reviews relating to the project; 3.) A requirement that the service provider carry and show proof of comprehensive general liability insurance, including contractual liability and worker's compensation as required by law and the City of Midland. The service provider must be willing to sign the contract "as is" and without modifications.

The City of Midland expressly reserves the right to accept or reject any and all statements of qualifications submitted; and is under no legal requirement to execute a resulting contract on the basis of its advertisement and intends the material provided only as a means of identifying the various consultant alternatives.

Qualifications will be evaluated by a committee of City of Midland staff. This committee will select the top-rated prospective firms whose response best demonstrate the competence and qualifications needed to perform the services required for this project.

If so desired by the committee, each prospective firm will be given the opportunity to make a presentation to the selection committee, followed by questions by the selection committee. Notice will be given as to the time and place of the presentation (if needed).

Based on the score of the submitted qualifications (plus the presentation by each prospective firm - if needed), the selection committee will select the three (3) most qualified firms for the contract. The City of Midland and the selected firms will then enter fee negotiations for the project. In the event that the City of Midland and the first selected firms can't agree on reasonable fees for the project, negotiations will be stopped, and the next most qualified firm will be selected to enter into fee negations for the project.

This request for Statement of Qualifications does not commit the City of Midland to pay any costs prior to execution of a contract. Issuance of this material in no way obligates the City of Midland to award a contract or to pay any costs incurred in the preparation of a response. The City of Midland specifically reserves the right to vary all provisions of a contract set forth at any time prior to execution of a contract where it deems it to be in the best interest of the City of Midland.

Any inquiries relating to this request for statement of qualifications should be directed to Bobby Wojciechowski, by telephone at (432) 685–7519. In the event it becomes necessary to revise any part of this RFQ, addenda will be provided to all consultants who responded to the RFQ prior to the deadline.

Waiver

WAIVER OF CLAIMS ARISING FROM THE COMPETITIVE REQUEST FOR QUALIFICATION PROCESS OF AWARD OF CONTRACT

BY SUBMITTING A STATEMENT OF QUALIFICATIONS, EACH SUBMITTER AGREES TO AND DOES HEREBY WAIVE ANY CLAIM THE SUBMITTER HAS OR MAY HAVE AGAINST THE CITY AND/OR THE CITY'S EMPLOYEES, AGENTS AND OFFICERS, ARISING OUT OF OR IN ANY WAY CONNECTED WITH THE FOLLOWING:

1. THE ADMINISTRATION, EVALUATION OR RECOMMENDATION OF ANY STATEMENT OF QUALIFICATIONS.

2. WAIVER OR DELETION OF ANY OF THE REQUIREMENTS UNDER THE STATEMENT OF QUALIFICATIONS OR THE CONTRACT DOCUMENTS.

3. ACCEPTANCE OR REJECTION OF ANY STATEMENT OF QUALIFICATION.

4. AWARD OF CONTRACT.

By submitting a Statement of Qualifications, the submitter acknowledges that he or she understands all terms of the proposal documents and consents to the competitive selection process and the possibility of a negative assessment. By submitting a Statement of Qualifications, the submitter acknowledges and agrees that there was and is no disparity of bargaining power between the submitter and the City.

The submitter agrees that this is the intentional relinquishment of the above listed presently existing known rights.

WAIVER OF ATTORNEY FEES

BY SUBMITTING A STATEMENT OF QUALIFICATIONS, EACH SUBMITTER AGREES TO WAIVE AND DOES HEREBY WAIVE ANY CLAIM THE SUBMITTER HAS OR MAY HAVE AGAINST THE CITY AND/OR ITS RESPECTIVE EMPLOYEES AND REPRESENTATIVES, FOR THE AWARD OF ATTORNEY FEES, ARISING OUT OF OR IN CONNECTION WITH THE ADMINISTRATION, EVALUATION, OR RECOMMENDATION OF ANY STATEMENT OF QUALIFICATIONS, WAIVER OF ANY REQUIREMENTS UNDER THIS RFP, ACCEPTANCE OR REJECTION OF ANY STATEMENT OF QUALIFICATIONS, AND AWARD OF THE CONTRACT. BY SUBMITTING A STATEMENT OF QUALIFICATIONS, THE SUBMITTER SPECIFICALLY WAIVES ANY RIGHT TO RECOVER OR BE PAID ATTORNEY'S FEES FROM THE CITY OR ANY OF THE CITY'S EMPLOYEES AND REPRESENTATIVES UNDER ANY OF THE PROVISIONS OF THE TEXAS UNIFORM DECLARATORY JUDGMENTS ACT (TEXAS CIVIL PRACTICE AND REMEDIES CODE, SECTION 37.001, ET. SEQ. AS AMENDED).

The submitter agrees that this is the intentional relinquishment of a presently existing known right.

By execution and submission of a Statement of Qualifications under this RFQ, the submitter hereby represents and warrants to the City that the submitter has read and understands the RFQ and the Statement of Qualifications is submitted in accordance with this RFQ. The submitter acknowledges that it understands all terms within the proposal documents, which include the waiver provisions, and that it had the right to consult with counsel regarding all of the above documents.

This section shall not be construed as a Waiver of Sovereign

Immunity. SOVEREIGN IMMUNITY

The City is not waiving its right of sovereign immunity. The City is retaining its immunity from suit. The City is not granting consent to be sued by legislative resolution or action.

The City of Midland assures that no person shall on the grounds of race, color, national origin, sex, age, disability or income as provided by Title VI of the Civil Rights Act of 1964 and related authorities, be excluded from participation in, be denied the benefits of, or be otherwise subjected to discrimination under any USDOT sponsored program or activity.

The City of Midland further assures every effort will be made to ensure non-discrimination in all of its programs and activities, whether those programs and activities are federally funded or not. Consideration will be given to respondents with DBE eligibility in the selection process.

On-line responses will not be allowed for this solicitation.

Delivery of Submittals: Bid packets must be received in the City Secretary's Office no later than designated bid date and time. Bidders are responsible for the means of timely delivering the bid packet. Delays due to any instrumentality used to transmit the bid packet (e.g., delay occasioned by a bidder, City's internal mailing system, etc.) are the sole responsibility of the bidder. **Late bid packets will not be accepted under any circumstances.**

Please print these documents and submit your bid in a sealed envelope to:

Mailing Address:

The City Secretary's Office
City of Midland
P. O. Box 1152
Midland, TX 79702

OR

Physical Address:

The City Secretary's Office
City of Midland
300 N. Loraine, Suite 330
Midland, TX 79701

ATTENTION: The deadline for submitting additional questions is 72 working hours before the bid opening date. Questions submitted before the Noon deadline will be included in the Addendum. Questions submitted after the Noon deadline will not receive any additional information and will instead only be directed to the information already provided.

EXAMPLE

TASK ORDER NO. __

This Task Order pertains to an Agreement by and between City of Midland, Texas, ("CITY"), and _____ ("COMPANY"), dated _____, 20___, ("the Agreement"). COMPANY shall perform services on the project described below as provided herein and in the Agreement. This Task Order shall not be binding until it has been properly signed by both parties. Upon execution, this Task Order shall supplement the Agreement as it pertains to the project described below.

TASK ORDER NUMBER: ___
PROJECT NAME: _____

PART 1.0 PROJECT DESCRIPTION:

PART 2.0 SCOPE OF SERVICES TO BE PERFORMED BY COMPANY ON THE PROJECT:

PART 3.0 CITY'S RESPONSIBILITIES:

PART 4.0 PERIODS OF SERVICE:

PART 5.0 PAYMENTS TO COMPANY:

PART 6.0 OTHER:

This Task Order is executed this _____ day of _____, 20___.

CITY OF MIDLAND, TEXAS		_____	
"CITY"		"COMPANY"	
BY:	_____	BY:	_____
NAME:	Morris Williams, Jr.	NAME:	_____
TITLE:	Interim City Manager	TITLE:	_____
ADDRESS:	P.O. Box 1152	ADDRESS:	_____
	Midland, TX 79702		_____

IMPORTANT NOTICE

Conflict Of Interest Reporting Requirements

Compliance with LOCAL GOVERNMENT CODE TITLE 5. MATTERS AFFECTING PUBLIC OFFICERS AND EMPLOYEES SUBTITLE C. MATTERS AFFECTING PUBLIC OFFICERS AND EMPLOYEES OF MORE THAN ONE TYPE OF LOCAL GOVERNMENT CHAPTER 176. DISCLOSURE OF CERTAIN RELATIONSHIPS WITH LOCAL GOVERNMENT OFFICERS; PROVIDING PUBLIC ACCESS TO CERTAIN INFORMATION.

Form CIQ: This questionnaire reflects changes made to the law by H.B. 23, 84th Leg., Regular Session. This questionnaire shall be filed in accordance with Chapter 176, Local Government Code, by a vendor who has a business relationship as defined by Section 176.001(1-a) with a local governmental entity and the vendor meets requirements under Section 176.006(a). By law this questionnaire must be filed with the records administrator of the local governmental entity not later than the 7th business day after the date the vendor becomes aware of facts that require the statement to be filed. See Section 176.006(a-1), Local Government Code. A vendor commits an offense if the vendor knowingly violates Section 176.006, Local Government Code. An offense under this section is a misdemeanor.

Bidders are responsible for filing Conflict of Interest form "CIQ" in accordance with the above referenced statute. Failure to do so is a class C Misdemeanor. Contracts or Purchase Orders awarded to a vendor that has violated this law is subject to termination at such time that the violation is discovered with no recourse to the City of Midland. The bidder will be subsequently removed from the bidders list for a minimum of one year.

When there is no known conflict of interest as defined by the statute, it is not necessary to file/submit the Form CIQ. The form must be submitted if a conflict is subsequently discovered.

By submitting a response to this request, vendor represents that it complies with the requirements of Chapter 176 of the Texas Local Government Code.

For a current list of the local government officers go to: http://www.midlandtexas.gov/

Upon completion of the form, sign and submit with bid or mail to:

City of Midland
Attn: City Secretary
PO Box 1152
Midland, Texas 79702

CONFLICT OF INTEREST QUESTIONNAIRE

FORM CIQ

For vendor doing business with local governmental entity

This questionnaire reflects changes made to the law by H.B. 23, 84th Leg., Regular Session.

This questionnaire is being filed in accordance with Chapter 176, Local Government Code, by a vendor who has a business relationship as defined by Section 176.001(1-a) with a local governmental entity and the vendor meets requirements under Section 176.006(a).

By law this questionnaire must be filed with the records administrator of the local governmental entity not later than the 7th business day after the date the vendor becomes aware of facts that require the statement to be filed. *See* Section 176.006(a-1), Local Government Code.

A vendor commits an offense if the vendor knowingly violates Section 176.006, Local Government Code. An offense under this section is a misdemeanor.

OFFICE USE ONLY

Date Received

1 **Name of vendor who has a business relationship with local governmental entity.**

2 ☐ **Check this box if you are filing an update to a previously filed questionnaire.** (The law requires that you file an updated completed questionnaire with the appropriate filing authority not later than the 7th business day after the date on which you became aware that the originally filed questionnaire was incomplete or inaccurate.)

3 **Name of local government officer about whom the information is being disclosed.**

_____

Name of Officer

4 **Describe each employment or other business relationship with the local government officer, or a family member of the officer, as described by Section 176.003(a)(2)(A). Also describe any family relationship with the local government officer. Complete subparts A and B for each employment or business relationship described. Attach additional pages to this Form CIQ as necessary.**

A. Is the local government officer or a family member of the officer receiving or likely to receive taxable income, other than investment income, from the vendor?

☐ Yes ☐ No

B. Is the vendor receiving or likely to receive taxable income, other than investment income, from or at the direction of the local government officer or a family member of the officer AND the taxable income is not received from the local governmental entity?

☐ Yes ☐ No

5 **Describe each employment or business relationship that the vendor named in Section 1 maintains with a corporation or other business entity with respect to which the local government officer serves as an officer or director, or holds an ownership interest of one percent or more.**

6 ☐ Check this box if the vendor has given the local government officer or a family member of the officer one or more gifts as described in Section 176.003(a)(2)(B), excluding gifts described in Section 176.003(a-1).

7

_____ _____

Signature of vendor doing business with the governmental entity Date July 11, 2023

CONFLICT OF INTEREST QUESTIONNAIRE
For vendor doing business with local governmental entity

A complete copy of Chapter 176 of the Local Government Code may be found at http://www.statutes.legis.state.tx.us/Docs/LG/htm/LG.176.htm. For easy reference, below are some of the sections cited on this form.

Local Government Code § 176.001(1-a): "Business relationship" means a connection between two or more parties based on commercial activity of one of the parties. The term does not include a connection based on:

(A) a transaction that is subject to rate or fee regulation by a federal, state, or local governmental entity or an agency of a federal, state, or local governmental entity;

(B) a transaction conducted at a price and subject to terms available to the public; or

(C) a purchase or lease of goods or services from a person that is chartered by a state or federal agency and that is subject to regular examination by, and reporting to, that agency.

Local Government Code § 176.003(a)(2)(A) and (B):

(a) A local government officer shall file a conflicts disclosure statement with respect to a vendor if:

***

(2) the vendor:

(A) has an employment or other business relationship with the local government officer or a family member of the officer that results in the officer or family member receiving taxable income, other than investment income, that exceeds $2,500 during the 12-month period preceding the date that the officer becomes aware that

(i) a contract between the local governmental entity and vendor has been executed; or

(ii) the local governmental entity is considering entering into a contract with the vendor;

(B) has given to the local government officer or a family member of the officer one or more gifts that have an aggregate value of more than $100 in the 12-month period preceding the date the officer becomes aware that:

(i) a contract between the local governmental entity and vendor has been executed; or

(ii) the local governmental entity is considering entering into a contract with the vendor.

Local Government Code § 176.006(a) and (a-1)

(a) A vendor shall file a completed conflict of interest questionnaire if the vendor has a business relationship with a local governmental entity and:

(1) has an employment or other business relationship with a local government officer of that local governmental entity, or a family member of the officer, described by Section 176.003(a)(2)(A);

(2) has given a local government officer of that local governmental entity, or a family member of the officer, one or more gifts with the aggregate value specified by Section 176.003(a)(2)(B), excluding any gift described by Section 176.003(a-1); or

(3) has a family relationship with a local government officer of that local governmental entity.

(a-1) The completed conflict of interest questionnaire must be filed with the appropriate records administrator not later than the seventh business day after the later of:

(1) the date that the vendor:

(A) begins discussions or negotiations to enter into a contract with the local governmental entity; or

(B) submits to the local governmental entity an application, response to a request for proposals or bids, correspondence, or another writing related to a potential contract with the local governmental entity; or

(2) the date the vendor becomes aware:

(A) of an employment or other business relationship with a local government officer, or a family member of the officer, described by Subsection (a);

(B) that the vendor has given one or more gifts described by Subsection (a); or

(C) of a family relationship with a local government officer.

Form provided by Texas Ethics Commission www.ethics.state.tx.us Revised 1/1/2021

STATEMENT OF QUALIFICATIONS

RFQ FOR 23003764 CONSTRUCTION MATERIAL TESTING SERVICES

MIDLAND

JUNE 14, 2023








Enprotec | Hibbs & Todd

Abilene I Lubbock I Granbury
PE Firm Registration No. 1151
PG Firm Registration No. 50103
RPLS Firm Registration No. 10011900

Corporate Headquarters
402 Cedar Street
Abilene, Texas 79601
T: (325) 698-5560
F: (325) 690-3240

www.e-ht.com

Enprotec | Hibbs & Todd

June 14, 2023

City of Midland
Attn: Erika Martinez
Purchasing Manager
300 N. Loraine Street, Suite 220
Midland, Texas 79701

Re: RFQ for 23003764 Construction Material Testing Services

Dear Ms. Martinez:

Enprotec / Hibbs & Todd, Inc. (eHT) is pleased to submit the qualifications of our firm to the City of Midland (City) for consideration to provide construction materials testing services during the construction phase of capital improvement projects. eHT appreciations our on-going relationship with the City and we look forward to assisting you with these projects.

Should additional information be required, please don't hesitate to contact me at (325) 698-5560 or scott.yungblut@e-ht.com.

Sincerely,
Enprotec / Hibbs & Todd, Inc.

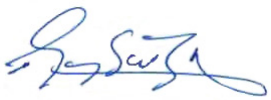

Scott Yungblut, PE
Vice President

QUALIFICATIONS

eHT Capabilities

Over the past 33 years, Enprotec / Hibbs & Todd, Inc. (eHT) has established itself as a premier engineering firm in the State of Texas. eHT, a corporation, has substantial experience managing planning, design and construction projects throughout Texas.

Our client service commitment to be a "user-friendly" company, providing clear, informative communication and quality work, is one of our strengths. We feel our firm is the "right-size" to offer a small firm's personal touch, yet has the breadth of a larger firms' service. We develop relationships with clients that are valuable and productive.

Construction Materials Testing

Geotec Labs, an in-house branch, is a fully operating and equipped geotechnical and materials testing laboratory. Most standard soil and construction materials tests can be performed at our laboratory. Our staff utilizes state-of-the-art equipment and instrumentation. Our procedures and methodologies conform to federal and state standards such as American Standards and Testing Methods (ASTM), TEX and American Concrete Institute (ACI). Our services include:

- Material Sampling
- Concrete Mix Design
- Concrete Cylinders and Beams
- Slump Testing
- Air Content Testing
- Plant Inspection
- Moisture Contents
- Atterberg Limits Testing
- Sieve Analysis
- Specific Gravity and Absorption
- Proctor Information
- Field Density Testing
- Core Sampling
- Wet Ball Mill Testing
- Soundness Testing
- Abrasion Testing
- CBR Testing
- Hot Mix Design

Geotechnical Engineering

Our geotechnical investigations provide data necessary to evaluate a wide variety of geotechnical issues. We use truck-mounted drilling units, in-house testing of soil and construction materials and the latest in field sampling equipment. These investigations help establish recommendations for foundation types, depths, allowable loadings and construction observation requirements for all types of structures.

Resources

High Senior Staff Interaction
Regional Texas Offices
Diverse Expertise
Low Overhead
Engineering-Science-Operations Mix
System Operators on Staff

Emphasis on Relationships

Regulatory Agency Relationships
Funding Agency Relationships
Client Commitment
Experienced Attention to Project Needs and Goals
Partnership, Advocacy and Planning



CAPACITY TO PERFORM

Organizational Structure

Key Personnel are listed herein. Additional personnel are available as needed.

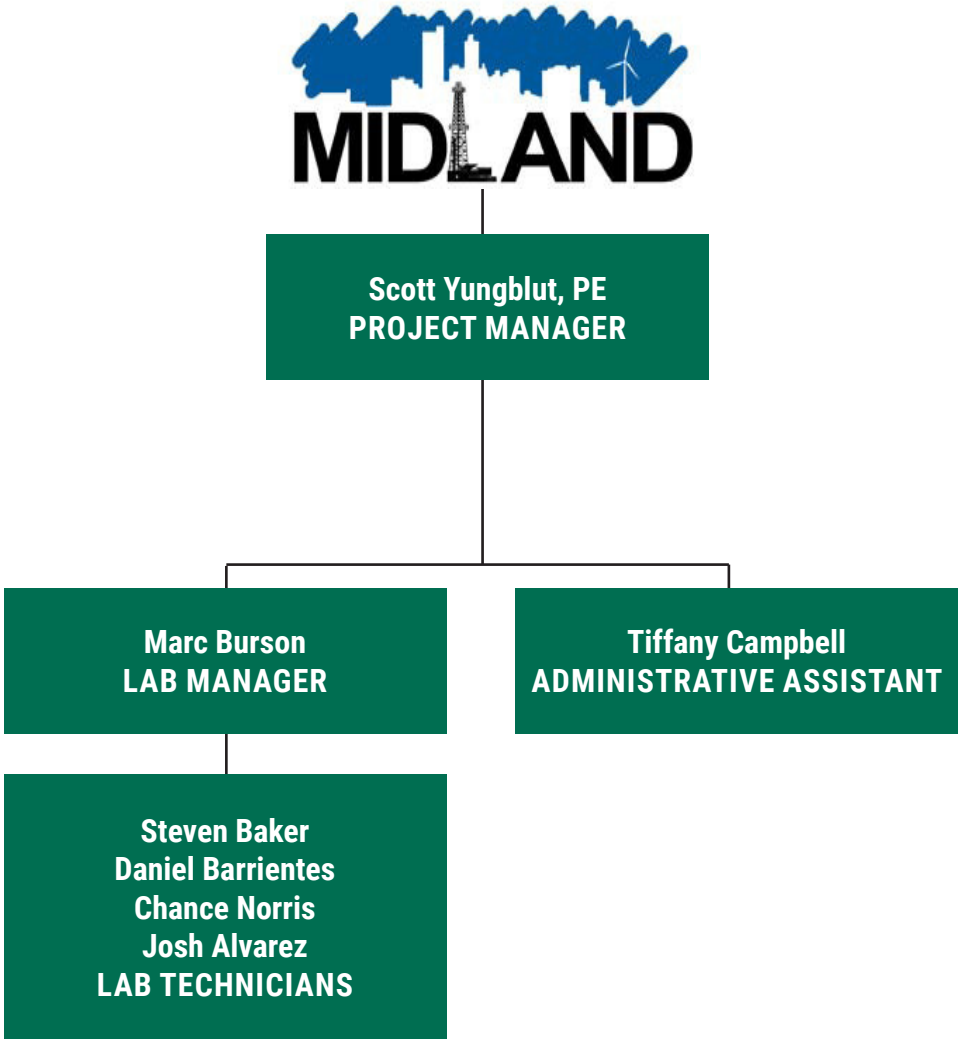

Labor Resources

eHT can be supplemented and supported by other professionals within the company to handle peaks and illness. We do not anticipate substantial attrition. We have a very stable and cohesive group of employees. In the event that the Principal-in-Charge or Project Manager are not available during the performance period, their responsibilities will be assumed by other officers of eHT.

eHT is prepared to increase staff as necessary to complete projects to the satisfaction and expectations of the client. This is a high priority project for our company and we will not accept additional projects that could adversely affect our ability to meet the demands of this project.

Scott Yungblut, PE
Project Manager



PROFESSIONAL EXPERIENCE

Mr. Yungblut has 27 years of experience in performing engineering analysis and design on geotechnical and construction materials testing projects throughout Texas, Louisiana, Arkansas and Oklahoma. He supervises and manages eHT's soil and materials testing laboratory responsibilities including proposal preparation, field investigation, field and laboratory analysis, report preparation and construction quality assurance and quality control.

The eHT laboratory staff utilizes state-of-the-art equipment and instrumentation. eHT procedures and methodologies conform to federal and/or state standards such as American Standards and Testing Methods (ASTM), TxDOT and American Concrete Institute (ACI).

PROJECT EXPERIENCE

Geotechnical Expertise

Mr. Yungblut's geotechnical expertise includes:

- Subsurface Exploration
- Soil Property Evaluations
- Shallow and Deep Foundation Design Recommendations
- Foundations on Expansive Soils
- Pavement Design and Evaluation
- Roadway and Parking Lot Upgrades
- Airfield Pavements

Notable Civil Projects

- Abilene ISD: Various new schools and athletic facilities
- City of Midland Monopole Tower Sites
- Lamesa High School Improvements
- Hampton Inn & Suites, Lubbock
- Abilene Fire Training Academy
- Burger King/Popeyes, Midland
- Chisolm Truck Stop, Lubbock
- Hendrick Home for Children, Main Building, Abilene
- Avis Lube 126, Midland

EDUCATION

Bachelor of Science, Civil Engineering
University of Texas at Arlington, 1993

REGISTRATIONS

Registered Professional Engineer – Texas #85640, 1999

CERTIFICATIONS/EDUCATION

Concrete Evaluation and Repair I & II, 2011

Retaining Wall Design, 2010

Shrink Swell Soils, Texas A&M

Forensics Engineering Conference, 2007

Texas Accessibility Academy, 2005

TxDOT HotMix (HMACP) Inspector, 2003

ParSales Training, 1996

Dale Carnegie Leadership Course, 1995

PROFESSIONAL ENDEAVORS

Enprotec / Hibbs & Todd, Inc.
Vice President
Abilene, Texas
2000 - present

Giles Engineering Associates
Project Engineer
Dallas, Texas
1997 - 2000

Professional Service Industries, Inc.
Project Manager, Department Manager, Technician, Geotechnical Services
Dallas, Texas
1994 - 1997

Marc Burson
Lab Manager



PROFESSIONAL EXPERIENCE

Mr. Burson is the Senior Lab Manager for Geotec Labs, a subsidiary division of Enprotec / Hibbs & Todd, Inc. (eHT). He oversees all lab operations throughout the organization. With over 39 years of lab management experience, Mr. Burson is a valuable asset to the overall operations of the eHT laboratories. He brings a wealth of technical expertise to the operation that is rarely found in most testing labs. He constantly monitors lab operations to ensure accuracy of data and testing procedures and to ensure the most accurate reporting of materials testing possible.

PROJECT EXPERIENCE

- Abilene Regional Airport, Paving Projects
- School projects including: Abilene ISD, Wylie ISD, Ira ISD, Colorado City ISD, Loraine ISD, Goldthwaite ISD, Palo Pinto ISD
- Texas Department of Criminal Justice Plant
- John Middleton Unit, Abilene; John Walsh Unit, Colorado City; French Robertson Addition, Abilene
- Substance Abuse Treatment Facility, Breckenridge
- Garment Factory Walsh Addition, Colorado City
- Male Mode | State Jail Facility, Colorado City
- General Psychiatric Facility, Lubbock
- Boxed Beef Addition, Amarillo
- O.H. Ivie Reservoir, Coleman County
- Elm Creek Reservoir, Winters
- Ballinger Lake, Ballinger
- Firestone Test Track, Fort Stockton
- Multiple projects at Dyess AFB and Goodfellow AFB
- Water and Wastewater Treatment Plants, Sweetwater
- Numerous Improvements at the City of Abilene Water and Wastewater Treatment Plants, Abilene
- Possum Kingdom Water Treatment Plant
- Abilene Christian University Football Stadium
- Wylie Performing Arts Center
- Dovetail Apartment Development, Lubbock
- Fullenwider Dodge, Snyder
- City of Abilene Fire Station #4
- TPWD Lake Brownwood Wastewater Treatment Plant

EDUCATION

Bachelor of Science, Agricultural Education, Tarleton State University, 1976

PROFESSIONAL/CIVIC ORGANIZATIONS

Abilene Bow Hunters, Vice President

West Texas Rehab, Lamb and Goat Committee, Board Member

Taylor County Livestock Show, Superintendent

CERTIFICATIONS/EDUCATION

Certified Engineering Technician #69349

Level 1A #972, TxDOT, Austin, TX, 1996

Level III #069349, National Institute for Certification in Engineering Technologies

Soil Compaction, Budlingert Assoc., Austin, TX

Grade I, National Concrete Institute

PROFESSIONAL ENDEAVORS

Enprotec / Hibbs & Todd, Inc.
(Geotec Labs) Senior Lab Manager
Abilene, Texas
1991 - present

Trinity Engineering Testing Corp.
Laboratory Supervisor
Abilene, Texas
1979 - 1991
Laboratory Technician
Abilene, Texas
1977 - 1979

EXPERIENCE

Construction Materials Testing

- Pump Station, City of Midland
- Water and Wastewater Utilities, City of Midland
- Abilene Christian School, High School Addition, Sedalco Construction
- San Angelo Water Treatment Plant, DN Tanks
- Callahan County Courthouse, JC Stodder
- Sweetwater USG, Wolverine Building Group
- Camp Bowie Readiness Center, SMR Construction
- Wind Farm, IES
- Lakeview, Wilks Construction
- Hardin-Simmons New Dorms, Crowe Group
- Five Points Business Park, Bontke Construction
- McMurry Student Center, McMurry University
- Wastewater Treatment Plant #2, Acton Municipal Utility District
- Water System Improvements, Parker County Special Utility District
- O'Reilly Auto Parts, Solid Ground Consulting Engineers
- Marigold Street, City of Abilene
- Abilene Hotel and Convention Center, Garfield Public
- Fisher County Hospital, Teinert Commercial
- Shotwell Stadium, Abilene ISD
- Valley View, City of Glen Rose
- Sierra Sunset Apartments, Tigris
- Sweetwater Housing Authority, Covar Construction
- Lometa Water Treatment Plant, Corix Utilities
- Loop and Maple, AEP
- Water Treatment Plant, City of Stamford
- Moody Coliseum, Abilene Christian University
- Roby School, Gallagher Construction Services
- Allen Ridge, Abilene Christian University
- Wastewater Treatment Plant No. 1, Acton Municipal Utility District
- Water Treatment Plant, City of Big Lake
- Baylor Drive, City of Abilene
- Intermediate School, Wylie ISD
- The Lift, Abilene ISD
- Hardin-Simmons University Apartments, Crowe Group
- Sayles Boulevard, City of Abilene
- Hendrick Home for Children, Teinert Construction
- Water Treatment Plant, City of Eastland
- Water Treatment Plant, City of Granbury
- Water Treatment Plant, City of Eastland
- Park, Street and Paving, City of Breckenridge
- High School Addition, Haskell ISD
- Dyess Memorial, Dyess AFB
- Water Treatment Plant, City of Cisco
- Hamby Water Reclamation Facility, City of Abilene
- Landfill, City of Brownwood
- Sweetwater Wind Farm Tower, IES
- Heritage Park, Raydon
- Harbor Lakes Drive, City of Granbury
- Lake Arrowhead State Park, TPWD
- Tarleton State University, Harendt Construction Group
- Stonewall County Living Center, Teinert
- Nancy Street, City of Glen Rose
- Maryneal Pump Station, Native Services
- Bright Farms, DCOA
- Ground Storage Tank, City of Winters
- Lake Leon Emergency Repairs, HDR

SCHEDULE AND BUDGET

CLIENT	PROJECT	YEAR	SCHEDULE
City of Big Lake	CDBG Water System Improvements	2022	Design and construction schedule met.
City of Big Lake	Wastewater Treatment Plant Expansion	2022	Completed ahead of schedule.
City of Breckenridge	Wastewater Treatment Plant Upgrade	2022	Design and construction schedule met.
City of Huntsville	Wastewater Treatment Plant	2021	Design and construction schedule met.
City of Glen Rose	CDBG Street and Drainage Improvements	2021	Design and construction schedule met.
City of Eden	CDBG Water Line Replacment	2020	Design and construction schedule met.
City of Cisco	Water Treatment Plant	2019	Ahead of schedule by 0.8 months.
Eastland County Water Supply District	CDBG Water Line Improvements	2019	Design and construction schedule met.
City of Cisco	CDBG Sewer System Improvements	2019	Design and construction schedule met.
City of Sweetwater	Water System Improvements	2018	Design and construction schedule met.
City of Stamford	Raw Water Line Replacement	2018	5 months ahead of schedule.
City of Roscoe	Collection System Improvements	2018	Design and construction schedule met.

CLIENT	PROJECT	YEAR	ORIGINAL BUDGET	FINAL COST
City of Alamo	Wastewater Treatment Plant	2022	$11,500,000	$10,187,438
City of Big Lake	Wastewater Treatment Plant Expansion	2022	$6,954,000	$6,887,331
City of Breckenridge	Wastewater Treatment Plant Upgrade	2022	$1,800,000	$1,795,000
City of Huntsville	Wastewater Treatment Plant	2021	$22,559,000	$20,785,247
City of Breckenridge	CDBG Water Line Replacement	2020	$245,131	$243,037
City of Eden	CDBG Water Line Replacement	2020	$210,395	$210,395
Upper Leon River MWD	DWSRF Water Treatment Plant	2020	$13,096,150	$13,047,932
City of Cisco	Water Treatment Plant	2019	$9,000,000	$8,133,573
City of Roma	CDBG Paving Improvements	2019	$243,744	$243,744
City of Stamford	Water System Improvements	2018	$6,067,000	$5,175,639
City of Sweetwater	Water System Improvements	2018	$4,386,000	$4,386,000
City of Winters	CDBG Sewer Improvements	2018	$274,588	$262,406

CITY OF MIDLAND

ADDENDUM # 1

BID # 23003764

TO ALL BIDDERS ON THE SUBJECT BID:

ADDENDUM # 1

DATE: May 5, 2023

The following questions were raised by one or more of the proposers. The answers are provided as a matter of clarification for all proposers as follows:

Q1: Are there any specific requirements for the bid packets? Such as page limit, required tabs etc.?
A1: No, there is no page limit or required tabs for this RFQ.

PLEASE RETURN THIS ADDENDUM WITH YOUR BID BY THE CLOSING DATE.

All other terms and conditions shall remain the same.

Enprotec / Hibbs & Todd, Inc.
Company Name

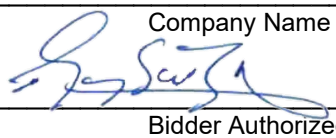

Bidder Authorized Signature

June 9, 2023
Date

Scott Yungblut, PE
Please Print Above Name

(325) 698-5560
Phone

CITY OF MIDLAND

ADDENDUM

BID # 23003764

TO ALL BIDDERS ON THE SUBJECT BID:

ADDENDUM # 2

DATE: June 7, 2023

The following changes have been made to the specifications.

Please incorporate the following into the bid documents:

SELECTION CRITERIA:

The City will select three (3) firms for on-call services to provide continuous services for three (3) years. The City will make its selection from those responding to this RFQ. If deemed necessary by the City, interviews with the firms deemed most qualified, may be conducted. Once a selection is made of the most qualified firms, each chosen firm may be assigned projects. Once work is assigned, the selected firm will be requested to submit a scope of work and cost estimate to perform the specific services. If a mutually satisfactory agreement cannot be reached with the selected professional, negotiations will be terminated with that firm and the negotiation process will be initiated with another qualified firm. This process may be repeated until a mutually satisfactory agreement is reached.

The City maintains the right to terminate the selection process at any time if they deem it is in the best interest of the City. At such time as an agreement is reached, City staff will make a recommendation to the City Council to execute a contract pursuant to the agreement and subject to the availability of funding. The City reserves the right to accept or reject any or all proposals and to accept, in the judgment of the Mayor and City Council, what is the most advantageous proposals. The following criteria will be used to evaluate the qualifications of consultants:

The following criteria will be used to evaluate the qualifications of consultants:

1. Capability to perform the required services for the project: 30%

2. Recent experience on similar projects: 20%

3. Reputation, personal and professional integrity, and competency of the firm: 15%

4. Professional background, availability, and caliber of key personnel to be assigned to this project: 15%

5. Capability to meet schedules or deadlines: 20%

PLEASE RETURN THIS ADDENDUM WITH YOUR BID BY THE CLOSING DATE.

All other terms and conditions shall remain the same.

Enprotec / Hibbs & Todd, Inc.
Company Name

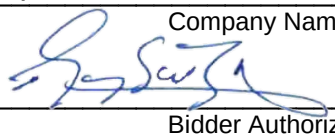

Bidder Authorized Signature

June 9, 2023
Date

Scott Yungblut, PE
Please Print Above Name

(325) 698-5560
Phone

PROFESSIONAL SERVICES AGREEMENT FOR MULTIPLE PROJECTS
23003764-2 Construction Material Testing Services

THIS AGREEMENT is made and effective the 12th day of July 2023, by and between the CITY OF MIDLAND, TEXAS, a municipal corporation, hereinafter called "CITY," and, Terracon Consultants, Inc., hereinafter referred to as "COMPANY."

WHEREAS, CITY desires to retain COMPANY, a professional engineering firm, to provide professional engineering services, architecture services, landscape architecture services, land surveying services, real estate appraising services, and services provided in connection therewith on one or more projects in which the CITY is involved; and

WHEREAS, COMPANY desires to provide such services on such projects as may be agreed from time to time by the parties;

NOW, THEREFORE, in consideration of the mutual covenants contained herein, the parties agree as follows:

ARTICLE I. PURPOSE

The purpose of this Agreement is to state the terms and conditions under which COMPANY shall perform professional engineering services, architecture services, landscape architecture services, land surveying services, real estate appraising services, and services provided in connection therewith for the City of Midland.

ARTICLE II. SERVICES TO BE PERFORMED

1. This Agreement shall apply to as many projects as CITY and COMPANY agree will be performed under the terms and conditions of this Agreement.
2. Each project that COMPANY performs for CITY hereunder shall be designated by a "Task Order." A Task Order shall be in the form of that attached hereto and incorporated herein as Exhibit "A" or a form substantially similar thereto. No Task Order shall be binding or enforceable unless and until it has been properly executed by both CITY and COMPANY. Each properly executed Task Order shall become a separate supplemental agreement to this Agreement.
3. COMPANY shall provide those services described in each properly executed Task Order.
4. COMPANY shall perform said services (1) with the professional skill and care ordinarily provided by competent professionals practicing in the same or similar locality

and under the same or similar circumstances and professional license and (2) as expeditiously as is prudent considering the ordinary professional skill and care of a competent professional. COMPANY represents that any employee who performs services under this Agreement shall be fully qualified and competent to perform said services.

5. In resolving potential conflicts between this Agreement and the Task Order pertaining to a specific project, the terms of the Task Order shall control except to the extent that the terms of the Task Order conflict with Article III below.

ARTICLE III. FINANCIAL CONSIDERATIONS

CITY agrees to pay COMPANY for said professional services in accordance with Part 5 of each Task Order; provided, however, (1) that the payment from CITY to COMPANY for each Task Order shall not exceed $150,000.00 and (2) that the total cost to CITY for all Task Orders executed by CITY and COMPANY each year in accordance with this Agreement shall not exceed $300,000.00 per year. COMPANY shall provide to CITY a monthly invoice. The monthly invoice shall set forth all service fees for the month and those expenses described in the Task Order incurred during the previous month which have received advance written approval from the City Manager. The City Manager must approve all additional expenses and reimbursable expenses in advance. Within 30 days of the date on which COMPANY's invoice is received by CITY, CITY shall pay the full amount of such invoice; provided, however, that if CITY objects to any portion of an invoice, CITY shall notify COMPANY of CITY's objection and the grounds therefor within 15 days of the date of receipt of the invoice, and the parties immediately shall make every effort to settle the disputed portion of the invoice. CITY in any event shall pay every portion of the invoice that is not in dispute within the 30-day period for payment.

ARTICLE IV. TERM

The Initial term of this Agreement shall be from July 12, 2023 until July 12, 2026 unless by providing written notice to COMPANY of CITY's desire to extend the Contract not later than sixty (60) days prior to the end of the then current term. Extensions of this Contract will be based on acceptable performance as long as the price does not exceed administrative parameters.

ARTICLE V. TERMINATION AT WILL

CITY may terminate this Agreement at will for no or any reason upon giving at least one-hundred-eighty (180) days written notice to COMPANY. The parties to this Agreement

understand and agree that it is in CITY'S sole discretion to cancel the Agreement during the term of the Agreement without penalty to CITY. COMPANY has no expectation and has received no guarantees that this Agreement will not be terminated before the end of the Agreement term. The parties have bargained for the flexibility of terminating this Agreement upon tender of the requisite notice at any time during the term of the Agreement. All work and services under the Agreement shall be suspended upon termination of the Agreement becoming effective.

ARTICLE VI. ASSIGNMENT

COMPANY shall not, either directly or indirectly, assign all or any part of this Agreement or any interest, right or privilege herein, without the prior written consent of CITY. The issue on whether or not to grant consent to an assignment is in the sole discretion of CITY.

ARTICLE VII. OWNERSHIP AND CONFIDENTIALITY OF DOCUMENTS AND OTHER WORK PRODUCT

All reports, information and other data ("instruments of service"), given to, prepared or assembled by COMPANY under this Agreement, and any other related documents or items shall become the sole property of CITY and shall be delivered to CITY, without restriction, except that COMPANY may make copies of any and all instruments of service for its files. CITY shall not make any modification to the plans and specifications or make them available for use by third parties without the prior written authorization of COMPANY, which consent shall not be unreasonably withheld.

ARTICLE VIII. INDEPENDENT CONTRACTOR

It is expressly understood and agreed that COMPANY shall perform all work and services described herein as an independent contractor and not as an officer, agent, servant or employee of CITY; that COMPANY shall have exclusive control of and the exclusive right to control the details of the services and work performed hereunder, and all persons performing the same; and shall be solely responsible for the acts and omissions of its officers, agents, employees, contractors and subcontractors; that the doctrine of respondeat superior shall not apply as between CITY and COMPANY, its officers, agents, employees, contractors and subcontractors; and that nothing herein shall be construed as creating a partnership or joint enterprise between CITY and COMPANY. No person performing any of the work and services described hereunder by COMPANY shall be considered an officer, agent, servant or employee of CITY. Further, it is specifically understood and agreed that nothing in this Agreement is

intended or shall be construed as creating a "Community of Pecuniary Interest" or "An Equal Right of Control" which would give rise to vicarious liability. COMPANY shall be an independent contractor under this Agreement and shall assume all of the rights, obligations and liabilities, applicable to it as such independent contractor hereunder. CITY does not have the power to direct the order in which the work is done. CITY shall not have the right to control the means, methods or details of COMPANY'S work. COMPANY shall assume exclusive responsibility for the work. COMPANY is entirely free to do the work in its own way.

ARTICLE IX. INSURANCE

COMPANY shall at all times during the term of this Agreement maintain and keep in full force and effect insurance in the following types and minimum amounts with companies authorized to do business in the State of Texas:

Commercial General Liability (including Contractual liability):

-Personal Injury:	$1,000,000.00 per person
	$1,000,000.00 per occurrence
-Property Damage:	$500,000.00 per occurrence
Business Automobile Liability:	$250,000.00 combined single limit - Personal Injury and Property Damage
Workers' Compensation:	Statutory limits
Employers' Liability:	$500,000.00 per accident or occurrence

The Commercial General Liability shall be on a per project aggregate, including completed operations, and shall be on a claims-occurred basis. This insurance shall name CITY as an additional insured and waive subrogation in favor of CITY.

The Business Automobile Liability insurance provided by COMPANY shall cover any auto for bodily injury and property damage, including owned vehicles, hired and non-city vehicles, and employee non-ownership, and the amount of such policy shall be a minimum of $250,000.00 covering any vehicle used for the execution of the work that is the subject of this Agreement. This insurance shall name CITY as an additional insured and waive subrogation in favor of CITY.

The Workers' Compensation coverage provided by COMPANY shall inure to the benefit of employees injured during the course and scope of their employment by COMPANY pursuant to this Agreement. The Workers' Compensation shall waive all rights of subrogation in favor of CITY.

All insurance required pursuant to this Agreement shall provide for a waiver of

subrogation in favor of CITY. All insurance required pursuant to this Agreement, except for Workers' Compensation Insurance, shall name CITY as an additional insured on a claims occurred basis. CITY shall be provided the notice by COMPANY'S insurance provider not later than thirty (30) days prior to any reduction or termination of such coverage.

COMPANY shall contractually require all contractors, subcontractors, and sub-subcontractors that work on any portion of the work that is the subject of this Agreement to obtain insurance coverage that meets or exceeds the policy requirements and minimum amounts specified herein. All contractors, subcontractors, and sub-subcontractors shall obtain insurance policies that provide blanket waivers of subrogation in favor of the City of Midland and policies that name the City of Midland as an additional insured on a claims occurred basis (except workers' compensation).

The parties agree that, prior to the execution of the Agreement, COMPANY shall provide one or more certificates of insurance specifically stating that these requirements have been met and subject to the approval of CITY. CITY shall not be required to provide any insurance whatsoever pursuant to this Agreement.

COMPANY certifies that the certificate of insurance provided as required herein complies with the requirements of Chapter 1811 of the Texas Insurance Code. COMPANY shall not use an unapproved certificate of insurance or insert inappropriate language on a certificate. Compliance with state law is the sole responsibility of COMPANY.

ARTICLE X. ATTORNEY FEES

BY EXECUTING THIS AGREEMENT, COMPANY AGREES TO WAIVE AND DOES HEREBY KNOWINGLY, CONCLUSIVELY, VOLUNTARILY AND INTENTIONALLY WAIVE ANY CLAIM IT HAS OR MAY HAVE IN THE FUTURE AGAINST CITY, REGARDING THE AWARD OF ATTORNEY'S FEES, WHICH ARE IN ANY WAY RELATED TO THE AGREEMENT, OR THE CONSTRUCTION, INTERPRETATION OR BREACH OF THE AGREEMENT. COMPANY SPECIFICALLY AGREES THAT IF COMPANY BRINGS OR COMMENCES ANY LEGAL ACTION OR PROCEEDING RELATED TO THIS AGREEMENT, THE CONSTRUCTION, INTERPRETATION, VALIDITY OR BREACH OF THIS AGREEMENT, INCLUDING BUT NOT LIMITED TO ANY ACTION PURSUANT TO THE PROVISIONS OF THE TEXAS UNIFORM DECLARATORY JUDGMENTS ACT (TEXAS CIVIL PRACTICE AND REMEDIES CODE SECTION 37.001, ET SEQ., AS AMENDED), OR CHAPTER 271 OF THE TEXAS LOCAL GOVERNMENT CODE,

COMPANY AGREES TO ABANDON, WAIVE AND RELINQUISH ANY AND ALL RIGHTS TO THE RECOVERY OF ATTORNEY'S FEES TO WHICH COMPANY MIGHT OTHERWISE BE ENTITLED.

COMPANY AGREES THAT THIS IS THE VOLUNTARY AND INTENTIONAL RELINQUISHMENT AND ABANDONMENT OF A PRESENTLY EXISTING KNOWN RIGHT. COMPANY ACKNOWLEDGES THAT IT UNDERSTANDS ALL TERMS AND CONDITIONS OF THE AGREEMENT. COMPANY FURTHER ACKNOWLEDGES AND AGREES THAT THERE WAS AND IS NO DISPARITY OF BARGAINING POWER BETWEEN CITY AND COMPANY. THIS SECTION SHALL NOT BE CONSTRUED OR INTERPRETED AS A WAIVER OF GOVERNMENTAL IMMUNITY.

COMPANY AND CITY ARE RELYING ON THEIR OWN JUDGMENT. EACH PARTY HAD THE OPPORTUNITY TO DISCUSS THIS AGREEMENT WITH COMPETENT LEGAL COUNSEL PRIOR TO ITS EXECUTION.

ARTICLE XI. GOVERNMENTAL IMMUNITY

By executing this agreement CITY is not waiving its right of governmental immunity. CITY is retaining its immunity from suit. CITY is not granting consent to be sued by legislative resolution or action.

THERE IS NO WAIVER OF GOVERNMENTAL IMMUNITY.

ARTICLE XII. NO THIRD-PARTY BENEFICIARIES

CITY'S approval of this agreement does not create a third-party beneficiary. There is no third-party beneficiary to this Agreement. No person or entity who is not a party to this Agreement shall have any third-party beneficiary or other rights hereunder.

ARTICLE XIII. RELEASE

NOTWITHSTANDING ANY OTHER PROVISIONS, COMPANY HEREBY RELEASES, ACQUITS, RELINQUISHES AND FOREVER DISCHARGES CITY, CITY'S EMPLOYEES AND OFFICERS, FROM ANY AND ALL DEMANDS, CLAIMS, DAMAGES, OR CAUSES OF ACTION OF ANY KIND WHATSOEVER WHICH COMPANY HAS OR MIGHT HAVE IN THE FUTURE, INCLUDING BUT NOT LIMITED TO BREACH OF AGREEMENT, QUANTUM MERUIT, CLAIMS UNDER

THE DUE PROCESS AND TAKINGS CLAUSES OF THE TEXAS AND UNITED STATES CONSTITUTIONS, TORT CLAIMS, OR CITY'S NEGLIGENCE.

ARTICLE XIV. GENERAL PROVISIONS

A. Waiver. No waiver by CITY of a breach of any covenant, condition, or restriction of this Agreement shall be construed or held to be a waiver of any succeeding or preceding breach of the same or any other covenant, condition, or restriction contained in this Agreement.

B. Governing Law and Venue. This Agreement shall be governed by the laws of the State of Texas. All performance and payment made pursuant to this Agreement shall be deemed to have occurred in Midland County, Texas. Exclusive venue for any claims, suits or any other action arising from or connected in any way to this Agreement or the performance of this Agreement shall be in Midland County, Texas. The obligations and undertakings of each of the parties to this Agreement shall be deemed to have occurred in Midland County, Texas. This Agreement shall be governed by, interpreted, enforced and construed under the laws of the State of Texas. The laws of the State of Texas shall govern, construe and enforce all the rights and duties of the parties, including but not limited to tort claims and any and all contractual claims or disputes, arising from or relating in any way to the subject matter of this Agreement, without regard to conflict of laws and rules that would direct application of the laws of another jurisdiction.

C. Notice. Any notice or demand that shall be made regarding this Agreement, shall be made in writing and delivered either in person or by certified or registered mail. Notice by mail shall be complete upon deposit of the paper, postage prepaid, in a post office or official depository under the care and custody of the United States Postal Service addressed as follows:

If to CITY: City Manager's Office
P.O. Box 1152
Midland, Texas 79702

If to COMPANY: Terracon Consultants, Inc.
10400 State Hwy 191
Midland, Texas 79707

The parties hereto may change the above-designated addresses by giving notice pursuant to the terms of this Section.

D. Severability. In case any one or more of the provisions contained in this Agreement shall for any reason be held to be invalid, illegal, or unenforceable in any respect, this invalidity, illegality, or unenforceability shall not affect any other provision of the Agreement, and this Agreement shall be construed as if the invalid, illegal, or unenforceable provision had never been contained herein.

E. Use of Language. Words in the singular shall be held to include the plural, unless the context otherwise requires.

F. Amendments, Modifications, Alterations. No amendment, modification, or alteration of the terms of this Agreement shall be binding unless it is in writing, dated subsequent to the date of this Agreement, and duly executed by the parties to this Agreement.

G. Counterparts. This Agreement may be executed in multiple counterparts, each of which shall be deemed as original, and all of which shall constitute one and the same instrument.

H. Federal Wage Requirements. If applicable, the Davis-Bacon Act, 29 CFR 5.5, and any related acts or regulations are hereby incorporated by reference and made a part of this Agreement, and all terms and requirements under said laws, by such incorporation, are made terms and requirements of this Agreement, to which the parties to this Agreement have agreed to be bound.

I. Notice of Alleged Breach; Statutory Prerequisites. As a condition precedent to filing suit for alleged damages incurred by an alleged breach of an express or implied provision of this Agreement, COMPANY or his legal representative, shall give the City Manager, or any other reasonable official of CITY, notice in writing (consisting of one original and seven copies of notice attached to a copy of this Agreement) of such damages, duly verified, within one-hundred fifty (150) days after the same has been sustained. The discovery rule does not apply to the giving of this notice. The notice shall include when, where and how the damages occurred, the apparent extent thereof, the amount of damages sustained, the amount for which COMPANY will settle, the physical and mailing addresses of COMPANY at the time and date the claim was presented and the physical and mailing addresses of COMPANY for the six months immediately preceding the occurrence of such damages, and the names and addresses of the witnesses upon whom COMPANY relies to establish its claim; and a failure to so notify the City Manager within the time and manner provided herein shall exonerate, excuse and except CITY from any liability whatsoever. CITY is under no obligation to provide notice to COMPANY that COMPANY'S

notice is insufficient. CITY reserves the right to request reasonable additional information regarding the claim. Said additional information shall be supplied within thirty (30) days after receipt of notice.

The statutory prerequisites outlined herein constitute jurisdictional requirements pursuant to Section 271.154 of the Texas Local Government Code and Section 311.034 of the Texas Government Code. Notwithstanding any other provision, COMPANY'S failure to comply with the requirements herein shall perpetually bar COMPANY'S claim for damages under Chapter 271 of the Texas Local Government Code, and Section 311.034 of the Texas Government Code, regardless if CITY has actual or constructive notice or knowledge of said claim or alleged damages. COMPANY agrees that the requirements of this entire Agreement are reasonable.

J. PROMPT PAY ACT - CITY and COMPANY agree that Texas Government Code, Chapter 2251, Payment for Goods and Services (the "Prompt Pay Act") does not waive governmental immunity.

K. Compliance. – COMPANY agrees that it shall comply with Texas Government Code Section 2252.908, as amended. COMPANY agrees that it shall comply with Texas Local Government Code Section 176.006, as amended.

L. Anti-Boycott Statutes. To the extent that Tex. Gov't Code §§ 2271.002 and 2274.002 apply to this Agreement, COMPANY hereby verifies that:

- COMPANY does not boycott Israel and will not boycott Israel during the term of this Agreement;
- COMPANY does not boycott energy companies and will not boycott energy companies during the term of this Agreement; and
- COMPANY does not have a practice, policy, guidance, or directive that discriminates against a firearm entity or firearm trade association and will not discriminate during the term of this Agreement against any firearm entity or firearm trade association.

If Tex. Gov't Code § 2270.002 does not apply to this Agreement, such verification is not required, and COMPANY shall be deemed to have not made such verification.

M. Records Retention and Production of Information. To the extent that this Agreement is a contract described by Tex. Gov't Code § 552.371, COMPANY shall: (i) preserve all contracting information related to the Agreement as provided by the records retention requirements applicable to CITY for the duration of the contract; (ii) promptly provide to CITY

any contracting information related to the Agreement that is in the custody or possession of COMPANY on request of CITY; and (iii) on completion of the Agreement, either (a) provide at no cost to CITY all contracting information related to the Agreement that is in the custody or possession of COMPANY, or (b) preserve the contracting information related to the Agreement as provided by the records retention requirements applicable to CITY.

N. Public Information. To the extent that this Agreement is a contract described by Tex. Gov't Code § 552.371, COMPANY agrees as follows in accordance with Tex. Gov't Code § 552.372(b): The requirements of Subchapter J, Chapter 552, Government Code, may apply to this contract, and the contractor or vendor agrees that the contract can be terminated if the contractor or vendor knowingly or intentionally fails to comply with a requirement of that subchapter.

O. Conflict of Terms. If a conflict of terms or language exists between: (i) any of the provisions of this Agreement; and (ii) any of the provisions contained in any exhibit(s) attached to this Agreement, precedence shall be given to the provisions of this Agreement. For the avoidance of any doubt, the provisions contained in this Agreement shall supersede any and all conflicting provisions contained in any exhibit(s) attached hereto. Furthermore, the Parties acknowledge and agree that any provision contained in an exhibit(s) attached to this Agreement that imposes an additional express or implied obligation on CITY is hereby made void and of no force or effect. CITY's sole and exclusive obligations under this Agreement are contained in the provisions of this Agreement that precede the signature page(s), which evidences the Parties' execution and acceptance hereof.

P. Iron or Steel Products Statute. Company agrees that all iron or steel products produced through a manufacturing process and used in the project that is the subject of this Agreement shall be produced in the United States in accordance with Government Code § 2252.202, et seq., as amended.

Q. Interpretation. By executing this Agreement, the Parties acknowledge and agree that this Agreement shall not be interpreted or construed against any Party solely because such Party or its legal counsel drafted this Agreement. The Parties have read, understood, and approve of the language and terms set forth herein.

[Signature Page(s) Follows]

EXECUTED IN DUPLICATE the day and year first above mentioned.

THE CITY OF MIDLAND, TEXAS

_____
Morris Williams Jr., Interim City Manager

ATTEST:

_____
Marcia Bentley-German, City Governance Officer/City Secretary

APPROVED AS TO FORM ONLY:

_____
John Ohnemiller, City Attorney

COMPANY:

By: _____

Name:_____

Title: _____

STATE OF _____§
§
COUNTY OF _____§

BEFORE ME, the undersigned authority, on this ____ day of _____, 2023 personally appeared,_____, an officer of Terracon Consultants, Inc., known to me to be the person and official whose name is subscribed to the forgoing instrument, and acknowledged to me that he executed the same as the act and deed of said corporation, for the purposes and consideration therein expressed, and in the capacity therein stated.

GIVEN UNDER MY HAND AND SEAL OF OFFICE this the __day of _____, 2023.

_____
Notary Public, State of Texas

EXHIBIT 'A'

TASK ORDER NO. _

This Task Order pertains to an Agreement by and between City of Midland, Texas, ("CITY"), and _____ ("COMPANY"), dated _____, 20___, ("the Agreement"). COMPANY shall perform services on the project described below as provided herein and in the Agreement. This Task Order shall not be binding until it has been properly signed by both parties. Upon execution, this Task Order shall supplement the Agreement as it pertains to the project described below.

TASK ORDER NUMBER: ___
PROJECT NAME: _____

PART 1.0 PROJECT DESCRIPTION:

PART 2.0 SCOPE OF SERVICES TO BE PERFORMED BY COMPANY ON THE PROJECT:

PART 3.0 CITY'S RESPONSIBILITIES:

PART 4.0 PERIODS OF SERVICE:

PART 5.0 PAYMENTS TO COMPANY:

PART 6.0 OTHER:

This Task Order is executed this _____ day of _____, 20___.

CITY OF MIDLAND, TEXAS		_____	
"CITY"		"COMPANY"	
BY:	_____	BY:	_____
NAME:	Morris Williams, Jr.	NAME:	_____
TITLE:	Interim City Manager	TITLE:	_____
ADDRESS:	P.O. Box 1152 Midland, TX 79702	ADDRESS:	_____ _____

City Council Meeting

Item Number: 8

Meeting Date: July 11, 2023

To: City Council / City Manager

From: Mark Widmann, Director

Subject: RESOLUTION AMENDING THE CITY OF MIDLAND PERSONNEL POLICIES; CONVERTING THE CITY'S VACATION AND SICK LEAVE PROGRAMS INTO A PAID TIME OFF PROGRAM; AMENDING OTHER LEAVE POLICIES; AND PROVIDING AN EFFECTIVE DATE OF JULY 12, 2023 (DISTRICT: ALL) (ADMINISTRATIVE SERVICES)

Purpose:

The proposed leave plan changes aim to continue attracting and retaining highly effective qualified staff.

Recommended City Council Action:

Approve

Fiscal Impact:

The fiscal impact for the PTO payout is estimated based on the current turnover rate of 18% and additional costs incurred for on-duty staff for holidays. The additional cost is estimated at $1,015,600 across general and enterprise funds. Please refer to the cost breakdown listed below.

Discussion:
In October 2022, Administrative Services Talent Acquisition conducted an employee survey on employee attraction and retention. Employees were asked about current leave policies, and the results showed that sick and vacation leaves and additional time off were important to them. Listed below are some comments received:

- PTO Leave. Many employees prefer a single leave bank replacing vacation and sick leave.
- Increased accrual rates, employees would like to see the amount of leave accrues

increased and at a quicker rate.

- Leave payout. Employees think the payout of leave upon retirement or separation is unfair.
- Personal/Mental Health Days. Many employees, especially our first responders, would like mental health days to be available.
- Matching Holidays Employees would like to see the holiday calendar match up with the county, school districts, and state-level government.

November of 2022, Administrative Services Talent Acquisition held a briefing with the Council outlining the concerns and priorities of our employees. As a result, we are recommending the following Chapter V. Personnel Policy changes for Council consideration.

Create PTO:

Creating a single Paid Time Off (PTO) bank that would combine the current vacation and sick leaves, effective October 1, 2023, the following charts indicate the difference between the current policy and the proposed policy:

Please See Tables 1 & 2

Tables 3, 4, & 5 indicate the difference between the current and recommended PTO payout policies.
Please See Tables 3, 4, & 5

Personal/Mental Health Days

Eligible full-time employees shall receive two (2) Mental Health Days per calendar year. This benefit shall not carry over into the following year and shall not be paid out at termination of employment.

Community Service Leave

Full-time employees are eligible to request one (1) day per calendar year to participate in organizations and activities that benefit the local community. Community Service Leave is noncumulative, nontransferable, and not paid out at termination.

Holidays

Additionally, recognized the following holidays as City holidays: 1) Juneteenth National

Independence Day (currently provided), and 2) Veterans Day.

Birthday Leave

A currently provided benefit added to the Personnel Policy's full-time employees are eligible for one (1) day of paid birthday leave annually. Birthday leave is taken during the employees' birthday month. Unused birthday leave will not carry over to the next year and is not paid out at termination.

Costing

The chart below illustrates the estimated additional budgeted cost.

Proposed Leave		Amount
Paid Time Off	Estimated additional payout cost based on the current turnover rate	$715,600
Personal/Mental Health Days (2 Days)	Based on the OT cost of mandated positions, 100% participation	$150,000
Community Service Leave (1 Day)	Based on the OT cost of mandated positions, 100% participation	$75,000
Additional Holiday (Veterans Day)	Based on the OT cost of mandated positions, 100% participation	$75,000
	Total	$1,015,600

In addition to Chapter V, Leave Plans changes, multiple formatting and grammar adjustments were made.

Tina Jaug

City Manager's Office

Please See Tables 1 & 2

Table 1

Current Policy

	1 to 4 years		4 to 9 years		9 to 19 years		19 Years Plus		Hired prior 6/1/1990	
	80 Hr	**Fire 56**	**80 Hr**	**Fire 56**	**80 Hr**	**Fire 56**	**80 Hr**	**Fire 56**	**80 Hr**	**Fire 56**
Vacation Days Annual	10	15	15	15	17	17	20	20	27	27
Maximum Vacation Days	20	20	30	30	34	34	40	40	54	54
Maximum Vacations Days Payout (100%)	20	20	30	30	34	34	40	40	54	54
Sick Annual	10	10	10	10	10	10	10	10	15	15
Sick Maximum Days	90	90	90	90	90	90	90	90	90	90
Maximum Sick Days Payout (1/3)	30	30	30	30	30	30	30	30	30	30
Combined Vacation/Sick Current										
Days/Annual	20	25	25	25	27	27	30	30	42	42
Maximum Days	110	110	120	120	124	124	130	130	144	144
	Sick Leave Payout Not Included				**1/3 Sick Leave Payout Included**					
Current Maximum Days Payout	**20**	**20**	**30**	**30**	64	64	70	70	84	84

Table 2

Proposed Paid Time Off

	Less than 1 year		1 to < 4 yrs		4 to < 9 yrs		9 to < 15 yrs		15 Years Plus		prior 6/1/1990	
	80 Hr	**Fire 56**	**80 Hr**	**Fire 56**	**80 Hr**	**Fire 56**	**80 Hr**	**Fire 56**	**80 Hr**	**Fire 56**	**80 Hr**	**Fire 56**
Days Annual	25	25	27	27	29	29	31	31	33	33	44	44
Maximum Days	25	25	118	118	128	128	133	133	139	139	145	145
Payout Percentage	0%	0%	70%	70%	73%	73%	76%	76%	79%	79%	82%	82%
Maximum Payout Days	0	0	82.6	82.6	93.44	93.44	101.08	101.08	109.81	109.81	118.9	118.9

Please See Tables 3, 4, & 5

Table 3

Current Policy Payout

	1 to <4 years		4 to <9 years		9 to <19 years		19 Years Plus		Prior 6/1/1990	
	80 Hr	**Fire 56**	**80 Hr**	**Fire 56**	**80 Hr**	**Fire 56**	**80 Hr**	**Fire 56**	**80 Hr**	**Fire 56**
Vacation Payout %	100%	100%	100%	100%	100%	100%	100%	100%	100%	100%
Maximum Vacations Days Payout	20	20	30	30	34	34	40	40	54	54
Maximum Sick Days	90	90	90	90	90	90	90	90	90	90
Sick Payout % to an RRA Account If Eligible for City Retirement	33%	33%	33%	33%	33%	33%	33%	33%	33%	33%
Maximum Sick Days Payout If Eligible for City Retirement	30	30	30	30	30	30	30	30	30	30
Maximum Vacation / Sick Days Payout If Eligible for City Retirement	**50**	**50**	**60**	**60**	**64**	**64**	**70**	**70**	**84**	**84**

Table 4

Proposed Paid Time Off Payout

	Less than 1 year		1 to <4 years		4 to <9 years		9 to <15 years		15 Years Plus		Prior 6/1/1990	
	80 Hr	**Fire 56**	**80 Hr**	**Fire 56**	**80 Hr**	**Fire 56**	**80 Hr**	**Fire 56**	**80 Hr**	**Fire 56**	**80 Hr**	**Fire 56**
Maximum PTO Days	25	25	118	118	128	128	133	133	139	139	145	145
PTO Payout %	0%	0x%	70%	70%	73%	73%	76%	76%	79%	79%	82%	82%
Maximum PTO Payout Days	**0**	**0**	**82.60**	**82.60**	**93.44**	**93.44**	**101.08**	**101.08**	**109.81**	**109.81**	**118.90**	**118.90**
	*Eligible retirees may defer 250 hours of their payout to a Retiree Medical Reimbursement Account (RRA).											

Table 5 Payout Difference Proposed PTO / Current																
	Less than 1 year			1 to < 4 yrs			4 to < 9 yrs			9 to < 15 yrs			15 Years Plus			prior 6/1/1990	
	80 Hr	Fire 56		80 Hr	Fire 56		80 Hr	Fire 56		80 Hr	Fire 56		80 Hr	Fire 56		80 Hr	Fire 56
Payout Difference PTO / Current				32.60	32.60		33.40	33.40		37.08	37.08		39.81	39.81		34.90	34.90

RESOLUTION NO. _____

RESOLUTION AMENDING THE CITY OF MIDLAND PERSONNEL POLICIES; CONVERTING THE CITY'S VACATION AND SICK LEAVE PROGRAMS INTO A PAID TIME OFF PROGRAM; AMENDING OTHER LEAVE POLICIES; AND PROVIDING AN EFFECTIVE DATE OF JULY 12, 2023

WHEREAS, the City Council finds it to be in the public interest to approve and adopt certain amendments to the City of Midland Personnel Policies;

NOW, THEREFORE, BE IT RESOLVED BY THE CITY COUNCIL OF THE CITY OF MIDLAND, TEXAS:

SECTION ONE. That the City of Midland Personnel Policies are hereby amended to read in their entirety as shown in Exhibit "A", which is attached hereto and incorporated herein (the "Amended Personnel Policies").

SECTION TWO. That the Amended Personnel Policies shall become effective July 12, 2023 (the "Effective Date"); provided, however, that the provisions of the City of Midland Personnel Policies that existed the day before the Effective Date concerning vacation leave and sick leave shall continue to be effective until the Paid Time Off program established in the Amended Personnel Policies becomes effective on October 1, 2023.

SECTION THREE. That the Administrative Services Director is hereby authorized to make non-substantive ministerial revisions to the Amended Personnel Policies, such as correcting misspellings, grammatical errors, and cross-references and making formatting changes.

SECTION FOUR. That should any section, clause, or provision of this resolution or the Amended Personnel Policies be declared by a court of competent jurisdiction to be invalid, same shall not affect the validity of this resolution or any other resolution of the City as a whole, or any part thereof, or the Amended Personnel Policies other than the part so declared to be invalid.

On motion of Council member _____, seconded by Council member _____, the above and foregoing resolution was adopted by the City Council of the

City of Midland at a regular meeting on the _____ day of _____, A.D., 2023, by the following vote:

Council members voting "AYE":

Council members voting "NAY":

_____
Lori Merritt Blong, Mayor

ATTEST:

_____
Marcia Bentley-German, City Secretary

RECOMMENDED AND APPROVED:

_____
Morris Williams, Jr., Interim City Manager

APPROVED AS TO CONTENT
AND COMPLETENESS:

_____
Mark Widmann, Administrative Services Director

APPROVED AS TO FORM ONLY:

_____
John Ohnemiller, City Attorney

EXHIBIT "A"



City of Midland, Texas
Personnel Policies

ORIGINAL PRINT, 1970

REVISED July 11, 2023

Certificates

This certificate shall be placed at the beginning of the City's Personnel Policies. Resolution Number 2009-341, adopted by the Midland City Council on December 8, 2009, amends the Cityof Midland Personnel Policies. The City of Midland Personnel Policies are amended as if Resolution Number 2009-341 was entirely incorporated and written verbatim into the City of Midland Personnel Policies. I am authorized to execute this certification on behalf of the City ofMidland, Texas, by the City Charter, Ordinances of the City of Midland, Sections 271.151 to Section 271.160 of the Texas Local Government Code, as amended, and Resolution Number 2009-341.

W. Wesley Perry, Mayor

This certificate shall be placed at the beginning of the City of Midland Personnel Policies. Resolution No. 2011-067, adopted by the Midland City Council on April 12, 2011, amends the City of Midland Personnel Policies. The City of Midland Personnel Policies are amended as if Resolution No. 2011-067 was entirely incorporated and written verbatim into the City of MidlandPersonnel Policies. I am authorized to execute this certification on behalf of the City of Midland,Texas, by the City Charter, Ordinances of the City of Midland, Sections 271.151-.160 of the Texas Local Government Code, as amended, and Resolution No. 2011-067.

W. Wesley Perry, Mayor

This certificate shall be placed at the beginning of the City of Midland Personnel Policies. The City shall be bound by this execution and it is not necessary for the employee to execute any instrument to be bound. All employees accept these policies by actual performance.

Resolution No. 2011-185, adopted by the Midland City Council on August 9, 2011, amends the City of Midland Personnel Policies. The City of Midland Personnel Policies are amended as if Resolution No. 2011-185 was entirely incorporated and written verbatim into the City of Midland Personnel Policies. I am authorized to execute this certification on behalf of the City of Midland, Texas, by the City Charter, Ordinances of the City of Midland, Sections 271.151-.160 of the Texas Local Government Code, as amended, and Resolution No. 2011-185.

W. Wesley Perry, Mayor

This certificate shall be placed at the beginning of the City of Midland Personnel Policies. The City shall be bound by this execution and it is not necessary for the employee to execute any instrument to be bound. All employees accept these policies by actual performance.

Resolution No. 2018-225, adopted by the Midland City Council on June 27, 2018, amends the City of Midland Personnel Policies. The City of Midland Personnel Policies are amended as if Resolution No. 2018-225 was entirely incorporated and written verbatim into the City of MidlandPersonnel Policies. I am authorized to execute this certification on behalf of the City of Midland,Texas, by the City Charter, Ordinances of the City of Midland, Sections 271.151-.160 of the Texas Local Government Code, as amended, and Resolution No. 2018-225.

Jerry F. Morales, Mayor

This certificate shall be placed at the beginning of the City of Midland Personnel Policies. The City shall be bound by this execution and it is not necessary for the employee to execute any instrument to be bound. All employees accept these policies by actual performance.

Resolution No. 2021-065, adopted by the Midland City Council on May 25, 2021, amends the City of Midland Personnel Policies. The City of Midland Personnel Policies are amended as if Resolution No. 2021-065 was entirely incorporated and written verbatim into the City of MidlandPersonnel Policies. I am authorized to execute this certification on behalf of the City of Midland,Texas, by the City Charter, Ordinances of the City of Midland, Sections 271.151-.160 of the Texas Local Government Code, as amended, and Resolution No. 2021-065.

Patrick Payton, Mayor

This certificate shall be placed at the beginning of the City of Midland Personnel Policies. The City shall be bound by this execution and it is not necessary for the employee to execute any instrument to be bound. All employees accept these policies by actual performance.

Resolution No. 2023-XXX, adopted by the Midland City Council on July 11, 2023, amends the City of Midland Personnel Policies. The City of Midland Personnel Policies are amended as if Resolution No. 2023-XXX was entirely incorporated and written verbatim into the City of MidlandPersonnel Policies. I am authorized to execute this certification on behalf of the City of Midland,Texas, by the City Charter, Ordinances of the City of Midland, Sections 271.151-.160 of the Texas Local Government Code, as amended, and Resolution No. 2023-XXX.

Lori Blong, Mayor

Personnel Policies
With Explanations

Foreword

The intent of this document is to provide helpful personnel information to every employee of the City of Midland. It is compiled after much consideration by many members of the City staff. It is designed as a device for better understanding and communication among the employees.

This manual is to be used as a reference, and knowledge of its contents is essential.

Policy changes may occur often, and the information in this handbook will change. As an employee, your input is important and appreciated.

Table of Contents

Certificates ..... **ii**

Personnel PoliciesWith Explanations ..... **iv**
Foreword ..... **iv**

Table of Contents ..... **v**

Chapter I **1**
Purpose **1**
Section 1 Objectives 1
Section 2 Applicability 1
Section 3 Nondiscrimination 1
Section 4 Mission 2
Section 5 Vision 2
Section 6 Guiding Principles 2

Chapter II **3**
General Provisions **3**
Section 1 Political Activity 3
Section 2 Disclosure of Religious Affiliations 3
Section 3 Nepotism 3
Section 4 Oath of Office 4
Section 5 Solicitations 4
Section 6 Financial Responsibility of Employees 4
Section 7 Outside Employment 4
Section 8 City-Owned Vehicles 5
Section 9 Employment Conditions 5
Section 10 Amendment and Revision of Rules 5
Section 11 Possession of Weapons 5

Chapter III **6**
Organization and Administration **6**
Section 1 Organization of Personnel 6

Chapter IV **7**
Applications, Applicants, and Conditions of Employment **7**
Section 1 Basis of Employment 7
Section 2 Recruitment 7
Section 3 Requests for Personnel 7
Section 4 Applicant Preference 7
Section 5 Residence 7
Section 6 Announcements 8
Section 7 Application and Selection Procedures 8
Section 8 Appointments 8
Section 9 Physical Standards 8
Section 10 Age Requirements 9
Section 11 Standards of Conduct 9
Section 12 Types of Positions 9
Section 13 Disqualification for Employment 9

Section 14 Probation Periods 10
Section 15 City of Midland Drug and Alcohol Testing Policy 10
Section 16 Harassment Policy and Procedures 16
Section 17 Workplace Violence Policy....18

Chapter V 19
Attendance and Leaves 19
Section 1 Hours of Work 19
Section 2 Regular Working Day....19
Section 3 Work Week 19
Section 4 Overtime....19
Section 5 Attendance....19
Section 6 Inclement Weather / Emergency Closure....19
Section 7 Holidays 20
Section 8 Vacation / Sick Leaves....21
Section 9 Paid Time Off ("PTO")....21
Section 10 PTO Bank for Sick Leave....23
Section 11 Paid Time Off (PTO) Buy-Back....25
Section 12 Birthday Leave 25
Section 13 Bereavement Leave....26
Section 14 Family/Medical Leave Act (FMLA) 26
Section 15 Military Leave....29
Section 16 Lactation Break 31
Section 17 Injuries....31
Section 18 Return to Work / Inability to Return to Work 34
Section 19 Paid Quarantine Leave 36
Section 20 Peace Officer and Telecommunicator Mental Health Leave 37
Section 21 Special Leave with Pay....38
Section 22 Mental Health Day 38
Section 23 Community Service Leave....38
Section 24 Civic Duties Leave 38
Section 25 Leave of Absence 38
Section 26 Absence without Leave....39

Chapter VI 40
Wage and Salary Administration....40
Section 1 Application of Rates 40
Section 2 Pay Rates for New Employees 40
Section 3 Pay Progression....40
Section 4 Total Rate of Pay 40
Section 5 Part-time, Temporary and Seasonal Rates....40
Section 6 Pay Rates for New Positions 40
Section 7 Termination Pay....41
Section 8 Longevity Pay....41
Section 9 Performance Appraisal System 41
Section 10 Compensation Policy Statement....41

Chapter VII 43
Transfer, Promotion, Resignation and Retirement....43
Section 1 Transfer....43
Section 2 Promotion....43
Section 3 Resignation 43
Section 4 Termination Interview....43
Section 5 No Recommendations or References....43
Section 6 Requests for Employment Verification....43

Section 7 Personnel Files 44

Chapter VIII 45
Adverse Action 45
Section 1 Adverse Action 45
Section 2 Lay-Off 54
Section 3 Exit Interview 55
Section 4 Name-Clearing Hearing 55

Chapter IX 56
Grievance Procedure 56
Section 1 Policy 56
Section 2 Definitions 56
Section 3 General Provisions 56
Section 4 Procedure 56
Section 5 Written Decisions and Memorandums 57

Chapter X 58
Retirement System and Other Benefits 58
Section 1 Texas Municipal Retirement System 58
Section 2 Firemen's Relief and Retirement 58
Section 3 Federal Insurance Contributions Act 58

Chapter XI 59
Safety 59
Section 1 General 59
Section 2 Accident Review Board 59

Chapter XII 60
Employment at Will 60
Section 1 Council Appointees, Other Employees and Department Managers 60
Section 2 Applicability 61

City of Midland Personnel Policies

Chapter I

Purpose

Section 1 Objectives

The objectives of these rules are to facilitate efficient and economical services to the public and to provide for a fair and equitable system of personnel management for the City. While these rules constitute a precise statement of policies and procedures, they are not intended to cover every conceivable personnelsituation that may arise. As with any ordinance or regulation, these rules must be supplemented with administrative regulations in addition to the principles and policies set forth. For this reason, considerable latitude shall be given to the City Manager and the Administrative Services Director for administration of these policies within the framework set forth in these rules. It is expected that amendments and revisions affecting personnel policies will be made from time to time when they are necessary to meet changing conditions.

Section 2 Applicability

These rules, policies and procedures shall apply to and govern all employees of the City of Midland, except when these rules are inconsistent with State legislation. Words used in the singular shall be construed to read in the plural and words used in the masculine gender shall be construed to read in the feminine. Failure to comply with these policies may result in disciplinary action being taken against an employee. Nothing in these rules, policies and procedures, except Chapter XII, shall be considered or construed to establish an employment agreement or contractor right of employment with the City of Midland. Nothing in these policies, rules and procedures, except Chapter XII, should be construed as an employment agreement, guarantee of or contract for continued benefits from or employment by the City of Midland. Severance as defined in these rules and policies shall mean salary and all other compensation. Severance is to be paid in a lump sum upon involuntary separation. The Mayor shall have the authority to execute and approve amendments and modifications to employment agreements entered into under Chapter XII. The standard for compliance by the City with these personnel policies, rules or procedures shall be substantial compliance. A violation of or failure to follow any rule or procedure shall not form a basis for any civil or criminal action against the City or any employee or official of the City who is acting on behalf of the City except as authorized by Sections 271.151 through 271.160 of the Texas Local Government Code, as amended. The administrative remedy set out in these rules and procedures is the exclusive remedy. There shall be no appeal to or action in any court except on constitutional or statutory grounds. These personnel rules, policies and procedures shall be implemented, administered and construed to comply with applicable local, state and federal laws.That the term Other Employees as used in these policies shall only mean the Deputy City Manager, Assistant City Manager and First Assistant City Attorney. That Chapter XII and its related definitions are a contract for providing services as authorized by Sections 271.151 through 271.160 of the Texas Local Government Code, as amended. The testing of employees conducted in conjunction with the administration and enforcement of the City's drug and alcohol testing policy shall be conducted in accordance with the United States Constitution, the Texas Constitution, federal and state laws, and regulations and judicial precedent. Except as outlined in Chapter XII, an employee's at-will employment status is not modified by these policies and the Midland City Council reserves the right to amend these personnel policies in accordance with applicable statues. As used in these rules and policies, council appointees shall mean the City Manager, City Attorney, City Secretary, the Presiding Municipal Court Judge and the Associate Municipal Court Judge.

Section 3 Nondiscrimination

Equal employment opportunities shall be afforded to all qualified persons seeking employment with the City of Midland, Texas, and no person shall be refused employment because of race, age, color, creed, sex, national origin, disability, or genetic information, nor shall any person be promoted, demoted, transferred or discharged for reasons other than merit. Discrimination against any person in recruitment, examination, appointment, training, promotion, retention, discipline, compensation or any other aspect of

personnel administration because of race, age, color, creed, sex, national origin, disability, or genetic information is prohibited.

Section 4 Mission

We, the employees of the City of Midland, are passionate and energetic about the service we provide to each other and our community.

Section 5 Vision

Midland is a growing urban center in Texas, with a healthy economy and a vibrant downtown.

We enjoy great living, abundant leisure opportunities, and effective transportation-easy movement through our City.

Our diverse Midland community works together for a bright sustainable future; our City is recognized as a leader.

Section 6 Guiding Principles

1. Demonstrate integrity, respect and value everyone.
2. Exhibit professionalism by being accountable and dependable.
3. Exercise cooperation through a dedication to serve others.

Chapter II

General Provisions

Section 1 Political Activity

While in uniform or on active duty, an employee of the City of Midland may not engage in a political activity relating to a campaign for an elective office.

For the purposes of this section, a person engages in a political activity if the person:

a. Makes a public political speech supporting or opposing a candidate;

b. Distributes a card or other political literature relating to the campaign of a candidate;

c. Wears a campaign button;

d. Circulates or signs a petition for a candidate;

e. Solicits votes for a candidate;

f. Solicits campaign contributions for a candidate.

While out of uniform and not on active duty, an employee of the City of Midland may engage in a political activity relating to a campaign for an elective office, including each activity listed, except that the person may not solicit campaign contributions for a candidate other than from members of an employee organization to which that person belongs. See Texas Local Government Code 150.002.

Section 2 Disclosure of Religious Affiliations

No question in any text, in any application form or in any personnel proceeding, or of any appointing authority, shall be so framed as to attempt to elicit information concerning religious opinions or affiliations of any applicant or employee. No appointment to, or removal from, a position with the City of Midland shall be affected or influenced in any manner by any religious opinion or affiliation.

Section 3 Nepotism

a. No person related, within the second degree of affinity (marriage) or within the third degree of consanguinity (blood), to the Mayor, member of the City Council, or the City Manager shall be appointed to any office, position or clerkship or other service to the City.

b. In addition to the above stipulation, it is hereby provided that relatives or family members related within the second degree of affinity or the second degree of consanguinity (as defined in section "d" of this regulation) shall not be appointed to serve in positions in the same division (except for Police and Fire Departments, where the term “on the same shift assignment” shall be substituted for the term “in the same division”) or in a position where one relative is to supervise or have influence over the other's employment. Any Department Manager who feels that such appointments are justified and necessary must present to the Administrative Services Director the reason and needs which are the basis for requesting the appointment. The City Manager's approval will be needed to make the appointment official.

c. In the event of reorganization, promotion, or marriage between two City employees, the following shall apply:

1) If the affected employees are employed in different departments or different divisions of a department and neither is in a position to supervise or have influence over the other's employment, no change in employment status will be required,

2) If the affected employees are employed in the same division of a department (or one is in a position to supervise or have influence over the other's employment), one of them must seek a transfer to another division of that department or to another department. Said employee may apply for any position for which they meet the minimum qualifications, but cannot remain in the same division for more than 90 days. At the end of the 90-day period one of the two must either terminate employment or accept reassignment to a position selected by the City Manager. Such reassignment shall be at the City Manager's sole discretion with due regard for the individual's skills and qualifications and the organization's needs. The City Manager may extend the 90 day limit an additional 90 days if the City Manager finds an extension to be in the best interest of the City of Midland.

d. For the purpose of this policy, the following shall constitute familial relationships:

1) Consanguinity (Blood): 1st degree includes Mother, Father, Son and Daughter; 2nd degree includes Brother, Sister, Grandfather, Grandmother, Grandson, Granddaughter; 3rd degree includes Uncle, Aunt, Nephew, Niece, Great Grandson, Great Granddaughter, Great Grandfather, Great Grandmother.

2) Affinity (Marriage): 1st degree includes Spouse, Mother-in-law, Father-in-law, Son-in-law, and Daughter-in-law (for the purposes of this policy 1st degree relationship will also apply to Stepmother, Stepfather, Stepson, and Stepdaughter); 2nd degree includes Brother-in-law, Sister-in-law (for the purpose of this policy 2nd degree relationship will also apply to Stepbrother and Stepsister), Grandfather-in-law, Grandmother-in-law, Grandson-in-law, Granddaughter-in-law.

Relatives who are currently employed in situations that would be a violation of this policy on the date it becomes effective shall not have their current employment status affected.

Section 4 Oath of Office

"All officers of the City, whether elective or appointive, shall qualify by taking the oath prescribed by the constitution of this state and by executing such bond as may be required under the provisions of this Charter and the ordinances and resolutions of the City". (Charter of the City of Midland, Article IV, Section 8)

Section 5 Solicitations

No solicitation of funds of any character or for any purpose whatsoever shall be permitted among city employees on the job without the express approval of the City Manager.

Section 6 Financial Responsibility of Employees

Employees of the City of Midland are expected to maintain a good credit standing in the community and to pay their obligations promptly. The City shall in no way serve as a collecting agency or arbitrator. Failure of an employee to pay or make reasonable provisions for future payment of his debts to such an extent that such failure shall be detrimental to the City services may be just cause for dismissal.

Section 7 Outside Employment

Full-time City employees are not encouraged to accept additional employment from another source. However, in certain situations, occasional and part-time work will be allowed if approved by the Department Manager and the City Manager and if the work does not constitute a conflict of interest, does not interfere with the employee efficiently carrying out his normal duties with the City, and does not involve the use of City time or City equipment. If an employee shall become unable to perform the duties of his City job because of any injury or other incapacitating cause while in the employment of an employerother than the City, the City may, at its sole option, reduce the benefits otherwise granted by thesepolicies to whatever amount or degree the City deems to be justified.

Section 8 City-Owned Vehicles

All employees who drive City-owned vehicles in the performance of their duties are responsible for their proper operation. No City vehicle or piece of equipment used in normal operation or an emergency vehicle housed at an employee's home is to be used for personal business, except police. No City employee may drive a City vehicle if he does not have a valid driver's license.

Section 9 Employment Conditions

These rules shall become a part of the employment conditions of each employee and employment or continued employment with the City shall be contingent upon the employee's compliance with theprovisions of these rules. Within ninety (90) days after the adoption of these rules and at the time of employment of each new employee, a copy of these rules in handbook form incorporating pertinent phrases of these rules shall be furnished to each employee.

Section 10 Amendment and Revision of Rules

The Director of Administrative Services may make recommendations for amendment and revision ofthese rules to the City Manager. If the City Manager shall approve such changes, he in turn shall submit them to the City Council for their approval. All rules and amendments thereto shall become effective uponthe date of their approval by the City Council.

A copy of the Personnel Policies, Rules and Procedures, and all amendments or changes shall be filed in the office of the City Secretary and shall be available for inspection by all City employees and the public. Such filing shall constitute notice to all employees of the personnel policies, rules and procedures and of all amendments and changes. The Personnel Policies, Rules and Procedures manual, as amended or changed from time to time, shall supersede any conflicting provisions previously adopted. The rules, policies and procedures described herein may be amended, changed or terminated in whole or in part, at any time by the City of Midland. If an employee continues to work for the City of Midland for thirty (30) days after the effective date of any such amendment, change or termination, the employee will be deemed to have accepted such amendment, change or termination.

Section 11 Possession of Weapons

No employee, other than a peace officer, shall carry on or about his/her person, at a City work site, any instrument or weapon that is specifically designed, made, or adapted for the purpose of inflicting serious bodily injury or death, including, but not limited to, clubs, firearms, handguns, illegal knives, explosives, crossbows, bow and arrows, throwing stars and knuckles. No employee, other than a peace officer, shall carry a concealed weapon in any City building, regardless of whether or not the person is duly licensed by the State of Texas to carry a concealed handgun. No employee, other than a peace officer, may carry a weapon on or about his/her person at any time while conducting City business. The term "City work site" includes not only City buildings and property, but also other assigned work locations, City vehicles and City equipment. The term "City building" means any and all buildings or portions of buildings owned, leased, or otherwise controlled by the City of Midland.

Chapter III

Organization and Administration

Section 1 Organization of Personnel

a. The City Council. "The compensation of all appointive officers and employees shall be fixed by the City Council, who may increase or diminish compensation at will or abolish any appointive office entirely at any time." (Charter of the City of Midland, Article IV, Section 14c)

b. The City Manager. The City Manager will advise the City Council on personnel matters and recommend to them changes in personnel policies, changes in personnel rules and regulations, the compensation rates of appointive officers and other City employees, and any other changes that he may deem necessary or expedient. The City Manager is responsible for the administration of the personnel program of the City of Midland and to assist him in this function he may appoint a Director of Administrative Services.

c. Director of Administrative Services. The Director of Administrative Services and the Administrative Services Department, acting under his supervision, will represent the City Manager with regard to routine administration of all phases of these rules and policies.

d. Department Managers. Department managers are expected to effectively supervise their employees and to maintain proper working relationships. They may adopt and enforce departmental regulations not inconsistent with these rules and regulations. Department Managers will report on the efficiency of their subordinates and notify the Director of Administrative Services of changes in duties of their employees, in order that the City of Midland classification plan may be maintained. The Department Managers will recommend to the City Manager merit increases for their employees. Department Managers will have the power of appointment and removal in their departments, including the power to appoint division managers. The appointment of new employees by department managers will be made only from eligible applicants referred to them by the Director of Administrative Services with exceptions as noted under Chapter IV, Section 2. Transfers and reclassification should be consummated only after a study of information contained in the individual's file and after consultation with the Director of Administrative Services.

Chapter IV

Applications, Applicants, and Conditions of Employment

Section 1 Basis of Employment

All initial employment with the City of Midland shall be based on merit, ability, and physical and moral fitness, and may include any or all of the following:

a. Training and experience as reflected by the application form, plus other documentary evidence as to certification, registration, etc., if requested;

b. Job related written and/or performance tests as required;

c. A job related physical examination and/or functional capacity screening;

d. Background check for conviction of crimes involving moral turpitude and (in connection with jobs involving the operation of motor vehicles) moving traffic violations;

e. Character investigations made by the Administrative Services Department and/or the manager of the department concerned.

Exceptions to the procedures in this chapter may apply to: (1) Police officers, (2) Firefighters, (3)Seasonal recreation employees, (4) Department managers, (5) Council appointees and their assistants.

Section 2 Recruitment

This function is one of the services performed by the Administrative Services Department, for permanent, part-time, and seasonal employees paid by the City. The central office will maintain files of applications. These are to be obtained through personal contacts from individuals applying to the City, throughcontacts with established employment agencies, and/or by way of advertising. The Director of Administrative Services or those designated by him will conduct the initial recruiting, and screening. Suitable and eligible applicants will be referred to Department Managers or those designated by them for additional interview and employment.

Section 3 Requests for Personnel

When departments submit requests to the Administrative Services Department for persons to fill vacancies, such requests shall include the title of the position to be filled, contemplated initial salary or wages, desired training and/or experience qualifications and such other pertinent information as may be needed to enable the Administrative Services Department to most satisfactorily find the personnel being sought by the department. When circumstances permit, requests for personnel should be made areasonable period of time in advance of the actual need.

Section 4 Applicant Preference

Other qualifications being equal, departments will be expected to extend hiring preference to persons currently employed by the City of Midland.

Section 5 Residence

Other qualifications being equal, applicants who live inside the corporate limits of the City of Midland should be given preference over those living outside the City limits when appointments to positions with the City are being made.

Section 6 Announcements

All positions will be opened to applicants outside the city organization, at the department's discretion, and shall be posted for at least 5 working days. If a shorter publication period is required due to an emergency, written justification should be included with the requisition and must be approved by the City Manager.

Section 7 Application and Selection Procedures

All persons seeking initial employment or re-employment will be required to complete an application with the Administrative Services Department. Applications will be maintained by the City of Midland's Administrative Services Office, City Hall, 300 N. Loraine. Referrals will be made from the City of Midland's applicant database. Suitable and eligible candidates will be selected according to the requirements the department places on the requisition; which will include education, skills, experience and any affirmative action requirements, etc. Candidates will be required to complete typing, data entry, aptitude and/or psychological testing when necessary.

Recruiting departments shall only interview those persons who have completed a City of Midland Application Form. No formal job offers are to be made at the time of the interview. If the interviewer determines that a candidate is acceptable, the Administrative Services office will extend an offer of employment, contingent upon the successful completion of background investigations, physical examinations and/or functional capacity screening, and drug/alcohol screening.

Section 8 Appointments

As indicated above, no person shall be employed prior to completion of the application and selection process described above. The recruiting department shall notify the Administrative Services office of the preferred candidate and the date they would like to have the candidate begin employment. The department shall schedule an appointment with the Administrative Services Department for the enrollment/orientation of all new employees.

If no candidate possessing the minimum qualifications is located or approved by the recruiting department, a lesser-qualified person in a lesser classification may fill the budgeted position.

Section 9 Physical Standards

a. Medical Examination Requirements. All new and former employees will undergo a prescribed medical and/or functional capacity examination, to be made by some officially designated medical authority. The purpose of the examination will be the determination and certification of physical fitness and ability to perform duties of the position to which appointment is being considered. Such examinations are to be made as near the effective date of employment as possible.

The Administrative Services Department has the responsibility of making appointments and arrangements for obtaining the examinations, and matters concerning the initiation and completion of the requirements should be taken up with the Administrative Services Department.

b. Exceptions. Physical standards and requirements may vary somewhat in accordance with the duties and working conditions as generally set forth in the specifications for various positions and also as to anticipated length of employment.

The Administrative Services Department will advise the examining medical officer regarding any special or unusual requirements of this nature. The opinion and recommendation of the examining medical officer will govern and determine the acceptability of any person for employment, and particular attention will be given to the present or future capacity of the prospective employee to perform the required duties of the position, with or without a reasonable accommodation.

The examining medical officer will complete and forward to the Administrative Services Department a complete report on the prescribed form indicating his specific recommendations as to the suitability of the person for employment in the position indicated.

Section 10 Age Requirements

Age limits are indicated in some specifications for various classes of positions, upon the basis of a bona fide occupational qualification or statutory requirement.

Within statutory limits and restrictions, minors may be considered for employment in positions of a non-hazardous nature. In all instances, the parents of such minors shall be required to execute a waiver and release form, which will be provided by the Administrative Services Department. Any questions relative to matters of this nature, which cannot be satisfactorily solved by the Administrative Services department, will be referred to the City Attorney, whose ruling shall be final and governing.

Section 11 Standards of Conduct

To an unusual extent, and in a peculiar sense, employees of a municipal organization are the "Good Will Ambassadors" of the City, and such status involves a degree of duty and obligation regarding public and private conduct which is not common to many other classes of employment. The attitude and deportment of City employees should at all times be such as to promote the good will and favorable attitude of the public toward City Administration and its program and policies.

Section 12 Types of Positions

a. Full-Time. Full-time employees are employees who have a required workweek equaling or exceeding the full-time, established workweek.

b. Part-Time. Part-time employees are hourly paid employees working less than 30 hours each week. Part-time employees who are not temporary employees and who work at least 1,000 hours each year shall participate in the Texas Municipal Retirement System.

Part-Time employees shall not be eligible for Paid Time Off, holidays, or participation in any benefit program, including group insurance programs and other special benefit programs, unless specifically provided for in these policies, or required by State or Federal Law.

c. Temporary. Temporary employees are employees (whether full-time or part-time) who are anticipated to be working for the City for a comparatively short or definitely limited duration, not exceeding 960 working hours within a 12 month period. If a temporary employee who has had no break of time in his service and who works a full eight-hour day and a full normal work week is transferred to permanent status, he will be eligible for all the benefits of a permanent employee retroactive to the employment date of his uninterrupted service.

Section 13 Disqualification for Employment

The Director of Administrative Services may reject any application that indicates on its face that the applicant does not possess the minimum qualifications required for the position, and he may exclude or deny certification to any application for, but not limited to, the following reasons:

a. He does not possess the bona fide occupational qualifications necessary for the performance of the duties of the position to which he seeks appointment.

b. He has intentionally made false statements in his application or in the examination or has practiced or attempted to practice deception or fraud in connection with such application.

c. He is receiving pension benefits under a retirement plan of the City.

d. He refuses to participate in a retirement system, insurance program or social security program as required in these rules under Chapter X.

e. Any other grounds set forth in Chapter VIII of these rules.

Section 14 Probation Periods

a. Every employee, including part-time, seasonal, and temporary employees, shall be on probation for a period of one year (twelve months), unless the City Manager otherwise specifies a shorter period. In no case shall a probation period be less than six months.

b. When the employee first reports for work, he shall be notified of the fact that he will be on probation for the required number of months. During that time, the supervisor shall observe his work with particular care, train, and advise the employee in the performance of his duties, and let him know whether he is progressing satisfactorily. The probationary period of an employee entering duty beforethe 16th of the month shall start on the first day of the same month and that of an employee startingon or after the 16th of the month shall start on the 16th day of the same month.

c. At the close of the probation period, the Department Manager may do one of the following:
1) End the employee's probation status and process any pay increase that may be allowed under the pay plan structure (normally 5% for classified, non-public safety employees);
2) extend the probation period for a period not to exceed three months and so notify theemployee and the Administrative Services Department; or
3) dismiss the employee.

d. Probationary employees are entitled to all benefits as set out in these rules, however, probationary employees may be discharged with or without specific reason and shall not be entitled to the appeal procedure set out in these rules for any adverse action to or termination during the probation period. Probationary employees shall be entitled to a "name clearing hearing" as outlined in Chapter VIII of these rules.

e. Employees promoted or transferred within the City service shall be on probation for their first twelve months. During that time the Department Manager may cancel the promotion or transfer and assign the employee to his former or a similar position. If the former position is no longer available, nor a similar position available, the employee may be discharged under this policy.

Section 15 City of Midland Drug and Alcohol Testing Policy

a. **Introduction**

The City of Midland recognizes that drug and alcohol abuse ranks as one of the major health problems in the world and adversely affects an employee's performance and safety on the job.

Therefore, it is necessary and required by law for the City to provide a drug free working environment for its employees.

It is the City of Midland's intention to comply fully with the DOT's (Department of Transportation) regulations governing drug and alcohol use and testing, and these requirements have been incorporated into this Policy. In the event federal and state regulations are amended, this Policy and the applicable terms, conditions and/or requirements of this Policy shall be deemed to have been amended automatically at that time in order to reflect and be consistent with said regulations.

b. **Definitions and Terms Used in This Policy**

1) **Safety-sensitive function -** for the purpose of this Policy, means any of the following:
   a) Driving or operating any City- owned motor driven equipment on a full time, part time or temporary basis;
   b) Inspecting, servicing, repairing, or conditioning motor equipment; or
   c) Loading or unloading, giving or receiving shipments being loaded or unloaded.

2) **DOT driver** - means any current or prospective employee who may be required to operate a motor vehicle having a gross vehicle weight rating in excess of 26,000 pounds in interstate or intrastate commerce, or driver of a motor vehicle used to transport hazardous materials in quantity that requires the vehicle to be placarded regardless of the vehicle's size.

3) **Safety sensitive worker** - means any current and/or prospective employee who falls into the category of:
   a) Performers of safety-sensitive functions as described in Section 1 above;
   b) Operators of personal vehicles which are used for city business;
   c) Public safety personnel (Police, Fire, etc.); or
   d) Public safety communications personnel.

4) **City business** - includes, but is not limited to, work performed on or in City property including a City vehicle, and work performed on or in a non-City vehicle being used for conducting City business.

5) **Refusing to be tested - means:**
   a) Failing to provide adequate urine specimen for a drug test without a valid medical explanation;
   b) Failing to provide adequate breath for an alcohol test without a valid medical explanation;
   c) Failing to submit to a test as directed or engaging in any conduct, which clearly obstructs the testing process.

   Examples of obstructing the testing process would include leaving the scene of an accident without a valid medical or safety reason; not showing up for a test at the time directed withouta valid excuse; tampering with a urine specimen; tampering with an alcohol testing device; failing to provide required identification; failing to cooperate with federal, state or local law enforcement officers at the scene.

6) **Positive alcohol breath test -** is when the alcohol concentration level registers 0.02 or greater.

c. **Prohibited Drug and Alcohol Use and Activities**

1) The City of Midland prohibits its employees from:
   a) Using or being under the influence of or possessing illegal drugs
   b) Using or being under the influence of legal drugs that are being used illegally;
   c) Using or being under the influence of legal drugs whose use can adversely affect the ability of the driver to perform his or her job safely.
   d) Selling, buying, soliciting to buy or sell, transporting, or possessing illegal drugs while on City time or property (except for approved law enforcement activities.)

2) Employees are prohibited from:
   a) Using alcohol intoxicants within 4 hours of reporting for work;
   b) Being under the influence of alcohol at any time while at work;
   c) Possessing any amount of alcohol intoxicants on City property or in City vehicles (except for approved law enforcement activities.);
   d) Testing positive for alcohol;
   e) Refusing to be tested for drugs and alcohol as defined in Section b.5 of this Policy;
   f) Violating any applicable federal and/or state requirement governing the use of drugs or alcohol (See Chapter VIII).

d. **Required Tests**

1) **Pre-employment/Transfer Testing**
Once a job offer has been made, the applicant will be required to submit to a drug and alcohol test as part of his post-job offer physical. This is to be completed before the applicant is allowed to

report for work. This also applies to an employee who transfers from a non-covered position into a position that is covered by this policy on or after January 1, 1995.

Prior to taking a pre-employment drug and alcohol test, the applicant will be asked to execute a general consent and release form to be tested for drugs and alcohol.

All employment offers made by the City of Midland to hire an applicant, or transfer an employee are conditioned upon the applicant:

a) Completing all of the “consent to be tested” forms;
b) Taking and passing the drug and alcohol test as described by this policy;
c) Signing the authorization form for the City of Midland to obtain all of the applicant’s past drug and alcohol test results, including any refusals to test, for the previous two years if required by DOT regulations.

Any applicant who refuses or fails to comply with this policy will not be considered qualified for the position for which they have applied and will also be subject to adverse action, up to and including termination.

2) **Post-accident Drug and Alcohol Testing**

Any employee who is involved in an accident while operating a City vehicle or a personal vehicle for City business must submit to a post-accident drug and alcohol test when:

a) It involves the death of a human being;
b) The employee receives a citation for a moving violation (or the employee’s actions are cited in the official Peace Officer’s report as a contributing factor) and either a person requires immediate medical attention away from the scene or one or more of the vehicles must be towed away from the scene because of disabling damage. The drug and alcohol test is to be conducted within 2 hours post-accident, or 8 hours in unusual circumstances.

An employee who is required to take a post-accident drug and alcohol test will be assigned to a non safety-sensitive function while awaiting the results of the tests.

An employee who refuses or fails to submit to a post-accident drug and alcohol test, who testspositive for drugs and/or alcohol, who unnecessarily delays reporting to the test site following an accident, or who fails to comply with the City's post accident testing procedures, will be subject to adverse action, up to and including termination.

3) **Reasonable Suspicion Testing**

An employee will be required to submit to a drug and alcohol test whenever the City has a reasonable suspicion to believe that an employee has used drugs and/or alcohol in violation of these policies. Reasonable suspicion shall be based on specific, objective facts and reasonable inferences drawn from those facts in light of the experience that the employee has engaged in Prohibited Conduct with regard to the use of drugs and/or alcohol, as described in Chapter VIII of the City of Midland Personnel Policies.

Reasonable suspicion exists when an employee’s behavior, appearance, speech or body odor indicates drug and/or alcohol use; such must be personally observed and documented by City of Midland supervisory personnel who have received training regarding the physical, behavioral, speech, and performance indicators of probably drug and/or alcohol use.
If an employee is required to submit to a drug and alcohol test based on a reasonable suspicion regarding his/her use of drugs and/or alcohol (“Reasonable Suspicion Test”), the employee shall be informed that he/she may:

a) Submit to a Reasonable Suspicion Test;
b) Appeal the matter to another supervisor (to begin at the Division Manager level) authorized to act as an Appeals Officer; or
c) Refuse the Reasonable Suspicion Test and be subject to Adverse Action (as defined in Chapter VIII) up to and including termination.

If the employee requests an appeal, a hearing shall be conducted immediately with the supervisor requesting the Reasonable Suspicion Test, the Appeals Officer, and the employee present.

The Appeals Officer shall determine whether there is a reasonable suspicion to believe that the employee engaged in Prohibited Conduct with regard to the use of drugs and/or alcohol. The Appeals Officer shall have the authority to either:

a) Order the employee to submit to a Reasonable Suspicion Test; or
b) Order that the allegations against the employee be dismissed.

An employee who is required or ordered to submit to a Reasonable Suspicion Test shall be escorted by supervisory personnel to a testing site.

An employee who is required or ordered to submit to a Reasonable Suspicion Test is prohibited from performing safety-sensitive functions while awaiting the results of the Reasonable Suspicion Test.

An employee who receives a positive Reasonable Suspicion Test, or fails to timely submit to a Reasonable Suspicion Test, shall be subject to Adverse Action up to and including termination.

4) **Random Testing**

DOT drivers and safety sensitive workers are subject to random drug and alcohol testing.

The City of Midland will conduct drug and alcohol testing on a random, unannounced basis at the beginning, during or at the end of a regularly scheduled work shift. The testing dates and times are unannounced and are with unpredictable frequency throughout the year. The number of random testsconducted will (at a minimum) equal the amount required by federal and/or state regulations for employees who possess a commercial driver's license and perform in that capacity. Non-DOT employee random testing amounts will be at the discretion of the City Manager or designee.

The City of Midland shall maintain two separate pools for random testing, one for DOT drivers andone for safety-sensitive workers as defined in this policy. Every employee in the selected job classes or organizational divisions will have an equal chance of being selected each and every time the selection is conducted. Appropriate safeguards will be present to ensure that the identity of individuals cannot be determined prior to or at the time of their selection.

Whenever an employee is randomly selected to be tested, he or she will be instructed to report to the collection site immediately and will be given written notice of the testing procedures.

Any employee who tests positive or who refuses to submit to a test is subject to adverse action up to and including termination.

5) **Return to Duty Testing**

Should the City of Midland elect to consider reinstating or rehiring an employee who violates this policy, he or she will be required to submit to and pass a drug and alcohol test before he or she will be permitted to return to duty. For a return to duty alcohol test, the alcohol level must be less than 0.02.

Before being permitted to return to work, the employee must execute a "last chance agreement" and submit to at least six unannounced follow-up tests during the next 12 months.

Any employee who refuses to comply with the return-to-duty requirements, or who tests positive will be considered medically unqualified to perform his or her job and subject to adverse action up to and including termination.

6) **Follow up Testing**

An employee who is returned to duty after a positive drug or alcohol test is required to submit tounannounced follow-up testing as one condition of continued employment.

At a minimum, the employee will be required to submit to at least six tests during the next 12 months following the employees' return to duty. The date and time of such tests will be at the discretion of a substance abuse professional or the Division and/or Department Manager and conducted at random, without prior notice being given to the employee.

An employee who tests positive or who refuses to submit to a test, will be considered unqualified to perform his or her job and subject to adverse action up to and including termination.

e. **Testing Methodology and Integrity**

1) To insure the integrity of each test, all specimen collection, analysis, and laboratory procedures for personnel subject to 49CFR Part 40 and § 552.001, Texas Commercial Driver's License Act shall be conducted in accordance with DOT procedural protocols and safeguards. This includes, among other things:

a) Procedures to ensure the correct identity of each employee at the time of testing;
b) Strict chain of custody procedure to ensure that the specimen is not tampered with by the collection agency;
c) The use of a trained breath alcohol technician (BAT) and DOT approved testing devices for conducting alcohol tests;
d) The use of a laboratory which has been certified by the Substance Abuse and Mental Health Services Administration, a division of the U.S. Department of Health and Human Services (DHHS/SAMSHA);
e) The confirmation of an initial positive drug screen by a second analysis using gas chromatography/mass spectrometry (GCMS);
f) The confirmation of an initial positive alcohol screen by a second analysis;
g) The City's appointment of a qualified Medical Review Officer (MRO) to review positive drug test results before they are reported to the City of Midland's designated representative.

2) The City of Midland will provide employees with written and/or oral instructions regarding the conduct of the specific test before each testing event,

3) Drug Testing Procedures
a) Drug testing will require the employee to provide a specimen of his or her urine.
b) At a minimum, urine specimens will be analyzed for the presence of the following drugs: marijuana, cocaine, opiates, amphetamines, and/or phencyclidine (PCP).
c) Personnel not subject to 49 CFR Part 40 and § 522.001, Texas Commercial Driver's License Act, may be subject to the pre-employment drug test via the rapid drug test method conducted by a trained technician. Positive test results will be confirmed with City's Department of Health and Human Services approved testing facility. All other drug tests will be administered using the split sample methodology required by DOT. Under this methodology, the employee must provide at least 45 ml (milliliters) in a specimen container. The specimen will then be divided, into two specimens. The bottle containing 30 ml will be analyzed as the employee's primary

specimen. The second bottle will be held by the laboratory, to be sent to another lab at the employees' request in the event that the primary specimen is verified as positive. In the event the primary specimen is verified as positive, the employee will be notified by the City's MRO or by the City's designated representative of the positive test and given the option to have the second bottle sent to a different laboratory for analysis. To exercise this option, the employee must advise the city's MRO or designated representative within 72 hours of being informed of the primary positive result. The employee will be responsible for the cost of having the second sample analyzed.

d) Except for the use of methadone and medications containing alcohol, nothing in this Policy prohibits the employee's use of a medication legally prescribed by a licensed physician who is familiar with the employee's medical history and specific job duties and who has advised the employee that the prescribed medications will not adversely affect the employee's ability to perform his job safely. Medications prescribed for someone other than the employee, however will not be considered lawfully used when taken by the employee under any circumstances.

e) A "positive" drug test may be declared "negative" by the MRO, if the employee can prove with clear and convincing evidence that the drug which was used was prescribed by a licensed physician who is familiar with the employee's medical history and specific job duties. The determination of this will be made by the MRO.

f) In the event that the test result of an employee's primary specimen is positive, the employee will be notified by the MRO. If the MRO is unable to reach the employee after making reasonable efforts, then the employee may be notified by the City's designated representative. The MRO or the City's designated representative shall advise the employee that he or she has 72 hours to request that the MRO send the secondary specimen to a second NIDA approved laboratory for analysis. The employee will be responsible for the cost of the second test.

g) Before an employee's test result will be confirmed positive for drugs, the employee will be given the opportunity to speak with the City's MRO and demonstrate that there was a legitimate medical explanation for the positive test result. If the MRO determines that a legitimate medical reason does exist, the test result will be reported to the City as a "negative," If the MRO determines that a legitimate medical reason does not exist, the test result will be reported to the City as a "confirmed positive."

4) Alcohol Testing Procedures

a) Alcohol testing under this Policy requires that an employee must provide a breath specimen for any test conducted by, or for the City of Midland.

b) In addition to this policy, an employee could be subject to alcohol testing conducted by a federal, state or local law enforcement officer following an accident. The employee must provide either a breath or blood specimen, as directed by the law enforcement officer.

c) Alcohol tests will be administered using a breath specimen, taken by a breath alcohol technician (BAT) using an approved breath-testing device (EBT).

d) Before being tested by the City, each employee will be positively identified through presentation of a photo-identification or by other means approved by the City of Midland and will be required to execute a "Breath Alcohol Test" form provided by the BAT. An employee who refuses to provide proper identification, provides false identification, refuses to execute the forms, or who otherwise refuses or fails to cooperate will be treated as though he or she had tested positive and will be subject to adverse action, up to and including termination.

e) Prior to each alcohol breath test, the BAT will instruct the employee on how the test will be performed.

f) To protect each employee, the BAT will open and attach to the testing devise an individually sealed mouthpiece in the employee's view. The employee will then be directed to blow forcefully into the breath-testing device until an adequate amount of breath has been maintained.

g) In the event that the employee is unable to provide an adequate amount of breath for the initial or confirmatory test after several attempts to do so, the employee will be required to submit to an evaluation by a licensed medical physician to determine whether a valid medical condition does exist. If the physician determines that a valid medical condition does exist, the test result

will be considered as "negative". If the physician determines that a valid medical condition does not exist, the test result will be considered a "confirmed positive".

h) In the event that an employee provides an adequate breath specimen and the initial test registers an alcohol concentration level that is less than .02, the test results will be reported, as "negative" and no additional testing will be required at that time.

i) In the event that an employee provides an adequate breath specimen and the initial test registers an alcohol concentration of .02 or greater, a second confirmatory will be performed. If the confirmatory breath test registers less than .02, the test results will be reported as a "negative." The confirmation breath test will be administered no sooner than 15 minutes from the initial breath test and no longer than 20 minutes from the initial breath test. During the wait period for the confirmation test, the employee is not allowed to put anything into his mouth and should be discouraged from belching or burping.

f. Test Results - Adverse Action

1) An employee who violates these prohibitions will be subject to restrictions mandated by the DOT as described in part d, item 6 of this Section and subject to adverse action as described in ChapterVIII of the City of Midland's Personnel Policies Manual, up to and including termination.

2) Any employee whose test result is confirmed positive for drugs will be considered unqualified to perform or continue to perform his or her functions safely and subject to adverse action up to and including termination. The employee could also be subject to civil and criminal penalties imposed by DOT.

3) An employee whose confirmatory test registers .02 or more but less than .04 will be removed from service and placed on leave for a minimum of 24 hours. The employee will be subject to return to dutytesting and follow up testing and may be subject to adverse action up to and including termination.

   An employee whose confirmatory test registers .04 or greater will be removed from service andplaced on leave for a minimum of 24 hours and referred to a Substance Abuse Professional (SAP). The employee may be subject to adverse action up to and including termination.

   Before consideration can be given to returning an employee to duty who has had a BAC (breath alcohol concentration) of .04 or greater, the employee must complete the rehabilitation program as prescribed by the SAP and be subject to return to duty and follow up testing.

g. Confidentiality

The results of all individual drug and alcohol tests will be kept in a secure location with controlled access.

All individual test results will be considered confidential. The release of an individual employee's results will only be given with an individual employee's written authorization, or as is otherwise required by DOT regulations, or by other applicable federal or state law.

Section 16 Harassment Policy and Procedures

a. Prohibited Conduct

The City of Midland prohibits harassment based on race, color, religion, sex, age, national origin, disability or any other basis protected by federal, state or local law. It is the policy of the City of Midland that all employees shall be able to enjoy a work environment free from all forms of discrimination and harassment, including sexual harassment. In general, harassment may be defined as unsolicited words or conduct which tend to annoy, alarm or abuse another person, or a course of vexatious comment or conduct that is known or ought reasonable to be known to be unwelcome. Additionally, sexual harassment is a form of misconduct that undermines the integrity of the

employment relationship. No employee, either male or female, should be subjected to unsolicited andunwelcome sexual overtures or conduct, either verbal or physical. Such actions will not be tolerated.

Each employee has the responsibility to maintain the workplace free of all types of harassment. In keeping with such, the City of Midland has the responsibility of providing this policy to all employees and assuring them that they are not to endure insulting, degrading, or exploitative sexual treatment.

Specifically, no person shall threaten or insinuate, either explicitly or implicitly, that an employee's refusal to submit to sexual advances will adversely affect the employee's employment, evaluation, wages, advancement, assigned duties, shifts, or any other condition of employment or career development. In addition, while on duty or while acting in an official capacity, no employee shall knowingly or intentionally engage in conduct which has the purpose or effect of substantially interfering with an individuals' work performance or creating an intimidated, hostile, or offensive work environment; or conduct which subjects a member of the public to sexual harassment.

b. **Examples of Prohibited Activity**

Examples of unlawful harassment based on race, color, religion, sex, age, national origin, disability, or other protected basis includes, but is not limited to the following:

1) Verbal actions such as slurs, derogatory comments or jokes, epithets or unwanted sexual invitations, advances, or comments;
2) Physical actions such as unwanted touching, assault, blocking another's way, or interference with work;
3) Visual conduct such as sexually-oriented, pornographic and/or derogatory photographs, posters, drawings, cartoons, gestures, e-mail, or Internet sites;
4) Threats or demands to submit to sexual advances or requests as a condition of continued employment, offers of employment benefits in return for sexual favors, or to avoid some other negative employment action; and
5) Retaliation against any employee for making an allegation of harassment or for participating in such an investigation.

Sexual harassment is defined as unwelcome sexual advances, requests for sexual favors, and other verbal or physical conduct of a sexual nature that affects an employee in any one of the following ways:

1) Submission to such conduct is made explicitly or implicitly a term or condition of a person's employment;
2) Submission to or rejection of such conduct by an individual is used as a basis for employment decisions affecting that individual; or
3) Such conduct has the purpose or effect of unreasonably interfering with an individual's work performance or creating an intimidating, hostile, or offensive work environment.

c. **Procedures**

Any employee who believes that he or she has been subjected to general harassment as defined above should avail themselves of the grievance procedures outlined in Chapter IX of these policies. Any employee (or member of the public) who believes that he or she is or has been subject to sexual harassment by a City employee should report the alleged charge immediately, in accordance with the following procedures. (All information will be held in strictest confidence and will be disclosed only ona need to know basis to investigate and resolve the matter).

1) The individual alleging harassment may report the incident to their immediate supervisor, their Department Manager, the City Manager's Office or the Administrative Services Department. If an employee's immediate supervisor is involved in the alleged harassment, it is unnecessary to make a report to that individual. If accusations are made to any other person or if supervisory

personnel otherwise become aware of suspected acts of harassment, the matter should be directed immediatelyto the Administrative Services Department. The supervisor or administrator contacted will offer the individual alleging harassment the opportunity to complete a written statement specifically outlining the complaint. If the complainant does not put the complaint in writing, the person contacted still must notify the Administrative Services Department. Employees are encouraged to promptly report the alleged harassment within three (3) calendar days of the offense. The City of Midland takes all complaints seriously and handles them as promptly, thoroughly, and confidently as possible.

2) Once a written complaint is filed, the Administrative Services Department will conduct an investigation within 48 hours of their receipt of the complaint (excluding weekends and holidays).

3) If corrective action (other than adverse action as outlined in Chapter VIII of these policies) is deemed appropriate as a result of the investigation, the City Manager's Office may authorize the Administrative Services Department or the Department Manager to enforce said action as needed. Any adverse action recommended as a result of the investigation will be subject to approval by the Department Manager and will be subject to the appeals procedure outlined in Chapter VIII of these policies. If allegations prove not to constitute harassment, or the evidence provided does not substantiate the claim, the accused employee will not be subject to any adverse action. Employees who register complaints in good faith will not be subject to any retaliation. Employees who willfully register false accusations will face adverse action, up to and including termination.

Section 17 Workplace Violence Policy

The City of Midland is committed to maintaining a safe work environment, and has a zero tolerance policyfor violence in the workplace. “Workplace violence” is defined to include:

a. Physically aggressive, violent, or threatening behavior, such as attempts to instill fear in others or intimidation;
b. Verbal or physical threats of any sort;
c. Any other conduct that suggests a tendency toward violent behavior. Such behavior includesbut is not limited to, excessive arguing, profanity, threats of sabotage of City property, belligerent speech or demonstrated pattern of insubordination, and refusal to follow City policies and procedures;
d. Causing physical damage to City facilities or defacing property; or
e. With the exception of authorized City personnel as described in Chapter II, carrying firearms or weapons of any type or kind while conducting City business in or on City buildings and property, other assigned work locations, and City vehicles and equipment.

If any employee becomes aware of or observes any of the above-referenced behavior or actions by a co-worker, consultant, customer, third party vendor, visitor, or any other party, he or she should notify his/her supervisor, any member of management, and/or the Administrative Services Department immediately.

All reports of workplace violence will be taken seriously. To the extent possible, the identity of the reporting individual(s) will be kept confidential. The City will not tolerate retaliation in any form against anemployee who makes a report of workplace violence.

Any employee found to be in violation of this policy will be subject to adverse action up to and including termination.

Chapter V

Attendance and Leaves

Section 1 Hours of Work

All offices of the City, except those for which special regulations are required, shall be kept open continuously from 8:00 a.m., until 12:00 p.m. (noon) and from 1:00 p.m. until 5:00 p.m., Monday through Friday.

Section 2 Regular Working Day

For the purpose of these policies and all the following sections which deal with attendance and leave, a "regular working day" or an "accrued day" of leave shall be 8 hours for all full-time employees; provided, however, that for the Fire Department's 56-hour shift personnel ("Fire Department Shift Personnel"), a "regular working day" or "accrued day" shall be 12 hours. No employee may receive additional compensation by working during his or her leave without the express approval of the City Manager. Temporary employees will earn no Paid Time Off or other leaves except as otherwise expressly stated in these policies.

Section 3 Work Week

The work week will be determined by the needs of the City and set by the City Manager with due regard for certain State statutes.

Section 4 Overtime

Employees may be required to work overtime when necessary, in order to maintain the proper City services. All employees required to work overtime shall be compensated at rates set by the City Manager and pursuant to law. Many employee classifications are eligible for compensatory time off rather than paid overtime. No more than forty (40) hours of compensatory time may be accumulated.

Section 5 Attendance

An employee shall be in attendance at his or her worksite in accordance with the rules regarding hours of work, holidays, and leaves as determined by the employee's department. Excessive tardiness, neglect of duties, or unauthorized absences will be grounds for dismissal. All departments shall keep daily attendance records of employees. Any employee absent from work without notice for three (3) consecutive days will be considered as having abandoned the job. Such abandonment shall be considered a voluntary resignation from employment, and the City will process such separation of employment as a voluntary resignation.

Section 6 Inclement Weather / Emergency Closure

The City of Midland offices and activities will remain open and in operation, during established working hours unless the City Manager declares the offices, excluding emergency services, officially closed due to inclement weather or emergency closure due to unusual circumstances.

a. **Non-Sworn Employees.** For purposes of this Section, "non-sworn employees" are all City employees except peace officers and fire protection personnel.

b. **Reporting to Work.** If the City has not been officially closed, employees shall make a reasonable effort to report to work. An employee who is unable to report to work due to inclement weather shall notify the employee's supervisor in accordance with these policies and applicable departmental rules

and procedures. An employee who fails to so notify the employee's supervisor may be subject to adverse action, up to and including dismissal.

c. Compensation for Inclement Weather / Emergency Closing Absences.

Compensation for absences will be as follows:

1) **Official Closing.** If the City Manager closes a facility, a non-exempt non-sworn employee designated by the employee's Department Manager may work remotely to ensure department operations continue during the closure period. An employee who works remotely shall be paid for hours worked in addition to receiving the "City Closed" accrual for their scheduled shift. Hours worked remotely count as hours worked in determining overtime in accordance with the Fair Labor Standards Act. An employee who does not work remotely shall be paid for the employee's scheduled shift. Such "City Closed" hours shall not count as hours worked for the purpose of overtime. If an employee is on Paid Time Off or any other leave during the declared times of closing, the appropriate leave compensation will apply.

2) **No Official Closing.** If the City Manager does not close a facility and an employee is unable to report to work due to inclement weather, compensation will be handled in the following manner:

    a) **Non-exempt Employees.** A non-exempt employee who misses work hours due to inclement weather may use accrued vacation time or compensatory leave. If an employee has no paid leave available, the employee may be granted authorized leave without pay.

    b) **Exempt Employees.** An exempt employee who misses work hours due to inclement weather or other emergencies may use accrued vacation time if the absence is for a full workday.

3) **Delay Start / Early Closing.** If the City Manager delays the opening of a facility or closes a facility early due to inclement weather, an employee who reported for work will be paid "City Closed" for the remainder of the employee's normal shift. Employees who remain as part of a skeleton crew will be compensated for all hours worked in addition to receiving the "City Closed" accrual for hours the City was closed due to the delayed opening or early closure.

4) **Critical Service Personnel.** Employees designated by their Department Manager to provide critical services shall report to work on-site as provided by their department rules during an official closing. Non-exempt non-sworn employees who are required to report to work hereunder shall be paid for all hours worked in addition to receiving the "City Closed" accrual for their scheduled shift. Such personnel may include, but are not limited to, from the following:
    a) Airport Operations Personnel;
    b) Utilities Personnel;
    c) Transportation Personnel;
    d) Traffic Operations Personnel; and
    e) Solid Waste Personnel.

Section 7 Holidays

Municipal offices with the exception of those in emergency categories, shall be closed on the following legal holidays: New Year's Day, Martin Luther King Day, Presidents Day, Good Friday, Memorial Day, Juneteenth National Independence Day, Independence Day, Labor Day, Veterans Day, Thanksgiving Day, Friday after Thanksgiving, Christmas Eve Day, and Christmas Day. Firefighters shall be granted one (1) floating holiday designated as the "September 11th Floating Holiday." Non-exempt employees' holiday time will be

considered actual hours worked to determine eligibility for overtime.

Holidays falling on Sunday or Saturday. If a holiday falls on Sunday, the following Monday shall be observed, and if a holiday falls on Saturday, the preceding Friday shall be observed. The City Manager may designate any additional holidays which he feels may be justified in particular situations after giving due regard to the need for City services.

Eligibility for Pay for Holidays. An employee shall be eligible for holiday pay provided that the employee worked the last scheduled working day before and the next scheduled working day following the holiday or is otherwise on approved leave (either paid or unpaid) for those same days. In approving leave around a holiday, directors and division managers must ensure that adequate personnel are on duty to conduct departmental business.

Section 8 Vacation / Sick Leaves

a. Vacation
Effective October 1, 2023, vacation leave accruals shall be discontinued. The final accrual of vacation leave will be through the pay period ending September 30, 2023 (pay date of October 13, 2023). All vacation leave balances shall be converted to Paid Time Off on a one-to-one basis.

b. Sick Leave
Effective October 1, 2023, sick leave accruals will be discontinued. The final accrual of sick leave will be through the pay period ending September 30, 2023 (pay date of October 13, 2023). All sick leave balances shall be converted to Paid Time Off on a one-to-one basis.

c. Council Appointees, Other Employees, and Department Managers
Vacation and sick leave provided in any Council Appointee's, Other Employee's, or Department Manager's employment agreement shall be replaced with Paid Time Off.

Section 9 Paid Time Off ("PTO")

Effective October 1, 2023, the City will convert its Vacation and Sick Leave programs into a single Paid Time Off ("PTO") program. PTO is a comprehensive paid time off program that can be used for any type of time off from work that previously would have been covered under the Vacation and Sick Leave policies but does not include time taken under any other City's paid time off policies. In accordance with Texas Local Government Code 142.0013, PTO is equivalent to vacation time for fire protection and peace officer personnel.

Employees may not receive additional compensation by working during their PTO leave without the express approval of the City Manager. Temporary employees are not eligible for PTO.

a. PTO Accrual
All full-time employees are eligible to accrue PTO effective October 1, 2023 (Pay Date October 27, 2023) at the accrual rates listed below:

Full-Time Employees (based on a 40-hour work week)				
Years of Service	**Accrue Annual (Days)**	**Accrue/Paycheck 26 pays (Hours)**	**Maximum Days**	**Maximum Hours**
Upon hire	5			
Less than 1 year	20	6.1539		
At least 1 but less than 4 years	27	8.3077	118	944
At least 4 but less than 9 years	29	8.9231	128	1024
At least 9 but less than 15 years	31	9.5385	133	1064

At least 15 years, but not hired prior to June 1, 1990	33	10.1539	139	1112
Hired prior to June 1, 1990	44	13.5385	145	1160
Fire Department Shift Personnel (based on a 56-hour workweek)				
Years of Service	**Accrue Annual (Days)**	**Accrue/Paycheck 26 pays (Hours)**	**Maximum Days**	**Maximum Hours**
Upon hire	5			
Less than 1 year	20	9.2308		
At least 1 but less than 4 years	27	12.4616	118	1416
At least 4 but less than 9 years	29	13.3847	128	1536
At least 9 but less than 15 years	31	14.3077	133	1596
At least 15 years, but not hired prior to June 1, 1990	33	15.2308	139	1668
Hired prior to June 1, 1990	44	20.3077	145	1740

b. Requesting PTO

PTO may be used for various reasons, including personal days, vacations, and illness or injury (non-work related). PTO will be paid at the employee's regular rate of pay earned at the time the PTO is used. PTO does not count as hours worked for the purpose of overtime under the Fair Labor Standards Act (FLSA).

An employee shall schedule PTO in advance with the employee's supervisor or Department Manager for approval unless the employee uses it for an unexpected illness or injury. In the event of an unexpected illness or injury, the employee shall notify the employee's immediate supervisor prior to the time set for the employee to begin the employee's shift. If an employee takes PTO without prior approval for medical or emergency reasons, the City reserves the right to require medical documentation or other documentation of the reasons given for the unapproved PTO. If the employee is unable to contact the employee's supervisor, the employee may notify the Office of Administrative Services. In general, employees should seek approval for planned absences at least five (5) days in advance. Employees may not use more than ten (10) days of PTO days at one time without approval from the employee's Department Manager. Depending on staffing and departmental needs, PTO requests will be granted to the extent feasible.

c. Payment of PTO for Terminating Employees

A regular employee, Department Manager, Other Employee, or Council Appointee (unless the employee's employment agreement states otherwise) who terminates employment with the City, or whose employment is terminated by the City, shall be paid in a lump sum for unused PTO as listed below:

Years of Service	Payout % of Accrual
Upon hire	0.00%
Less than 1 year	0.00%
At least 1 but less than 4 years	70.00%
At least 4 but less than 9 years	73.00%
At least 9 but less than 15 years	76.00%
At least 15 years, but not hired prior to June 1, 1990	79.00%
Hired prior to June 1, 1990	82.00%

d. Payment of PTO for Retiring Employees

Retiring employees may request a maximum of 250 hours of the PTO payment listed in Subsection c above to be deposited into a Retiree Medical Reimbursement Account, which may be used to reimburse out-of-pocket medical expenses on a tax-free basis as authorized by the United States Internal Revenue Code. This provision shall not apply to any employee who is not eligible to retire at the time of separation of employment or whose employment is terminated under the provisions of Chapter VIII, "Adverse Action," or Chapter XII, "Employment At Will" of the City of Midland Personnel Policies.

For the avoidance of doubt, this Subsection applies only to the following employees:

i. An active employee who has completed a minimum of twenty (20) consecutive years of service prior to retirement;
ii. An active employee who is at least sixty (60) years of age and has completed a minimum of five (5) consecutive years of service with the City prior to retirement; or
iii. An active employee who is eligible for retirement through the Texas Municipal Retirement System or through the Midland Fireman's Relief and Retirement Fund.

Section 10 PTO Bank for Sick Leave

Beginning October 1, 2023, a Paid Time Off Bank ("PTO Bank") for sick leave shall be established and maintained by the City.

a. **Membership**

Membership in the PTO Bank shall be voluntary on the part of employees.

b. **Eligibility**

Any non-probationary, full-time employee with one full year of continuous service with the City of Midland is eligible to join.

c. **Enrollment**

Any eligible employee, within thirty (30) days following the completion of his or her first year of employment, may enroll in the PTO Bank by completing a membership application and donating two (2) days of the employee's accumulated PTO leave to the PTO Bank. In addition, any eligible employee may enroll during the open enrollment period. Open enrollment shall occur annually during the month of September, with the PTO donation being deducted from the 2nd paycheck of October. For the purposes of this policy, a PTO Bank Day is defined as 8 hours for regular employees and 12 hours for Fire Department Shift Personnel.

Any employee who was previously enrolled in the City's Sick Leave Bank shall be enrolled in the PTO Bank with no further donation or other action on the employee's part being necessary.

d. **Procedures**

1) The Administrative Services Department shall govern the operations of the PTO Bank.

2) A new employee must enroll within thirty (30) calendar days following the first-anniversary of his or her date of employment. Otherwise, participant enrollment will be held annually during the open enrollment period during the month of September.

3) An employee shall exhaust all of the employee's accrued PTO before the employee may utilize the PTO Bank.

4) An employee must be suffering from a serious health condition that makes the employee unable to perform the functions of the employee's job. A serious health condition is an illness, injury, impairment, or physical or mental condition that involves either inpatient care or continuing

treatment by a health care provider, including but not limited to a stroke, a heart attack, cancer, or injuries sustained in an automobile accident.

5) A physician's statement diagnosing the condition in detail and indicating the duration of treatment is required with the Request for PTO Bank Days.

6) Employees covered under a workers' compensation program may not utilize the PTO Bank for those conditions covered under workers' compensation.

7) Additional accrual donations may be required in the event the current PTO Bank balance falls below an acceptable level.

8) The total lifetime benefit under the PTO Bank program shall not exceed ninety (90) working days per individual.

e. **Application Process**

1) Should a member of the PTO Bank incur a long-term, serious illness or injury necessitating additional days after all of the member's accumulated PTO leave days have been used, the member may submit a Request for PTO Bank Days.

2) A member who requests days from the PTO Bank shall submit to the Office of Administrative Services Employee Benefits Division the following information within thirty (30) calendar days of the date that they have exhausted their accrued PTO leave days:

(i) A completed Request for PTO Bank Days form, which is available in the Employee Benefits Office; or
(ii) A detailed statement from a physician verifying the illness or injury.

3) Forms for the above purpose have been prepared and are available from the Employee Benefits Office.

4) The Employee Benefits Division will not consider a request for days from the PTO that does not conform to the requirements of this subsection.

5) If a member is unable to file a Request for PTO Bank Days, the immediate supervisor or Department Manager may initiate the request at the request of the member's family.

6) An applicant may be required to undergo a medical review by a second-opinion physician of the City's choice at any time at the expense of the City.

f. **Regulations**

1) Additional accrual donations may be assessed in the event the current PTO Bank balances falls below an acceptable level.
2) The Employee Benefits Division will review and act on all requests within thirty (30) working days of receipt of a Request for PTO Bank Days and necessary documents.
3) If a member is not satisfied with the Employee Benefits Division's decision regarding a Request for PTO Bank Days, the member may request a conference with the City Manager or the City Manager's designee by filing a written Request for Review with the Administrative Services Director within ten (10) business days of the member's receipt of the Employee Benefits Division's decision. The written Request for Review shall set forth contain all the relevant facts as well as the specific grounds for the review of the decision.
   (i) Upon receipt of a Request for Review, the City Manager or the City Manager's designee shall:
      1. schedule a conference to discuss the request; or

2. take action that addresses the matter described in the Request for Review to the reasonable satisfaction of the member.

(ii) Following a conference to discuss the request, the City Manager or the City Manager's designee shall provide the member a written decision regarding the request within ten (10) business days.

(iii) The decision or action taken by the City Manager or the City Manager's designee shall be the final decision of the City regarding the Request for Review.

Section 11 PTO Buy-Back

An eligible employee may elect to participate in the Paid Time Off Buy-Back ("PTO Buy-Back") program under which the City may buy back a portion of the employee's unused PTO leave as described in this Section.

a. For purposes of this Section, an eligible employee is a full-time employee who has completed at least one (1) year of continuous service before the beginning of the fiscal year (October 1st) during which the employee elects to participate in the PTO Buy-Back Program.

b. An eligible employee who elects to participate in the PTO Buy-Back program shall be subject to the following limits:

1) If the employee is not an employee of the Fire Department, the employee may elect for the City to buy back 40 hours of unused PTO leave per buy-back, with a maximum of two (2) buy-backs (80 hours) per fiscal year.

2) If the employee is an employee of the Fire Department who is not Fire Department Shift Personnel, the employee may elect for the City to buy back 20 hours of unused PTO leave per buy-back, with a maximum of four (4) buy-backs (80 hours) per fiscal year.

3) If the employee is Fire Department Shift Personnel, the employee may elect for the City to buy back 28 hours of unused PTO leave per buy-back, with a maximum of four (4) buy-backs (112) hours) per fiscal year.

4) The employee must have a minimum of three (3) days of PTO leave remaining after a buy-back. There will be no incremental buy-back.

c. An employee who elects to participate in the PTO Buy-Back program must complete and return the PTO Buy-Back form to the Administrative Services Department no less than 30 days prior to the scheduled buy-back.

d. An employee who elected to participate in the PTO Buy-Back and whose employment was terminated prior to receiving the PTO Buy-Back payment shall be subject to Section 9.c above and shall not receive the PTO Buy-Back payment.

e. A PTO Buy-Back payment will be an additional amount added to the employee's regular paycheck scheduled for the date(s) selected. Upon a PTO Buy-Back payment being made, the number of hours that were bought back will be deducted from the employee's accrued PTO leave. PTO buy-back is subject to deductions for retirement plan contributions under the Federal Insurance Contributions Act and all other applicable deductions.

f. The PTO Buy-Back program shall be subject to the availability of funds.

Section 12 Birthday Leave

Full time employees are eligible for one (1) day of paid birthday leave annually. Birthday leave shall be taken during the employee's birthday month unless the employee's Department Manager makes an exception. Exceptions may be made only after the employee's birthday and prior to December 31st.

An employee must request birthday leave from the employee's supervisor or Department Manager at least one (1) week prior to taking birthday leave.

An employee's unused birthday leave will not carry over to the next year, and an employee will not receive payment for unused birthday leave upon separation of employment.

Section 13 Bereavement Leave

All employees may be granted bereavement leave with pay for a period not to exceed three (3) days unless a longer period of time (not to exceed an additional two (2) days) is approved by the City Manager in case of death of a grandparent, grandchild or other member of their immediate family, which shall consist of the father, mother, son or daughter, husband, wife, brother or sister of the employee's spouse or the employee. Leave up to ½ day may be granted to an employee by his immediate supervisor to attend funerals for other than immediate family members. This leave shall not be charged against PTO or other accrued leave.

Part-time, seasonal, and temporary employees may be granted leave of absence without pay in such cases.

Section 14 Family/Medical Leave Act (FMLA)

The City of Midland complies with the Family and Medical Leave Act (FMLA) and will grant up to 12 weeks of leave during a 12-month period to eligible employees or up to 26 weeks of military caregiver leave.

The purpose of this policy is to provide employees with a general description of their FMLA rights. In the event of any conflict between this policy and the applicable law, employees will be afforded all rights required by law. If you have any questions, concerns, or disputes with this policy, please contact the manager of employee benefits.

a. **Definitions**

As used in this Section:

1) **Covered active duty** means (1) with respect to a member of a regular component of the Armed Forces, duty during deployment of the member with the Armed Forces to a foreign country, or (2) with respect to a member of the Reserve components of the Armed Forces, duty during the deployment of the member with the Armed Forces to a foreign country under a federal call or order to active duty in support of a contingency operation in accordance with 29 CFR 825.102.
2) **Covered service member** is a current member of the Armed Forces, including a member of the National Guard or Reserves, who is receiving medical treatment, recuperation, or therapy or is in outpatient status or on the temporary disability retired list for a serious injury or illness.
3) **Next of kin of a covered service member** is the nearest blood relative, other than the covered service member's spouse, parent, or child, in the following order of priority: blood relatives who have been granted legal custody of the covered service member by court decree or statutory provisions, brothers and sisters, grandparents, aunts and uncles, and first cousins, unless the covered service member has specifically designated in writing another blood relative as his or her nearest blood relative for purposes of military caregiver leave under the FMLA.
4) **Parent** means a biological, adoptive, step or foster father or mother, or any other individual who stood in loco parentis to the employee when the employee was a child. This term does not include parents "in law."
5) **Qualifying exigency** includes short-notice deployment, military events and activities, childcare, and school activities, financial and legal arrangements, counseling, rest and recuperation, post-deployment activities, and additional activities that arise out of active duty, provided that the employer and employee agree, including the agreement on timing and duration of the leave.
6) **Serious health condition** means an illness, injury, impairment, or physical or mental condition that involves inpatient care or continuing treatment by a health care provider. This can include conditions with short-term, chronic, long-term or permanent periods of incapacity.
7) **Serious injury or illness** is one that is incurred by a current member of the Armed Forces in the line of duty on active duty that may cause the member to be medically unfit to perform the duties of his or her office, grade, rank, or rating. A serious injury or illness also includes injuries

or illnesses that existed before the member's active duty and that were aggravated by service in the line of duty on active duty.

8) **Spouse** means (1) a husband or wife as defined or recognized in the state where the individual was married or (2) a husband or wife in a marriage that was validly entered into outside of the United States if the marriage could have been entered into in at least one state.

b. **Eligibility**

To be eligible for leave under this policy, employees must meet **all** of the following requirements:

1) Have worked at least twelve (12) months for the City of Midland.
2) Have worked at least 1,250 hours for the City of Midland over the twelve (12) months preceding the date when the leave would commence.

The 12 months of employment do not have to be consecutive. All periods of absence from work due to or necessitated by service in the Armed Forces are counted as hours worked in determining eligibility.

c. **Reasons for Leave**

To qualify as FMLA leave under this policy, the leave must be for one of the following reasons:

1) The birth of a child or placement of a child with the employee for adoption or foster care.
2) To care for a spouse, child or parent who has a serious health condition.
3) For a serious health condition that makes the employee unable to perform the essential functions of his or her job.
4) For any qualifying exigency arising out of the fact that a spouse, child or parent is a member of the Armed Forces on covered active duty or on call to covered active duty status.
5) To care for a covered service member with a serious injury or illness.

d. **Amount of Leave**

An eligible employee may take up to 12 weeks of FMLA leave during any 12-month period. The City will measure the 12-month period as a rolling 12-month period measured backward from the date an employee uses any leave under this policy. Each time an employee takes leave, the City will compute the amount of leave the employee has taken under this policy in the last 12 months and subtract it from the 12 weeks of available FMLA leave, and the balance remaining is the amount the employee is entitled to take at that time.

An eligible employee may take up to 26 weeks of FMLA military caregiver leave during a single 12-month period. The City will measure the 12-month period as a rolling 12-month period measured forward. FMLA leave already taken for other FMLA circumstances will be deducted from the total of 26 weeks available.

Eligible spouses who both work for the City may only take a combined total of 12 weeks of FMLA leave for the birth of a child, adoption or placement of a child in foster care, or to care for a parent (but not a parent "in-law") with a serious health condition. Both may only take a combined total of 26 weeks of leave to care for a covered service member (if each spouse is a parent, spouse, child or next of kin of the covered service member).

e. **Intermittent Leave or a Reduced Work Schedule**

Employees may take FMLA leave in one consecutive block of time, may take FMLA leave intermittently (e.g., take a day periodically when needed over the year) or, under certain circumstances, may take FMLA leave to reduce the workweek or workday, resulting in a reduced hour schedule. In all cases, the leave may not exceed a total of 12 workweeks (or 26 workweeks to care for a covered service member) in a 12-month period.

The City may temporarily transfer an employee to an available alternative position with equivalent pay and benefits if the alternative position would better accommodate the intermittent or reduced schedule in instances when leave for the employee or employee's family member is foreseeable

and for planned medical treatment, including recovery from a serious health condition or to care for a child after birth or placement for adoption or foster care.

For the birth, adoption, or foster care of a child, the City and the employee shall mutually agree to the schedule before the employee may take the leave intermittently or work a reduced-hour schedule. Leave for birth, adoption, or foster care of a child must be taken within one year of the birth or placement of the child.

When leave is needed for planned medical treatment, the employee shall make a reasonable effort to schedule treatment so as not to unduly disrupt the City's operations.

f. **Employee Notice Requirement**
An employee who takes FMLA leave must provide verbal or written notice of the need for FMLA leave to the employee's Department Manager or the manager of employee benefits.

When the need for FMLA leave is foreseeable, the employee shall provide the City with at least 30 days' notice. When an employee becomes aware of a need for FMLA leave fewer than 30 days in advance, the employee shall provide notice of the need for the leave either the same day the need for leave is discovered or the next business day. When the need for FMLA leave is not foreseeable, the employee shall comply with the City's usual and customary notice and procedural requirements for requesting leave, absent unusual circumstances.

Within five business days after an employee has provided this notice, the manager of employee benefits, or the manager's designee, will complete and provide the employee with a Notice of Eligibility and Rights and request a medical certification or other supporting documentation as necessary.

g. **Designation of FMLA Leave**
Within five business days after an employee has submitted the required medical certification or other documentation, the manager of employee benefits, or the manager's designee, will complete and provide the employee with a written response to the employee's request for FMLA leave using the FMLA Designation Notice.

h. **Employee Status and Benefits During Leave**
The City will continue an employee's health benefits during the FMLA leave period at the same level and under the same conditions as if the employee was continuously at work.

While on paid leave, the City will continue to make payroll deductions to collect the employee's share of insurance premiums. While on unpaid leave, the employee shall continue to make this payment, either in person, by mail, or by prearranged payment agreement. The payment must be received by the 15th day of each month. If the payment is more than 30 days late, the employee's healthcare coverage may be dropped for the duration of the leave.

The City will provide 15 days' notification prior to the employee's loss of coverage.

If the employee chooses not to return to work for reasons other than a continued serious health condition of the employee or the employee's family member or a circumstance beyond the employee's control, the City will require the employee to reimburse the City the amount it paid for the employee's health insurance premium during the FMLA leave period.

If the employee contributes to a life insurance or disability plan, the City will continue making payroll deductions while the employee is on paid leave. While the employee is on unpaid leave, the employee may request the continuation of such benefits and pay his or her portion of the premiums, or the City may elect to maintain such benefits during the leave and pay the employee's share of the premium payments. If the employee does not continue these payments and the City does not elect to maintain such coverage, the City will discontinue coverage during the leave. If

the City maintains coverage, the City may recover the costs incurred for paying the employee's share of any premiums, whether or not the employee returns to work.

i. **Employee Status After Leave**
An employee who takes leave under this policy may be asked to provide a fitness for duty clearance from a health care provider. This requirement will be included in the City's response to the FMLA request. Generally, an employee who takes FMLA leave will be able to return to the same position or a position with equivalent status, pay, benefits, and other employment terms. The position will be the same or one that is virtually identical in terms of pay, benefits, and working conditions. The City may choose to exempt certain key employees from this requirement and not return them to the same or similar position when doing so will cause substantial and grievous economic injury to business operations. Key employees will be given written notice at the time FMLA leave is requested of his or her status as a key employee.

j. **Use of Paid and Unpaid Leave**
An employee who is taking FMLA leave because of the employee's own serious health condition or the serious health condition of a family member must use all PTO and any other accrued leaves prior to being eligible for unpaid leave. PTO shall be exhausted prior to other accrued leave. Paid leaves run concurrently with FMLA leave if the reason for the FMLA leave is covered by the established policies.

Workers' compensation leave (to the extent that it qualifies) and injury leave will be designated as FMLA leave and will run concurrently with FMLA.

An employee who is taking leave for the adoption or foster care of a child must use all PTO and other accrued leaves prior to being eligible for unpaid leave.

An employee who is using FMLA leave for a qualifying exigency must use all PTO and other accrued leaves prior to being eligible for unpaid leave. An employee using FMLA leave to care for a covered service member must also use all PTO and other accrued leaves prior to being eligible for unpaid leave.

k. **Intent to Return to Work from FMLA Leave**
On a basis that does not discriminate against employees on FMLA leave, the City may require an employee on FMLA leave to report periodically on the employee's status and intent to return to work.

l. **Coordination of FMLA Leave with Other Leave Policies**
The FMLA leave policies do not affect any federal, state, or local law prohibiting discrimination or supersede any state or local law that provides greater family or medical leave rights. For additional information concerning leave entitlements and obligations that might arise when FMLA leave is either not available or exhausted, please consult the City's other leave policies or contact the manager of employee benefits.

Section 15 Military Leave

In time of war or national emergency, those employees of the City of Midland who are members of a retirement system or participating in a retirement system sanctioned by the City, or who are holding permanent positions shall be entitled to military leave or absence without pay if called to duty with the Armed Forces through the process of selective service or membership in reserve components of the Armed Forces. The City also acknowledges that time spent by employees on military leave often is relevant or complementary to their workplace responsibilities and that the skills, leadership, discipline, and teamwork experience that employees acquire during military service can prove valuable on the job.

a. Accrual Leave Credit. Credit for PTO or other accrual leaves shall accrue only during military leave allowance described below. However, employees may be allowed to draw pay from their PTO, or other accrued leaves during an approved military leave.

b. Military Leave Allowance. In accordance with Section 437.202, Texas Government Code:

1) A person who is an officer or employee of the City and who is a member of the Texas military forces, a reserve component of the Armed Forces, or a member of a state or federally authorized urban search and rescue team is entitled to a paid leave of absence from the person's duties on a day on which the person is engaged in authorized training or duty ordered or authorized by proper authority for not more than 15 workdays in a fiscal year. During a leave of absence, the person may not be subjected to loss of time, efficiency rating, personal time, or PTO.

2) An employee of the City who is a member of the Texas military forces, a reserve component of the armed forces, or a member of a state or federally authorized urban search and rescue team and who is ordered to duty by proper authority is entitled, when relieved from duty, to be restored to the position that the employee held when ordered to duty.

c. Retirement System Credits. Employees who leave their deposits with the retirement system while on military leave shall retain their membership in the retirement system. The period spent by such employees on military leave shall count toward membership service but shall not increase the retirement benefits due to the employee unless he makes retirement deposits to cover all or a portion of the time spent on military leave. If the employee does make such retirement contributions after returning from military leave, the City shall match such deposits of the employee. Employees desiring to withdraw their retirement deposits from the system when they enter upon military leave may do so. However, such action means that these employees will lose retirement credit for the years they belonged to the retirement system prior to beginning military leave. Notwithstanding the foregoing, current rules of a particular system shall control.

d. Reinstatement upon Return from Military Leave. All employees who have been granted a military leave of absence, and who apply for reinstatement with the City not later than thirty (30) days after being discharged or separated from the Armed Forces, will be re-employed in the same position or a position of like seniority and status at the then current rate of pay, provided such employees are physically and mentally qualified for reinstatement. If upon termination of such leaves of absence, employees are physically or mentally incapacitated and not qualified to perform the duties of the positions held at the time of commencement of such absences, employees shall be eligible for placement in such other positions for which they may qualify. In the event two or more employees have occupied the same position and have been called into service, the first employee occupying and leaving such position after the effective date of this policy shall have first priority on reinstatement; the second person occupying and leaving such position shall have second consideration, etc. An attempt will be made to re-employ every employee who enters the Armed Forces and upon his release desires to re-enter employment with the City of Midland.

e. Credit for Service Time. For the purpose of computing longevity pay, a military leave shall not be counted as a break in service and upon return of an employee to duty with the City his service time shall be increased by an amount equivalent to the time spent on military leave.

f. Accrued Balances of Paid Time Off and Other Accrued Leaves. Any classified full-time employee who is a member of a military reserve organization which requires participation in a training program, will be granted a leave of absence from their respective duties without loss of time or efficiency rating or vacation time or salary on all days during which they shall be engaged in authorized training or duty ordered or authorized by proper authority, not to exceed fifteen (15) days in any one calendar year. For the purposes of this policy, a military leave day shall be defined as any consecutive 24-hour period. The employee must provide the City with a copy of the written orders prior to taking leave.

Any full-time employee who is a member of a military reserve organization that is called to active duty may use their accrued time to supplement their military pay. If the employee desires to return to his/her position at the City upon completion of military service, a request for "Military Leave of Absence" must be approved by the Director of Administrative Services prior to the leave. A copy of the written orders should be attached to this request. If the written order is not available upon departure, it must be

provided as soon as possible thereafter.
The accrued balances of PTO, or any other leaves may be used to supplement the military pay up to a maximum of 80 hours per pay period.

Fire Department Shift Personnel will be allowed to supplement the military pay up to a maximum of 112 hours per pay period.

An employee who intends to use this benefit must notify the employee's supervisor of such intent by completing the "Military Leave of Absence" form available in the Administrative Services office. A supervisor may not designate the time without the employee's consent.

Section 16 Lactation Break

City of Midland will provide a reasonable amount of break time to accommodate employees desiring to express breast milk for their infant child, in accordance with and to the extent required by applicable law. The break time, if possible, should run concurrently with rest and meal periods already provided.

The employee's supervisor will coordinate with Employee Benefits Manager or designee to make reasonable efforts to provide employees with the use of a room or location other than a restroom to express milk in private.

The designated space:

a) may be the place where the employee normally works if there is adequate privacy (for example, the employee's private office or a lockable conference room or another identified space);
b) should have an electrical outlet, table and chair, lock or signage on door prohibiting entry when in use; and
c) should be within reasonable proximity to the employee's work area.

Employees should make requests for break time in writing to their supervisor or manager as soon as practicable after an employee learns of the need for lactation break time or the need for a change in previously approved lactation break times.

Section 17 Injuries

a. **On the Job Injury Leave**

An employee injured in the line of duty shall receive workers' compensation or injury leave benefits under the terms and conditions prescribed in the applicable programs and as required by law.

1) Leave and Compensation: Injury leave is defined as fully compensable absence from work arising from an on-the-job accidental injury. An employee injured on the job, in the line of duty, may be granted injury leave, which shall not be charged against his accumulated PTO or other accrued leave, for the period of time he is disabled and unable to perform his duties but said injury leave shall not exceed one hundred eighty (180) work days. Injury leave runs concurrently with FMLA. Healthcare provider's statement is required indicating that the employee is unable to return to work and shall be required for an employee to receive injury leave. Any injury leave so granted is deemed to be purely discretionary on the part of the City and may be terminated at any time by change of these policies. The total amount of injury leave granted in conjunction with any given injury shall never exceed one hundred eighty (180) work days.

(i) An employee shall forfeit all rights to injury leave if the employee:
1. Is found to be working, either part-time or full-time for pay;
2. Resigns for any reason;
3. Is discharged for any reason;
4. Retirement or death;
5. Fails or refuses to comply with or follow, or disregards or violates the treating physician's instructions regarding treatment and/or rehabilitation of the injury;

6. Refuses to perform light, partial or part-time duty when offered by the Department Manager or designee, which does not require him to perform activities, which are restricted by the treating physician;
7. Falsifies or misrepresents his physical condition or capacity;
8. Refuses to return to duty on the working day he has been released to duty by the treating physician;
9. Fails to submit an acceptable physician's statement when requested by his supervisor or designee; or
10. Has been injured as a result of his failure to observe safety policies, procedures, or instructions as determined by the Employee's Department Manager or designee.

(ii) Injury Leave ends when:
1. The injured worker reached one hundred and eighty (180) work days of leave; or
2. The injured worker returns to work with or without restrictions; or
3. A healthcare provider determines that no further healing or recovery from the injury can be expected (maximum medical improvement); or
4. The injured worker reaches the end of the Temporary Income Benefits period, which is 104 weeks after the eighth day of work-related disability (statutory maximum medical improvement).

If the injury is controverted, the employee exhausts all leave as defined above, or the employee experiences sporadic absence from work, the employee may be eligible to begin drawing weekly benefits payable under the Workers Compensation Act. If so, the employee may use accrued leaves to supplement their workers' compensation income and retain their active status with the City of Midland

2) Procedure:

(i) If an employee's injury meets the criteria for a serious health condition, the employee's injury leave shall run concurrently with FMLA leave, as provided in Section 14 of this Chapter.
(ii) An employee who sustains an injury or illness in the performance of the employee's duties shall fully and promptly report the injury or illness, however minor, to the employee's supervisor as soon as possible, but no later than the end of the business day. Written notification of the injury or illness must be received by the Workers' Compensation / Leave Coordinator within 24 hours of the incident in order for the employee to be granted injury leave.
(iii) Injury leave taken by an employee because of a substantiated and documented work-related injury sustained during the course of employment shall not be charged against the employee's PTO or other accrued leaves
(iv) During the approved injury leave, PTO shall continue to accrue.
(v) The Workers' Compensation / Leave Coordinator will coordinate with the employee's healthcare provider to determine whether the injury would allow an employee to perform modified temporary work or other duties.
(vi) An employee who is on injury leave shall update the employee's supervisor or the Workers' Compensation / Leave Coordinator of the employee's status at regular intervals.
(vii) An employee who is unable to perform the essential functions of the employee's position due to a disability, injury, illness, or medical condition (and reasonable accommodation is not possible) is not guaranteed a return to the employee's position at the conclusion of the disability, injury, illness, or medical condition.

b. **Off the Job Injury**

Injuries, Off the Job (Leave and Compensation). An employee injured off the job shall have the resulting absence from work, if any, charged against the employee's accumulated PTO leave.

Any employee so injured who has no accrued PTO leave or has exhausted the employee's PTO leave may receive compensation during his absence from work by using other accrued leave time, if any.

If an employee's injury meets the criteria for a serious health condition, the employee's time off shall run concurrently with FMLA leave, as provided in Section 14 of this Chapter.

All absence reporting requirements as outlined in Section 9, b. of this Chapter must be followed.

c. **First Responder Illness/Injury Leave**

1) Definitions. For purposes of this subsection:

(i) "Emergency medical services personnel" means a person described by Section 773.003, Health and Safety Code, who is a paid employee of the City of Midland.

(ii) "Firefighter" means a firefighter who is a permanent, paid employee of the City of Midland's Fire Department. The term includes the chief of the Fire Department.

(iii) "Line of duty illness or injury" means an illness or injury that occurs during the course and scope of employment.

(iv) "Police officer" means a paid employee who is full-time, holds an officer license issued under Chapter 1701, Occupations Code, and regularly serves in a professional law enforcement capacity in the Police Department, the Municipal Court, or other department of the City of Midland. The term includes the chief of the Police Department.

2) Illness / Injury Leave:

A firefighter, police officer, or emergency medical services personnel shall be provided a leave of absence for a line of duty illness or injury. This leave is with full pay for a period commensurate with the nature of the line of duty illness or injury. If necessary, the leave shall continue for up to one year. The City will continue the employee's health benefits during the leave period at the same level and under the same conditions as if the employee was continuously at work. Workers' compensation benefits shall be offset to the extent applicable by any amount for incapacity received as provided by this subsection. Leave under this subsection shall run concurrently with FMLA leave.

3) Use of PTO; Temporary Leave:

If a firefighter, police officer, or emergency medical services personnel is temporarily disabled by a line of duty injury or illness and the paid leave of absence granted under this subsection has expired, the employee may use accumulated PTO or other accumulated leaves for a period commensurate with the nature of the temporary disability. A firefighter, police officer, or emergency medical services personnel who requires additional leave shall be placed on unpaid temporary leave.

4) Medical Certification:

When requested by the Workers' Compensation / Leave Coordinator, a firefighter, police officer, or emergency medical services personnel who receives leave under this subsection shall provide medical certification and recertification documents from a health care provider to support the need for the leave.

5) Return to Duty:

If able, a firefighter, police officer, or emergency medical services personnel may return to modified duty as outlined in Section 18.a of this chapter, while recovering from a temporary disability. If medically necessary, the modified duty assignment may continue for up to one year.

A firefighter, police officer, or emergency medical services personnel who takes leave under this subsection may be required to provide a fitness for duty clearance from a health care provider upon return. After recovery from a temporary disability, a firefighter, police officer, or emergency medical

services personnel shall be reinstated at the same rank and with the same seniority the person had before going on leave.

Section 18 Return to Work / Inability to Return to Work

a. **Modified Duty**

"Modified Duty" is a temporary assignment which is for a specified and limited period and fulfills a necessary job function, appropriate to the employee's skills and level of experience as determined by the City, and which the employee can perform without violating any medical restriction imposed as a result of a temporary disability, illness or injury, for which the employee is compensated at the employee's normal rate of pay and benefits.

The number, availability and duration of such assignments are limited by departmental needs as determined by the Department Manager or the Department Manager's designee.

If restrictions as noted on the Physician's Release to Return to Work form are determined to be permanent, the employee shall not be eligible for a Modified Duty assignment.

1) Limitation of Modified Duty Assignment:
   The Modified Duty assignment shall end on the earliest of:
   (i) The date when the employee is released to the employee's regular schedule with no restrictions as evidenced on the Physician's Release to Return to Work form;
   (ii) The date when a physician determines the employee's has permanent restrictions;
   (iii) The date the Maximum Modified Duty Assignment Period ends; and
   (iv) The date the Employee fails to take a required medical examination, without good cause.

2) Maximum Modified Duty Assignment Period:
   A Modified Duty assignment may be intermittent or continuous, but in no event shall such an assignment continue for more than 180 work days after the date when the employee was initially unable to perform each and every essential function of the employee's job (the "Maximum Modified Duty Assignment Period"). At the end of the Modified Duty assignment, if an employee is unable to return to work without restrictions, the employee may be placed on the appropriate leave.

   Once an employee has been unable to perform each and every essential function of the employee's position that the employee held when the disability, illness or injury arose for 90 calendar days during a 12 month period or has exhausted all leave granted under previous sections of this Chapter (whichever comes first), the employee may request a meeting with the employee's Department Manager, the Director of Administrative Services, or the City Manager or the City Manager's designee in order to determine if the City has any current vacancies for which the Employee is qualified and is currently able to physically perform.

3) Procedure:
A "Physician's Release to Return to Work" form shall be completed by a physician (for injury leave, such physician shall be one of the designated providers selected for the City's workers' compensation insurance) and shall include the probable length of the restrictions and the nature of the restrictions. An additional statement confirming the ability to perform the Modified Duty assignment may also be required.

Once an employee has seen a physician and the physician has completed the Physician's Release to Return to Work form indicating that the employee can return to work, the applicable procedures below shall be followed:

(i) Return to work with Regular Hours and No Restrictions:
   The employee obtains the completed Physician's Release to Return to Work form from the physician indicating that there are no restrictions and that the employee has the

ability to work during the employee's regularly scheduled hours. This form must be submitted to the employee's supervisor and the Office of Administrative Services' Workers' Compensation / Leave Coordinator upon the employee's return to work.

(ii) Return to Work with Restrictions:
The employee obtains the completed Physician's Release to Return to Work form from the physician indicating that the employee needs (i) restricted duties (for example, limitations on lifting, walking, stooping, bending, etc.) and/or (ii) restricted number of hours worked per day or per week, with or without limitations on the duties performed.

1. If the physician releases the employee to return to work with restrictions, as evidenced by completion of the Physician's Release to Return to Work form, the form must be submitted to the employee's supervisor and the office of Administrative Services' Workers' Compensation / Leave Coordinator prior to or immediately upon return to work for consideration of a Modified Duty assignment. The supervisor and a representative from Administrative Services will review the restrictions and determine if the employee is eligible for a Modified Duty assignment. The employee must report for work at the time designated by the employee's supervisor.
2. If the employee is approved for a Modified Duty assignment, the employee shall comply with the restrictions indicated in the Physician's Release to Return to Work form. If the employee's restrictions change at any time, the employee shall notify the employee's supervisor immediately and submit to the supervisor and the office of Administrative Services Worker's Compensation / Leave Plan Coordinator a copy of the revised Physician's Release to Return to Work form.
While working a Modified Duty assignment, the employee may be required to provide periodic updates from the physician up to every 30 days. Additionally, the employee may be required to submit to a periodic physical examination as a condition of continued Modified Duty status.

3. If a Modified Duty assignment is not available, a representative from Administrative Services will determine what remaining leave benefits are available to the Employee, if any.

If the employee is unable to perform the Modified Duty assignment, the employee shall contact the physician to review and potentially revise the Physician's Release to Return to Work form.

b. **Inability to Return to Work**.

When a treating physician determines that an employee is permanently incapable of returning to work in the employee's full duty capacity, the City will accommodate such disability to extent it is required under the Americans with Disabilities Act, or the employee may apply for available positions within the City for which the employee is qualified. The Department Manager or his designee, based on the assessment of a licensed medical doctor that an employee is not able to perform the required physical duties or tasks of employee's present position (regardless of whether the incapacity is due to on the job injuries, off the job injuries, or illness), then the employee will not be returned to the employee's full duty with the City until a medical doctor states in writing that the employee is able to perform all the required physical tasks or duties of the position. Wherever possible, it is the policy of the City to provide Modified Duty to employees who have been released by a physician to return to work in a limited capacity.

Once an employee has exhausted all leave granted to the employee under previous sections of this Chapter or has been unable to perform each and every essential function of the position which he held at the time of injury with the City for 90 calendar days during a 12 month period (whichever comes first), the employee may request a meeting with the employee's Department Manager, the City's Director of Administrative Services, or the City Manager in order to determine if the City has any current vacancies for which the employee is qualified and is currently able to physically perform.

If a job vacancy exists that the employee is qualified for and can physically perform, the employee may apply for that position. The employee has the choice to either accept or decline any offered position:

1) If the offer is accepted, it is recognized and understood by the employee that the employee may have to take a reduction in salary.
2) Any employee so reassigned will be compensated at a pay rate in the pay range of the position to which the employee has been reassigned. However, the affected employee shall be entitled to start in the new band/zone equal to his previous salary if that band/zone is equal to or below the midpoint of the new pay range.
3) If the employee does not seek another position, or if the offer of a new position is declined, or if no job vacancy exists that the employee is qualified for and can physically perform, then the employee shall be allowed to exhaust any leave granted to the employee under previous sections of this Chapter

Under no circumstances will the City continue an employee's active status once the employee exhausts the leave granted under previous sections of this Chapter.

Once an employee is placed on inactive status, the City shall no longer pay the employee a salary, and the employee shall no longer accumulate PTO leave or other accrued leaves. The employee may continue to receive the employee's worker' compensation benefits, and the employee will also be able to retain the City's health insurance if the employee pays the rate as established by the City as required by the Consolidated Omnibus Budget Reconciliation Act (COBRA). Such coverage shall be limited to the minimum length of time established by the Act.

An employee who has been placed on inactive status under this policy may apply for positions with the City of Midland for which the employee is qualified and physically able to perform. Should an employee who has accepted another position with the City or been placed on inactive status due to an on the job injury recover and be able and qualified to perform all the tasks required of the employee's previous position within 12 consecutive calendar months from the date of the employee's acceptance of the new position with the City or placement on inactive status, then the employee will be offered reinstatement to the previous position should said position become vacant. The employee's recovery must be confirmed by a written statement from a licensed medical doctor. The City shall have the right to request a second medical opinion, but that second opinion shall be paid for by the City. Under this policy, no employee's
inactive status will continue for more than 12 consecutive months, unless required by federal, state or local law.

Section 19 Paid Quarantine Leave

a. Purpose.

The purpose of this policy is to provide for and maintain employment benefits for certain employees who are ordered to quarantine or isolate due to a possible or known exposure to a communicable disease while on duty.

b. Applicability

This policy applies to the following employees of the City:

1) Fire protection personnel; and
2) Peace officers of the Police Department and the Municipal Court.

c. Conditions

The paid leave and benefits provided by this policy are only available to an employee who is ordered to quarantine or isolate due to a possible or known exposure to a communicable disease while on duty by the employee's supervisor or the City's health authority. An employee may be required to provide proof of an order to quarantine and may be denied paid leave or benefits if the employee fails to provide proof within a reasonable time.

d. Benefits

If an employee is ordered to quarantine under the conditions in Subsection c above, the employee will receive all employment benefits and compensation for the duration of the leave, including paid leave accrual, pension benefits, and health benefit plan benefits that the employee would customarily be provided on paid leave.

e. Reimbursement for Expenses

If an employee is ordered to quarantine under the conditions in Subsection c above, the employee may request reimbursement for reasonable costs related to the quarantine, including lodging, medical treatment and transportation by submitting a reimbursement request via the Employee Self Service portal of the Human Resources Information System within five (5) days after returning from the leave ordered under this policy. An employee may be required to provide receipts or proof of payment with the request and reserves and may be denied reimbursement that the City deems unreasonable or unrelated to quarantine.

f. Effect on Paid Leave Balances

The City will not reduce an eligible employee's PTO or other paid leave balance for quarantine leave ordered under this policy.

Section 20 Peace Officer and Telecommunicator Mental Health Leave

a. Purpose

The purpose of this Section is to allow the use of mental health leave by peace officers and full-time telecommunicators employed by the City who experience a traumatic event while on duty.

b. Applicability

This Section applies to licensed peace officers and full-time telecommunicators employed by the City. For purposes of this Section, "telecommunicator" means a person authorized to act as a telecommunicator under Section 1701.405, Occupations Code.

c. Conditions

An employee to whom this Section applies shall be allowed up to three (3) days or (30) hours of paid mental health leave per calendar year, provided that:

1) the leave is:
   (i) approved by the employee's supervisor, the Chief of Police (for Police Department peace officers and full-time telecommunicators) or the Presiding Judge (for Municipal Court peace officers); or
   (ii) ordered by a mental health professional; and
2) the leave is taken as a result of a traumatic event that occurred while on duty.

d. Anonymity

The City will keep requests to take mental health leave and any medical information related to mental health leave under this policy confidential to the extent allowed by law and separate from the employee's general personnel file held by the Administrative Services Department. The City cannot guarantee the anonymity of information that is otherwise public or necessary to carry out the City's duties under applicable laws.

e. Effect on Paid Leave Balances

The City will not reduce an eligible employee's PTO, or other paid leave balance for mental health leave taken under this policy.

Section 21 Special Leave with Pay

Department Managers may grant employees special leave with pay and actual expenses to attend professional conferences, conventions or short courses or to visit other cities in the interest of the City, as authorized by the City Manager.

Section 22 Mental Health Day

The City is committed to protecting our employees' health, safety, and well-being. Employees may access confidential free counseling through the City's Employee Assistance Program (EAP).

Each full-time employee shall receive two (2) Mental Health Days per calendar year. An employee who wishes to take a Mental Health Day shall notify the employee's immediate supervisor prior to the start of the employee's scheduled shift, if practical. Documentation of the absence shall not be required. The reason for such absence (i.e., use of a Mental Health Day) shall be held confidential as reasonably practicable. Unused Mental Health Days shall not be carried over into the following year, and employees will not be provided with payment in lieu of taking Mental Health Days. In addition, upon an employee's termination of employment or retirement, no payment shall be provided for unused Mental Health Days.

Section 23 Community Service Leave

The City encourages employees to be active citizens and provides this leave to participate in organizations and activities that benefit the local community.

All full-time employees are eligible to request eight (8) hours of Community Service Leave per calendar year. Community Service Leave may be taken in one (1) hour increments. An employee who wishes to take Community Service Leave shall notify the employee's supervisor thereof and obtain approval prior to taking Community Service Leave. An employee, upon request, shall provide documentation to support the taking of Community Service Leave, and a failure to provide sufficient documentation thereof may result in the City's refusal to provide Community Service Leave. Community Service Leave may not be used for events with a political or religious purpose. Community Service Leave is noncumulative and nontransferable.

Section 24 Civic Duties Leave

All employees will be allowed time off with pay to attend the civic duties of voting in elections, serving as members of jury panels, or appearing before any tribunal by virtue of subpoena or summons.

Section 25 Leave of Absence

Department Managers may grant an employee one day of paid administrative leave in regard to disciplinary or safety issues. Any additional paid administrative leave in regard to discipline, safety, or investigations must be approved by the City Manager. Department Managers may grant leaves of absence without pay to regular employees, not to exceed thirty (30) days in duration. Requests for such leave shall be in writing and

submitted well in advance of the date the Employee will commence such leave. In granting such leaves, the Department Manager shall give primary consideration to the City's need for the Employee's services. Leaves of absence without pay may be granted for any legitimate purpose; however, employees will be obligated to show that the granting of such leave is to the interest of the City. Leaves of absence without pay in excess of thirty (30) days may be granted only with the approval of the City Manager and in no case shall exceed six (6) months.

Section 26 Absence without Leave

No employee may absent himself from duty for a single day or any part of a day without permission of his Department Manager. Any such absence will be without pay and the employee may be subject to adverse action. Any employee absent from work without notice for three (3) consecutive days will be considered as having abandoned the job. Any employee absent from work without notice for three (3) consecutive days will be considered as having abandoned the job. Such abandonment shall be considered a voluntary resignation from employment, and the City will process such separation of employment as a voluntary resignation.

Chapter VI

Wage and Salary Administration

Section 1 Application of Rates

All employees occupying a position in the classified or unclassified service shall be paid a salary or wage within the range currently set for that position's class under the pay plan as approved by the City Council. If an employee begins service in the middle of a pay period, he will be paid by the calculated hourly rate for the total hours worked during that time.

Section 2 Pay Rates for New Employees

Pay rates for new or probationary employees will normally be at the minimum step in the salary range established for the position that the employee is occupying. Department Managers, with the approval of the Administrative Services Director, may pay a new employee a beginning rate 15% above the minimum established in that range. Appointments with a pay rate of more than 15% above the minimum for a particular salary range may be made only with the approval of the City Manager.

Section 3 Pay Progression

Pay progression for employees in classified positions will be based on documented criteria that may include performance, attendance, certifications, training, skills testing, length of service, or other job specific factors. Pay progression dates and the amounts of the progressions shall be recommended on an annual basis by the City Manager and approved by the City Council through the budget process and/or amendments to the City's annual budget.

Section 4 Total Rate of Pay

No employee shall be paid at, or no salary advancement shall be made which would compensate an employee at, a rate more than the maximum or highest step in the salary range to which that employee's position has been assigned. Exceptions may only be made when deemed by the City Manager to be advantageous to the City service. Any such pay increases shall not exceed the assigned pay range by more than 10%. Market adjustments which impact City of Midland pay plans or cost of living adjustments which impact municipal employee salaries must be approved by the City Council.

The City of Midland takes all reasonable steps to ensure that employees receive the correct amount of pay in each paycheck and that employees are paid promptly on scheduled paydays. In the unlikely event that there is an error in the amount of pay an employee receives, he should promptly bring the discrepancy to the attention of his immediate supervisor or the Payroll Manager. If the employee has been underpaid, the City will pay the employee the difference as soon as possible. If the employee has been overpaid, arrangements will be made to return the overpayment to the City as soon as possible. Noemployee is entitled to retain any pay in excess of the amount he has earned according to his establishedrate of pay.

Section 5 Part-time, Temporary and Seasonal Rates

An employee who works regularly at less than the established workday or workweek shall be paid by the hour or at a salary proportional to the amount of time worked. The hourly or monthly rates for part-time, temporary or seasonal employees shall be established by the Department Manager concerned and the Administrative Services Director after giving due consideration to the ranges and pay rates in effect for similar positions in the current pay plan.

Section 6 Pay Rates for New Positions

Whenever a new position is created the Administrative Services Director shall, with the department manager involved, study the duties and responsibilities of the new position and in light of the existing positions and pay rates in the "Position Classification and Pay Plan" submit to the City Manager a recommendation for the proper pay range for the new position.

Section 7 Termination Pay

All employees who leave the service of the City for any reason shall receive all pay that may be due them with the following qualifications:

a. Regular employees shall be paid for unused PTO leave as set out in Subsection c of Section 9 of Chapter V.

b. An employee whose employment is terminated before the end of a pay period shall be paid for the total hours actually worked through the employee's termination date.

c. Effective October 1, 2023, any employee who is eligible to retire under either TMRS or FRRF at the time of the employee's termination of employment or retirement shall receive payments for accrued PTO as set out in Section 9 of Chapter V.

Section 8 Longevity Pay

All regular full-time employees shall be entitled to additional compensation at a rate of six dollars ($6.00) per month for each full year of continuous service with the City. The beginning of the pay period nearest the anniversary date the employee began employment with the City shall be the effective date of longevity pay increases. The rate of longevity pay shall coincide with the rate established by Texas Local Government Code Section 142.

Section 9 Performance Appraisal System

The purpose of the system is to improve employee productivity, to provide better communicationsbetween supervisors and those they supervise, to identify needs for training or other remedial actions among the workers, to provide upward mobility and the cultivation of skills and abilities, and to further the City service as a good place to work.

Evaluations shall be used as guides to judgment in granting permanent status to probationary employees, in offering promotions to employees, in recommending employees for merit pay increases, in determining that dismissals or other disciplinary actions based on performance are in fact for just cause, in avoiding any possibilities of discrimination or prejudice, and in other personnel matters.

The immediate supervisor of the employees being evaluated shall perform evaluations, but the evaluations may be reviewed and revised by Division and Department Managers before becoming final.

Evaluations of supervisory employees shall take into account the skill and judgment shown by such supervisors in the rating of those responsible to them.

Evaluations shall be completed shortly before the end of probation and thereafter on an annual basis.

An evaluation of an employee may also be conducted at any other time at the option of his supervisor; such specific evaluations are appropriate if the employee is being considered for promotion, is in need of remedial action, or is to be warned of possible disciplinary action.

If any employee believes that the performance evaluation is erroneous, unfair, or prejudiced, he may appeal the evaluation in the same way as is provided for any other grievance in Chapter IX of the personnel rules.

Section 10 Compensation Policy Statement

It shall be the policy of the City of Midland to maintain a pay structure for all municipal employees that will allow said employees the opportunity to receive reasonable, comparable wages in relation to comparable jobs in the relevant labor markets. The City Council shall establish both regional and statewide comparative markets consisting of municipalities in the population range of 75,000 to 200,000 (or larger if they are in the regional market) that shall be used in obtaining comparative wage data.

The City of Midland will also strive to maintain internal equity in the municipal job classification and pay structure through the use of a sound job analysis process and continue to promote the development and refinement of pay structures which reward employee performance and development.

Toward these ends, administrative regulations and pay structures have been adopted and may be modified as needed to accomplish the objectives of this policy, to comply with federal or state regulations, or to promote the efficiency of the City Service. At least one general review of the classification and pay plans should take place in each succeeding two-year period. The City Manager may appoint an Advisory Committee to conduct this review.

It shall be the responsibility of the City Manager to maintain administrative position classification and pay plan regulations in compliance with these policies.

Chapter VII

Transfer, Promotion, Resignation and Retirement

Section 1 Transfer

After notice to the Administrative Services Director, an employee may be transferred by a department manager at any time from one position to another position in the same or comparable class. If the transfer involves a change from one department to another department, both Department Managers must consent to the transfer unless the City Manager orders the transfer for the purpose of economy or efficiency. No person shall be transferred to a position for which he does not possess the necessary minimum qualifications, according to the classification plan.

Section 2 Promotion

Insofar as practical and consistent with the best interest of the City, all vacancies in the classified and unclassified service shall be filled by promotion of persons already employed by the City. If, in the opinion of the Department Manager or other person responsible for filling the vacancy, a position can best be filled by hiring a new employee, such information shall be forwarded to the Administrative Services Director who shall take the necessary steps to assist in recruiting qualified applicants for the position.

Section 3 Resignation

An employee who wishes to leave the employment of the City shall give at least two (2) weeks' notice to the supervisor before the effective date of his resignation. Such notice, either oral or written, shall state the reasons for such resignation. The Department Manager shall immediately notify the Administrative Services Director of such resignation and indicate the reasons therefore and whether the employee's services have been satisfactory.

Section 4 Termination Interview

The employee's termination interview and final paycheck will be received in the Administrative Services Office.

Section 5 No Recommendations or References

No person is authorized to act on behalf of the City in making recommendations or giving references with respect to former or current City employees. Any City employee who gives a recommendation or reference with respect to a current or former City employee shall be acting in his or her individual capacityand not as an agent, employee, or representative of the City of Midland, Texas, said act being beyond thescope of said employee's employment. Any employee who is sued or becomes involved in a claim or civil lawsuit due in any part to his or her giving a reference or recommendation shall not be entitled to a paidor other legal defense by the City of Midland.

Section 6 Requests for Employment Verification

Information regarding the employment of all current and former City employees shall be verified by Administrative Services only upon written request signed by the current or former employee. In absence of a written request signed by the current or former employee, Administrative Services shall be authorized to verify only the following information:

a. The date the employee began his employment with the City of Midland,

b. The date the employee ended his employment with the City of Midland,

c. The positions held while employed by the City of Midland,

d. The Department(s) to which the employee was assigned while employed by the City of Midland.

No person other than the Director of Administrative Services or the Director's designee shall be authorized to act on behalf of the City of Midland with respect to the verification of employment information.

Section 7 Personnel Files

The City of Midland retains employment records in a personnel file with the Administrative Services Department. The information contained in the file is the property of the City and must be maintained for government and record-keeping purposes. Therefore, all employees are required to notify the Administrative Services Department immediately if there is any change in relevant personal or employment information such as changes in address, phone numbers, marital status, emergency contact,insurance beneficiary, number of dependents, or legal name.

All files connected with an employee are considered strictly confidential, and access will be limited to those who have a job-related need to know the information, those who have been authorized to view the file, and as required by law. If an employee wishes to view his personnel file, he must submit written request with the Administrative Services Department. Upon receipt and approval of such request, an appointment will be scheduled for the employee to view his file. An employee may not remove or alter any information in the file in any way.

If an employee believes that information in his personnel file is incorrect, he may submit a written request to Administrative Services for change(s) to be made. If such a request is denied, the employee may request a statement of disagreement be placed in his file. This statement of disagreement will become a permanent part of the employee’s file.

The City of Midland considers falsification of personnel records to be a serious offense, and upon discovery can lead to disciplinary action up to and including termination.

Chapter VIII

Adverse Action

Section 1 Adverse Action

a. Purpose of Chapter

The purpose of this Chapter is to establish policies and administrative procedures for addressing Prohibited Conduct (as defined herein) and employment separation of City of Midland employees. The policies and procedures established herein are authorized and adopted, and the same shall be construed according to the plain meaning of its language unless defined otherwise. No policy or procedure established by this Chapter shall be enforced or interpreted in a manner that limits or abrogates protections afforded by law. The remedies set forth in this Chapter are exclusive.

b. Definitions.

In this Chapter:

1) "Adverse Action" means an administrative action taken by a Department Manager against an Employee because of the Employee's Prohibited Conduct. Said administrative actions include the following:
    a) Oral Reprimand;
    b) Written Reprimand;
    c) Suspension from employment without pay;
    d) Demotion from a current position to a lower position with lesser responsibility or compensation; and
    e) Termination of employment.
2) "Appeal Hearing" is the initial proceeding at which the Employee may contest an Adverse Action.
3) "Business Day" means a day on which the City of Midland is open for business.
4) "City" means the City of Midland.
5) "Department Manager" means the City department manager for the department that the Employee is assigned to. For the purpose of this Chapter, "Department Manager" also means an Assistant City Manager, Deputy City Manager, or the City Manager if a City department manager, Assistant City Manager, or Deputy City Manager is deemed to have engaged in Prohibited Conduct.
6) "Employee" means an employee of the City of Midland. For the purpose of this Chapter, "Employee" also means a Department Manager or Employee within the City Manager's Office if such person is deemed to have engaged in Prohibited Conduct.
7) "Hearing Officer" means the City official that presides over the Appeal Hearing.
8) "Lay-Off" means the employment separation between the Employee and the City that is not the result of an Adverse Action.
9) "Name-Clearing Hearing" means a proceeding before the City Manager at which the Employee may address allegations made by the City or its officials relating to the Employee's termination.
10) "Notice of Appeal" means the written notice submitted to the Administrative Services Department by the Employee seeking administrative review of an Adverse Action.
11) "Notice of Appeal to the Personnel Appeals Board" means the written notice submitted to the Administrative Services Department by the Employee seeking the Personnel Appeals Board's review of an Adverse Action.
12) "Notice of Hearing Officer Determination" means the written notice issued by the Hearing Officer containing the Hearing Officer's final determination resulting from the administrative review of an Adverse Action following an Appeal Hearing.

13) “Notice of Personnel Appeals Board Determination” means the written notice issued by the Personnel Appeals Board containing its final determination resulting from its review of an Adverse Action following a Personnel Appeals Board Hearing.
14) “Personnel Appeals Board” means the administrative body that presides over the Personnel Appeals Board Hearing.
15) “Personnel Appeals Board Hearing” means the final proceeding at which the Employee may contest an Adverse Action.
16) “Prohibited Conduct” means conduct of a character and nature that constitutes or is reasonably related to the following:
    a) Consumption and/or possession of alcohol or narcotics while on duty or using City-owned property;
    b) Consumption and/or possession of alcohol or narcotics in a manner that forms the basis of a crime;
    c) Criminal conduct;
    d) Delinquency;
    e) Dishonesty, including forgery, falsification of documentation, or any other falsifying action;
    f) Disruptive behavior that limits or restricts workplace efficiency;
    g) Failure to maintain necessary professional certifications or authorizations;
    h) Failure to perform employment duties;
    i) Immoral behavior, including behavior that may adversely affect the City or its officers, officials, employees, or agents, or behavior that may reasonably undermine the confidence of the public;
    j) Misappropriation or destruction of City property or information;
    k) Subversive behavior, including fighting, intimidation, profanity, insubordination, negligent or reckless actions, discourteousness, safety rule violations, misuse of City property, or violation of any established procedure, order, directive, or protocol;
    l) Unsatisfactory attendance;
    m) Failure to reasonably cooperate during an investigation involving alleged misconduct; and
    n) Violation of any policy, standard, or provision of the City of Midland, Texas Personnel Policies.
17) “Supervisor” means the person charged with the daily oversight and management of the Employee contesting an Adverse Action.
18) “Workday” means a day (including weekend days) on which the Employee is scheduled to report to work.

c. Notice Requirements

1) Any notice or communication required or permitted pursuant to this Chapter shall be in writing.
2) Subject to Section 1.c(3), a notice or communication required or permitted pursuant to this Chapter shall be deemed to be delivered and received on the date said notice or communication is:
    a) Personally delivered to the respective party to whom it is directed;
    b) Deposited by certified mail; or
    c) Sent by electronic mail.
3) Notwithstanding Section 1.c(2), a notice or communication that is sent to the City, or its employees or officials, shall be deemed to be delivered and received on the date that Administrative Services Department is in actual or physical receipt of said notice or communication.
4) The delivery of a notice or communication to the Employee shall be directed to one of the following:
    a) The City email address of the Employee;

b) The email address of the Employee's authorized representative;
c) The Employee's physical address on file with the Administrative Services Department; or
d) The physical address of the Employee's authorized representative.

5) The delivery of a notice or communication to the City or its officers, officials, or employees shall be directed to one of the following unless directed otherwise:
   a) The City email address of the current Administrative Services Director; or
   b) City of Midland
      300 N. Loraine Street
      Midland, Texas 79701
      Attn: Administrative Services Director.

d. Prohibited Conduct; Adverse Action

Employees shall refrain from engaging in Prohibited Conduct. An Employee that is deemed to have engaged in Prohibited Conduct may be subject to Adverse Action in accordance with the policies and procedures of this Chapter.

e. Discretionary Factors and Considerations Regarding Adverse Action Administration

If a Department Manager determines that the Employee engaged in Prohibited Conduct, the Department Manager may, in the Department Manager's sole and absolute discretion, incorporate the following factors and considerations in the Department Manager's decision regarding an Adverse Action to be administered to the Employee:

1) Nature of the Employee's duties;
2) Nature of the Prohibited Conduct;
3) Circumstances of the Prohibited Conduct;
4) The Employee's disciplinary history; and
5) Any other relevant facts or information.

f. Authorized Adverse Actions

Upon a Department Manager's determination that the Employee engaged in Prohibited Conduct, said Department Manager may administer (or cause to be administered) the following Adverse Actions:

1) Oral Reprimand – verbal discussion identifying the standard(s) of conduct that the Employee violated, and the corrective action required, if applicable. An Oral Reprimand may contain:
   a) Additional facts and information as deemed appropriate by the Department Manager; and
   b) A warning that future violations may result in additional Adverse Action(s) in accordance with this Chapter.
2) Written Reprimand – memorandum to the Employee (with a copy to the Employee's personnel file) identifying the standard(s) of conduct that the Employee violated, and the corrective action required, if applicable. A Written Reprimand may contain:
   a) Additional facts and information as deemed appropriate by the Department Manager; and
   b) A warning that future violations may result in additional Adverse Action(s) in accordance with this Chapter.
3) Suspension – temporary removal of the Employee from performing his/her duties and from receiving compensation. No Employee shall be suspended:
   a) For a period exceeding thirty (30) workdays; or
   b) More than thirty (30) workdays in any fiscal year.
4) Demotion – permanent reassignment of the Employee to a position with lesser responsibility or compensation.

5) Termination – permanent severance of the employment relationship between the Employee and the City.

g. Adverse Action Administration

Adverse Actions shall be administered in accordance with the following procedures:

1) Oral and Written Reprimands shall be issued as deemed appropriate by the Department Manager.
2) Suspension, Demotion, Termination
    a) Prior to issuing a Notice of Adverse Action to the Employee, a Department Manager shall deliver a copy of the proposed Notice of Adverse Action to the Administrative Services Department.
    b) Upon approval of the form of the Notice of Adverse Action by the Administrative Services Department, the Department Manager shall issue the Notice of Adverse Action to the Employee in accordance with the requirements of Section 1.c.

h. Notice of Appeal

1) If the Employee is issued a Notice of Adverse Action that results in a Suspension, a Demotion, or Termination, the Employee may seek administrative review of the Adverse Action by filing a Notice of Appeal.
2) A Notice of Appeal must be filed within two (2) Business Days of the affected Employee's receipt of a Notice of Adverse Action.
3) A Notice of Appeal shall consist of the following information:
    a) Employee name;
    b) Employee position;
    c) Department Manager name;
    d) Supervisor name; and
    e) General description of the basis for appeal.
4) A proper and timely Notice of Appeal shall be perfected upon the Administrative Services Department's receipt of the Notice of Appeal. If a Notice of Appeal does not contain the information required by Section 1.h(3), but is otherwise proper and timely, the Administrative Services Director shall notify Employee of such defect within two (2) Business Days following the Administrative Services Department's receipt of the Notice of Appeal.
5) Upon receiving notification that a Notice of Appeal does not contain the information required by Section 1.h(3), the Employee shall correct the defect and supplement the missing information within two (2) Business Days of the Employee's receipt of the notice required by Section 1.h(4).

i. Designation of Hearing Officer

1) Upon the perfection of a Notice of Appeal, the Administrative Services Director shall notify the City Manager of said Notice of Appeal within a reasonable amount of time after its delivery to the Administrative Services Department.
2) Upon receipt of the notice prescribed by Section 1.i(1), the City Manager shall designate a person to serve as the Hearing Officer to preside over the Appeal Hearing, which shall be:
    a) The City Manager;
    b) The Deputy City Manager; or
    c) An Assistant City Manager.
3) The City Manager shall notify the Administrative Services Director of the designation required by Section 1.i(2) following the same.
4) Upon request of the City Manager and agreement of the Presiding Judge of the Municipal Court, the Presiding Judge or Associate Judge of the Municipal Court may serve as the Hearing Officer.

5) If none of the foregoing individuals are available to serve as the Hearing Officer, the City Manager may designate another department manager with no knowledge of the facts that give rise to the Appeal Hearing to serve as the Hearing Officer.

j. Setting of Appeal Hearing

1) Following the designation of the Hearing Officer, the Hearing Officer shall provide the Administrative Services Director with dates and times of availability for the scheduling of the Appeal Hearing.
2) The Appeal Hearing shall occur no later than fifteen (15) Business Days following the perfection of the Notice of Appeal.
3) Notwithstanding Section 1.j(2), the Appeal Hearing may occur later than fifteen (15) Business Days following the perfection of the Notice of Appeal upon: (i) the mutual agreement of the Department Manager and the Employee; and (ii) the consent of the Hearing Officer.
4) Upon final setting of the Appeal Hearing, the Administrative Services Director shall send a Notice of Hearing to the Employee, the Hearing Officer, and the Department Manager. The Notice of Hearing shall consist of the following information:
    a) The name and position of the Employee;
    b) The name and position of the Employee's Supervisor;
    c) The date, time, and location of Appeal Hearing; and
    d) The reason/basis for appeal, as indicated by the Employee in the Notice of Appeal.

k. Appeal Hearing Procedure

1) The following persons shall be entitled to participate in an Appeal Hearing:
    a) Hearing Officer;
    b) Administrative Services Director;
    c) The Employee;
    d) A designated representative of the Employee (if any); and
    e) Department Manager.
    f) A representative of the City Attorney's Office may represent the Department Manager at the Appeal Hearing if the City Attorney receives and agrees to a request for representation from the Department Manager.
2) Minutes or Recording
    a) The Administrative Services Director shall take minutes of the Appeal Hearing or cause a recording to be made of the Appeal Hearing.
    b) The Administrative Services Department shall maintain the minutes or recording of an Appeal Hearing for at least three (3) years or as long as may be required by law.
    c) The Employee may provide, at the Employee's sole cost and expense, for a court reporter to record the Appeal Hearing. If the Employee provides for a court reporter to record the Appeal Hearing, the Employee shall provide the City with a copy of said recording (at no cost to the City) upon receiving a written request for such from the Administrative Services Director.
    d) The Employee may submit a written request for a transcript of an Appeal Hearing recording from the Administrative Services Department; provided, however, that the Employee shall pay all expenses associated with transcribing the Appeal Hearing recording, which shall be reasonably determined by the Administrative Services Director.
    e) Upon the submission of a request for a transcript of an Appeal Hearing recording, the Employee shall submit a deposit to the Administrative Services Department in an amount equal to the cost associated with transcribing the Appeal Hearing recording.
3) Witnesses
    a) The Employee, the Department Manager, and their respective witnesses shall be entitled to testify at the Appeal Hearing.

b) The Employee and the Department Manager shall be responsible for securing the availability of their respective witnesses.
c) The Employee and the Department Manager shall be entitled to call and question any witness who has knowledge of the incident(s) or alleged Prohibited Conduct that resulted in the Department Manager's administration of the Adverse Action.
d) The Hearing Officer shall have the right to exclude the testimony of any witness who is shown to not possess knowledge of the incident(s) or alleged Prohibited Conduct that resulted in the Department Manager's administration of the Adverse Action.
e) At the request of the Employee or the Department Manager, all witnesses shall be excluded from the Appeal Hearing; provided, however, that the Employee, the Department Manager, and their respective representatives may not be excluded (provided that a representative shall not testify). A request to exclude witnesses pursuant to this Section must be made prior to the commencement of any testimony.

4) Appeal Hearing Process

The Appeal Hearing shall proceed in the following manner:

a) Introduction; Swearing in of Witnesses

The Administrative Services Director shall make a formal introduction to the Appeal Hearing, which shall consist of the factual circumstances that form the basis for the Appeal Hearing. Said factual circumstances shall consist of, but not be limited to, the following:

1. Basis for Adverse Action as described in the Notice of Adverse Action;
2. Notice of Adverse Action administration date;
3. Notice of Appeal perfection date;
4. Identification of the Appeal Hearing participants; and
5. Identification of the representatives of the Employee and the Department Manager.

The Employee and the Department Manager shall notify the Administrative Services Director of their respective witnesses expected to testify during the Appeal Hearing. The Administrative Services Director shall swear in such witnesses prior to the elicitation of witness testimony.

b) Opening Statements

1. The Employee and the Department Manager (or their respective representatives) are entitled to give an opening statement prior to the commencement of any testimony. The Hearing Officer shall consider the opening statements of the Employee and the Department Manager in the following order:
    a. Department Manager
    b. Employee
2. The Employee and the Department Manager may waive the right to give an opening statement.

c) Case-in-Chief; Department Manager

1. The Department Manager's case-in-chief may consist of witness testimony, the submission of exhibits, and the Department Manager's testimony. The Hearing Officer shall have the sole discretion to determine the relevance of evidence presented during the Department Manager's case-in-chief.
2. Following the direct examination of a witness by the Department Manager, the Employee shall be afforded the opportunity to cross-examine said witness.
3. Following the cross-examination of a witness, the Department Manager shall be afforded the opportunity to re-examine said witness.
4. Following the re-examination of a witness, the Employee shall be afforded the opportunity to cross-examine said witness.

5. The Hearing Officer may examine a witness, the Department Manager, the Employee, or a representative of the Department Manager or Employee at any time.

d) Case-in-Chief; Employee
   1. The Employee's case-in-chief may consist of witness testimony, the submission of exhibits, and the Employee's testimony. The Hearing Officer shall have the sole discretion to determine the relevance of evidence presented during the Employee's case-in-chief.
   2. Following the direct examination of a witness, the Department Manager shall be afforded the opportunity to cross-examine said witness.
   3. Following the cross-examination of a witness, the Employee or the Employee's representative shall be afforded the opportunity to re-examine said witness.
   4. Following the re-examination of a witness, the Department Manager shall be afforded the opportunity to cross-examine said witness.
   5. The Hearing Officer may examine a witness, the Department Manager, the Employee, or a representative of the Department Manager or Employee at any time.

e) Closing Statements
   1. Following the cases-in-chief of the Department Manager and the Employee, the Department Manager and the Employee are entitled to give closing statements prior to the conclusion of the Appeal Hearing. The Hearing Officer shall consider the closing statements in the following order:
      a. Department Manager
      b. Employee
      c. Department Manager's rebuttal

f) Conclusion
   The Administrative Services Director shall conclude the Appeal Hearing and notify the parties of the date and time by which the Hearing Officer shall make a final determination.

g) The Rules of Evidence are not applicable to the Appeal Hearing; the Hearing Officer may consider all evidence submitted by the parties that the Hearing Officer deems relevant and consistent with the provisions of this Chapter.

h) The standard of compliance for observation of the rules and procedures contained in this Chapter shall be substantial compliance. The failure to observe any rule or procedure contained in this Chapter shall not form the basis of or give rise to any claims, damages, demands, suits, proceedings, or causes of action of any kind or character whatsoever against the City or its employees, agents, representatives, officials, Council or board members, including, but not limited to, claims for declaratory relief, claims under the state or federal constitutions, contract, tort, or other statutory or common law claims.

i) The Hearing Officer may adopt additional rules and procedures as may be deemed necessary for the orderly conduct of the Appeal Hearing. The Hearing Officer shall have the sole discretion to implement additional rules and procedures necessary for the orderly conduct of the Appeal Hearing.

5) Determination of Hearing Officer

a) The Hearing Officer shall consider the evidence presented at the Appeal Hearing and determine the following issues:
   1. Whether reasonable grounds exist to support the allegation(s) that the Employee engaged in Prohibited Conduct; and
   2. Whether a reasonable basis exists for the Department Manager's administration of the Adverse Action.

b) The Hearing Officer shall make his/her final determination within two (2) Business Days of the conclusion of the Appeal Hearing and issue a Notice of Appeal Hearing Determination.
c) Notice of Appeal Hearing Determination
    1. The Hearing Officer's final determination shall uphold, modify, or reverse the Adverse Action.
    2. The Hearing Officer shall issue a Notice of Appeal Hearing Determination to the Employee detailing said final determination, and issue a copy of the same to the Department Manager and the Administrative Services Director.
    3. If the Hearing Officer's final determination results in a suspension of five (5) Workdays or less, the Employee shall have no right to seek administrative review of the Adverse Action by the Personnel Appeals Board and the Hearing Officer's final determination shall be final.
    4. If the Hearing Officer's final determination results in a Suspension of more than five (5) Workdays, a Demotion, or Termination, the Employee shall have the right to seek administrative review of the Adverse Action by the Personnel Appeals Board. The Notice of Appeal Hearing Determination shall contain a statement indicating that the Employee has the right to seek administrative review of the Adverse Action by the Personnel Appeals Board in accordance with the requirements and procedures of this Chapter.
    5. A final determination resulting in the Employee's Suspension, Demotion, or Termination shall be stayed upon the filing of a Notice of Appeal to the Personnel Appeals Board in accordance with the requirements and procedures of this Chapter.

l. Notice of Appeal to the Personnel Appeals Board

1) If the Hearing Officer's final determination results in a Suspension of more than five (5) Workdays, a Demotion, or Termination, the Employee may seek administrative review of the Adverse Action by the Personnel Appeals Board by filing a Notice of Appeal to the Personnel Appeals Board.
2) A Notice of Appeal to the Personnel Appeals Board must be filed within two (2) Business Days of the Employee's receipt of a Notice of Appeal Hearing Determination.
3) A Notice of Appeal to the Personnel Appeals Board shall contain the information required by Section 1.h(3).
4) A proper and timely Notice of Appeal to the Personnel Appeals Board shall be perfected upon the Administrative Services Department's receipt of the Notice of Appeal. If a Notice of Appeal to the Personnel Appeals Board does not contain the information required by Section 1.h(3), but is otherwise proper and timely, the Administrative Services Director shall notify the Employee of such defect within two (2) Business Days following the Administrative Services Department's receipt of the Notice of Appeal to the Personnel Appeals Board.
5) Upon receiving notification that a Notice of Appeal to the Personnel Appeals Board does not contain the information required by Section 1.h(3), the Employee shall correct the defect and supplement the missing information within two (2) Business Days of the Employee's receipt of the notice required by Section 1.l(4).

m. Personnel Appeals Board; Composition

1) The Personnel Appeals Board shall consist of three (3) members, to include: (i) two (2) City Council members; and one (1) resident of the City who is not employed by the City.
2) All appointments to the Personnel Appeals Board shall be made by the Mayor.
3) The Mayor shall designate a Board member to serve as Chairman of the Personnel Appeals Board.

n. Setting of Personnel Appeals Board Hearing

1) Following the perfection of a Notice of Appeal to the Personnel Appeals Board, the Administrative Services Director shall notify the Personnel Appeals Board members of said notice and the Board members shall provide the Administrative Services Director with dates and times of availability for the scheduling of the Appeal Hearing.
2) The Personnel Appeals Board hearing shall occur no later than fifteen (15) Business Days following the perfection of the Notice of Appeal to the Personnel Appeals Board.
3) Notwithstanding Section 1.n(2), the Personnel Appeals Board hearing may occur later than fifteen (15) Business Days following the perfection of the Notice of Appeal upon mutual agreement of the Department Manager and the Employee.
4) Upon final setting of the Personnel Appeals Board Hearing, the Administrative Services Director shall send the Notice of Appeals Board Hearing to the Employee, Board members, and Department Manager. Upon final setting of the Personnel Appeals Board Hearing, the Administrative Services Director shall send a Notice of Personnel Appeals Board Hearing to the Employee, the Personnel Appeals Board members, and the Department Manager. The Notice of Personnel Appeals Board Hearing shall consist of the following information:
    a) The name and position of the Employee;
    b) The name and position of the Employee's Supervisor;
    c) The date, time, and location of Personnel Appeals Board Hearing; and
    d) The reason/basis for appeal, as indicated by the Employee in the Notice of Appeal.

o. Personnel Appeals Board Hearing Procedure

1) For purposes of the Personnel Appeals Board Hearing, the Personnel Appeals Board shall observe the rules and procedures prescribed by Section 1.k unless otherwise stated herein.
2) The Personnel Appeals Board shall serve as the final arbiter of all matters appealed pursuant to Section 1.l and shall have all rights, privileges, and obligations delegated to the Hearing Officer by Section 1.k for the purpose of this Section.
3) Open Meetings Act; Compliance
    a) The Personnel Appeals Board shall observe all applicable requirements of Chapter 551 of the Texas Government Code, as amended, with respect to any Personnel Appeals Board Hearing conducted pursuant to this Chapter.
    b) A Personnel Appeals Board Hearing shall commence and conclude in open session, and all final decisions of the Personnel Appeals Board shall be voted on in open session. For the purpose of this Chapter, "open session" means the portion of the Personnel Appeals Board Hearing that is conducted in a manner that is open to the public.
    c) The Personnel Appeals Board may conduct a hearing and deliberation in a closed session.
    d) At commencement of a Personnel Appeals Board Hearing, the Employee shall notify the Personnel Appeals Board of the Employee's election to have the hearing conducted in open session.
    e) If the Employee wishes for the Personnel Appeals Board's deliberation of the evidence presented at the hearing to occur in open session, the Employee shall object to the Personnel Appeals Board recessing to closed session following the announcement that the Board will recess to closed session.
    f) Upon receiving the Employee's objection pursuant to Section 1.o(3)(e), the Personnel Appeals Board shall not recess to closed session and said deliberation shall occur in open session.
    g) Notwithstanding the Employee's objection pursuant to Section 1.o(3)(e), the Personnel Appeals Board shall have the sole and absolute discretion to include any person in a closed session whose participation necessary to the matter under consideration.

4) Closed Session; Certified Agenda or Recording
    a) The Administrative Services Director shall keep a certified agenda or make a recording of a closed session held by the Personnel Appeals Board.
    b) A certified agenda of a closed session shall include the following:
        1. A statement of deliberation subject matter;
        2. A record of any action taken; and
        3. The date and time of the beginning and end of the closed session.
5) Determination of the Personnel Appeals Board
    a) The Personnel Appeals Board shall consider the evidence presented at the Personnel Appeal Board Hearing and make a determination as set forth in Section 1.k.5(a)i.
    b) The Personnel Appeals Board shall make its final determination by majority vote in open session following its deliberation of the evidence presented at the hearing. The decision of the Personnel Appeals Board shall be the final and cumulative determination of an Adverse Action matter.
6) Notice of Personnel Appeals Board Determination
    a) The Personnel Appeals Board's final determination shall uphold, modify, or reverse the Adverse Action.
    b) The Personnel Appeals Board shall issue a Notice of Personnel Appeals Board Determination to the Employee detailing said final determination, and issue a copy of the same to the Department Manager and the Administrative Services Director.
    c) The Notice of Personnel Appeals Board Determination shall be issued within three (3) Business Days following the adjournment of the Personnel Appeals Board Hearing.

p. Litigation; Judicial Review

The Employee who has exhausted all administrative remedies and appeals pursuant to this Chapter may file suit in a Midland County state district court.

1) A suit filed pursuant to this Section shall be by verified petition specifying the grounds of illegality regarding the final administrative decision. The verified petition shall be filed no later than the thirtieth (30th) day following the date on which the Employee has exhausted all administrative remedies and appeals pursuant to this Chapter.
2) A state district court shall confine its review of an action made pursuant to this Chapter to the City's record and any evidence of procedural errors alleged to have occurred by the Employee. In performing such review, a state district court shall apply the substantial evidence standard.
3) A state district court that reviews a final determination made pursuant to this Chapter shall not award any costs or attorney fees against the City.

Section 2 Lay-Off

a. Notwithstanding any contrary provision contained in this Chapter, a Department Manager is authorized to lay-off an Employee for reasons that include, but are not limited to, the following:
    1) Change in the Employee's job duties and/or functions;
    2) Change in the organizational structure of the City's administration; and
    3) Lack of funding for the Employee's position or other budgetary constraint.
b. If a Department Manager seeks to lay-off an Employee pursuant to Section 2.a, the Department Manager shall use reasonable efforts to give said Employee at least two (2) weeks' written notice when feasible; provided, however, that no such notice shall be due for the lay-off of a temporary or part-time worker.
c. An Employee that was previously laid off pursuant to Section 2.a and had satisfactory service while employed with the City shall be eligible for rehire upon the subsequent vacancy of a position for which such former employee is eligible.

Section 3 Exit Interview

Upon the request of a Department Manager or an Employee who is due to be laid off or terminated, an exit interview between the Department Manager or his/her designee and the Employee shall occur in the Administrative Services Office.

Section 4 Name-Clearing Hearing

Upon the finalization of any Termination and an Employee's exhaustion of all appeal procedures pursuant to this Chapter, the Employee shall be entitled to a Name-Clearing Hearing before the City Manager.

a. An Employee seeking a Name-Clearing Hearing shall submit a written request for such hearing to the Administrative Services Director.
b. Upon receipt of an Employee's request for a Name-Clearing Hearing, the Administrative Services Director shall deliver said written request to the City Manager within two (2) Business Days.
c. A Name-Clearing Hearing shall occur within ten (10) Business Days of the City Manager's receipt of the Employee's written request.
d. At the Name-Clearing Hearing, an Employee may address any allegation made by the City or its employees, agents, officials, Council or board members relating to said Employee's discharge.
e. Following the Name-Clearing Hearing, the City Manager may issue an exculpatory statement deemed to be just or necessary. If the City Manager issues an exculpatory statement, he/she shall cause said statement to be mailed to the Employee's address on file with the Administrative Services Department and place a copy in the Employee's personnel file. It shall be in the City Manager's sole and absolute discretion whether to issue an exculpatory statement.

Chapter IX

Grievance Procedure

Section 1 Policy

It is the policy of the City to treat all employees fairly and equitably. Any employee who feels aggrieved in his/her employment with the City has a right to present a grievance to appropriate management officials for prompt consideration. The filing of a grievance by an employee shall not reflect unfavorably on the employee's standing, and the employee should not fear reprisal or retaliation for utilizing the procedures below. For the purposes of this Chapter, capitalized terms used herein without definition shall have the meanings assigned in Chapter VIII.

Section 2 Definitions

a. "Grievance" means a formal complaint (and any relevant supporting documentation) raised by an Employee regarding an employment matter.

b. "Immediate Supervisor" means the person charged with the daily oversight and management of the Employee claiming a grievance.

Section 3 General Provisions

a. The City shall attempt to resolve a Grievance using reasonable efforts and due diligence with regard to the procedures prescribed by this Chapter. The time limits prescribed by Section 4 may be extended by mutual written agreement between the Employee and pertinent City representative.

b. The Supervisor's or Department Manager's failure to address a written Grievance in accordance with the procedures prescribed by Section 4 shall permit the Employee to proceed to the following Step and file the written Grievance with the Department Manager or City Manager, as applicable.

c. An Employee's failure to respond to a decision within the time limits specified in Section 4 shall be deemed to be an acceptance of said decision.

d. A Grievance shall be initiated within ten (10) Business Days of: (i) the date on which the matter that is the subject of the Grievance occurred, or (ii) the date on which the matter that is the subject of the Grievance became known to the Employee.

Section 4 Procedure

a. Informal Step: The Employee may discuss a Grievance with his/her Immediate Supervisor in an effort to resolve the matter informally.

b. Step 1:
   1) The Employee may file a written Grievance with his/her Immediate Supervisor and request a conference to occur within five (5) Business Days to discuss a formal resolution of the matter.
   2) Upon receipt of a written Grievance, the Immediate Supervisor shall either: (i) schedule a conference to discuss a formal resolution of the matter in accordance with Section 4.b(1); or (ii) take action that addresses the matter described in the written Grievance to the reasonable satisfaction of the Employee.

3) Following a conference to discuss a formal resolution of a Grievance, the Immediate Supervisor shall render a written decision regarding the Grievance within ten (10) Business Days.
4) Following an action taken by the Immediate Supervisor to address the matter described in the written Grievance, the Immediate Supervisor shall issue a memorandum that details the Immediate Supervisor's action.

c. Step 2:
1) If the Employee is not satisfied with the Immediate Supervisor's decision pursuant Section 4.b, the Employee may file the written Grievance with the Department Manager and request a conference to occur within five (5) Business Days to discuss a formal resolution of the matter. The Employee shall file the written Grievance within five (5) Business Days of the Employee's receipt of the Immediate Supervisor's decision.
2) Upon receipt of a written Grievance, the Department Manager shall either: (i) schedule a conference to discuss a formal resolution of the matter in accordance with Section 4.c(1); or (ii) take action that addresses the matter described in the written Grievance to the reasonable satisfaction of the Employee.
3) Following a conference to discuss a formal resolution of a Grievance, the Department Manager shall render a written decision regarding the Grievance within ten (10) Business Days.
4) Following an action taken by the Department Manager to address the matter described in the written Grievance, the Department Manager shall issue a memorandum that details the nature of the Department Manager's action.

d. Step 3:
1) If the Employee is not satisfied with the Department Manager's decision pursuant to Section 4.c, the Employee may file the written Grievance with the City Manager (through the Administrative Services Director) and request a conference to occur within ten (10) Business Days. The Employee shall file the written Grievance within five (5) Business Days of the Employee's receipt of the Department Manager's decision. The written Grievance shall contain all complaints and relevant facts that pertain to the matter described in the written Grievance.
2) Upon receipt of a written Grievance, the City Manager or his/her designee shall either: (i) schedule a conference to discuss a formal resolution of the matter in accordance with Section 4.d(1); or (ii) take action that addresses the matter described in the written Grievance to the reasonable satisfaction of the Employee.
3) Following a conference to discuss a formal resolution of a Grievance, the City Manager or his/her designee shall render a written decision regarding the Grievance within ten (10) Business Days.
4) Following an action taken by the City Manager or his/her designee to address the matter described in the written Grievance, the City Manager or his/her designee shall issue a memorandum that details the nature of the City Manager's or his/her designee's action.
5) A decision or action taken by the City Manager or his/her designee shall be final and satisfy the City's obligations regarding the consideration of the Grievance.

Section 5 Written Decisions and Memorandums

A written decision or memorandum issued pursuant to Section 4 shall be sent to the Employee, the Department Manager, and the Immediate Supervisor, as applicable. A copy of a written decision or memorandum issued pursuant to Section 4 shall be attached to a copy of the written Grievance and kept in the Employee's personnel file in the Administrative Services office.

Chapter X

Retirement System and Other Benefits

Section 1 Texas Municipal Retirement System

All regular employees are required as a condition of their continued employment to enroll in the Texas Municipal Retirement System. Seasonal, part-time, temporary, Fire Department employees and others exempt by State law, are not eligible to enroll in the retirement system, unless otherwise provided for herein or by State law.

a. Deposits. Each member of the retirement system shall, by payroll deduction, be required to contribute a percentage not to exceed seven percent (7%) of his monthly salary. The City shall also deposit a certain percentage for the benefit of each member employee as required by law.

b. Withdrawal of Deposits. If an employee leaves the service of the City for any reason, he may withdraw the deposits he has made plus any interest earned on such deposits.

c. Retirement Benefits and Restrictions. Benefits payable upon the death or retirement of an employee and any restrictions or limitations upon participation in the retirement system shall be in accordance with the provisions of the Texas Municipal Retirement System Act, Subtitle G of Title 8, Government Code.

Section 2 Firemen's Relief and Retirement

All employees of the regular City of Midland Fire Department shall be required as a condition of employment to participate in and make contributions to the Firemen's Relief and Retirement Fund. Contributions to and participation in the Firemen's Relief and Retirement Fund shall be in accordance with the provisions of Article 6243e, V.A.T.S.

Section 3 Federal Insurance Contributions Act

a. **Old-Age, Survivors, and Disability Insurance Tax (Social Security**)
All employees, except those who contribute to and participate in the Midland Firemen's Relief and Retirement Fund and others excluded by law, shall make contributions by payroll deductions to the Old-Age, Survivors, and Disability Insurance Tax (Social Security). All employees, upon commencement of employment with the City, must possess a Social Security Card.

b. **Medicare Tax**
All employees shall make contributions by payroll deductions to the Medicare Tax except those who are excluded by law.

Chapter XI

Safety

Section 1 General

These personnel rules are subject to modification when same are required to protect the safety or health of any employee. They are also subject to modification if same are necessary to comply with any state, federal, or local safety laws and regulations.

Section 2 Accident Review Board

The City Manager appoints the members of this Board with the Safety and Risk Manager as chairman. The primary function of the Board is to review all motor vehicle accidents and personal injuries occurring on the job. The Board shall consult with the administrative body of the City as well as Department/Division Managers, supervisory personnel, and other employees concerning the removal of hazardous conditions, disciplinary actions, and other improvements of the overall safety program. The Board shall not review any accident or personal injuries where a potential or existing claim or potential or existing lawsuit is pending against the City or a City employee.

Chapter XII

Employment at Will

Section 1 Council Appointees, Other Employees and Department Managers

a. When used in this Chapter, the following capitalized terms shall have the meanings set forth below:

"Council Appointees" shall mean City Manager, City Attorney, City Secretary, Municipal Court Presiding Judge, and Municipal Court Associate Judge.

"Department Managers" shall mean Director of Administrative Services, Director of Airports, Chief Information Officer, Director of Community Services, Director of Development Services, Director of Engineering Services, Director of Finance, Fire Chief, Director of General Services, Internal Auditor, Police Chief, Director of Solid Waste Management, and Director of Utilities, and any other department manager approved by the City Council.

"Other Employees" shall mean Deputy City Manager, Assistant City Manager, and First Assistant City Attorney.

b. All Council Appointees, Other Employees, and Department Managers shall be **EMPLOYEES AT WILL** and may be terminated at any time by the City of Midland with or without cause, subject to the City's personnel policies and procedures, and the terms and conditions of any applicable employment agreement.

c. In the event of an Involuntary Separation (as defined in this Chapter), a Council Appointee shall be entitled to receive a lump sum payment equal to six (6) months of his or her annual base salary as well as any other severance or separation compensation payment(s) set forth in his or her employment agreement. An Other Employee or a Department Manager shall be entitled to receive a lump sum payment equal to six (6) months of his or her annual base salary.

Notwithstanding any contrary provision of this Chapter, the City shall have no obligation to pay the severance sum(s) set forth herein if a Council Appointee, Other Employee or Department Manager is terminated for one of the following reasons: (i) conviction of a felony; (ii) conviction of a misdemeanor involving moral turpitude (which shall mean a misdemeanor involving dishonesty, fraud or deceit); or (iii) misconduct or violation of a City policy, rule, or regulation that by its nature has an adverse effect on the City, the confidence of the public in the integrity of the City, or the relationship of the employee and other employees (a *"Policy Violation"*). The determination of whether conduct constitutes a Policy Violation shall be in the sole discretion of the City Council for Council Appointees, the City Manager for a Deputy City Manager, an Assistant City Manager, or a Department Manager, and the City Attorney for the First Assistant City Attorney.

"Involuntary Separation" as used in this Chapter shall have the following meaning:

1) Resignation of a Department Manager or Other Employee within sixty (60) days following a reduction in salary in a greater percentage than an applicable across-the-board reduction for all City employees;

2) Termination of a Department Manager, a Deputy City Manager, or an Assistant CityManager by the City Manager;

3) Termination of the First Assistant City Attorney by the City Attorney; or

4) Termination of a Council Appointee by a vote of at least four (4) City Council members ata regular City Council meeting; or

5) Termination of a Department Manager, Other Employee or Council Appointee for a reason set forth in such employee's employment agreement with the City in accordancewith the terms and conditions of such employment agreement.

d. A Council Appointee shall enter into an employment agreement to be approved by the City Council. A Deputy City Manager shall enter into an employment agreement to be approved by theCity Manager. An Assistant City Manager shall enter into an employment agreement to be approved by the City Manager. The First Assistant City Attorney shall enter into an employment agreement to be approved by the City Attorney. A Department Manager shall enter into an employment agreement to be approved by the City Manager. In the event that any conflict exists between a provision of this Chapter and a provision of any such employment agreement, then theprovision of the employment agreement shall apply and take precedence over the conflicting provision contained in this Chapter.

e. A City employee deemed to be an exempt employee under the Fair Labor Standards Act shall only be suspended for period of at least one (1) week; provided, however, that a suspension of anexempt employee in good faith for an infraction(s) of a safety rule(s) of major significance may befor a period of less than one (1) week. This subsection shall be construed, interpreted, and administered in accordance with the Fair Labor Standards Act, as amended.

Section 2 Applicability

These rules, policies and procedures shall apply to and govern all employees of the City of Midland, expect when these rules affecting firefighters and police officers are inconsistent with State legislation. Words usedin the singular shall be construed to read in the plural and words used in the masculine gender shall be construed to read in the feminine. Failure to comply with these policies may result in disciplinary action being taken against an employee. Nothing in these rules, policies and procedures, except Chapter XII, should be construed as an employment agreement, guarantee of or contract for continued benefits from oremployment by the City of Midland. Severance as defined in these rules and policies shall mean salary and all other compensation and benefits. Severance shall be paid in a lump sum upon involuntary separation. The Mayor shall have the authority to execute and approve amendments and modifications to employment agreements entered into under Chapter XII. The standard for compliance by the City with these personnel policies, rules or procedures shall be substantial compliance. A violation of or failure to follow any rule or procedure shall not form a basis for any civil or criminal action against the City or any employee or official of the City who is acting on behalf of the City except as authorized by Sections 271.151 through 271.160 of the Texas Local Government Code, as amended. The administrative remedy set out in these rules and procedures is the exclusive remedy. There shall be no appeal to or action in any court except on constitutional or statutory grounds. These personnel rules, policies and procedures shall be implemented, administered and construed to comply with applicable local, state and federal laws. That the term Other Employees or Other Employee as used in these policies shall only mean the Deputy City Manager, Assistant City Manager and First Assistant City Attorney. That Chapter XII and its related definitions, and its related essential terms and benefits are a contract for providing services as authorized by Sections 271.151 through 271.160 of the Texas Local Government Code, as amended. The testing of employees conducted in conjunction with the administration and enforcement of the City's drug and alcohol testing policy shall be conducted in accordance with the United States Constitution, the Texas Constitution, federal and state laws, and regulations and judicial precedent. Except as outlined in Chapter XII, an

employee's at-will employment status is not modified by these policies and the Midland City Council reserves the right to amend these personnel policies in accordance with applicable statutes. As used in these rules and policies, Council Appointees shall mean the City Manager, City Attorney, City Secretary, the Presiding Municipal Court Judge and the Associate Municipal Court Judge. It is not required that employee sign these rules, policies and procedures, or any other document, in order to be bound by said rules, policies and procedures. Each employee shall be bound by these rules, policies and procedures by accepting employment with the City of Midland and performance of his or her job duties.



City of Midland, Texas
Personnel Policies

ORIGINAL PRINT, 1970

REVISED, July 11, 2023

Certificates

This certificate shall be placed at the beginning of the City's Personnel Policies. Resolution Number 2009-341, adopted by the Midland City Council on December 8, 2009, amends the Cityof Midland Personnel Policies. The City of Midland Personnel Policies are amended as if Resolution Number 2009-341 was entirely incorporated and written verbatim into the City of Midland Personnel Policies. I am authorized to execute this certification on behalf of the City ofMidland, Texas, by the City Charter, Ordinances of the City of Midland, Sections 271.151 to Section 271.160 of the Texas Local Government Code, as amended, and Resolution Number 2009-341.

W. Wesley Perry, Mayor

This certificate shall be placed at the beginning of the City of Midland Personnel Policies. Resolution No. 2011-067, adopted by the Midland City Council on April 12, 2011, amends the City of Midland Personnel Policies. The City of Midland Personnel Policies are amended as if Resolution No. 2011-067 was entirely incorporated and written verbatim into the City of MidlandPersonnel Policies. I am authorized to execute this certification on behalf of the City of Midland,Texas, by the City Charter, Ordinances of the City of Midland, Sections 271.151-.160 of the Texas Local Government Code, as amended, and Resolution No. 2011-067.

W. Wesley Perry, Mayor

This certificate shall be placed at the beginning of the City of Midland Personnel Policies. The City shall be bound by this execution and it is not necessary for the employee to execute any instrument to be bound. All employees accept these policies by actual performance.

Resolution No. 2011-185, adopted by the Midland City Council on August 9, 2011, amends the City of Midland Personnel Policies. The City of Midland Personnel Policies are amended as if Resolution No. 2011-185 was entirely incorporated and written verbatim into the City of Midland Personnel Policies. I am authorized to execute this certification on behalf of the City of Midland, Texas, by the City Charter, Ordinances of the City of Midland, Sections 271.151-.160 of the Texas Local Government Code, as amended, and Resolution No. 2011-185.

W. Wesley Perry, Mayor

This certificate shall be placed at the beginning of the City of Midland Personnel Policies. The City shall be bound by this execution and it is not necessary for the employee to execute any instrument to be bound. All employees accept these policies by actual performance.

Resolution No. 2018-225, adopted by the Midland City Council on June 27, 2018, amends the City of Midland Personnel Policies. The City of Midland Personnel Policies are amended as if Resolution No. 2018-225 was entirely incorporated and written verbatim into the City of MidlandPersonnel Policies. I am authorized to execute this certification on behalf of the City of Midland,Texas, by the City Charter, Ordinances of the City of Midland, Sections 271.151-.160 of the Texas Local Government Code, as amended, and Resolution No. 2018-225.

Jerry F. Morales, Mayor

This certificate shall be placed at the beginning of the City of Midland Personnel Policies. The City shall be bound by this execution and it is not necessary for the employee to execute any instrument to be bound. All employees accept these policies by actual performance.

Resolution No. 2021-065, adopted by the Midland City Council on May 25, 2021, amends the City of Midland Personnel Policies. The City of Midland Personnel Policies are amended as if Resolution No. 2021-065 was entirely incorporated and written verbatim into the City of MidlandPersonnel Policies. I am authorized to execute this certification on behalf of the City of Midland,Texas, by the City Charter, Ordinances of the City of Midland, Sections 271.151-.160 of the Texas Local Government Code, as amended, and Resolution No. 2021-065.

Patrick Payton, Mayor

This certificate shall be placed at the beginning of the City of Midland Personnel Policies. The City shall be bound by this execution and it is not necessary for the employee to execute any instrument to be bound. All employees accept these policies by actual performance.

Resolution No. 2023-XXX, adopted by the Midland City Council on July 11, 2023, amends the City of Midland Personnel Policies. The City of Midland Personnel Policies are amended as if Resolution No. 2023-XXX was entirely incorporated and written verbatim into the City of MidlandPersonnel Policies. I am authorized to execute this certification on behalf of the City of Midland,Texas, by the City Charter, Ordinances of the City of Midland, Sections 271.151-.160 of the Texas Local Government Code, as amended, and Resolution No. 2023-XXX.

Lori Blong, Mayor

Personnel Policies
With Explanations

Foreword

The intent of this document is to provide helpful personnel information to every employee of the City of Midland. It is compiled after much consideration by many members of the City staff. It is designed as a device for better understanding and communication among the employees.

This manual is to be used as a reference, and knowledge of its contents is essential.

Policy changes may occur often, and the information in this handbook will change. As an employee, your input is important and appreciated.

Table of Contents

Certificates ..... **ii**

Personnel PoliciesWith Explanations ..... **iv**
Foreword ..... **iv**

Table of Contents ..... **v**

Chapter I **1**
Purpose **1**
Section 1 Objectives 1
Section 2 Applicability 1
Section 3 Nondiscrimination 1
Section 4 Mission 2
Section 5 Vision 2
Section 6 Guiding Principles 2

Chapter II **3**
General Provisions **3**
Section 1 Political Activity 3
Section 2 Disclosure of Religious Affiliations 3
Section 3 Nepotism 3
Section 4 Oath of Office 4
Section 5 Solicitations 4
Section 6 Financial Responsibility of Employees 4
Section 7 Outside Employment 4
Section 8 City-Owned Vehicles 5
Section 9 Employment Conditions 5
Section 10 Amendment and Revision of Rules 5
Section 11 Possession of Weapons 5

Chapter III **6**
Organization and Administration **6**
Section 1 Organization of Personnel 6

Chapter IV **7**
Applications, Applicants, and Conditions of Employment **7**
Section 1 Basis of Employment 7
Section 2 Recruitment 7
Section 3 Requests for Personnel 7
Section 4 Applicant Preference 7
Section 5 Residence 7
Section 6 Announcements 8
Section 7 Application and Selection Procedures 8
Section 8 Appointments 8
Section 9 Physical Standards 8
Section 10 Age Requirements 9
Section 11 Standards of Conduct 9
Section 12 Types of Positions 9
Section 13 Disqualification for Employment 9

Section 14 Probation Periods 10
Section 15 City of Midland Drug and Alcohol Testing Policy 10
Section 16 Harassment Policy and Procedures 16
Section 17 Workplace Violence Policy 18

Chapter V 19
Attendance and Leaves 19
Section 1 Hours of Work 19
Section 2 Regular Working Day 19
Section 3 Work Week 19
Section 4 Overtime 19
Section 5 Attendance 19
Section 6 Inclement Weather / Emergency Closure 19
Section 7 Holidays 20
Section 8 Vacation / Sick Leaves 21
Section 9 Paid Time Off ("PTO") 21
Section 10 PTO Bank for Sick Leave 23
Section 11 Paid Time Off (PTO) Buy-Back 25
Section 12 Birthday Leave 25
Section 13 Bereavement Leave 26
Section 14 Family/Medical Leave Act (FMLA) 26
Section 15 Military Leave 29
Section 16 Lactation Break 31
Section 17 Injuries 31
Section 18 Return to Work / Inability to Return to Work 34
Section 19 Paid Quarantine Leave 36
Section 20 Peace Officer and Telecommunicator Mental Health Leave 37
Section 21 Special Leave with Pay 38
Section 22 Mental Health Day 38
Section 23 Community Service Leave 38
Section 24 Civic Duties Leave 38
Section 25 Leave of Absence 38
Section 26 Absence without Leave 39

Chapter VI 40
Wage and Salary Administration 40
Section 1 Application of Rates 40
Section 2 Pay Rates for New Employees 40
Section 3 Pay Progression 40
Section 4 Total Rate of Pay 40
Section 5 Part-time, Temporary and Seasonal Rates 40
Section 6 Pay Rates for New Positions 40
Section 7 Termination Pay 41
Section 8 Longevity Pay 41
Section 9 Performance Appraisal System 41
Section 10 Compensation Policy Statement 41

Chapter VII 43
Transfer, Promotion, Resignation and Retirement 43
Section 1 Transfer 43
Section 2 Promotion 43
Section 3 Resignation 43
Section 4 Termination Interview 43
Section 5 No Recommendations or References 43
Section 6 Requests for Employment Verification 43

Section 7 Personnel Files 44

Chapter VIII 45
Adverse Action 45
Section 1 Adverse Action 45
Section 2 Lay-Off 54
Section 3 Exit Interview 55
Section 4 Name-Clearing Hearing 55

Chapter IX 56
Grievance Procedure 56
Section 1 Policy 56
Section 2 Definitions 56
Section 3 General Provisions 56
Section 4 Procedure 56
Section 5 Written Decisions and Memorandums 57

Chapter X 58
Retirement System and Other Benefits 58
Section 1 Texas Municipal Retirement System 58
Section 2 Firemen's Relief and Retirement 58
Section 3 Federal Insurance Contributions Act 58

Chapter XI 59
Safety 59
Section 1 General 59
Section 2 Accident Review Board 59

Chapter XII 60
Employment at Will 60
Section 1 Council Appointees, Other Employees and Department Managers 60
Section 2 Applicability 61

City of Midland Personnel Policies

Chapter I

Purpose

Section 1 Objectives

The objectives of these rules are to facilitate efficient and economical services to the public and to provide for a fair and equitable system of personnel management for the City. While these rules constitute a precise statement of policies and procedures, they are not intended to cover every conceivable personnelsituation that may arise. As with any ordinance or regulation, these rules must be supplemented with administrative regulations in addition to the principles and policies set forth. For this reason, considerable latitude shall be given to the City Manager and the Administrative Services Director for administration of these policies within the framework set forth in these rules. It is expected that amendments and revisions affecting personnel policies will be made from time to time when they are necessary to meet changing conditions.

Section 2 Applicability

These rules, policies and procedures shall apply to and govern all employees of the City of Midland, except when these rules are inconsistent with State legislation. Words used in the singular shall be construed to read in the plural and words used in the masculine gender shall be construed to read in the feminine. Failure to comply with these policies may result in disciplinary action being taken against an employee. Nothing in these rules, policies and procedures, except Chapter XII, shall be considered or construed to establish an employment agreement or contractor right of employment with the City of Midland. Nothing in these policies, rules and procedures, except Chapter XII, should be construed as an employment agreement, guarantee of or contract for continued benefits from or employment by the City of Midland. Severance as defined in these rules and policies shall mean salary and all other compensation. Severance is to be paid in a lump sum upon involuntary separation. The Mayor shall have the authority to execute and approve amendments and modifications to employment agreements entered into under Chapter XII. The standard for compliance by the City with these personnel policies, rules or procedures shall be substantial compliance. A violation of or failure to follow any rule or procedure shall not form a basis for any civil or criminal action against the City or any employee or official of the City who is acting on behalf of the City except as authorized by Sections 271.151 through 271.160 of the Texas Local Government Code, as amended. The administrative remedy set out in these rules and procedures is the exclusive remedy. There shall be no appeal to or action in any court except on constitutional or statutory grounds. These personnel rules, policies and procedures shall be implemented, administered and construed to comply with applicable local, state and federal laws.That the term Other Employees as used in these policies shall only mean the Deputy City Manager, Assistant City Manager and First Assistant City Attorney. That Chapter XII and its related definitions are a contract for providing services as authorized by Sections 271.151 through 271.160 of the Texas Local Government Code, as amended. The testing of employees conducted in conjunction with the administration and enforcement of the City's drug and alcohol testing policy shall be conducted in accordance with the United States Constitution, the Texas Constitution, federal and state laws, and regulations and judicial precedent. Except as outlined in Chapter XII, an employee's at-will employment status is not modified by these policies and the Midland City Council reserves the right to amend these personnel policies in accordance with applicable statues. As used in these rules and policies, council appointees shall mean the City Manager, City Attorney, City Secretary, the Presiding Municipal Court Judge and the Associate Municipal Court Judge.

Section 3 Nondiscrimination

Equal employment opportunities shall be afforded to all qualified persons seeking employment with the City of Midland, Texas, and no person shall be refused employment because of race, age, color, creed, sex, national origin, disability, or genetic information, nor shall any person be promoted, demoted, transferred or discharged for reasons other than merit. Discrimination against any person in recruitment, examination, appointment, training, promotion, retention, discipline, compensation or any other aspect of

personnel administration because of race, age, color, creed, sex, national origin, disability, or genetic information is prohibited.

Section 4 Mission

We, the employees of the City of Midland, are passionate and energetic about the service we provide to each other and our community.

Section 5 Vision

Midland is a growing urban center in Texas, with a healthy economy and a vibrant downtown.

We enjoy great living, abundant leisure opportunities, and effective transportation-easy movement through our City.

Our diverse Midland community works together for a bright sustainable future; our City is recognized as a leader.

Section 6 Guiding Principles

1. Demonstrate integrity, respect and value everyone.
2. Exhibit professionalism by being accountable and dependable.
3. Exercise cooperation through a dedication to serve others.

Chapter II

General Provisions

Section 1 Political Activity

While in uniform or on active duty, an employee of the City of Midland may not engage in a political activity relating to a campaign for an elective office.

For the purposes of this section, a person engages in a political activity if the person:

a. Makes a public political speech supporting or opposing a candidate;

b. Distributes a card or other political literature relating to the campaign of a candidate;

c. Wears a campaign button;

d. Circulates or signs a petition for a candidate;

e. Solicits votes for a candidate;

f. Solicits campaign contributions for a candidate.

While out of uniform and not on active duty, an employee of the City of Midland may engage in a political activity relating to a campaign for an elective office, including each activity listed, except that the person may not solicit campaign contributions for a candidate other than from members of an employee organization to which that person belongs. See Texas Local Government Code 150.002.

Section 2 Disclosure of Religious Affiliations

No question in any text, in any application form or in any personnel proceeding, or of any appointing authority, shall be so framed as to attempt to elicit information concerning religious opinions or affiliations of any applicant or employee. No appointment to, or removal from, a position with the City of Midland shall be affected or influenced in any manner by any religious opinion or affiliation.

Section 3 Nepotism

a. No person related, within the second degree of affinity (marriage) or within the third degree of consanguinity (blood), to the Mayor, member of the City Council, or the City Manager shall be appointed to any office, position or clerkship or other service to the City.

b. In addition to the above stipulation, it is hereby provided that relatives or family members related within the second degree of affinity or the second degree of consanguinity (as defined in section "d" of this regulation) shall not be appointed to serve in positions in the same division (except for Police and Fire Departments, where the term “on the same shift assignment” shall be substituted for the term “in the same division”) or in a position where one relative is to supervise or have influence over the other's employment. Any Department Manager who feels that such appointments are justified and necessary must present to the Administrative Services Director the reason and needs which are the basis for requesting the appointment. The City Manager's approval will be needed to make the appointment official.

c. In the event of reorganization, promotion, or marriage between two City employees, the following shall apply:

1) If the affected employees are employed in different departments or different divisions of a department and neither is in a position to supervise or have influence over the other's employment, no change in employment status will be required,

2) If the affected employees are employed in the same division of a department (or one is in a position to supervise or have influence over the other's employment), one of them must seek a transfer to another division of that department or to another department. Said employee may apply for any position for which they meet the minimum qualifications, but cannot remain in the same division for more than 90 days. At the end of the 90-day period one of the two must either terminate employment or accept reassignment to a position selected by the City Manager. Such reassignment shall be at the City Manager's sole discretion with due regard for the individual's skills and qualifications and the organization's needs. The City Manager may extend the 90 day limit an additional 90 days if the City Manager finds an extension to be in the best interest of the City of Midland.

d. For the purpose of this policy, the following shall constitute familial relationships:

1) Consanguinity (Blood): 1st degree includes Mother, Father, Son and Daughter; 2nd degree includes Brother, Sister, Grandfather, Grandmother, Grandson, Granddaughter; 3rd degree includes Uncle, Aunt, Nephew, Niece, Great Grandson, Great Granddaughter, Great Grandfather, Great Grandmother.

2) Affinity (Marriage): 1st degree includes Spouse, Mother-in-law, Father-in-law, Son-in-law, and Daughter-in-law (for the purposes of this policy 1st degree relationship will also apply to Stepmother, Stepfather, Stepson, and Stepdaughter); 2nd degree includes Brother-in-law, Sister-in-law (for the purpose of this policy 2nd degree relationship will also apply to Stepbrother and Stepsister), Grandfather-in-law, Grandmother-in-law, Grandson-in-law, Granddaughter-in-law.

Relatives who are currently employed in situations that would be a violation of this policy on the date it becomes effective shall not have their current employment status affected.

Section 4 Oath of Office

"All officers of the City, whether elective or appointive, shall qualify by taking the oath prescribed by the constitution of this state and by executing such bond as may be required under the provisions of this Charter and the ordinances and resolutions of the City". (Charter of the City of Midland, Article IV, Section 8)

Section 5 Solicitations

No solicitation of funds of any character or for any purpose whatsoever shall be permitted among city employees on the job without the express approval of the City Manager.

Section 6 Financial Responsibility of Employees

Employees of the City of Midland are expected to maintain a good credit standing in the community and to pay their obligations promptly. The City shall in no way serve as a collecting agency or arbitrator. Failure of an employee to pay or make reasonable provisions for future payment of his debts to such an extent that such failure shall be detrimental to the City services may be just cause for dismissal.

Section 7 Outside Employment

Full-time City employees are not encouraged to accept additional employment from another source. However, in certain situations, occasional and part-time work will be allowed if approved by the Department Manager and the City Manager and if the work does not constitute a conflict of interest, does not interfere with the employee efficiently carrying out his normal duties with the City, and does not involve the use of City time or City equipment. If an employee shall become unable to perform the duties of his City job because of any injury or other incapacitating cause while in the employment of an employerother than the City, the City may, at its sole option, reduce the benefits otherwise granted by thesepolicies to whatever amount or degree the City deems to be justified.

Section 8 City-Owned Vehicles

All employees who drive City-owned vehicles in the performance of their duties are responsible for their proper operation. No City vehicle or piece of equipment used in normal operation or an emergency vehicle housed at an employee's home is to be used for personal business, except police. No City employee may drive a City vehicle if he does not have a valid driver's license.

Section 9 Employment Conditions

These rules shall become a part of the employment conditions of each employee and employment or continued employment with the City shall be contingent upon the employee's compliance with theprovisions of these rules. Within ninety (90) days after the adoption of these rules and at the time of employment of each new employee, a copy of these rules in handbook form incorporating pertinent phrases of these rules shall be furnished to each employee.

Section 10 Amendment and Revision of Rules

The Director of Administrative Services may make recommendations for amendment and revision ofthese rules to the City Manager. If the City Manager shall approve such changes, he in turn shall submit them to the City Council for their approval. All rules and amendments thereto shall become effective uponthe date of their approval by the City Council.

A copy of the Personnel Policies, Rules and Procedures, and all amendments or changes shall be filed in the office of the City Secretary and shall be available for inspection by all City employees and the public. Such filing shall constitute notice to all employees of the personnel policies, rules and procedures and of all amendments and changes. The Personnel Policies, Rules and Procedures manual, as amended or changed from time to time, shall supersede any conflicting provisions previously adopted. The rules, policies and procedures described herein may be amended, changed or terminated in whole or in part, at any time by the City of Midland. If an employee continues to work for the City of Midland for thirty (30) days after the effective date of any such amendment, change or termination, the employee will be deemed to have accepted such amendment, change or termination.

Section 11 Possession of Weapons

No employee, other than a peace officer, shall carry on or about his/her person, at a City work site, any instrument or weapon that is specifically designed, made, or adapted for the purpose of inflicting serious bodily injury or death, including, but not limited to, clubs, firearms, handguns, illegal knives, explosives, crossbows, bow and arrows, throwing stars and knuckles. No employee, other than a peace officer, shall carry a concealed weapon in any City building, regardless of whether or not the person is duly licensed by the State of Texas to carry a concealed handgun. No employee, other than a peace officer, may carry a weapon on or about his/her person at any time while conducting City business. The term "City work site" includes not only City buildings and property, but also other assigned work locations, City vehicles and City equipment. The term "City building" means any and all buildings or portions of buildings owned, leased, or otherwise controlled by the City of Midland.

Chapter III

Organization and Administration

Section 1 Organization of Personnel

a. The City Council. "The compensation of all appointive officers and employees shall be fixed by the City Council, who may increase or diminish compensation at will or abolish any appointive office entirely at any time." (Charter of the City of Midland, Article IV, Section 14c)

b. The City Manager. The City Manager will advise the City Council on personnel matters and recommend to them changes in personnel policies, changes in personnel rules and regulations, the compensation rates of appointive officers and other City employees, and any other changes that he may deem necessary or expedient. The City Manager is responsible for the administration of the personnel program of the City of Midland and to assist him in this function he may appoint a Director of Administrative Services.

c. Director of Administrative Services. The Director of Administrative Services and the Administrative Services Department, acting under his supervision, will represent the City Manager with regard to routine administration of all phases of these rules and policies.

d. Department Managers. Department managers are expected to effectively supervise their employees and to maintain proper working relationships. They may adopt and enforce departmental regulations not inconsistent with these rules and regulations. Department Managers will report on the efficiency of their subordinates and notify the Director of Administrative Services of changes in duties of their employees, in order that the City of Midland classification plan may be maintained. The Department Managers will recommend to the City Manager merit increases for their employees. Department Managers will have the power of appointment and removal in their departments, including the power to appoint division managers. The appointment of new employees by department managers will be made only from eligible applicants referred to them by the Director of Administrative Services with exceptions as noted under Chapter IV, Section 2. Transfers and reclassification should be consummated only after a study of information contained in the individual's file and after consultation with the Director of Administrative Services.

Chapter IV

Applications, Applicants, and Conditions of Employment

Section 1 Basis of Employment

All initial employment with the City of Midland shall be based on merit, ability, and physical and moral fitness, and may include any or all of the following:

a. Training and experience as reflected by the application form, plus other documentary evidence as to certification, registration, etc., if requested;

b. Job related written and/or performance tests as required;

c. A job related physical examination and/or functional capacity screening;

d. Background check for conviction of crimes involving moral turpitude and (in connection with jobs involving the operation of motor vehicles) moving traffic violations;

e. Character investigations made by the Administrative Services Department and/or the manager of the department concerned.

Exceptions to the procedures in this chapter may apply to: (1) Police officers, (2) Firefighters, (3)Seasonal recreation employees, (4) Department managers, (5) Council appointees and their assistants.

Section 2 Recruitment

This function is one of the services performed by the Administrative Services Department, for permanent, part-time, and seasonal employees paid by the City. The central office will maintain files of applications. These are to be obtained through personal contacts from individuals applying to the City, throughcontacts with established employment agencies, and/or by way of advertising. The Director of Administrative Services or those designated by him will conduct the initial recruiting, and screening. Suitable and eligible applicants will be referred to Department Managers or those designated by them for additional interview and employment.

Section 3 Requests for Personnel

When departments submit requests to the Administrative Services Department for persons to fill vacancies, such requests shall include the title of the position to be filled, contemplated initial salary or wages, desired training and/or experience qualifications and such other pertinent information as may be needed to enable the Administrative Services Department to most satisfactorily find the personnel being sought by the department. When circumstances permit, requests for personnel should be made areasonable period of time in advance of the actual need.

Section 4 Applicant Preference

Other qualifications being equal, departments will be expected to extend hiring preference to persons currently employed by the City of Midland.

Section 5 Residence

Other qualifications being equal, applicants who live inside the corporate limits of the City of Midland should be given preference over those living outside the City limits when appointments to positions with the City are being made.

Section 6 Announcements

All positions will be opened to applicants outside the city organization, at the department's discretion, and shall be posted for at least 5 working days. If a shorter publication period is required due to an emergency, written justification should be included with the requisition and must be approved by the City Manager.

Section 7 Application and Selection Procedures

All persons seeking initial employment or re-employment will be required to complete an application with the Administrative Services Department. Applications will be maintained by the City of Midland's Administrative Services Office, City Hall, 300 N. Loraine. Referrals will be made from the City of Midland's applicant database. Suitable and eligible candidates will be selected according to the requirements the department places on the requisition; which will include education, skills, experience and any affirmative action requirements, etc. Candidates will be required to complete typing, data entry, aptitude and/or psychological testing when necessary.

Recruiting departments shall only interview those persons who have completed a City of Midland Application Form. No formal job offers are to be made at the time of the interview. If the interviewer determines that a candidate is acceptable, the Administrative Services office will extend an offer of employment, contingent upon the successful completion of background investigations, physical examinations and/or functional capacity screening, and drug/alcohol screening.

Section 8 Appointments

As indicated above, no person shall be employed prior to completion of the application and selection process described above. The recruiting department shall notify the Administrative Services office of the preferred candidate and the date they would like to have the candidate begin employment. The department shall schedule an appointment with the Administrative Services Department for the enrollment/orientation of all new employees.

If no candidate possessing the minimum qualifications is located or approved by the recruiting department, a lesser-qualified person in a lesser classification may fill the budgeted position.

Section 9 Physical Standards

a. Medical Examination Requirements. All new and former employees will undergo a prescribed medical and/or functional capacity examination, to be made by some officially designated medical authority. The purpose of the examination will be the determination and certification of physical fitness and ability to perform duties of the position to which appointment is being considered. Such examinations are to be made as near the effective date of employment as possible.

The Administrative Services Department has the responsibility of making appointments and arrangements for obtaining the examinations, and matters concerning the initiation and completion of the requirements should be taken up with the Administrative Services Department.

b. Exceptions. Physical standards and requirements may vary somewhat in accordance with the duties and working conditions as generally set forth in the specifications for various positions and also as to anticipated length of employment.

The Administrative Services Department will advise the examining medical officer regarding any special or unusual requirements of this nature. The opinion and recommendation of the examining medical officer will govern and determine the acceptability of any person for employment, and particular attention will be given to the present or future capacity of the prospective employee to perform the required duties of the position, with or without a reasonable accommodation.

The examining medical officer will complete and forward to the Administrative Services Department a complete report on the prescribed form indicating his specific recommendations as to the suitability of the person for employment in the position indicated.

Section 10 Age Requirements

Age limits are indicated in some specifications for various classes of positions, upon the basis of a bona fide occupational qualification or statutory requirement.

Within statutory limits and restrictions, minors may be considered for employment in positions of a non-hazardous nature. In all instances, the parents of such minors shall be required to execute a waiver and release form, which will be provided by the Administrative Services Department. Any questions relative to matters of this nature, which cannot be satisfactorily solved by the Administrative Services department, will be referred to the City Attorney, whose ruling shall be final and governing.

Section 11 Standards of Conduct

To an unusual extent, and in a peculiar sense, employees of a municipal organization are the "Good Will Ambassadors" of the City, and such status involves a degree of duty and obligation regarding public and private conduct which is not common to many other classes of employment. The attitude and deportment of City employees should at all times be such as to promote the good will and favorable attitude of the public toward City Administration and its program and policies.

Section 12 Types of Positions

a. Full-Time. Full-time employees are employees who have a required workweek equaling or exceeding the full-time, established workweek.

b. Part-Time. Part-time employees are hourly paid employees working less than 30 hours each week. Part-time employees who are not temporary employees and who work at least 1,000 hours each year shall participate in the Texas Municipal Retirement System.

Part-Time employees shall not be eligible for Paid Time Off, holidays, or participation in any benefit program, including group insurance programs and other special benefit programs, unless specifically provided for in these policies, or required by State or Federal Law.

c. Temporary. Temporary employees are employees (whether full-time or part-time) who are anticipated to be working for the City for a comparatively short or definitely limited duration, not exceeding 960 working hours within a 12 month period. If a temporary employee who has had no break of time in his service and who works a full eight-hour day and a full normal work week is transferred to permanent status, he will be eligible for all the benefits of a permanent employee retroactive to the employment date of his uninterrupted service.

Section 13 Disqualification for Employment

The Director of Administrative Services may reject any application that indicates on its face that the applicant does not possess the minimum qualifications required for the position, and he may exclude or deny certification to any application for, but not limited to, the following reasons:

a. He does not possess the bona fide occupational qualifications necessary for the performance of the duties of the position to which he seeks appointment.

b. He has intentionally made false statements in his application or in the examination or has practiced or attempted to practice deception or fraud in connection with such application.

c. He is receiving pension benefits under a retirement plan of the City.

d. He refuses to participate in a retirement system, insurance program or social security program as required in these rules under Chapter X.

e. Any other grounds set forth in Chapter VIII of these rules.

Section 14 Probation Periods

a. Every employee, including part-time, seasonal, and temporary employees, shall be on probation for a period of one year (twelve months), unless the City Manager otherwise specifies a shorter period. In no case shall a probation period be less than six months.

b. When the employee first reports for work, he shall be notified of the fact that he will be on probation for the required number of months. During that time, the supervisor shall observe his work with particular care, train, and advise the employee in the performance of his duties, and let him know whether he is progressing satisfactorily. The probationary period of an employee entering duty beforethe 16th of the month shall start on the first day of the same month and that of an employee startingon or after the 16th of the month shall start on the 16th day of the same month.

c. At the close of the probation period, the Department Manager may do one of the following:
1) End the employee's probation status and process any pay increase that may be allowed under the pay plan structure (normally 5% for classified, non-public safety employees);
2) extend the probation period for a period not to exceed three months and so notify theemployee and the Administrative Services Department; or
3) dismiss the employee.

d. Probationary employees are entitled to all benefits as set out in these rules, however, probationary employees may be discharged with or without specific reason and shall not be entitled to the appeal procedure set out in these rules for any adverse action to or termination during the probation period. Probationary employees shall be entitled to a "name clearing hearing" as outlined in Chapter VIII of these rules.

e. Employees promoted or transferred within the City service shall be on probation for their first twelve months. During that time the Department Manager may cancel the promotion or transfer and assign the employee to his former or a similar position. If the former position is no longer available, nor a similar position available, the employee may be discharged under this policy.

Section 15 City of Midland Drug and Alcohol Testing Policy

a. **Introduction**

The City of Midland recognizes that drug and alcohol abuse ranks as one of the major health problems in the world and adversely affects an employee's performance and safety on the job.

Therefore, it is necessary and required by law for the City to provide a drug free working environment for its employees.

It is the City of Midland's intention to comply fully with the DOT's (Department of Transportation) regulations governing drug and alcohol use and testing, and these requirements have been incorporated into this Policy. In the event federal and state regulations are amended, this Policy and the applicable terms, conditions and/or requirements of this Policy shall be deemed to have been amended automatically at that time in order to reflect and be consistent with said regulations.

b. **Definitions and Terms Used in This Policy**

1) **Safety-sensitive function -** for the purpose of this Policy, means any of the following:
   a) Driving or operating any City- owned motor driven equipment on a full time, part time or temporary basis;
   b) Inspecting, servicing, repairing, or conditioning motor equipment; or
   c) Loading or unloading, giving or receiving shipments being loaded or unloaded.

2) **DOT driver** - means any current or prospective employee who may be required to operate a motor vehicle having a gross vehicle weight rating in excess of 26,000 pounds in interstate or intrastate commerce, or driver of a motor vehicle used to transport hazardous materials in quantity that requires the vehicle to be placarded regardless of the vehicle's size.

3) **Safety sensitive worker** - means any current and/or prospective employee who falls into the category of:
   a) Performers of safety-sensitive functions as described in Section 1 above;
   b) Operators of personal vehicles which are used for city business;
   c) Public safety personnel (Police, Fire, etc.); or
   d) Public safety communications personnel.

4) **City business** - includes, but is not limited to, work performed on or in City property including a City vehicle, and work performed on or in a non-City vehicle being used for conducting City business.

5) **Refusing to be tested - means:**
   a) Failing to provide adequate urine specimen for a drug test without a valid medical explanation;
   b) Failing to provide adequate breath for an alcohol test without a valid medical explanation;
   c) Failing to submit to a test as directed or engaging in any conduct, which clearly obstructs the testing process.

   Examples of obstructing the testing process would include leaving the scene of an accident without a valid medical or safety reason; not showing up for a test at the time directed withouta valid excuse; tampering with a urine specimen; tampering with an alcohol testing device; failing to provide required identification; failing to cooperate with federal, state or local law enforcement officers at the scene.

6) **Positive alcohol breath test -** is when the alcohol concentration level registers 0.02 or greater.

c. **Prohibited Drug and Alcohol Use and Activities**

1) The City of Midland prohibits its employees from:
   a) Using or being under the influence of or possessing illegal drugs
   b) Using or being under the influence of legal drugs that are being used illegally;
   c) Using or being under the influence of legal drugs whose use can adversely affect the ability of the driver to perform his or her job safely.
   d) Selling, buying, soliciting to buy or sell, transporting, or possessing illegal drugs while on City time or property (except for approved law enforcement activities.)

2) Employees are prohibited from:
   a) Using alcohol intoxicants within 4 hours of reporting for work;
   b) Being under the influence of alcohol at any time while at work;
   c) Possessing any amount of alcohol intoxicants on City property or in City vehicles (except for approved law enforcement activities.);
   d) Testing positive for alcohol;
   e) Refusing to be tested for drugs and alcohol as defined in Section b.5 of this Policy;
   f) Violating any applicable federal and/or state requirement governing the use of drugs or alcohol (See Chapter VIII).

d. **Required Tests**

1) **Pre-employment/Transfer Testing**
Once a job offer has been made, the applicant will be required to submit to a drug and alcohol test as part of his post-job offer physical. This is to be completed before the applicant is allowed to

report for work. This also applies to an employee who transfers from a non-covered position into a position that is covered by this policy on or after January 1, 1995.

Prior to taking a pre-employment drug and alcohol test, the applicant will be asked to execute a general consent and release form to be tested for drugs and alcohol.

All employment offers made by the City of Midland to hire an applicant, or transfer an employee are conditioned upon the applicant:

a) Completing all of the "consent to be tested" forms;
b) Taking and passing the drug and alcohol test as described by this policy;
c) Signing the authorization form for the City of Midland to obtain all of the applicant's past drug and alcohol test results, including any refusals to test, for the previous two years if required by DOT regulations.

Any applicant who refuses or fails to comply with this policy will not be considered qualified for the position for which they have applied and will also be subject to adverse action, up to and including termination.

2) **Post-accident Drug and Alcohol Testing**

Any employee who is involved in an accident while operating a City vehicle or a personal vehicle for City business must submit to a post-accident drug and alcohol test when:

a) It involves the death of a human being;
b) The employee receives a citation for a moving violation (or the employee's actions are cited in the official Peace Officer's report as a contributing factor) and either a person requires immediate medical attention away from the scene or one or more of the vehicles must be towed away from the scene because of disabling damage. The drug and alcohol test is to be conducted within 2 hours post-accident, or 8 hours in unusual circumstances.

An employee who is required to take a post-accident drug and alcohol test will be assigned to a non safety-sensitive function while awaiting the results of the tests.

An employee who refuses or fails to submit to a post-accident drug and alcohol test, who testspositive for drugs and/or alcohol, who unnecessarily delays reporting to the test site following an accident, or who fails to comply with the City's post accident testing procedures, will be subject to adverse action, up to and including termination.

3) **Reasonable Suspicion Testing**

An employee will be required to submit to a drug and alcohol test whenever the City has a reasonable suspicion to believe that an employee has used drugs and/or alcohol in violation of these policies. Reasonable suspicion shall be based on specific, objective facts and reasonable inferences drawn from those facts in light of the experience that the employee has engaged in Prohibited Conduct with regard to the use of drugs and/or alcohol, as described in Chapter VIII of the City of Midland Personnel Policies.

Reasonable suspicion exists when an employee's behavior, appearance, speech or body odor indicates drug and/or alcohol use; such must be personally observed and documented by City of Midland supervisory personnel who have received training regarding the physical, behavioral, speech, and performance indicators of probably drug and/or alcohol use.
If an employee is required to submit to a drug and alcohol test based on a reasonable suspicion regarding his/her use of drugs and/or alcohol ("Reasonable Suspicion Test"), the employee shall be informed that he/she may:

a) Submit to a Reasonable Suspicion Test;
b) Appeal the matter to another supervisor (to begin at the Division Manager level) authorized to act as an Appeals Officer; or
c) Refuse the Reasonable Suspicion Test and be subject to Adverse Action (as defined in Chapter VIII) up to and including termination.

If the employee requests an appeal, a hearing shall be conducted immediately with the supervisor requesting the Reasonable Suspicion Test, the Appeals Officer, and the employee present.

The Appeals Officer shall determine whether there is a reasonable suspicion to believe that the employee engaged in Prohibited Conduct with regard to the use of drugs and/or alcohol. The Appeals Officer shall have the authority to either:

a) Order the employee to submit to a Reasonable Suspicion Test; or
b) Order that the allegations against the employee be dismissed.

An employee who is required or ordered to submit to a Reasonable Suspicion Test shall be escorted by supervisory personnel to a testing site.

An employee who is required or ordered to submit to a Reasonable Suspicion Test is prohibited from performing safety-sensitive functions while awaiting the results of the Reasonable Suspicion Test.

An employee who receives a positive Reasonable Suspicion Test, or fails to timely submit to a Reasonable Suspicion Test, shall be subject to Adverse Action up to and including termination.

4) **Random Testing**

DOT drivers and safety sensitive workers are subject to random drug and alcohol testing.

The City of Midland will conduct drug and alcohol testing on a random, unannounced basis at the beginning, during or at the end of a regularly scheduled work shift. The testing dates and times are unannounced and are with unpredictable frequency throughout the year. The number of random testsconducted will (at a minimum) equal the amount required by federal and/or state regulations for employees who possess a commercial driver's license and perform in that capacity. Non-DOT employee random testing amounts will be at the discretion of the City Manager or designee.

The City of Midland shall maintain two separate pools for random testing, one for DOT drivers andone for safety-sensitive workers as defined in this policy. Every employee in the selected job classes or organizational divisions will have an equal chance of being selected each and every time the selection is conducted. Appropriate safeguards will be present to ensure that the identity of individuals cannot be determined prior to or at the time of their selection.

Whenever an employee is randomly selected to be tested, he or she will be instructed to report to the collection site immediately and will be given written notice of the testing procedures.

Any employee who tests positive or who refuses to submit to a test is subject to adverse action up to and including termination.

5) **Return to Duty Testing**

Should the City of Midland elect to consider reinstating or rehiring an employee who violates this policy, he or she will be required to submit to and pass a drug and alcohol test before he or she will be permitted to return to duty. For a return to duty alcohol test, the alcohol level must be less than 0.02.

Before being permitted to return to work, the employee must execute a "last chance agreement" and submit to at least six unannounced follow-up tests during the next 12 months.

Any employee who refuses to comply with the return-to-duty requirements, or who tests positive will be considered medically unqualified to perform his or her job and subject to adverse action up to and including termination.

6) **Follow up Testing**

An employee who is returned to duty after a positive drug or alcohol test is required to submit tounannounced follow-up testing as one condition of continued employment.

At a minimum, the employee will be required to submit to at least six tests during the next 12 months following the employees' return to duty. The date and time of such tests will be at the discretion of a substance abuse professional or the Division and/or Department Manager and conducted at random, without prior notice being given to the employee.

An employee who tests positive or who refuses to submit to a test, will be considered unqualified to perform his or her job and subject to adverse action up to and including termination.

e. **Testing Methodology and Integrity**

1) To insure the integrity of each test, all specimen collection, analysis, and laboratory procedures for personnel subject to 49CFR Part 40 and § 552.001, Texas Commercial Driver's License Act shall be conducted in accordance with DOT procedural protocols and safeguards. This includes, among other things:

a) Procedures to ensure the correct identity of each employee at the time of testing;
b) Strict chain of custody procedure to ensure that the specimen is not tampered with by the collection agency;
c) The use of a trained breath alcohol technician (BAT) and DOT approved testing devices for conducting alcohol tests;
d) The use of a laboratory which has been certified by the Substance Abuse and Mental Health Services Administration, a division of the U.S. Department of Health and Human Services (DHHS/SAMSHA);
e) The confirmation of an initial positive drug screen by a second analysis using gas chromatography/mass spectrometry (GCMS);
f) The confirmation of an initial positive alcohol screen by a second analysis;
g) The City's appointment of a qualified Medical Review Officer (MRO) to review positive drug test results before they are reported to the City of Midland's designated representative.

2) The City of Midland will provide employees with written and/or oral instructions regarding the conduct of the specific test before each testing event,

3) Drug Testing Procedures
a) Drug testing will require the employee to provide a specimen of his or her urine.
b) At a minimum, urine specimens will be analyzed for the presence of the following drugs: marijuana, cocaine, opiates, amphetamines, and/or phencyclidine (PCP).
c) Personnel not subject to 49 CFR Part 40 and § 522.001, Texas Commercial Driver's License Act, may be subject to the pre-employment drug test via the rapid drug test method conducted by a trained technician. Positive test results will be confirmed with City's Department of Health and Human Services approved testing facility. All other drug tests will be administered using the split sample methodology required by DOT. Under this methodology, the employee must provide at least 45 ml (milliliters) in a specimen container. The specimen will then be divided, into two specimens. The bottle containing 30 ml will be analyzed as the employee's primary

specimen. The second bottle will be held by the laboratory, to be sent to another lab at the employees' request in the event that the primary specimen is verified as positive. In the event the primary specimen is verified as positive, the employee will be notified by the City's MRO or by the City's designated representative of the positive test and given the option to have the second bottle sent to a different laboratory for analysis. To exercise this option, the employee must advise the city's MRO or designated representative within 72 hours of being informed of the primary positive result. The employee will be responsible for the cost of having the second sample analyzed.

d) Except for the use of methadone and medications containing alcohol, nothing in this Policy prohibits the employee's use of a medication legally prescribed by a licensed physician who is familiar with the employee's medical history and specific job duties and who has advised the employee that the prescribed medications will not adversely affect the employee's ability to perform his job safely. Medications prescribed for someone other than the employee, however will not be considered lawfully used when taken by the employee under any circumstances.

e) A "positive" drug test may be declared "negative" by the MRO, if the employee can prove with clear and convincing evidence that the drug which was used was prescribed by a licensed physician who is familiar with the employee's medical history and specific job duties. The determination of this will be made by the MRO.

f) In the event that the test result of an employee's primary specimen is positive, the employee will be notified by the MRO. If the MRO is unable to reach the employee after making reasonable efforts, then the employee may be notified by the City's designated representative. The MRO or the City's designated representative shall advise the employee that he or she has 72 hours to request that the MRO send the secondary specimen to a second NIDA approved laboratory for analysis. The employee will be responsible for the cost of the second test.

g) Before an employee's test result will be confirmed positive for drugs, the employee will be given the opportunity to speak with the City's MRO and demonstrate that there was a legitimate medical explanation for the positive test result. If the MRO determines that a legitimate medical reason does exist, the test result will be reported to the City as a "negative," If the MRO determines that a legitimate medical reason does not exist, the test result will be reported to the City as a "confirmed positive."

4) Alcohol Testing Procedures

a) Alcohol testing under this Policy requires that an employee must provide a breath specimen for any test conducted by, or for the City of Midland.

b) In addition to this policy, an employee could be subject to alcohol testing conducted by a federal, state or local law enforcement officer following an accident. The employee must provide either a breath or blood specimen, as directed by the law enforcement officer.

c) Alcohol tests will be administered using a breath specimen, taken by a breath alcohol technician (BAT) using an approved breath-testing device (EBT).

d) Before being tested by the City, each employee will be positively identified through presentation of a photo-identification or by other means approved by the City of Midland and will be required to execute a "Breath Alcohol Test" form provided by the BAT. An employee who refuses to provide proper identification, provides false identification, refuses to execute the forms, or who otherwise refuses or fails to cooperate will be treated as though he or she had tested positive and will be subject to adverse action, up to and including termination.

e) Prior to each alcohol breath test, the BAT will instruct the employee on how the test will be performed.

f) To protect each employee, the BAT will open and attach to the testing devise an individually sealed mouthpiece in the employee's view. The employee will then be directed to blow forcefully into the breath-testing device until an adequate amount of breath has been maintained.

g) In the event that the employee is unable to provide an adequate amount of breath for the initial or confirmatory test after several attempts to do so, the employee will be required to submit to an evaluation by a licensed medical physician to determine whether a valid medical condition does exist. If the physician determines that a valid medical condition does exist, the test result

will be considered as "negative". If the physician determines that a valid medical condition does not exist, the test result will be considered a "confirmed positive".

h) In the event that an employee provides an adequate breath specimen and the initial test registers an alcohol concentration level that is less than .02, the test results will be reported, as "negative" and no additional testing will be required at that time.

i) In the event that an employee provides an adequate breath specimen and the initial test registers an alcohol concentration of .02 or greater, a second confirmatory will be performed. If the confirmatory breath test registers less than .02, the test results will be reported as a "negative." The confirmation breath test will be administered no sooner than 15 minutes from the initial breath test and no longer than 20 minutes from the initial breath test. During the wait period for the confirmation test, the employee is not allowed to put anything into his mouth and should be discouraged from belching or burping.

f. Test Results - Adverse Action

1) An employee who violates these prohibitions will be subject to restrictions mandated by the DOT as described in part d, item 6 of this Section and subject to adverse action as described in ChapterVIII of the City of Midland's Personnel Policies Manual, up to and including termination.

2) Any employee whose test result is confirmed positive for drugs will be considered unqualified to perform or continue to perform his or her functions safely and subject to adverse action up to and including termination. The employee could also be subject to civil and criminal penalties imposed by DOT.

3) An employee whose confirmatory test registers .02 or more but less than .04 will be removed from service and placed on leave for a minimum of 24 hours. The employee will be subject to return to dutytesting and follow up testing and may be subject to adverse action up to and including termination.

   An employee whose confirmatory test registers .04 or greater will be removed from service andplaced on leave for a minimum of 24 hours and referred to a Substance Abuse Professional (SAP). The employee may be subject to adverse action up to and including termination.

   Before consideration can be given to returning an employee to duty who has had a BAC (breath alcohol concentration) of .04 or greater, the employee must complete the rehabilitation program as prescribed by the SAP and be subject to return to duty and follow up testing.

g. Confidentiality

The results of all individual drug and alcohol tests will be kept in a secure location with controlled access.

All individual test results will be considered confidential. The release of an individual employee's results will only be given with an individual employee's written authorization, or as is otherwise required by DOT regulations, or by other applicable federal or state law.

Section 16 Harassment Policy and Procedures

a. Prohibited Conduct

The City of Midland prohibits harassment based on race, color, religion, sex, age, national origin, disability or any other basis protected by federal, state or local law. It is the policy of the City of Midland that all employees shall be able to enjoy a work environment free from all forms of discrimination and harassment, including sexual harassment. In general, harassment may be defined as unsolicited words or conduct which tend to annoy, alarm or abuse another person, or a course of vexatious comment or conduct that is known or ought reasonable to be known to be unwelcome. Additionally, sexual harassment is a form of misconduct that undermines the integrity of the

employment relationship. No employee, either male or female, should be subjected to unsolicited andunwelcome sexual overtures or conduct, either verbal or physical. Such actions will not be tolerated.

Each employee has the responsibility to maintain the workplace free of all types of harassment. In keeping with such, the City of Midland has the responsibility of providing this policy to all employees and assuring them that they are not to endure insulting, degrading, or exploitative sexual treatment.

Specifically, no person shall threaten or insinuate, either explicitly or implicitly, that an employee's refusal to submit to sexual advances will adversely affect the employee's employment, evaluation, wages, advancement, assigned duties, shifts, or any other condition of employment or career development. In addition, while on duty or while acting in an official capacity, no employee shall knowingly or intentionally engage in conduct which has the purpose or effect of substantially interfering with an individuals' work performance or creating an intimidated, hostile, or offensive work environment; or conduct which subjects a member of the public to sexual harassment.

b. **Examples of Prohibited Activity**

Examples of unlawful harassment based on race, color, religion, sex, age, national origin, disability, or other protected basis includes, but is not limited to the following:

1) Verbal actions such as slurs, derogatory comments or jokes, epithets or unwanted sexual invitations, advances, or comments;
2) Physical actions such as unwanted touching, assault, blocking another's way, or interference with work;
3) Visual conduct such as sexually-oriented, pornographic and/or derogatory photographs, posters, drawings, cartoons, gestures, e-mail, or Internet sites;
4) Threats or demands to submit to sexual advances or requests as a condition of continued employment, offers of employment benefits in return for sexual favors, or to avoid some other negative employment action; and
5) Retaliation against any employee for making an allegation of harassment or for participating in such an investigation.

Sexual harassment is defined as unwelcome sexual advances, requests for sexual favors, and other verbal or physical conduct of a sexual nature that affects an employee in any one of the following ways:

1) Submission to such conduct is made explicitly or implicitly a term or condition of a person's employment;
2) Submission to or rejection of such conduct by an individual is used as a basis for employment decisions affecting that individual; or
3) Such conduct has the purpose or effect of unreasonably interfering with an individual's work performance or creating an intimidating, hostile, or offensive work environment.

c. **Procedures**

Any employee who believes that he or she has been subjected to general harassment as defined above should avail themselves of the grievance procedures outlined in Chapter IX of these policies. Any employee (or member of the public) who believes that he or she is or has been subject to sexual harassment by a City employee should report the alleged charge immediately, in accordance with the following procedures. (All information will be held in strictest confidence and will be disclosed only ona need to know basis to investigate and resolve the matter).

1) The individual alleging harassment may report the incident to their immediate supervisor, their Department Manager, the City Manager's Office or the Administrative Services Department. If an employee's immediate supervisor is involved in the alleged harassment, it is unnecessary to make a report to that individual. If accusations are made to any other person or if supervisory

personnel otherwise become aware of suspected acts of harassment, the matter should be directed immediatelyto the Administrative Services Department. The supervisor or administrator contacted will offer the individual alleging harassment the opportunity to complete a written statement specifically outlining the complaint. If the complainant does not put the complaint in writing, the person contacted still must notify the Administrative Services Department. Employees are encouraged to promptly report the alleged harassment within three (3) calendar days of the offense. The City of Midland takes all complaints seriously and handles them as promptly, thoroughly, and confidently as possible.

2) Once a written complaint is filed, the Administrative Services Department will conduct an investigation within 48 hours of their receipt of the complaint (excluding weekends and holidays).

3) If corrective action (other than adverse action as outlined in Chapter VIII of these policies) is deemed appropriate as a result of the investigation, the City Manager's Office may authorize the Administrative Services Department or the Department Manager to enforce said action as needed. Any adverse action recommended as a result of the investigation will be subject to approval by the Department Manager and will be subject to the appeals procedure outlined in Chapter VIII of these policies. If allegations prove not to constitute harassment, or the evidence provided does not substantiate the claim, the accused employee will not be subject to any adverse action. Employees who register complaints in good faith will not be subject to any retaliation. Employees who willfully register false accusations will face adverse action, up to and including termination.

Section 17 Workplace Violence Policy

The City of Midland is committed to maintaining a safe work environment, and has a zero tolerance policyfor violence in the workplace. “Workplace violence” is defined to include:

a. Physically aggressive, violent, or threatening behavior, such as attempts to instill fear in others or intimidation;
b. Verbal or physical threats of any sort;
c. Any other conduct that suggests a tendency toward violent behavior. Such behavior includesbut is not limited to, excessive arguing, profanity, threats of sabotage of City property, belligerent speech or demonstrated pattern of insubordination, and refusal to follow City policies and procedures;
d. Causing physical damage to City facilities or defacing property; or
e. With the exception of authorized City personnel as described in Chapter II, carrying firearms or weapons of any type or kind while conducting City business in or on City buildings and property, other assigned work locations, and City vehicles and equipment.

If any employee becomes aware of or observes any of the above-referenced behavior or actions by a co-worker, consultant, customer, third party vendor, visitor, or any other party, he or she should notify his/her supervisor, any member of management, and/or the Administrative Services Department immediately.

All reports of workplace violence will be taken seriously. To the extent possible, the identity of the reporting individual(s) will be kept confidential. The City will not tolerate retaliation in any form against anemployee who makes a report of workplace violence.

Any employee found to be in violation of this policy will be subject to adverse action up to and including termination.

Chapter V

Attendance and Leaves

Section 1 Hours of Work

All offices of the City, except those for which special regulations are required, shall be kept open continuously from 8:00 a.m., until 12:00 p.m. (noon) and from 1:00 p.m. until 5:00 p.m., Monday through Friday.

Section 2 Regular Working Day

For the purpose of these policies and all the following sections which deal with attendance and leave, a "regular working day" or an "accrued day" of leave shall be 8 hours for all full-time employees; provided, however, that for the Fire Department's 56-hour shift personnel ("Fire Department Shift Personnel"), a "regular working day" or "accrued day" shall be 12 hours. No employee may receive additional compensation by working during his or her leave without the express approval of the City Manager. Temporary employees will earn no Paid Time Off or other leaves except as otherwise expressly stated in these policies.

Section 3 Work Week

The work week will be determined by the needs of the City and set by the City Manager with due regard for certain State statutes.

Section 4 Overtime

Employees may be required to work overtime when necessary, in order to maintain the proper City services. All employees required to work overtime shall be compensated at rates set by the City Manager and pursuant to law. Many employee classifications are eligible for compensatory time off rather than paid overtime. No more than forty (40) hours of compensatory time may be accumulated.

Section 5 Attendance

An employee shall be in attendance at his or her worksite in accordance with the rules regarding hours of work, holidays, and leaves as determined by the employee's department. Excessive tardiness, neglect of duties, or unauthorized absences will be grounds for dismissal. All departments shall keep daily attendance records of employees. Any employee absent from work without notice for three (3) consecutive days will be considered as having abandoned the job. Such abandonment shall be considered a voluntary resignation from employment, and the City will process such separation of employment as a voluntary resignation.

Section 6 Inclement Weather / Emergency Closure

The City of Midland offices and activities will remain open and in operation, during established working hours unless the City Manager declares the offices, excluding emergency services, officially closed due to inclement weather or emergency closure due to unusual circumstances.

a. **Non-Sworn Employees.** For purposes of this Section, "non-sworn employees" are all City employees except peace officers and fire protection personnel.

b. **Reporting to Work.** If the City has not been officially closed, employees shall make a reasonable effort to report to work. An employee who is unable to report to work due to inclement weather shall notify the employee's supervisor in accordance with these policies and applicable departmental rules

and procedures. An employee who fails to so notify the employee's supervisor may be subject to adverse action, up to and including dismissal.

c. Compensation for Inclement Weather / Emergency Closing Absences.

Compensation for absences will be as follows:

1) **Official Closing.** If the City Manager closes a facility, a non-exempt non-sworn employee designated by the employee's Department Manager may work remotely to ensure department operations continue during the closure period. An employee who works remotely shall be paid for hours worked in addition to receiving the "City Closed" accrual for their scheduled shift. Hours worked remotely count as hours worked in determining overtime in accordance with the Fair Labor Standards Act. An employee who does not work remotely shall be paid for the employee's scheduled shift. Such "City Closed" hours shall not count as hours worked for the purpose of overtime. If an employee is on Paid Time Off or any other leave during the declared times of closing, the appropriate leave compensation will apply.

2) **No Official Closing.** If the City Manager does not close a facility and an employee is unable to report to work due to inclement weather, compensation will be handled in the following manner:

    a) **Non-exempt Employees.** A non-exempt employee who misses work hours due to inclement weather may use accrued vacation time or compensatory leave. If an employee has no paid leave available, the employee may be granted authorized leave without pay.

    b) **Exempt Employees.** An exempt employee who misses work hours due to inclement weather or other emergencies may use accrued vacation time if the absence is for a full workday.

3) **Delay Start / Early Closing.** If the City Manager delays the opening of a facility or closes a facility early due to inclement weather, an employee who reported for work will be paid "City Closed" for the remainder of the employee's normal shift. Employees who remain as part of a skeleton crew will be compensated for all hours worked in addition to receiving the "City Closed" accrual for hours the City was closed due to the delayed opening or early closure.

4) **Critical Service Personnel.** Employees designated by their Department Manager to provide critical services shall report to work on-site as provided by their department rules during an official closing. Non-exempt non-sworn employees who are required to report to work hereunder shall be paid for all hours worked in addition to receiving the "City Closed" accrual for their scheduled shift. Such personnel may include, but are not limited to, from the following:
    a) Airport Operations Personnel;
    b) Utilities Personnel;
    c) Transportation Personnel;
    d) Traffic Operations Personnel; and
    e) Solid Waste Personnel.

Section 7 Holidays

Municipal offices with the exception of those in emergency categories, shall be closed on the following legal holidays: New Year's Day, Martin Luther King Day, Presidents Day, Good Friday, Memorial Day, Juneteenth National Independence Day, Independence Day, Labor Day, Veterans Day, Thanksgiving Day, Friday after Thanksgiving, Christmas Eve Day, and Christmas Day. Firefighters shall be granted one (1) floating holiday designated as the "September 11th Floating Holiday." Non-exempt employees' holiday time will be

considered actual hours worked to determine eligibility for overtime.

Holidays falling on Sunday or Saturday. If a holiday falls on Sunday, the following Monday shall be observed, and if a holiday falls on Saturday, the preceding Friday shall be observed. The City Manager may designate any additional holidays which he feels may be justified in particular situations after giving due regard to the need for City services.

Eligibility for Pay for Holidays. An employee shall be eligible for holiday pay provided that the employee worked the last scheduled working day before and the next scheduled working day following the holiday or is otherwise on approved leave (either paid or unpaid) for those same days. In approving leave around a holiday, directors and division managers must ensure that adequate personnel are on duty to conduct departmental business.

Section 8 Vacation / Sick Leaves

a. Vacation
Effective October 1, 2023, vacation leave accruals shall be discontinued. The final accrual of vacation leave will be through the pay period ending September 30, 2023 (pay date of October 13, 2023). All vacation leave balances shall be converted to Paid Time Off on a one-to-one basis.

b. Sick Leave
Effective October 1, 2023, sick leave accruals will be discontinued. The final accrual of sick leave will be through the pay period ending September 30, 2023 (pay date of October 13, 2023). All sick leave balances shall be converted to Paid Time Off on a one-to-one basis.

c. Council Appointees, Other Employees, and Department Managers
Vacation and sick leave provided in any Council Appointee's, Other Employee's, or Department Manager's employment agreement shall be replaced with Paid Time Off.

Section 9 Paid Time Off ("PTO")

Effective October 1, 2023, the City will convert its Vacation and Sick Leave programs into a single Paid Time Off ("PTO") program. PTO is a comprehensive paid time off program that can be used for any type of time off from work that previously would have been covered under the Vacation and Sick Leave policies but does not include time taken under any other City's paid time off policies. In accordance with Texas Local Government Code 142.0013, PTO is equivalent to vacation time for fire protection and peace officer personnel.

Employees may not receive additional compensation by working during their PTO leave without the express approval of the City Manager. Temporary employees are not eligible for PTO.

a. PTO Accrual
All full-time employees are eligible to accrue PTO effective October 1, 2023 (Pay Date October 27, 2023) at the accrual rates listed below:

Full-Time Employees (based on a 40-hour work week)				
Years of Service	**Accrue Annual (Days)**	**Accrue/Paycheck 26 pays (Hours)**	**Maximum Days**	**Maximum Hours**
Upon hire	5			
Less than 1 year	20	6.1539		
At least 1 but less than 4 years	27	8.3077	118	944
At least 4 but less than 9 years	29	8.9231	128	1024
At least 9 but less than 15 years	31	9.5385	133	1064

At least 15 years, but not hired prior to June 1, 1990	33	10.1539	139	1112
Hired prior to June 1, 1990	44	13.5385	145	1160
Fire Department Shift Personnel (based on a 56-hour workweek)				
Years of Service	**Accrue Annual (Days)**	**Accrue/Paycheck 26 pays (Hours)**	**Maximum Days**	**Maximum Hours**
Upon hire	5			
Less than 1 year	20	9.2308		
At least 1 but less than 4 years	27	12.4616	118	1416
At least 4 but less than 9 years	29	13.3847	128	1536
At least 9 but less than 15 years	31	14.3077	133	1596
At least 15 years, but not hired prior to June 1, 1990	33	15.2308	139	1668
Hired prior to June 1, 1990	44	20.3077	145	1740

b. Requesting PTO

PTO may be used for various reasons, including personal days, vacations, and illness or injury (non-work related). PTO will be paid at the employee's regular rate of pay earned at the time the PTO is used. PTO does not count as hours worked for the purpose of overtime under the Fair Labor Standards Act (FLSA).

An employee shall schedule PTO in advance with the employee's supervisor or Department Manager for approval unless the employee uses it for an unexpected illness or injury. In the event of an unexpected illness or injury, the employee shall notify the employee's immediate supervisor prior to the time set for the employee to begin the employee's shift. If an employee takes PTO without prior approval for medical or emergency reasons, the City reserves the right to require medical documentation or other documentation of the reasons given for the unapproved PTO. If the employee is unable to contact the employee's supervisor, the employee may notify the Office of Administrative Services. In general, employees should seek approval for planned absences at least five (5) days in advance. Employees may not use more than ten (10) days of PTO days at one time without approval from the employee's Department Manager. Depending on staffing and departmental needs, PTO requests will be granted to the extent feasible.

c. Payment of PTO for Terminating Employees

A regular employee, Department Manager, Other Employee, or Council Appointee (unless the employee's employment agreement states otherwise) who terminates employment with the City, or whose employment is terminated by the City, shall be paid in a lump sum for unused PTO as listed below:

Years of Service	Payout % of Accrual
Upon hire	0.00%
Less than 1 year	0.00%
At least 1 but less than 4 years	70.00%
At least 4 but less than 9 years	73.00%
At least 9 but less than 15 years	76.00%
At least 15 years, but not hired prior to June 1, 1990	79.00%
Hired prior to June 1, 1990	82.00%

d. Payment of PTO for Retiring Employees

Retiring employees may request a maximum of 250 hours of the PTO payment listed in Subsection c above to be deposited into a Retiree Medical Reimbursement Account, which may be used to reimburse out-of-pocket medical expenses on a tax-free basis as authorized by the United States Internal Revenue Code. This provision shall not apply to any employee who is not eligible to retire at the time of separation of employment or whose employment is terminated under the provisions of Chapter VIII, "Adverse Action," or Chapter XII, "Employment At Will" of the City of Midland Personnel Policies.

For the avoidance of doubt, this Subsection applies only to the following employees:

i. An active employee who has completed a minimum of twenty (20) consecutive years of service prior to retirement;
ii. An active employee who is at least sixty (60) years of age and has completed a minimum of five (5) consecutive years of service with the City prior to retirement; or
iii. An active employee who is eligible for retirement through the Texas Municipal Retirement System or through the Midland Fireman's Relief and Retirement Fund.

Section 10 PTO Bank for Sick Leave

Beginning October 1, 2023, a Paid Time Off Bank ("PTO Bank") for sick leave shall be established and maintained by the City.

a. **Membership**

Membership in the PTO Bank shall be voluntary on the part of employees.

b. **Eligibility**

Any non-probationary, full-time employee with one full year of continuous service with the City of Midland is eligible to join.

c. **Enrollment**

Any eligible employee, within thirty (30) days following the completion of his or her first year of employment, may enroll in the PTO Bank by completing a membership application and donating two (2) days of the employee's accumulated PTO leave to the PTO Bank. In addition, any eligible employee may enroll during the open enrollment period. Open enrollment shall occur annually during the month of September, with the PTO donation being deducted from the 2nd paycheck of October. For the purposes of this policy, a PTO Bank Day is defined as 8 hours for regular employees and 12 hours for Fire Department Shift Personnel.

Any employee who was previously enrolled in the City's Sick Leave Bank shall be enrolled in the PTO Bank with no further donation or other action on the employee's part being necessary.

d. **Procedures**

1) The Administrative Services Department shall govern the operations of the PTO Bank.

2) A new employee must enroll within thirty (30) calendar days following the first-anniversary of his or her date of employment. Otherwise, participant enrollment will be held annually during the open enrollment period during the month of September.

3) An employee shall exhaust all of the employee's accrued PTO before the employee may utilize the PTO Bank.

4) An employee must be suffering from a serious health condition that makes the employee unable to perform the functions of the employee's job. A serious health condition is an illness, injury, impairment, or physical or mental condition that involves either inpatient care or continuing

treatment by a health care provider, including but not limited to a stroke, a heart attack, cancer, or injuries sustained in an automobile accident.

5) A physician's statement diagnosing the condition in detail and indicating the duration of treatment is required with the Request for PTO Bank Days.

6) Employees covered under a workers' compensation program may not utilize the PTO Bank for those conditions covered under workers' compensation.

7) Additional accrual donations may be required in the event the current PTO Bank balance falls below an acceptable level.

8) The total lifetime benefit under the PTO Bank program shall not exceed ninety (90) working days per individual.

e. **Application Process**

1) Should a member of the PTO Bank incur a long-term, serious illness or injury necessitating additional days after all of the member's accumulated PTO leave days have been used, the member may submit a Request for PTO Bank Days.

2) A member who requests days from the PTO Bank shall submit to the Office of Administrative Services Employee Benefits Division the following information within thirty (30) calendar days of the date that they have exhausted their accrued PTO leave days:

(i) A completed Request for PTO Bank Days form, which is available in the Employee Benefits Office; or
(ii) A detailed statement from a physician verifying the illness or injury.

3) Forms for the above purpose have been prepared and are available from the Employee Benefits Office.

4) The Employee Benefits Division will not consider a request for days from the PTO that does not conform to the requirements of this subsection.

5) If a member is unable to file a Request for PTO Bank Days, the immediate supervisor or Department Manager may initiate the request at the request of the member's family.

6) An applicant may be required to undergo a medical review by a second-opinion physician of the City's choice at any time at the expense of the City.

f. **Regulations**

1) Additional accrual donations may be assessed in the event the current PTO Bank balances falls below an acceptable level.
2) The Employee Benefits Division will review and act on all requests within thirty (30) working days of receipt of a Request for PTO Bank Days and necessary documents.
3) If a member is not satisfied with the Employee Benefits Division's decision regarding a Request for PTO Bank Days, the member may request a conference with the City Manager or the City Manager's designee by filing a written Request for Review with the Administrative Services Director within ten (10) business days of the member's receipt of the Employee Benefits Division's decision. The written Request for Review shall set forth contain all the relevant facts as well as the specific grounds for the review of the decision.
   (i) Upon receipt of a Request for Review, the City Manager or the City Manager's designee shall:
      1. schedule a conference to discuss the request; or

2. take action that addresses the matter described in the Request for Review to the reasonable satisfaction of the member.

(ii) Following a conference to discuss the request, the City Manager or the City Manager's designee shall provide the member a written decision regarding the request within ten (10) business days.

(iii) The decision or action taken by the City Manager or the City Manager's designee shall be the final decision of the City regarding the Request for Review.

Section 11 PTO Buy-Back

An eligible employee may elect to participate in the Paid Time Off Buy-Back ("PTO Buy-Back") program under which the City may buy back a portion of the employee's unused PTO leave as described in this Section.

a. For purposes of this Section, an eligible employee is a full-time employee who has completed at least one (1) year of continuous service before the beginning of the fiscal year (October 1st) during which the employee elects to participate in the PTO Buy-Back Program.

b. An eligible employee who elects to participate in the PTO Buy-Back program shall be subject to the following limits:

1) If the employee is not an employee of the Fire Department, the employee may elect for the City to buy back 40 hours of unused PTO leave per buy-back, with a maximum of two (2) buy-backs (80 hours) per fiscal year.

2) If the employee is an employee of the Fire Department who is not Fire Department Shift Personnel, the employee may elect for the City to buy back 20 hours of unused PTO leave per buy-back, with a maximum of four (4) buy-backs (80 hours) per fiscal year.

3) If the employee is Fire Department Shift Personnel, the employee may elect for the City to buy back 28 hours of unused PTO leave per buy-back, with a maximum of four (4) buy-backs (112) hours) per fiscal year.

4) The employee must have a minimum of three (3) days of PTO leave remaining after a buy-back. There will be no incremental buy-back.

c. An employee who elects to participate in the PTO Buy-Back program must complete and return the PTO Buy-Back form to the Administrative Services Department no less than 30 days prior to the scheduled buy-back.

d. An employee who elected to participate in the PTO Buy-Back and whose employment was terminated prior to receiving the PTO Buy-Back payment shall be subject to Section 9.c above and shall not receive the PTO Buy-Back payment.

e. A PTO Buy-Back payment will be an additional amount added to the employee's regular paycheck scheduled for the date(s) selected. Upon a PTO Buy-Back payment being made, the number of hours that were bought back will be deducted from the employee's accrued PTO leave. PTO buy-back is subject to deductions for retirement plan contributions under the Federal Insurance Contributions Act and all other applicable deductions.

f. The PTO Buy-Back program shall be subject to the availability of funds.

Section 12 Birthday Leave

Full time employees are eligible for one (1) day of paid birthday leave annually. Birthday leave shall be taken during the employee's birthday month unless the employee's Department Manager makes an exception. Exceptions may be made only after the employee's birthday and prior to December 31st.

An employee must request birthday leave from the employee's supervisor or Department Manager at least one (1) week prior to taking birthday leave.

An employee's unused birthday leave will not carry over to the next year, and an employee will not receive payment for unused birthday leave upon separation of employment.

Section 13 Bereavement Leave

All employees may be granted bereavement leave with pay for a period not to exceed three (3) days unless a longer period of time (not to exceed an additional two (2) days) is approved by the City Manager in case of death of a grandparent, grandchild or other member of their immediate family, which shall consist of the father, mother, son or daughter, husband, wife, brother or sister of the employee's spouse or the employee. Leave up to ½ day may be granted to an employee by his immediate supervisor to attend funerals for other than immediate family members. This leave shall not be charged against PTO or other accrued leave.

Part-time, seasonal, and temporary employees may be granted leave of absence without pay in such cases.

Section 14 Family/Medical Leave Act (FMLA)

The City of Midland complies with the Family and Medical Leave Act (FMLA) and will grant up to 12 weeks of leave during a 12-month period to eligible employees or up to 26 weeks of military caregiver leave.

The purpose of this policy is to provide employees with a general description of their FMLA rights. In the event of any conflict between this policy and the applicable law, employees will be afforded all rights required by law. If you have any questions, concerns, or disputes with this policy, please contact the manager of employee benefits.

a. **Definitions**

As used in this Section:

1) **Covered active duty** means (1) with respect to a member of a regular component of the Armed Forces, duty during deployment of the member with the Armed Forces to a foreign country, or (2) with respect to a member of the Reserve components of the Armed Forces, duty during the deployment of the member with the Armed Forces to a foreign country under a federal call or order to active duty in support of a contingency operation in accordance with 29 CFR 825.102.
2) **Covered service member** is a current member of the Armed Forces, including a member of the National Guard or Reserves, who is receiving medical treatment, recuperation, or therapy or is in outpatient status or on the temporary disability retired list for a serious injury or illness.
3) **Next of kin of a covered service member** is the nearest blood relative, other than the covered service member's spouse, parent, or child, in the following order of priority: blood relatives who have been granted legal custody of the covered service member by court decree or statutory provisions, brothers and sisters, grandparents, aunts and uncles, and first cousins, unless the covered service member has specifically designated in writing another blood relative as his or her nearest blood relative for purposes of military caregiver leave under the FMLA.
4) **Parent** means a biological, adoptive, step or foster father or mother, or any other individual who stood in loco parentis to the employee when the employee was a child. This term does not include parents "in law."
5) **Qualifying exigency** includes short-notice deployment, military events and activities, childcare, and school activities, financial and legal arrangements, counseling, rest and recuperation, post-deployment activities, and additional activities that arise out of active duty, provided that the employer and employee agree, including the agreement on timing and duration of the leave.
6) **Serious health condition** means an illness, injury, impairment, or physical or mental condition that involves inpatient care or continuing treatment by a health care provider. This can include conditions with short-term, chronic, long-term or permanent periods of incapacity.
7) **Serious injury or illness** is one that is incurred by a current member of the Armed Forces in the line of duty on active duty that may cause the member to be medically unfit to perform the duties of his or her office, grade, rank, or rating. A serious injury or illness also includes injuries

or illnesses that existed before the member's active duty and that were aggravated by service in the line of duty on active duty.

8) **Spouse** means (1) a husband or wife as defined or recognized in the state where the individual was married or (2) a husband or wife in a marriage that was validly entered into outside of the United States if the marriage could have been entered into in at least one state.

b. **Eligibility**

To be eligible for leave under this policy, employees must meet **all** of the following requirements:

1) Have worked at least twelve (12) months for the City of Midland.
2) Have worked at least 1,250 hours for the City of Midland over the twelve (12) months preceding the date when the leave would commence.

The 12 months of employment do not have to be consecutive. All periods of absence from work due to or necessitated by service in the Armed Forces are counted as hours worked in determining eligibility.

c. **Reasons for Leave**

To qualify as FMLA leave under this policy, the leave must be for one of the following reasons:

1) The birth of a child or placement of a child with the employee for adoption or foster care.
2) To care for a spouse, child or parent who has a serious health condition.
3) For a serious health condition that makes the employee unable to perform the essential functions of his or her job.
4) For any qualifying exigency arising out of the fact that a spouse, child or parent is a member of the Armed Forces on covered active duty or on call to covered active duty status.
5) To care for a covered service member with a serious injury or illness.

d. **Amount of Leave**

An eligible employee may take up to 12 weeks of FMLA leave during any 12-month period. The City will measure the 12-month period as a rolling 12-month period measured backward from the date an employee uses any leave under this policy. Each time an employee takes leave, the City will compute the amount of leave the employee has taken under this policy in the last 12 months and subtract it from the 12 weeks of available FMLA leave, and the balance remaining is the amount the employee is entitled to take at that time.

An eligible employee may take up to 26 weeks of FMLA military caregiver leave during a single 12-month period. The City will measure the 12-month period as a rolling 12-month period measured forward. FMLA leave already taken for other FMLA circumstances will be deducted from the total of 26 weeks available.

Eligible spouses who both work for the City may only take a combined total of 12 weeks of FMLA leave for the birth of a child, adoption or placement of a child in foster care, or to care for a parent (but not a parent "in-law") with a serious health condition. Both may only take a combined total of 26 weeks of leave to care for a covered service member (if each spouse is a parent, spouse, child or next of kin of the covered service member).

e. **Intermittent Leave or a Reduced Work Schedule**

Employees may take FMLA leave in one consecutive block of time, may take FMLA leave intermittently (e.g., take a day periodically when needed over the year) or, under certain circumstances, may take FMLA leave to reduce the workweek or workday, resulting in a reduced hour schedule. In all cases, the leave may not exceed a total of 12 workweeks (or 26 workweeks to care for a covered service member) in a 12-month period.

The City may temporarily transfer an employee to an available alternative position with equivalent pay and benefits if the alternative position would better accommodate the intermittent or reduced schedule in instances when leave for the employee or employee's family member is foreseeable

and for planned medical treatment, including recovery from a serious health condition or to care for a child after birth or placement for adoption or foster care.

For the birth, adoption, or foster care of a child, the City and the employee shall mutually agree to the schedule before the employee may take the leave intermittently or work a reduced-hour schedule. Leave for birth, adoption, or foster care of a child must be taken within one year of the birth or placement of the child.

When leave is needed for planned medical treatment, the employee shall make a reasonable effort to schedule treatment so as not to unduly disrupt the City's operations.

f. **Employee Notice Requirement**
An employee who takes FMLA leave must provide verbal or written notice of the need for FMLA leave to the employee's Department Manager or the manager of employee benefits.

When the need for FMLA leave is foreseeable, the employee shall provide the City with at least 30 days' notice. When an employee becomes aware of a need for FMLA leave fewer than 30 days in advance, the employee shall provide notice of the need for the leave either the same day the need for leave is discovered or the next business day. When the need for FMLA leave is not foreseeable, the employee shall comply with the City's usual and customary notice and procedural requirements for requesting leave, absent unusual circumstances.

Within five business days after an employee has provided this notice, the manager of employee benefits, or the manager's designee, will complete and provide the employee with a Notice of Eligibility and Rights and request a medical certification or other supporting documentation as necessary.

g. **Designation of FMLA Leave**
Within five business days after an employee has submitted the required medical certification or other documentation, the manager of employee benefits, or the manager's designee, will complete and provide the employee with a written response to the employee's request for FMLA leave using the FMLA Designation Notice.

h. **Employee Status and Benefits During Leave**
The City will continue an employee's health benefits during the FMLA leave period at the same level and under the same conditions as if the employee was continuously at work.

While on paid leave, the City will continue to make payroll deductions to collect the employee's share of insurance premiums. While on unpaid leave, the employee shall continue to make this payment, either in person, by mail, or by prearranged payment agreement. The payment must be received by the 15th day of each month. If the payment is more than 30 days late, the employee's healthcare coverage may be dropped for the duration of the leave.

The City will provide 15 days' notification prior to the employee's loss of coverage.

If the employee chooses not to return to work for reasons other than a continued serious health condition of the employee or the employee's family member or a circumstance beyond the employee's control, the City will require the employee to reimburse the City the amount it paid for the employee's health insurance premium during the FMLA leave period.

If the employee contributes to a life insurance or disability plan, the City will continue making payroll deductions while the employee is on paid leave. While the employee is on unpaid leave, the employee may request the continuation of such benefits and pay his or her portion of the premiums, or the City may elect to maintain such benefits during the leave and pay the employee's share of the premium payments. If the employee does not continue these payments and the City does not elect to maintain such coverage, the City will discontinue coverage during the leave. If

the City maintains coverage, the City may recover the costs incurred for paying the employee's share of any premiums, whether or not the employee returns to work.

i. **Employee Status After Leave**
An employee who takes leave under this policy may be asked to provide a fitness for duty clearance from a health care provider. This requirement will be included in the City's response to the FMLA request. Generally, an employee who takes FMLA leave will be able to return to the same position or a position with equivalent status, pay, benefits, and other employment terms. The position will be the same or one that is virtually identical in terms of pay, benefits, and working conditions. The City may choose to exempt certain key employees from this requirement and not return them to the same or similar position when doing so will cause substantial and grievous economic injury to business operations. Key employees will be given written notice at the time FMLA leave is requested of his or her status as a key employee.

j. **Use of Paid and Unpaid Leave**
An employee who is taking FMLA leave because of the employee's own serious health condition or the serious health condition of a family member must use all PTO and any other accrued leaves prior to being eligible for unpaid leave. PTO shall be exhausted prior to other accrued leave. Paid leaves run concurrently with FMLA leave if the reason for the FMLA leave is covered by the established policies.

Workers' compensation leave (to the extent that it qualifies) and injury leave will be designated as FMLA leave and will run concurrently with FMLA.

An employee who is taking leave for the adoption or foster care of a child must use all PTO and other accrued leaves prior to being eligible for unpaid leave.

An employee who is using FMLA leave for a qualifying exigency must use all PTO and other accrued leaves prior to being eligible for unpaid leave. An employee using FMLA leave to care for a covered service member must also use all PTO and other accrued leaves prior to being eligible for unpaid leave.

k. **Intent to Return to Work from FMLA Leave**
On a basis that does not discriminate against employees on FMLA leave, the City may require an employee on FMLA leave to report periodically on the employee's status and intent to return to work.

l. **Coordination of FMLA Leave with Other Leave Policies**
The FMLA leave policies do not affect any federal, state, or local law prohibiting discrimination or supersede any state or local law that provides greater family or medical leave rights. For additional information concerning leave entitlements and obligations that might arise when FMLA leave is either not available or exhausted, please consult the City's other leave policies or contact the manager of employee benefits.

Section 15 Military Leave

In time of war or national emergency, those employees of the City of Midland who are members of a retirement system or participating in a retirement system sanctioned by the City, or who are holding permanent positions shall be entitled to military leave or absence without pay if called to duty with the Armed Forces through the process of selective service or membership in reserve components of the Armed Forces. The City also acknowledges that time spent by employees on military leave often is relevant or complementary to their workplace responsibilities and that the skills, leadership, discipline, and teamwork experience that employees acquire during military service can prove valuable on the job.

a. Accrual Leave Credit. Credit for PTO or other accrual leaves shall accrue only during military leave allowance described below. However, employees may be allowed to draw pay from their PTO, or other accrued leaves during an approved military leave.

b. Military Leave Allowance. In accordance with Section 437.202, Texas Government Code:

1) A person who is an officer or employee of the City and who is a member of the Texas military forces, a reserve component of the Armed Forces, or a member of a state or federally authorized urban search and rescue team is entitled to a paid leave of absence from the person's duties on a day on which the person is engaged in authorized training or duty ordered or authorized by proper authority for not more than 15 workdays in a fiscal year. During a leave of absence, the person may not be subjected to loss of time, efficiency rating, personal time, or PTO.

2) An employee of the City who is a member of the Texas military forces, a reserve component of the armed forces, or a member of a state or federally authorized urban search and rescue team and who is ordered to duty by proper authority is entitled, when relieved from duty, to be restored to the position that the employee held when ordered to duty.

c. Retirement System Credits. Employees who leave their deposits with the retirement system while on military leave shall retain their membership in the retirement system. The period spent by such employees on military leave shall count toward membership service but shall not increase the retirement benefits due to the employee unless he makes retirement deposits to cover all or a portion of the time spent on military leave. If the employee does make such retirement contributions after returning from military leave, the City shall match such deposits of the employee. Employees desiring to withdraw their retirement deposits from the system when they enter upon military leave may do so. However, such action means that these employees will lose retirement credit for the years they belonged to the retirement system prior to beginning military leave. Notwithstanding the foregoing, current rules of a particular system shall control.

d. Reinstatement upon Return from Military Leave. All employees who have been granted a military leave of absence, and who apply for reinstatement with the City not later than thirty (30) days after being discharged or separated from the Armed Forces, will be re-employed in the same position or a position of like seniority and status at the then current rate of pay, provided such employees are physically and mentally qualified for reinstatement. If upon termination of such leaves of absence, employees are physically or mentally incapacitated and not qualified to perform the duties of the positions held at the time of commencement of such absences, employees shall be eligible for placement in such other positions for which they may qualify. In the event two or more employees have occupied the same position and have been called into service, the first employee occupying and leaving such position after the effective date of this policy shall have first priority on reinstatement; the second person occupying and leaving such position shall have second consideration, etc. An attempt will be made to re-employ every employee who enters the Armed Forces and upon his release desires to re-enter employment with the City of Midland.

e. Credit for Service Time. For the purpose of computing longevity pay, a military leave shall not be counted as a break in service and upon return of an employee to duty with the City his service time shall be increased by an amount equivalent to the time spent on military leave.

f. Accrued Balances of Paid Time Off and Other Accrued Leaves. Any classified full-time employee who is a member of a military reserve organization which requires participation in a training program, will be granted a leave of absence from their respective duties without loss of time or efficiency rating or vacation time or salary on all days during which they shall be engaged in authorized training or duty ordered or authorized by proper authority, not to exceed fifteen (15) days in any one calendar year. For the purposes of this policy, a military leave day shall be defined as any consecutive 24-hour period. The employee must provide the City with a copy of the written orders prior to taking leave.

Any full-time employee who is a member of a military reserve organization that is called to active duty may use their accrued time to supplement their military pay. If the employee desires to return to his/her position at the City upon completion of military service, a request for "Military Leave of Absence" must be approved by the Director of Administrative Services prior to the leave. A copy of the written orders should be attached to this request. If the written order is not available upon departure, it must be

provided as soon as possible thereafter.
The accrued balances of PTO, or any other leaves may be used to supplement the military pay up to a maximum of 80 hours per pay period.

Fire Department Shift Personnel will be allowed to supplement the military pay up to a maximum of 112 hours per pay period.

An employee who intends to use this benefit must notify the employee's supervisor of such intent by completing the "Military Leave of Absence" form available in the Administrative Services office. A supervisor may not designate the time without the employee's consent.

Section 16 Lactation Break

City of Midland will provide a reasonable amount of break time to accommodate employees desiring to express breast milk for their infant child, in accordance with and to the extent required by applicable law. The break time, if possible, should run concurrently with rest and meal periods already provided.

The employee's supervisor will coordinate with Employee Benefits Manager or designee to make reasonable efforts to provide employees with the use of a room or location other than a restroom to express milk in private.

The designated space:

a) may be the place where the employee normally works if there is adequate privacy (for example, the employee's private office or a lockable conference room or another identified space);
b) should have an electrical outlet, table and chair, lock or signage on door prohibiting entry when in use; and
c) should be within reasonable proximity to the employee's work area.

Employees should make requests for break time in writing to their supervisor or manager as soon as practicable after an employee learns of the need for lactation break time or the need for a change in previously approved lactation break times.

Section 17 Injuries

a. **On the Job Injury Leave**

An employee injured in the line of duty shall receive workers' compensation or injury leave benefits under the terms and conditions prescribed in the applicable programs and as required by law.

1) Leave and Compensation: Injury leave is defined as fully compensable absence from work arising from an on-the-job accidental injury. An employee injured on the job, in the line of duty, may be granted injury leave, which shall not be charged against his accumulated PTO or other accrued leave, for the period of time he is disabled and unable to perform his duties but said injury leave shall not exceed one hundred eighty (180) work days. Injury leave runs concurrently with FMLA. Healthcare provider's statement is required indicating that the employee is unable to return to work and shall be required for an employee to receive injury leave. Any injury leave so granted is deemed to be purely discretionary on the part of the City and may be terminated at any time by change of these policies. The total amount of injury leave granted in conjunction with any given injury shall never exceed one hundred eighty (180) work days.

(i) An employee shall forfeit all rights to injury leave if the employee:
1. Is found to be working, either part-time or full-time for pay;
2. Resigns for any reason;
3. Is discharged for any reason;
4. Retirement or death;
5. Fails or refuses to comply with or follow, or disregards or violates the treating physician's instructions regarding treatment and/or rehabilitation of the injury;

6. Refuses to perform light, partial or part-time duty when offered by the Department Manager or designee, which does not require him to perform activities, which are restricted by the treating physician;
7. Falsifies or misrepresents his physical condition or capacity;
8. Refuses to return to duty on the working day he has been released to duty by the treating physician;
9. Fails to submit an acceptable physician's statement when requested by his supervisor or designee; or
10. Has been injured as a result of his failure to observe safety policies, procedures, or instructions as determined by the Employee's Department Manager or designee.

(ii) Injury Leave ends when:
1. The injured worker reached one hundred and eighty (180) work days of leave; or
2. The injured worker returns to work with or without restrictions; or
3. A healthcare provider determines that no further healing or recovery from the injury can be expected (maximum medical improvement); or
4. The injured worker reaches the end of the Temporary Income Benefits period, which is 104 weeks after the eighth day of work-related disability (statutory maximum medical improvement).

If the injury is controverted, the employee exhausts all leave as defined above, or the employee experiences sporadic absence from work, the employee may be eligible to begin drawing weekly benefits payable under the Workers Compensation Act. If so, the employee may use accrued leaves to supplement their workers' compensation income and retain their active status with the City of Midland

2) Procedure:

(i) If an employee's injury meets the criteria for a serious health condition, the employee's injury leave shall run concurrently with FMLA leave, as provided in Section 14 of this Chapter.
(ii) An employee who sustains an injury or illness in the performance of the employee's duties shall fully and promptly report the injury or illness, however minor, to the employee's supervisor as soon as possible, but no later than the end of the business day. Written notification of the injury or illness must be received by the Workers' Compensation / Leave Coordinator within 24 hours of the incident in order for the employee to be granted injury leave.
(iii) Injury leave taken by an employee because of a substantiated and documented work-related injury sustained during the course of employment shall not be charged against the employee's PTO or other accrued leaves
(iv) During the approved injury leave, PTO shall continue to accrue.
(v) The Workers' Compensation / Leave Coordinator will coordinate with the employee's healthcare provider to determine whether the injury would allow an employee to perform modified temporary work or other duties.
(vi) An employee who is on injury leave shall update the employee's supervisor or the Workers' Compensation / Leave Coordinator of the employee's status at regular intervals.
(vii) An employee who is unable to perform the essential functions of the employee's position due to a disability, injury, illness, or medical condition (and reasonable accommodation is not possible) is not guaranteed a return to the employee's position at the conclusion of the disability, injury, illness, or medical condition.

b. **Off the Job Injury**

Injuries, Off the Job (Leave and Compensation). An employee injured off the job shall have the resulting absence from work, if any, charged against the employee's accumulated PTO leave.

Any employee so injured who has no accrued PTO leave or has exhausted the employee's PTO leave may receive compensation during his absence from work by using other accrued leave time, if any.

If an employee's injury meets the criteria for a serious health condition, the employee's time off shall run concurrently with FMLA leave, as provided in Section 14 of this Chapter.

All absence reporting requirements as outlined in Section 9, b. of this Chapter must be followed.

c. **First Responder Illness/Injury Leave**

1) Definitions. For purposes of this subsection:

(i) "Emergency medical services personnel" means a person described by Section 773.003, Health and Safety Code, who is a paid employee of the City of Midland.

(ii) "Firefighter" means a firefighter who is a permanent, paid employee of the City of Midland's Fire Department. The term includes the chief of the Fire Department.

(iii) "Line of duty illness or injury" means an illness or injury that occurs during the course and scope of employment.

(iv) "Police officer" means a paid employee who is full-time, holds an officer license issued under Chapter 1701, Occupations Code, and regularly serves in a professional law enforcement capacity in the Police Department, the Municipal Court, or other department of the City of Midland. The term includes the chief of the Police Department.

2) Illness / Injury Leave:

A firefighter, police officer, or emergency medical services personnel shall be provided a leave of absence for a line of duty illness or injury. This leave is with full pay for a period commensurate with the nature of the line of duty illness or injury. If necessary, the leave shall continue for up to one year. The City will continue the employee's health benefits during the leave period at the same level and under the same conditions as if the employee was continuously at work. Workers' compensation benefits shall be offset to the extent applicable by any amount for incapacity received as provided by this subsection. Leave under this subsection shall run concurrently with FMLA leave.

3) Use of PTO; Temporary Leave:

If a firefighter, police officer, or emergency medical services personnel is temporarily disabled by a line of duty injury or illness and the paid leave of absence granted under this subsection has expired, the employee may use accumulated PTO or other accumulated leaves for a period commensurate with the nature of the temporary disability. A firefighter, police officer, or emergency medical services personnel who requires additional leave shall be placed on unpaid temporary leave.

4) Medical Certification:

When requested by the Workers' Compensation / Leave Coordinator, a firefighter, police officer, or emergency medical services personnel who receives leave under this subsection shall provide medical certification and recertification documents from a health care provider to support the need for the leave.

5) Return to Duty:

If able, a firefighter, police officer, or emergency medical services personnel may return to modified duty as outlined in Section 18.a of this chapter, while recovering from a temporary disability. If medically necessary, the modified duty assignment may continue for up to one year.

A firefighter, police officer, or emergency medical services personnel who takes leave under this subsection may be required to provide a fitness for duty clearance from a health care provider upon return. After recovery from a temporary disability, a firefighter, police officer, or emergency medical

services personnel shall be reinstated at the same rank and with the same seniority the person had before going on leave.

Section 18 Return to Work / Inability to Return to Work

a. **Modified Duty**

"Modified Duty" is a temporary assignment which is for a specified and limited period and fulfills a necessary job function, appropriate to the employee's skills and level of experience as determined by the City, and which the employee can perform without violating any medical restriction imposed as a result of a temporary disability, illness or injury, for which the employee is compensated at the employee's normal rate of pay and benefits.

The number, availability and duration of such assignments are limited by departmental needs as determined by the Department Manager or the Department Manager's designee.

If restrictions as noted on the Physician's Release to Return to Work form are determined to be permanent, the employee shall not be eligible for a Modified Duty assignment.

1) Limitation of Modified Duty Assignment:
   The Modified Duty assignment shall end on the earliest of:
   (i) The date when the employee is released to the employee's regular schedule with no restrictions as evidenced on the Physician's Release to Return to Work form;
   (ii) The date when a physician determines the employee's has permanent restrictions;
   (iii) The date the Maximum Modified Duty Assignment Period ends; and
   (iv) The date the Employee fails to take a required medical examination, without good cause.

2) Maximum Modified Duty Assignment Period:
   A Modified Duty assignment may be intermittent or continuous, but in no event shall such an assignment continue for more than 180 work days after the date when the employee was initially unable to perform each and every essential function of the employee's job (the "Maximum Modified Duty Assignment Period"). At the end of the Modified Duty assignment, if an employee is unable to return to work without restrictions, the employee may be placed on the appropriate leave.

   Once an employee has been unable to perform each and every essential function of the employee's position that the employee held when the disability, illness or injury arose for 90 calendar days during a 12 month period or has exhausted all leave granted under previous sections of this Chapter (whichever comes first), the employee may request a meeting with the employee's Department Manager, the Director of Administrative Services, or the City Manager or the City Manager's designee in order to determine if the City has any current vacancies for which the Employee is qualified and is currently able to physically perform.

3) Procedure:
A "Physician's Release to Return to Work" form shall be completed by a physician (for injury leave, such physician shall be one of the designated providers selected for the City's workers' compensation insurance) and shall include the probable length of the restrictions and the nature of the restrictions. An additional statement confirming the ability to perform the Modified Duty assignment may also be required.

Once an employee has seen a physician and the physician has completed the Physician's Release to Return to Work form indicating that the employee can return to work, the applicable procedures below shall be followed:

(i) Return to work with Regular Hours and No Restrictions:
   The employee obtains the completed Physician's Release to Return to Work form from the physician indicating that there are no restrictions and that the employee has the

ability to work during the employee's regularly scheduled hours. This form must be submitted to the employee's supervisor and the Office of Administrative Services' Workers' Compensation / Leave Coordinator upon the employee's return to work.

(ii) Return to Work with Restrictions:
The employee obtains the completed Physician's Release to Return to Work form from the physician indicating that the employee needs (i) restricted duties (for example, limitations on lifting, walking, stooping, bending, etc.) and/or (ii) restricted number of hours worked per day or per week, with or without limitations on the duties performed.

1. If the physician releases the employee to return to work with restrictions, as evidenced by completion of the Physician's Release to Return to Work form, the form must be submitted to the employee's supervisor and the office of Administrative Services' Workers' Compensation / Leave Coordinator prior to or immediately upon return to work for consideration of a Modified Duty assignment. The supervisor and a representative from Administrative Services will review the restrictions and determine if the employee is eligible for a Modified Duty assignment. The employee must report for work at the time designated by the employee's supervisor.
2. If the employee is approved for a Modified Duty assignment, the employee shall comply with the restrictions indicated in the Physician's Release to Return to Work form. If the employee's restrictions change at any time, the employee shall notify the employee's supervisor immediately and submit to the supervisor and the office of Administrative Services Worker's Compensation / Leave Plan Coordinator a copy of the revised Physician's Release to Return to Work form.
While working a Modified Duty assignment, the employee may be required to provide periodic updates from the physician up to every 30 days. Additionally, the employee may be required to submit to a periodic physical examination as a condition of continued Modified Duty status.

3. If a Modified Duty assignment is not available, a representative from Administrative Services will determine what remaining leave benefits are available to the Employee, if any.

If the employee is unable to perform the Modified Duty assignment, the employee shall contact the physician to review and potentially revise the Physician's Release to Return to Work form.

b. **Inability to Return to Work**.

When a treating physician determines that an employee is permanently incapable of returning to work in the employee's full duty capacity, the City will accommodate such disability to extent it is required under the Americans with Disabilities Act, or the employee may apply for available positions within the City for which the employee is qualified. The Department Manager or his designee, based on the assessment of a licensed medical doctor that an employee is not able to perform the required physical duties or tasks of employee's present position (regardless of whether the incapacity is due to on the job injuries, off the job injuries, or illness), then the employee will not be returned to the employee's full duty with the City until a medical doctor states in writing that the employee is able to perform all the required physical tasks or duties of the position. Wherever possible, it is the policy of the City to provide Modified Duty to employees who have been released by a physician to return to work in a limited capacity.

Once an employee has exhausted all leave granted to the employee under previous sections of this Chapter or has been unable to perform each and every essential function of the position which he held at the time of injury with the City for 90 calendar days during a 12 month period (whichever comes first), the employee may request a meeting with the employee's Department Manager, the City's Director of Administrative Services, or the City Manager in order to determine if the City has any current vacancies for which the employee is qualified and is currently able to physically perform.

If a job vacancy exists that the employee is qualified for and can physically perform, the employee may apply for that position. The employee has the choice to either accept or decline any offered position:

1) If the offer is accepted, it is recognized and understood by the employee that the employee may have to take a reduction in salary.
2) Any employee so reassigned will be compensated at a pay rate in the pay range of the position to which the employee has been reassigned. However, the affected employee shall be entitled to start in the new band/zone equal to his previous salary if that band/zone is equal to or below the midpoint of the new pay range.
3) If the employee does not seek another position, or if the offer of a new position is declined, or if no job vacancy exists that the employee is qualified for and can physically perform, then the employee shall be allowed to exhaust any leave granted to the employee under previous sections of this Chapter

Under no circumstances will the City continue an employee's active status once the employee exhausts the leave granted under previous sections of this Chapter.

Once an employee is placed on inactive status, the City shall no longer pay the employee a salary, and the employee shall no longer accumulate PTO leave or other accrued leaves. The employee may continue to receive the employee's worker' compensation benefits, and the employee will also be able to retain the City's health insurance if the employee pays the rate as established by the City as required by the Consolidated Omnibus Budget Reconciliation Act (COBRA). Such coverage shall be limited to the minimum length of time established by the Act.

An employee who has been placed on inactive status under this policy may apply for positions with the City of Midland for which the employee is qualified and physically able to perform. Should an employee who has accepted another position with the City or been placed on inactive status due to an on the job injury recover and be able and qualified to perform all the tasks required of the employee's previous position within 12 consecutive calendar months from the date of the employee's acceptance of the new position with the City or placement on inactive status, then the employee will be offered reinstatement to the previous position should said position become vacant. The employee's recovery must be confirmed by a written statement from a licensed medical doctor. The City shall have the right to request a second medical opinion, but that second opinion shall be paid for by the City. Under this policy, no employee's
inactive status will continue for more than 12 consecutive months, unless required by federal, state or local law.

Section 19 Paid Quarantine Leave

a. Purpose.

The purpose of this policy is to provide for and maintain employment benefits for certain employees who are ordered to quarantine or isolate due to a possible or known exposure to a communicable disease while on duty.

b. Applicability

This policy applies to the following employees of the City:

1) Fire protection personnel; and
2) Peace officers of the Police Department and the Municipal Court.

c. Conditions

The paid leave and benefits provided by this policy are only available to an employee who is ordered to quarantine or isolate due to a possible or known exposure to a communicable disease while on duty by the employee's supervisor or the City's health authority. An employee may be required to provide proof of an order to quarantine and may be denied paid leave or benefits if the employee fails to provide proof within a reasonable time.

d. Benefits

If an employee is ordered to quarantine under the conditions in Subsection c above, the employee will receive all employment benefits and compensation for the duration of the leave, including paid leave accrual, pension benefits, and health benefit plan benefits that the employee would customarily be provided on paid leave.

e. Reimbursement for Expenses

If an employee is ordered to quarantine under the conditions in Subsection c above, the employee may request reimbursement for reasonable costs related to the quarantine, including lodging, medical treatment and transportation by submitting a reimbursement request via the Employee Self Service portal of the Human Resources Information System within five (5) days after returning from the leave ordered under this policy. An employee may be required to provide receipts or proof of payment with the request and reserves and may be denied reimbursement that the City deems unreasonable or unrelated to quarantine.

f. Effect on Paid Leave Balances

The City will not reduce an eligible employee's PTO or other paid leave balance for quarantine leave ordered under this policy.

Section 20 Peace Officer and Telecommunicator Mental Health Leave

a. Purpose

The purpose of this Section is to allow the use of mental health leave by peace officers and full-time telecommunicators employed by the City who experience a traumatic event while on duty.

b. Applicability

This Section applies to licensed peace officers and full-time telecommunicators employed by the City. For purposes of this Section, "telecommunicator" means a person authorized to act as a telecommunicator under Section 1701.405, Occupations Code.

c. Conditions

An employee to whom this Section applies shall be allowed up to three (3) days or (30) hours of paid mental health leave per calendar year, provided that:

1) the leave is:
   (i) approved by the employee's supervisor, the Chief of Police (for Police Department peace officers and full-time telecommunicators) or the Presiding Judge (for Municipal Court peace officers); or
   (ii) ordered by a mental health professional; and
2) the leave is taken as a result of a traumatic event that occurred while on duty.

d. Anonymity

The City will keep requests to take mental health leave and any medical information related to mental health leave under this policy confidential to the extent allowed by law and separate from the employee's general personnel file held by the Administrative Services Department. The City cannot guarantee the anonymity of information that is otherwise public or necessary to carry out the City's duties under applicable laws.

e. Effect on Paid Leave Balances

The City will not reduce an eligible employee's PTO, or other paid leave balance for mental health leave taken under this policy.

Section 21 Special Leave with Pay

Department Managers may grant employees special leave with pay and actual expenses to attend professional conferences, conventions or short courses or to visit other cities in the interest of the City, as authorized by the City Manager.

Section 22 Mental Health Day

The City is committed to protecting our employees' health, safety, and well-being. Employees may access confidential free counseling through the City's Employee Assistance Program (EAP).

Each full-time employee shall receive two (2) Mental Health Days per calendar year. An employee who wishes to take a Mental Health Day shall notify the employee's immediate supervisor prior to the start of the employee's scheduled shift, if practical. Documentation of the absence shall not be required. The reason for such absence (i.e., use of a Mental Health Day) shall be held confidential as reasonably practicable. Unused Mental Health Days shall not be carried over into the following year, and employees will not be provided with payment in lieu of taking Mental Health Days. In addition, upon an employee's termination of employment or retirement, no payment shall be provided for unused Mental Health Days.

Section 23 Community Service Leave

The City encourages employees to be active citizens and provides this leave to participate in organizations and activities that benefit the local community.

All full-time employees are eligible to request eight (8) hours of Community Service Leave per calendar year. Community Service Leave may be taken in one (1) hour increments. An employee who wishes to take Community Service Leave shall notify the employee's supervisor thereof and obtain approval prior to taking Community Service Leave. An employee, upon request, shall provide documentation to support the taking of Community Service Leave, and a failure to provide sufficient documentation thereof may result in the City's refusal to provide Community Service Leave. Community Service Leave may not be used for events with a political or religious purpose. Community Service Leave is noncumulative and nontransferable.

Section 24 Civic Duties Leave

All employees will be allowed time off with pay to attend the civic duties of voting in elections, serving as members of jury panels, or appearing before any tribunal by virtue of subpoena or summons.

Section 25 Leave of Absence

Department Managers may grant an employee one day of paid administrative leave in regard to disciplinary or safety issues. Any additional paid administrative leave in regard to discipline, safety, or investigations must be approved by the City Manager. Department Managers may grant leaves of absence without pay to regular employees, not to exceed thirty (30) days in duration. Requests for such leave shall be in writing and

submitted well in advance of the date the Employee will commence such leave. In granting such leaves, the Department Manager shall give primary consideration to the City's need for the Employee's services. Leaves of absence without pay may be granted for any legitimate purpose; however, employees will be obligated to show that the granting of such leave is to the interest of the City. Leaves of absence without pay in excess of thirty (30) days may be granted only with the approval of the City Manager and in no case shall exceed six (6) months.

Section 26 Absence without Leave

No employee may absent himself from duty for a single day or any part of a day without permission of his Department Manager. Any such absence will be without pay and the employee may be subject to adverse action. Any employee absent from work without notice for three (3) consecutive days will be considered as having abandoned the job. Any employee absent from work without notice for three (3) consecutive days will be considered as having abandoned the job. Such abandonment shall be considered a voluntary resignation from employment, and the City will process such separation of employment as a voluntary resignation.

Chapter VI

Wage and Salary Administration

Section 1 Application of Rates

All employees occupying a position in the classified or unclassified service shall be paid a salary or wage within the range currently set for that position's class under the pay plan as approved by the City Council. If an employee begins service in the middle of a pay period, he will be paid by the calculated hourly rate for the total hours worked during that time.

Section 2 Pay Rates for New Employees

Pay rates for new or probationary employees will normally be at the minimum step in the salary range established for the position that the employee is occupying. Department Managers, with the approval of the Administrative Services Director, may pay a new employee a beginning rate 15% above the minimum established in that range. Appointments with a pay rate of more than 15% above the minimum for a particular salary range may be made only with the approval of the City Manager.

Section 3 Pay Progression

Pay progression for employees in classified positions will be based on documented criteria that may include performance, attendance, certifications, training, skills testing, length of service, or other job specific factors. Pay progression dates and the amounts of the progressions shall be recommended on an annual basis by the City Manager and approved by the City Council through the budget process and/or amendments to the City's annual budget.

Section 4 Total Rate of Pay

No employee shall be paid at, or no salary advancement shall be made which would compensate an employee at, a rate more than the maximum or highest step in the salary range to which that employee's position has been assigned. Exceptions may only be made when deemed by the City Manager to be advantageous to the City service. Any such pay increases shall not exceed the assigned pay range by more than 10%. Market adjustments which impact City of Midland pay plans or cost of living adjustments which impact municipal employee salaries must be approved by the City Council.

The City of Midland takes all reasonable steps to ensure that employees receive the correct amount of pay in each paycheck and that employees are paid promptly on scheduled paydays. In the unlikely event that there is an error in the amount of pay an employee receives, he should promptly bring the discrepancy to the attention of his immediate supervisor or the Payroll Manager. If the employee has been underpaid, the City will pay the employee the difference as soon as possible. If the employee has been overpaid, arrangements will be made to return the overpayment to the City as soon as possible. Noemployee is entitled to retain any pay in excess of the amount he has earned according to his establishedrate of pay.

Section 5 Part-time, Temporary and Seasonal Rates

An employee who works regularly at less than the established workday or workweek shall be paid by the hour or at a salary proportional to the amount of time worked. The hourly or monthly rates for part-time, temporary or seasonal employees shall be established by the Department Manager concerned and the Administrative Services Director after giving due consideration to the ranges and pay rates in effect for similar positions in the current pay plan.

Section 6 Pay Rates for New Positions

Whenever a new position is created the Administrative Services Director shall, with the department manager involved, study the duties and responsibilities of the new position and in light of the existing positions and pay rates in the "Position Classification and Pay Plan" submit to the City Manager a recommendation for the proper pay range for the new position.

Section 7 Termination Pay

All employees who leave the service of the City for any reason shall receive all pay that may be due them with the following qualifications:

a. Regular employees shall be paid for unused PTO leave as set out in Subsection c of Section 9 of Chapter V.

b. An employee whose employment is terminated before the end of a pay period shall be paid for the total hours actually worked through the employee's termination date.

c. Effective October 1, 2023, any employee who is eligible to retire under either TMRS or FRRF at the time of the employee's termination of employment or retirement shall receive payments for accrued PTO as set out in Section 9 of Chapter V.

Section 8 Longevity Pay

All regular full-time employees shall be entitled to additional compensation at a rate of six dollars ($6.00) per month for each full year of continuous service with the City. The beginning of the pay period nearest the anniversary date the employee began employment with the City shall be the effective date of longevity pay increases. The rate of longevity pay shall coincide with the rate established by Texas Local Government Code Section 142.

Section 9 Performance Appraisal System

The purpose of the system is to improve employee productivity, to provide better communicationsbetween supervisors and those they supervise, to identify needs for training or other remedial actions among the workers, to provide upward mobility and the cultivation of skills and abilities, and to further the City service as a good place to work.

Evaluations shall be used as guides to judgment in granting permanent status to probationary employees, in offering promotions to employees, in recommending employees for merit pay increases, in determining that dismissals or other disciplinary actions based on performance are in fact for just cause, in avoiding any possibilities of discrimination or prejudice, and in other personnel matters.

The immediate supervisor of the employees being evaluated shall perform evaluations, but the evaluations may be reviewed and revised by Division and Department Managers before becoming final.

Evaluations of supervisory employees shall take into account the skill and judgment shown by such supervisors in the rating of those responsible to them.

Evaluations shall be completed shortly before the end of probation and thereafter on an annual basis.

An evaluation of an employee may also be conducted at any other time at the option of his supervisor; such specific evaluations are appropriate if the employee is being considered for promotion, is in need of remedial action, or is to be warned of possible disciplinary action.

If any employee believes that the performance evaluation is erroneous, unfair, or prejudiced, he may appeal the evaluation in the same way as is provided for any other grievance in Chapter IX of the personnel rules.

Section 10 Compensation Policy Statement

It shall be the policy of the City of Midland to maintain a pay structure for all municipal employees that will allow said employees the opportunity to receive reasonable, comparable wages in relation to comparable jobs in the relevant labor markets. The City Council shall establish both regional and statewide comparative markets consisting of municipalities in the population range of 75,000 to 200,000 (or larger if they are in the regional market) that shall be used in obtaining comparative wage data.

The City of Midland will also strive to maintain internal equity in the municipal job classification and pay structure through the use of a sound job analysis process and continue to promote the development and refinement of pay structures which reward employee performance and development.

Toward these ends, administrative regulations and pay structures have been adopted and may be modified as needed to accomplish the objectives of this policy, to comply with federal or state regulations, or to promote the efficiency of the City Service. At least one general review of the classification and pay plans should take place in each succeeding two-year period. The City Manager may appoint an Advisory Committee to conduct this review.

It shall be the responsibility of the City Manager to maintain administrative position classification and pay plan regulations in compliance with these policies.

Chapter VII

Transfer, Promotion, Resignation and Retirement

Section 1 Transfer

After notice to the Administrative Services Director, an employee may be transferred by a department manager at any time from one position to another position in the same or comparable class. If the transfer involves a change from one department to another department, both Department Managers must consent to the transfer unless the City Manager orders the transfer for the purpose of economy or efficiency. No person shall be transferred to a position for which he does not possess the necessary minimum qualifications, according to the classification plan.

Section 2 Promotion

Insofar as practical and consistent with the best interest of the City, all vacancies in the classified and unclassified service shall be filled by promotion of persons already employed by the City. If, in the opinion of the Department Manager or other person responsible for filling the vacancy, a position can best be filled by hiring a new employee, such information shall be forwarded to the Administrative Services Director who shall take the necessary steps to assist in recruiting qualified applicants for the position.

Section 3 Resignation

An employee who wishes to leave the employment of the City shall give at least two (2) weeks' notice to the supervisor before the effective date of his resignation. Such notice, either oral or written, shall state the reasons for such resignation. The Department Manager shall immediately notify the Administrative Services Director of such resignation and indicate the reasons therefore and whether the employee's services have been satisfactory.

Section 4 Termination Interview

The employee's termination interview and final paycheck will be received in the Administrative Services Office.

Section 5 No Recommendations or References

No person is authorized to act on behalf of the City in making recommendations or giving references with respect to former or current City employees. Any City employee who gives a recommendation or reference with respect to a current or former City employee shall be acting in his or her individual capacityand not as an agent, employee, or representative of the City of Midland, Texas, said act being beyond thescope of said employee's employment. Any employee who is sued or becomes involved in a claim or civil lawsuit due in any part to his or her giving a reference or recommendation shall not be entitled to a paidor other legal defense by the City of Midland.

Section 6 Requests for Employment Verification

Information regarding the employment of all current and former City employees shall be verified by Administrative Services only upon written request signed by the current or former employee. In absence of a written request signed by the current or former employee, Administrative Services shall be authorized to verify only the following information:

a. The date the employee began his employment with the City of Midland,

b. The date the employee ended his employment with the City of Midland,

c. The positions held while employed by the City of Midland,

d. The Department(s) to which the employee was assigned while employed by the City of Midland.

No person other than the Director of Administrative Services or the Director's designee shall be authorized to act on behalf of the City of Midland with respect to the verification of employment information.

Section 7 Personnel Files

The City of Midland retains employment records in a personnel file with the Administrative Services Department. The information contained in the file is the property of the City and must be maintained for government and record-keeping purposes. Therefore, all employees are required to notify the Administrative Services Department immediately if there is any change in relevant personal or employment information such as changes in address, phone numbers, marital status, emergency contact,insurance beneficiary, number of dependents, or legal name.

All files connected with an employee are considered strictly confidential, and access will be limited to those who have a job-related need to know the information, those who have been authorized to view the file, and as required by law. If an employee wishes to view his personnel file, he must submit written request with the Administrative Services Department. Upon receipt and approval of such request, an appointment will be scheduled for the employee to view his file. An employee may not remove or alter any information in the file in any way.

If an employee believes that information in his personnel file is incorrect, he may submit a written request to Administrative Services for change(s) to be made. If such a request is denied, the employee may request a statement of disagreement be placed in his file. This statement of disagreement will become a permanent part of the employee’s file.

The City of Midland considers falsification of personnel records to be a serious offense, and upon discovery can lead to disciplinary action up to and including termination.

Chapter VIII

Adverse Action

Section 1 Adverse Action

a. Purpose of Chapter

The purpose of this Chapter is to establish policies and administrative procedures for addressing Prohibited Conduct (as defined herein) and employment separation of City of Midland employees. The policies and procedures established herein are authorized and adopted, and the same shall be construed according to the plain meaning of its language unless defined otherwise. No policy or procedure established by this Chapter shall be enforced or interpreted in a manner that limits or abrogates protections afforded by law. The remedies set forth in this Chapter are exclusive.

b. Definitions.

In this Chapter:

1) "Adverse Action" means an administrative action taken by a Department Manager against an Employee because of the Employee's Prohibited Conduct. Said administrative actions include the following:
    a) Oral Reprimand;
    b) Written Reprimand;
    c) Suspension from employment without pay;
    d) Demotion from a current position to a lower position with lesser responsibility or compensation; and
    e) Termination of employment.
2) "Appeal Hearing" is the initial proceeding at which the Employee may contest an Adverse Action.
3) "Business Day" means a day on which the City of Midland is open for business.
4) "City" means the City of Midland.
5) "Department Manager" means the City department manager for the department that the Employee is assigned to. For the purpose of this Chapter, "Department Manager" also means an Assistant City Manager, Deputy City Manager, or the City Manager if a City department manager, Assistant City Manager, or Deputy City Manager is deemed to have engaged in Prohibited Conduct.
6) "Employee" means an employee of the City of Midland. For the purpose of this Chapter, "Employee" also means a Department Manager or Employee within the City Manager's Office if such person is deemed to have engaged in Prohibited Conduct.
7) "Hearing Officer" means the City official that presides over the Appeal Hearing.
8) "Lay-Off" means the employment separation between the Employee and the City that is not the result of an Adverse Action.
9) "Name-Clearing Hearing" means a proceeding before the City Manager at which the Employee may address allegations made by the City or its officials relating to the Employee's termination.
10) "Notice of Appeal" means the written notice submitted to the Administrative Services Department by the Employee seeking administrative review of an Adverse Action.
11) "Notice of Appeal to the Personnel Appeals Board" means the written notice submitted to the Administrative Services Department by the Employee seeking the Personnel Appeals Board's review of an Adverse Action.
12) "Notice of Hearing Officer Determination" means the written notice issued by the Hearing Officer containing the Hearing Officer's final determination resulting from the administrative review of an Adverse Action following an Appeal Hearing.

13) “Notice of Personnel Appeals Board Determination” means the written notice issued by the Personnel Appeals Board containing its final determination resulting from its review of an Adverse Action following a Personnel Appeals Board Hearing.
14) “Personnel Appeals Board” means the administrative body that presides over the Personnel Appeals Board Hearing.
15) “Personnel Appeals Board Hearing” means the final proceeding at which the Employee may contest an Adverse Action.
16) “Prohibited Conduct” means conduct of a character and nature that constitutes or is reasonably related to the following:
    a) Consumption and/or possession of alcohol or narcotics while on duty or using City-owned property;
    b) Consumption and/or possession of alcohol or narcotics in a manner that forms the basis of a crime;
    c) Criminal conduct;
    d) Delinquency;
    e) Dishonesty, including forgery, falsification of documentation, or any other falsifying action;
    f) Disruptive behavior that limits or restricts workplace efficiency;
    g) Failure to maintain necessary professional certifications or authorizations;
    h) Failure to perform employment duties;
    i) Immoral behavior, including behavior that may adversely affect the City or its officers, officials, employees, or agents, or behavior that may reasonably undermine the confidence of the public;
    j) Misappropriation or destruction of City property or information;
    k) Subversive behavior, including fighting, intimidation, profanity, insubordination, negligent or reckless actions, discourteousness, safety rule violations, misuse of City property, or violation of any established procedure, order, directive, or protocol;
    l) Unsatisfactory attendance;
    m) Failure to reasonably cooperate during an investigation involving alleged misconduct; and
    n) Violation of any policy, standard, or provision of the City of Midland, Texas Personnel Policies.
17) “Supervisor” means the person charged with the daily oversight and management of the Employee contesting an Adverse Action.
18) “Workday” means a day (including weekend days) on which the Employee is scheduled to report to work.

c. Notice Requirements

1) Any notice or communication required or permitted pursuant to this Chapter shall be in writing.
2) Subject to Section 1.c(3), a notice or communication required or permitted pursuant to this Chapter shall be deemed to be delivered and received on the date said notice or communication is:
    a) Personally delivered to the respective party to whom it is directed;
    b) Deposited by certified mail; or
    c) Sent by electronic mail.
3) Notwithstanding Section 1.c(2), a notice or communication that is sent to the City, or its employees or officials, shall be deemed to be delivered and received on the date that Administrative Services Department is in actual or physical receipt of said notice or communication.
4) The delivery of a notice or communication to the Employee shall be directed to one of the following:
    a) The City email address of the Employee;

b) The email address of the Employee's authorized representative;
c) The Employee's physical address on file with the Administrative Services Department; or
d) The physical address of the Employee's authorized representative.

5) The delivery of a notice or communication to the City or its officers, officials, or employees shall be directed to one of the following unless directed otherwise:
   a) The City email address of the current Administrative Services Director; or
   b) City of Midland
      300 N. Loraine Street
      Midland, Texas 79701
      Attn: Administrative Services Director.

d. Prohibited Conduct; Adverse Action

Employees shall refrain from engaging in Prohibited Conduct. An Employee that is deemed to have engaged in Prohibited Conduct may be subject to Adverse Action in accordance with the policies and procedures of this Chapter.

e. Discretionary Factors and Considerations Regarding Adverse Action Administration

If a Department Manager determines that the Employee engaged in Prohibited Conduct, the Department Manager may, in the Department Manager's sole and absolute discretion, incorporate the following factors and considerations in the Department Manager's decision regarding an Adverse Action to be administered to the Employee:

1) Nature of the Employee's duties;
2) Nature of the Prohibited Conduct;
3) Circumstances of the Prohibited Conduct;
4) The Employee's disciplinary history; and
5) Any other relevant facts or information.

f. Authorized Adverse Actions

Upon a Department Manager's determination that the Employee engaged in Prohibited Conduct, said Department Manager may administer (or cause to be administered) the following Adverse Actions:

1) Oral Reprimand – verbal discussion identifying the standard(s) of conduct that the Employee violated, and the corrective action required, if applicable. An Oral Reprimand may contain:
   a) Additional facts and information as deemed appropriate by the Department Manager; and
   b) A warning that future violations may result in additional Adverse Action(s) in accordance with this Chapter.
2) Written Reprimand – memorandum to the Employee (with a copy to the Employee's personnel file) identifying the standard(s) of conduct that the Employee violated, and the corrective action required, if applicable. A Written Reprimand may contain:
   a) Additional facts and information as deemed appropriate by the Department Manager; and
   b) A warning that future violations may result in additional Adverse Action(s) in accordance with this Chapter.
3) Suspension – temporary removal of the Employee from performing his/her duties and from receiving compensation. No Employee shall be suspended:
   a) For a period exceeding thirty (30) workdays; or
   b) More than thirty (30) workdays in any fiscal year.
4) Demotion – permanent reassignment of the Employee to a position with lesser responsibility or compensation.

5) Termination – permanent severance of the employment relationship between the Employee and the City.

g. Adverse Action Administration

Adverse Actions shall be administered in accordance with the following procedures:

1) Oral and Written Reprimands shall be issued as deemed appropriate by the Department Manager.
2) Suspension, Demotion, Termination
    a) Prior to issuing a Notice of Adverse Action to the Employee, a Department Manager shall deliver a copy of the proposed Notice of Adverse Action to the Administrative Services Department.
    b) Upon approval of the form of the Notice of Adverse Action by the Administrative Services Department, the Department Manager shall issue the Notice of Adverse Action to the Employee in accordance with the requirements of Section 1.c.

h. Notice of Appeal

1) If the Employee is issued a Notice of Adverse Action that results in a Suspension, a Demotion, or Termination, the Employee may seek administrative review of the Adverse Action by filing a Notice of Appeal.
2) A Notice of Appeal must be filed within two (2) Business Days of the affected Employee's receipt of a Notice of Adverse Action.
3) A Notice of Appeal shall consist of the following information:
    a) Employee name;
    b) Employee position;
    c) Department Manager name;
    d) Supervisor name; and
    e) General description of the basis for appeal.
4) A proper and timely Notice of Appeal shall be perfected upon the Administrative Services Department's receipt of the Notice of Appeal. If a Notice of Appeal does not contain the information required by Section 1.h(3), but is otherwise proper and timely, the Administrative Services Director shall notify Employee of such defect within two (2) Business Days following the Administrative Services Department's receipt of the Notice of Appeal.
5) Upon receiving notification that a Notice of Appeal does not contain the information required by Section 1.h(3), the Employee shall correct the defect and supplement the missing information within two (2) Business Days of the Employee's receipt of the notice required by Section 1.h(4).

i. Designation of Hearing Officer

1) Upon the perfection of a Notice of Appeal, the Administrative Services Director shall notify the City Manager of said Notice of Appeal within a reasonable amount of time after its delivery to the Administrative Services Department.
2) Upon receipt of the notice prescribed by Section 1.i(1), the City Manager shall designate a person to serve as the Hearing Officer to preside over the Appeal Hearing, which shall be:
    a) The City Manager;
    b) The Deputy City Manager; or
    c) An Assistant City Manager.
3) The City Manager shall notify the Administrative Services Director of the designation required by Section 1.i(2) following the same.
4) Upon request of the City Manager and agreement of the Presiding Judge of the Municipal Court, the Presiding Judge or Associate Judge of the Municipal Court may serve as the Hearing Officer.

5) If none of the foregoing individuals are available to serve as the Hearing Officer, the City Manager may designate another department manager with no knowledge of the facts that give rise to the Appeal Hearing to serve as the Hearing Officer.

j. Setting of Appeal Hearing

1) Following the designation of the Hearing Officer, the Hearing Officer shall provide the Administrative Services Director with dates and times of availability for the scheduling of the Appeal Hearing.
2) The Appeal Hearing shall occur no later than fifteen (15) Business Days following the perfection of the Notice of Appeal.
3) Notwithstanding Section 1.j(2), the Appeal Hearing may occur later than fifteen (15) Business Days following the perfection of the Notice of Appeal upon: (i) the mutual agreement of the Department Manager and the Employee; and (ii) the consent of the Hearing Officer.
4) Upon final setting of the Appeal Hearing, the Administrative Services Director shall send a Notice of Hearing to the Employee, the Hearing Officer, and the Department Manager. The Notice of Hearing shall consist of the following information:
    a) The name and position of the Employee;
    b) The name and position of the Employee's Supervisor;
    c) The date, time, and location of Appeal Hearing; and
    d) The reason/basis for appeal, as indicated by the Employee in the Notice of Appeal.

k. Appeal Hearing Procedure

1) The following persons shall be entitled to participate in an Appeal Hearing:
    a) Hearing Officer;
    b) Administrative Services Director;
    c) The Employee;
    d) A designated representative of the Employee (if any); and
    e) Department Manager.
    f) A representative of the City Attorney's Office may represent the Department Manager at the Appeal Hearing if the City Attorney receives and agrees to a request for representation from the Department Manager.
2) Minutes or Recording
    a) The Administrative Services Director shall take minutes of the Appeal Hearing or cause a recording to be made of the Appeal Hearing.
    b) The Administrative Services Department shall maintain the minutes or recording of an Appeal Hearing for at least three (3) years or as long as may be required by law.
    c) The Employee may provide, at the Employee's sole cost and expense, for a court reporter to record the Appeal Hearing. If the Employee provides for a court reporter to record the Appeal Hearing, the Employee shall provide the City with a copy of said recording (at no cost to the City) upon receiving a written request for such from the Administrative Services Director.
    d) The Employee may submit a written request for a transcript of an Appeal Hearing recording from the Administrative Services Department; provided, however, that the Employee shall pay all expenses associated with transcribing the Appeal Hearing recording, which shall be reasonably determined by the Administrative Services Director.
    e) Upon the submission of a request for a transcript of an Appeal Hearing recording, the Employee shall submit a deposit to the Administrative Services Department in an amount equal to the cost associated with transcribing the Appeal Hearing recording.
3) Witnesses
    a) The Employee, the Department Manager, and their respective witnesses shall be entitled to testify at the Appeal Hearing.

b) The Employee and the Department Manager shall be responsible for securing the availability of their respective witnesses.
c) The Employee and the Department Manager shall be entitled to call and question any witness who has knowledge of the incident(s) or alleged Prohibited Conduct that resulted in the Department Manager's administration of the Adverse Action.
d) The Hearing Officer shall have the right to exclude the testimony of any witness who is shown to not possess knowledge of the incident(s) or alleged Prohibited Conduct that resulted in the Department Manager's administration of the Adverse Action.
e) At the request of the Employee or the Department Manager, all witnesses shall be excluded from the Appeal Hearing; provided, however, that the Employee, the Department Manager, and their respective representatives may not be excluded (provided that a representative shall not testify). A request to exclude witnesses pursuant to this Section must be made prior to the commencement of any testimony.

4) Appeal Hearing Process

The Appeal Hearing shall proceed in the following manner:

a) Introduction; Swearing in of Witnesses

The Administrative Services Director shall make a formal introduction to the Appeal Hearing, which shall consist of the factual circumstances that form the basis for the Appeal Hearing. Said factual circumstances shall consist of, but not be limited to, the following:

1. Basis for Adverse Action as described in the Notice of Adverse Action;
2. Notice of Adverse Action administration date;
3. Notice of Appeal perfection date;
4. Identification of the Appeal Hearing participants; and
5. Identification of the representatives of the Employee and the Department Manager.

The Employee and the Department Manager shall notify the Administrative Services Director of their respective witnesses expected to testify during the Appeal Hearing. The Administrative Services Director shall swear in such witnesses prior to the elicitation of witness testimony.

b) Opening Statements

1. The Employee and the Department Manager (or their respective representatives) are entitled to give an opening statement prior to the commencement of any testimony. The Hearing Officer shall consider the opening statements of the Employee and the Department Manager in the following order:
    a. Department Manager
    b. Employee
2. The Employee and the Department Manager may waive the right to give an opening statement.

c) Case-in-Chief; Department Manager

1. The Department Manager's case-in-chief may consist of witness testimony, the submission of exhibits, and the Department Manager's testimony. The Hearing Officer shall have the sole discretion to determine the relevance of evidence presented during the Department Manager's case-in-chief.
2. Following the direct examination of a witness by the Department Manager, the Employee shall be afforded the opportunity to cross-examine said witness.
3. Following the cross-examination of a witness, the Department Manager shall be afforded the opportunity to re-examine said witness.
4. Following the re-examination of a witness, the Employee shall be afforded the opportunity to cross-examine said witness.

5. The Hearing Officer may examine a witness, the Department Manager, the Employee, or a representative of the Department Manager or Employee at any time.

d) Case-in-Chief; Employee
   1. The Employee's case-in-chief may consist of witness testimony, the submission of exhibits, and the Employee's testimony. The Hearing Officer shall have the sole discretion to determine the relevance of evidence presented during the Employee's case-in-chief.
   2. Following the direct examination of a witness, the Department Manager shall be afforded the opportunity to cross-examine said witness.
   3. Following the cross-examination of a witness, the Employee or the Employee's representative shall be afforded the opportunity to re-examine said witness.
   4. Following the re-examination of a witness, the Department Manager shall be afforded the opportunity to cross-examine said witness.
   5. The Hearing Officer may examine a witness, the Department Manager, the Employee, or a representative of the Department Manager or Employee at any time.

e) Closing Statements
   1. Following the cases-in-chief of the Department Manager and the Employee, the Department Manager and the Employee are entitled to give closing statements prior to the conclusion of the Appeal Hearing. The Hearing Officer shall consider the closing statements in the following order:
      a. Department Manager
      b. Employee
      c. Department Manager's rebuttal

f) Conclusion
   The Administrative Services Director shall conclude the Appeal Hearing and notify the parties of the date and time by which the Hearing Officer shall make a final determination.

g) The Rules of Evidence are not applicable to the Appeal Hearing; the Hearing Officer may consider all evidence submitted by the parties that the Hearing Officer deems relevant and consistent with the provisions of this Chapter.

h) The standard of compliance for observation of the rules and procedures contained in this Chapter shall be substantial compliance. The failure to observe any rule or procedure contained in this Chapter shall not form the basis of or give rise to any claims, damages, demands, suits, proceedings, or causes of action of any kind or character whatsoever against the City or its employees, agents, representatives, officials, Council or board members, including, but not limited to, claims for declaratory relief, claims under the state or federal constitutions, contract, tort, or other statutory or common law claims.

i) The Hearing Officer may adopt additional rules and procedures as may be deemed necessary for the orderly conduct of the Appeal Hearing. The Hearing Officer shall have the sole discretion to implement additional rules and procedures necessary for the orderly conduct of the Appeal Hearing.

5) Determination of Hearing Officer

a) The Hearing Officer shall consider the evidence presented at the Appeal Hearing and determine the following issues:
   1. Whether reasonable grounds exist to support the allegation(s) that the Employee engaged in Prohibited Conduct; and
   2. Whether a reasonable basis exists for the Department Manager's administration of the Adverse Action.

b) The Hearing Officer shall make his/her final determination within two (2) Business Days of the conclusion of the Appeal Hearing and issue a Notice of Appeal Hearing Determination.
c) Notice of Appeal Hearing Determination
    1. The Hearing Officer's final determination shall uphold, modify, or reverse the Adverse Action.
    2. The Hearing Officer shall issue a Notice of Appeal Hearing Determination to the Employee detailing said final determination, and issue a copy of the same to the Department Manager and the Administrative Services Director.
    3. If the Hearing Officer's final determination results in a suspension of five (5) Workdays or less, the Employee shall have no right to seek administrative review of the Adverse Action by the Personnel Appeals Board and the Hearing Officer's final determination shall be final.
    4. If the Hearing Officer's final determination results in a Suspension of more than five (5) Workdays, a Demotion, or Termination, the Employee shall have the right to seek administrative review of the Adverse Action by the Personnel Appeals Board. The Notice of Appeal Hearing Determination shall contain a statement indicating that the Employee has the right to seek administrative review of the Adverse Action by the Personnel Appeals Board in accordance with the requirements and procedures of this Chapter.
    5. A final determination resulting in the Employee's Suspension, Demotion, or Termination shall be stayed upon the filing of a Notice of Appeal to the Personnel Appeals Board in accordance with the requirements and procedures of this Chapter.

l. Notice of Appeal to the Personnel Appeals Board

1) If the Hearing Officer's final determination results in a Suspension of more than five (5) Workdays, a Demotion, or Termination, the Employee may seek administrative review of the Adverse Action by the Personnel Appeals Board by filing a Notice of Appeal to the Personnel Appeals Board.
2) A Notice of Appeal to the Personnel Appeals Board must be filed within two (2) Business Days of the Employee's receipt of a Notice of Appeal Hearing Determination.
3) A Notice of Appeal to the Personnel Appeals Board shall contain the information required by Section 1.h(3).
4) A proper and timely Notice of Appeal to the Personnel Appeals Board shall be perfected upon the Administrative Services Department's receipt of the Notice of Appeal. If a Notice of Appeal to the Personnel Appeals Board does not contain the information required by Section 1.h(3), but is otherwise proper and timely, the Administrative Services Director shall notify the Employee of such defect within two (2) Business Days following the Administrative Services Department's receipt of the Notice of Appeal to the Personnel Appeals Board.
5) Upon receiving notification that a Notice of Appeal to the Personnel Appeals Board does not contain the information required by Section 1.h(3), the Employee shall correct the defect and supplement the missing information within two (2) Business Days of the Employee's receipt of the notice required by Section 1.l(4).

m. Personnel Appeals Board; Composition

1) The Personnel Appeals Board shall consist of three (3) members, to include: (i) two (2) City Council members; and one (1) resident of the City who is not employed by the City.
2) All appointments to the Personnel Appeals Board shall be made by the Mayor.
3) The Mayor shall designate a Board member to serve as Chairman of the Personnel Appeals Board.

n. Setting of Personnel Appeals Board Hearing

1) Following the perfection of a Notice of Appeal to the Personnel Appeals Board, the Administrative Services Director shall notify the Personnel Appeals Board members of said notice and the Board members shall provide the Administrative Services Director with dates and times of availability for the scheduling of the Appeal Hearing.
2) The Personnel Appeals Board hearing shall occur no later than fifteen (15) Business Days following the perfection of the Notice of Appeal to the Personnel Appeals Board.
3) Notwithstanding Section 1.n(2), the Personnel Appeals Board hearing may occur later than fifteen (15) Business Days following the perfection of the Notice of Appeal upon mutual agreement of the Department Manager and the Employee.
4) Upon final setting of the Personnel Appeals Board Hearing, the Administrative Services Director shall send the Notice of Appeals Board Hearing to the Employee, Board members, and Department Manager. Upon final setting of the Personnel Appeals Board Hearing, the Administrative Services Director shall send a Notice of Personnel Appeals Board Hearing to the Employee, the Personnel Appeals Board members, and the Department Manager. The Notice of Personnel Appeals Board Hearing shall consist of the following information:
    a) The name and position of the Employee;
    b) The name and position of the Employee's Supervisor;
    c) The date, time, and location of Personnel Appeals Board Hearing; and
    d) The reason/basis for appeal, as indicated by the Employee in the Notice of Appeal.

o. Personnel Appeals Board Hearing Procedure

1) For purposes of the Personnel Appeals Board Hearing, the Personnel Appeals Board shall observe the rules and procedures prescribed by Section 1.k unless otherwise stated herein.
2) The Personnel Appeals Board shall serve as the final arbiter of all matters appealed pursuant to Section 1.l and shall have all rights, privileges, and obligations delegated to the Hearing Officer by Section 1.k for the purpose of this Section.
3) Open Meetings Act; Compliance
    a) The Personnel Appeals Board shall observe all applicable requirements of Chapter 551 of the Texas Government Code, as amended, with respect to any Personnel Appeals Board Hearing conducted pursuant to this Chapter.
    b) A Personnel Appeals Board Hearing shall commence and conclude in open session, and all final decisions of the Personnel Appeals Board shall be voted on in open session. For the purpose of this Chapter, "open session" means the portion of the Personnel Appeals Board Hearing that is conducted in a manner that is open to the public.
    c) The Personnel Appeals Board may conduct a hearing and deliberation in a closed session.
    d) At commencement of a Personnel Appeals Board Hearing, the Employee shall notify the Personnel Appeals Board of the Employee's election to have the hearing conducted in open session.
    e) If the Employee wishes for the Personnel Appeals Board's deliberation of the evidence presented at the hearing to occur in open session, the Employee shall object to the Personnel Appeals Board recessing to closed session following the announcement that the Board will recess to closed session.
    f) Upon receiving the Employee's objection pursuant to Section 1.o(3)(e), the Personnel Appeals Board shall not recess to closed session and said deliberation shall occur in open session.
    g) Notwithstanding the Employee's objection pursuant to Section 1.o(3)(e), the Personnel Appeals Board shall have the sole and absolute discretion to include any person in a closed session whose participation necessary to the matter under consideration.

4) Closed Session; Certified Agenda or Recording
    a) The Administrative Services Director shall keep a certified agenda or make a recording of a closed session held by the Personnel Appeals Board.
    b) A certified agenda of a closed session shall include the following:
        1. A statement of deliberation subject matter;
        2. A record of any action taken; and
        3. The date and time of the beginning and end of the closed session.
5) Determination of the Personnel Appeals Board
    a) The Personnel Appeals Board shall consider the evidence presented at the Personnel Appeal Board Hearing and make a determination as set forth in Section 1.k.5(a)i.
    b) The Personnel Appeals Board shall make its final determination by majority vote in open session following its deliberation of the evidence presented at the hearing. The decision of the Personnel Appeals Board shall be the final and cumulative determination of an Adverse Action matter.
6) Notice of Personnel Appeals Board Determination
    a) The Personnel Appeals Board's final determination shall uphold, modify, or reverse the Adverse Action.
    b) The Personnel Appeals Board shall issue a Notice of Personnel Appeals Board Determination to the Employee detailing said final determination, and issue a copy of the same to the Department Manager and the Administrative Services Director.
    c) The Notice of Personnel Appeals Board Determination shall be issued within three (3) Business Days following the adjournment of the Personnel Appeals Board Hearing.

p. Litigation; Judicial Review

The Employee who has exhausted all administrative remedies and appeals pursuant to this Chapter may file suit in a Midland County state district court.

1) A suit filed pursuant to this Section shall be by verified petition specifying the grounds of illegality regarding the final administrative decision. The verified petition shall be filed no later than the thirtieth (30th) day following the date on which the Employee has exhausted all administrative remedies and appeals pursuant to this Chapter.
2) A state district court shall confine its review of an action made pursuant to this Chapter to the City's record and any evidence of procedural errors alleged to have occurred by the Employee. In performing such review, a state district court shall apply the substantial evidence standard.
3) A state district court that reviews a final determination made pursuant to this Chapter shall not award any costs or attorney fees against the City.

Section 2 Lay-Off

a. Notwithstanding any contrary provision contained in this Chapter, a Department Manager is authorized to lay-off an Employee for reasons that include, but are not limited to, the following:
    1) Change in the Employee's job duties and/or functions;
    2) Change in the organizational structure of the City's administration; and
    3) Lack of funding for the Employee's position or other budgetary constraint.
b. If a Department Manager seeks to lay-off an Employee pursuant to Section 2.a, the Department Manager shall use reasonable efforts to give said Employee at least two (2) weeks' written notice when feasible; provided, however, that no such notice shall be due for the lay-off of a temporary or part-time worker.
c. An Employee that was previously laid off pursuant to Section 2.a and had satisfactory service while employed with the City shall be eligible for rehire upon the subsequent vacancy of a position for which such former employee is eligible.

Section 3 Exit Interview

Upon the request of a Department Manager or an Employee who is due to be laid off or terminated, an exit interview between the Department Manager or his/her designee and the Employee shall occur in the Administrative Services Office.

Section 4 Name-Clearing Hearing

Upon the finalization of any Termination and an Employee's exhaustion of all appeal procedures pursuant to this Chapter, the Employee shall be entitled to a Name-Clearing Hearing before the City Manager.

a. An Employee seeking a Name-Clearing Hearing shall submit a written request for such hearing to the Administrative Services Director.
b. Upon receipt of an Employee's request for a Name-Clearing Hearing, the Administrative Services Director shall deliver said written request to the City Manager within two (2) Business Days.
c. A Name-Clearing Hearing shall occur within ten (10) Business Days of the City Manager's receipt of the Employee's written request.
d. At the Name-Clearing Hearing, an Employee may address any allegation made by the City or its employees, agents, officials, Council or board members relating to said Employee's discharge.
e. Following the Name-Clearing Hearing, the City Manager may issue an exculpatory statement deemed to be just or necessary. If the City Manager issues an exculpatory statement, he/she shall cause said statement to be mailed to the Employee's address on file with the Administrative Services Department and place a copy in the Employee's personnel file. It shall be in the City Manager's sole and absolute discretion whether to issue an exculpatory statement.

Chapter IX

Grievance Procedure

Section 1 Policy

It is the policy of the City to treat all employees fairly and equitably. Any employee who feels aggrieved in his/her employment with the City has a right to present a grievance to appropriate management officials for prompt consideration. The filing of a grievance by an employee shall not reflect unfavorably on the employee's standing, and the employee should not fear reprisal or retaliation for utilizing the procedures below. For the purposes of this Chapter, capitalized terms used herein without definition shall have the meanings assigned in Chapter VIII.

Section 2 Definitions

a. "Grievance" means a formal complaint (and any relevant supporting documentation) raised by an Employee regarding an employment matter.

b. "Immediate Supervisor" means the person charged with the daily oversight and management of the Employee claiming a grievance.

Section 3 General Provisions

a. The City shall attempt to resolve a Grievance using reasonable efforts and due diligence with regard to the procedures prescribed by this Chapter. The time limits prescribed by Section 4 may be extended by mutual written agreement between the Employee and pertinent City representative.

b. The Supervisor's or Department Manager's failure to address a written Grievance in accordance with the procedures prescribed by Section 4 shall permit the Employee to proceed to the following Step and file the written Grievance with the Department Manager or City Manager, as applicable.

c. An Employee's failure to respond to a decision within the time limits specified in Section 4 shall be deemed to be an acceptance of said decision.

d. A Grievance shall be initiated within ten (10) Business Days of: (i) the date on which the matter that is the subject of the Grievance occurred, or (ii) the date on which the matter that is the subject of the Grievance became known to the Employee.

Section 4 Procedure

a. Informal Step: The Employee may discuss a Grievance with his/her Immediate Supervisor in an effort to resolve the matter informally.

b. Step 1:
   1) The Employee may file a written Grievance with his/her Immediate Supervisor and request a conference to occur within five (5) Business Days to discuss a formal resolution of the matter.
   2) Upon receipt of a written Grievance, the Immediate Supervisor shall either: (i) schedule a conference to discuss a formal resolution of the matter in accordance with Section 4.b(1); or (ii) take action that addresses the matter described in the written Grievance to the reasonable satisfaction of the Employee.

3) Following a conference to discuss a formal resolution of a Grievance, the Immediate Supervisor shall render a written decision regarding the Grievance within ten (10) Business Days.
4) Following an action taken by the Immediate Supervisor to address the matter described in the written Grievance, the Immediate Supervisor shall issue a memorandum that details the Immediate Supervisor's action.

c. Step 2:
1) If the Employee is not satisfied with the Immediate Supervisor's decision pursuant Section 4.b, the Employee may file the written Grievance with the Department Manager and request a conference to occur within five (5) Business Days to discuss a formal resolution of the matter. The Employee shall file the written Grievance within five (5) Business Days of the Employee's receipt of the Immediate Supervisor's decision.
2) Upon receipt of a written Grievance, the Department Manager shall either: (i) schedule a conference to discuss a formal resolution of the matter in accordance with Section 4.c(1); or (ii) take action that addresses the matter described in the written Grievance to the reasonable satisfaction of the Employee.
3) Following a conference to discuss a formal resolution of a Grievance, the Department Manager shall render a written decision regarding the Grievance within ten (10) Business Days.
4) Following an action taken by the Department Manager to address the matter described in the written Grievance, the Department Manager shall issue a memorandum that details the nature of the Department Manager's action.

d. Step 3:
1) If the Employee is not satisfied with the Department Manager's decision pursuant to Section 4.c, the Employee may file the written Grievance with the City Manager (through the Administrative Services Director) and request a conference to occur within ten (10) Business Days. The Employee shall file the written Grievance within five (5) Business Days of the Employee's receipt of the Department Manager's decision. The written Grievance shall contain all complaints and relevant facts that pertain to the matter described in the written Grievance.
2) Upon receipt of a written Grievance, the City Manager or his/her designee shall either: (i) schedule a conference to discuss a formal resolution of the matter in accordance with Section 4.d(1); or (ii) take action that addresses the matter described in the written Grievance to the reasonable satisfaction of the Employee.
3) Following a conference to discuss a formal resolution of a Grievance, the City Manager or his/her designee shall render a written decision regarding the Grievance within ten (10) Business Days.
4) Following an action taken by the City Manager or his/her designee to address the matter described in the written Grievance, the City Manager or his/her designee shall issue a memorandum that details the nature of the City Manager's or his/her designee's action.
5) A decision or action taken by the City Manager or his/her designee shall be final and satisfy the City's obligations regarding the consideration of the Grievance.

Section 5 Written Decisions and Memorandums

A written decision or memorandum issued pursuant to Section 4 shall be sent to the Employee, the Department Manager, and the Immediate Supervisor, as applicable. A copy of a written decision or memorandum issued pursuant to Section 4 shall be attached to a copy of the written Grievance and kept in the Employee's personnel file in the Administrative Services office.

Chapter X

Retirement System and Other Benefits

Section 1 Texas Municipal Retirement System

All regular employees are required as a condition of their continued employment to enroll in the Texas Municipal Retirement System. Seasonal, part-time, temporary, Fire Department employees and others exempt by State law, are not eligible to enroll in the retirement system, unless otherwise provided for herein or by State law.

a. Deposits. Each member of the retirement system shall, by payroll deduction, be required to contribute a percentage not to exceed seven percent (7%) of his monthly salary. The City shall also deposit a certain percentage for the benefit of each member employee as required by law.

b. Withdrawal of Deposits. If an employee leaves the service of the City for any reason, he may withdraw the deposits he has made plus any interest earned on such deposits.

c. Retirement Benefits and Restrictions. Benefits payable upon the death or retirement of an employee and any restrictions or limitations upon participation in the retirement system shall be in accordance with the provisions of the Texas Municipal Retirement System Act, Subtitle G of Title 8, Government Code.

Section 2 Firemen's Relief and Retirement

All employees of the regular City of Midland Fire Department shall be required as a condition of employment to participate in and make contributions to the Firemen's Relief and Retirement Fund. Contributions to and participation in the Firemen's Relief and Retirement Fund shall be in accordance with the provisions of Article 6243e, V.A.T.S.

Section 3 Federal Insurance Contributions Act

a. **Old-Age, Survivors, and Disability Insurance Tax (Social Security**)
All employees, except those who contribute to and participate in the Midland Firemen's Relief and Retirement Fund and others excluded by law, shall make contributions by payroll deductions to the Old-Age, Survivors, and Disability Insurance Tax (Social Security). All employees, upon commencement of employment with the City, must possess a Social Security Card.

b. **Medicare Tax**
All employees shall make contributions by payroll deductions to the Medicare Tax except those who are excluded by law.

Chapter XI

Safety

Section 1 General

These personnel rules are subject to modification when same are required to protect the safety or health of any employee. They are also subject to modification if same are necessary to comply with any state, federal, or local safety laws and regulations.

Section 2 Accident Review Board

The City Manager appoints the members of this Board with the Safety and Risk Manager as chairman. The primary function of the Board is to review all motor vehicle accidents and personal injuries occurring on the job. The Board shall consult with the administrative body of the City as well as Department/Division Managers, supervisory personnel, and other employees concerning the removal of hazardous conditions, disciplinary actions, and other improvements of the overall safety program. The Board shall not review any accident or personal injuries where a potential or existing claim or potential or existing lawsuit is pending against the City or a City employee.

Chapter XII

Employment at Will

Section 1 Council Appointees, Other Employees and Department Managers

a. When used in this Chapter, the following capitalized terms shall have the meanings set forth below:

"Council Appointees" shall mean City Manager, City Attorney, City Secretary, Municipal Court Presiding Judge, and Municipal Court Associate Judge.

"Department Managers" shall mean Director of Administrative Services, Director of Airports, Chief Information Officer, Director of Community Services, Director of Development Services, Director of Engineering Services, Director of Finance, Fire Chief, Director of General Services, Internal Auditor, Police Chief, Director of Solid Waste Management, and Director of Utilities, and any other department manager approved by the City Council.

"Other Employees" shall mean Deputy City Manager, Assistant City Manager, and First Assistant City Attorney.

b. All Council Appointees, Other Employees, and Department Managers shall be **EMPLOYEES AT WILL** and may be terminated at any time by the City of Midland with or without cause, subject to the City's personnel policies and procedures, and the terms and conditions of any applicable employment agreement.

c. In the event of an Involuntary Separation (as defined in this Chapter), a Council Appointee shall be entitled to receive a lump sum payment equal to six (6) months of his or her annual base salary as well as any other severance or separation compensation payment(s) set forth in his or her employment agreement. An Other Employee or a Department Manager shall be entitled to receive a lump sum payment equal to six (6) months of his or her annual base salary.

Notwithstanding any contrary provision of this Chapter, the City shall have no obligation to pay the severance sum(s) set forth herein if a Council Appointee, Other Employee or Department Manager is terminated for one of the following reasons: (i) conviction of a felony; (ii) conviction of a misdemeanor involving moral turpitude (which shall mean a misdemeanor involving dishonesty, fraud or deceit); or (iii) misconduct or violation of a City policy, rule, or regulation that by its nature has an adverse effect on the City, the confidence of the public in the integrity of the City, or the relationship of the employee and other employees (a *"Policy Violation"*). The determination of whether conduct constitutes a Policy Violation shall be in the sole discretion of the City Council for Council Appointees, the City Manager for a Deputy City Manager, an Assistant City Manager, or a Department Manager, and the City Attorney for the First Assistant City Attorney.

"Involuntary Separation" as used in this Chapter shall have the following meaning:

1) Resignation of a Department Manager or Other Employee within sixty (60) days following a reduction in salary in a greater percentage than an applicable across-the-board reduction for all City employees;

2) Termination of a Department Manager, a Deputy City Manager, or an Assistant CityManager by the City Manager;

3) Termination of the First Assistant City Attorney by the City Attorney; or

4) Termination of a Council Appointee by a vote of at least four (4) City Council members ata regular City Council meeting; or

5) Termination of a Department Manager, Other Employee or Council Appointee for a reason set forth in such employee's employment agreement with the City in accordancewith the terms and conditions of such employment agreement.

d. A Council Appointee shall enter into an employment agreement to be approved by the City Council. A Deputy City Manager shall enter into an employment agreement to be approved by theCity Manager. An Assistant City Manager shall enter into an employment agreement to be approved by the City Manager. The First Assistant City Attorney shall enter into an employment agreement to be approved by the City Attorney. A Department Manager shall enter into an employment agreement to be approved by the City Manager. In the event that any conflict exists between a provision of this Chapter and a provision of any such employment agreement, then theprovision of the employment agreement shall apply and take precedence over the conflicting provision contained in this Chapter.

e. A City employee deemed to be an exempt employee under the Fair Labor Standards Act shall only be suspended for period of at least one (1) week; provided, however, that a suspension of anexempt employee in good faith for an infraction(s) of a safety rule(s) of major significance may befor a period of less than one (1) week. This subsection shall be construed, interpreted, and administered in accordance with the Fair Labor Standards Act, as amended.

Section 2 Applicability

These rules, policies and procedures shall apply to and govern all employees of the City of Midland, expect when these rules affecting firefighters and police officers are inconsistent with State legislation. Words usedin the singular shall be construed to read in the plural and words used in the masculine gender shall be construed to read in the feminine. Failure to comply with these policies may result in disciplinary action being taken against an employee. Nothing in these rules, policies and procedures, except Chapter XII, should be construed as an employment agreement, guarantee of or contract for continued benefits from oremployment by the City of Midland. Severance as defined in these rules and policies shall mean salary and all other compensation and benefits. Severance shall be paid in a lump sum upon involuntary separation. The Mayor shall have the authority to execute and approve amendments and modifications to employment agreements entered into under Chapter XII. The standard for compliance by the City with these personnel policies, rules or procedures shall be substantial compliance. A violation of or failure to follow any rule or procedure shall not form a basis for any civil or criminal action against the City or any employee or official of the City who is acting on behalf of the City except as authorized by Sections 271.151 through 271.160 of the Texas Local Government Code, as amended. The administrative remedy set out in these rules and procedures is the exclusive remedy. There shall be no appeal to or action in any court except on constitutional or statutory grounds. These personnel rules, policies and procedures shall be implemented, administered and construed to comply with applicable local, state and federal laws. That the term Other Employees or Other Employee as used in these policies shall only mean the Deputy City Manager, Assistant City Manager and First Assistant City Attorney. That Chapter XII and its related definitions, and its related essential terms and benefits are a contract for providing services as authorized by Sections 271.151 through 271.160 of the Texas Local Government Code, as amended. The testing of employees conducted in conjunction with the administration and enforcement of the City's drug and alcohol testing policy shall be conducted in accordance with the United States Constitution, the Texas Constitution, federal and state laws, and regulations and judicial precedent. Except as outlined in Chapter XII, an

employee's at-will employment status is not modified by these policies and the Midland City Council reserves the right to amend these personnel policies in accordance with applicable statutes. As used in these rules and policies, Council Appointees shall mean the City Manager, City Attorney, City Secretary, the Presiding Municipal Court Judge and the Associate Municipal Court Judge. It is not required that employee sign these rules, policies and procedures, or any other document, in order to be bound by said rules, policies and procedures. Each employee shall be bound by these rules, policies and procedures by accepting employment with the City of Midland and performance of his or her job duties.

City Council Meeting

Item Number: 9

Meeting Date: July 11, 2023

To: City Council / City Manager

From: Justine Ruff, Director

Subject: **Motion approving the plans and specifications for the MAF Northwest Basin Wildlife Improvements Project, said plans and specifications being on file in the City Secretary's office referenced by the number and date of this motion, and authorizing the Interim City Manager or the Interim City Manager's designee to advertise for competitive bids for said project pursuant to the statutes of the State of Texas for accomplishing the work set forth in said plans and specifications (DISTRICT 4) (AIRPORTS)**

Purpose:

Motion approving the plans and specifications for the MAF Northwest Basin Wildlife Improvements Project, said plans and specifications being on file in the City Secretary's office referenced by the number and date of this motion, and to authorize the Interim City Manager or the Interim City Manager's designee to advertise for competitive bids for said project pursuant to the statues of the State of Texas for accomplishing the work set forth in said plans and specifications.

Recommended City Council Action:

Approve

Fiscal Impact:

To Be Determined

Discussion:

In Amendment #9 to the Airport's 2016 Agreement with Parkhill, Smith & Cooper, the MAF Northwest Basin Wildlife Improvements Project (700243) was added to the agreement. This project addresses the existing storm drainage basin located on the northwest side of the Airport.

In the last few years there has been a lot of vegetation growth in the basin that has attracted wildlife and made mowing/maintenance impossible. As a result of this, the Airport staff has not been able to mow the vegetation to the height recommended in the Wildlife Hazard Management Plan. This project will grade and shape the basin to allow the ability to mow vegetation growth that occurs. An access ramp to the bottom of the basin will be constructed that will allow equipment to access the area for mowing or grading. The size of the basin will not be increased other than to provide side slopes that can be maintained and the vegetation growth controlled. This project will be included in FAA Grant #70 and the grant will cover 90% of the expenses of construction of the project. The project is being bid at this time as the FAA has requested that we have “bids in hand” when the Grant is funded.

Tina Gaug

City Manager’s Office

Parkhill

PROJECT MANUAL

MIDLAND INTERNATIONAL AIR & SPACE PORT (MAF)

Northwest Basin Wildlife Improvements

Midland, Texas



June | 2023

Parkhill Project #01976818

Parkhill

PROJECT MANUAL

MIDLAND INTERNATIONAL AIR & SPACE PORT (MAF)

Northwest Basin Wildlife Improvements

Midland, Texas

Midland International Air & Space Port

PARKHILL SMITH & COOPER, INC. F-560
STATE OF TEXAS
MICHAEL KRUSING
111822
LICENSED PROFESSIONAL ENGINEER
06/26/2023

June | 2023

Parkhill Project #01976818

PACKET 9.4 July 11, 2023

TABLE OF CONTENTS

ADVERTISEMENT FOR BIDS..... A
INSTRUCTIONS TO BIDDERS.....IB
BID BOND.....BB
PROPOSAL..... C
CONTRACT..... D
PERFORMANCE BOND .....E
PAYMENT BOND .....F
CERTIFICATE OF INSURANCE..... G
EXPERIENCE RECORD ..... H
EQUIPMENT SCHEDULE I

Contract Assurance
Prompt Payment
City of Midland Department of Airports - DBE Policy Statement
Bidder Information Sheet

SPECIAL PROVISIONS

Article	Title
SP-1	Scope of Work
SP-2	Contract Documents
SP-3	Time and Order of Completion
SP-4	Limitation of Operation
SP-5	Construction Activity
SP-6	Affidavit of Bills Paid
SP-7	Calendar Day
SP-8	Protection of Property
SP-9	Electric Power and Natural Gas
SP-10	Lines and Grades
SP-11	Water for Construction
SP-12	Material Tests
SP-13	Barricades, Signs, and Hazard Markings
SP-14	Prevention of Air and Water Pollution
SP-15	Public Convenience and Safety
SP-16	Final Cleaning
SP-17	Insurance
SP-18	Removal and Disposal of Structures, Utilities, and Obstructions
SP-19	Conformity with Plans and Allowable Deviations
SP-20	Removal of Defective and Unauthorized Work
SP-21	Disputed Claims for Extra Work
SP-22	Federal Participation
SP-23	Indemnification
SP-24	Contractor Responsibility for Work
SP-25	Correction of Faulty Work after Final Payment
SP-26	Texas State Sales Tax
SP-27	Separate Contracts
SP-28	Trench Safety
SP-29	Load Restrictions
SP-30	Notice to Proceed
SP-31	Payment for Materials on Hand

SP-32	Weighing and Measuring Equipment
SP-33	Progress Schedule
SP-34	Average Climatic Range
SP-35	Substantially Complete
SP-36	Submittals
SP-37	Geotechnical Information
SP-38	Sovereign Immunity
SP-39	Governing Law and Venue
SP-40	Third-Party Beneficiary
SP-41	Releases
SP-42	Independent Contractor
SP-43	Notice of Alleged Breach; Statutory Prerequisites
SP-44	Assignment
SP-45	Waiver of Attorney Fees
SP-46	Prompt Pay Act
SP-47	Payment
SP-48	Project Closeout
SP-49	Disclosure of Interested Parties
SP-50	Parkhill/RPR Authority and Duty
SP-51	Anti-Boycott Statutes

GENERAL CONDITIONS OF THE CONTRACT

Article	Title
GC-01.	Owner
GC-02.	Contractor
GC-03.	Architect/Engineer
GC-04.	Contract Documents
GC-05.	Subcontractor
GC-06.	Written Notice
GC-07.	Work
GC-08.	Deleted
GC-09.	Deleted
GC-10.	Layout of Work
GC-11.	Architect/Engineer Authority and Duty
GC-12.	Superintendence and Project Representation
GC-13.	Contractor Duty and Superintendence
GC-14.	Contractor Understanding
GC-15.	Character of Workers
GC-16.	Contractor Buildings
GC-17.	Sanitation
GC-18.	Shop Drawings
GC-19.	Preliminary Approval
GC-20.	Defects and Remedies
GC-21.	Changes and Alterations
GC-22.	Right of Architect/Engineer to Modify Methods and Equipment
GC-23.	Keeping Plans and Specifications Accessible
GC-24.	Ownership of Drawings
GC-25.	Adequacy of Design
GC-26.	Right of Entry

GC-27.	Collateral Contracts
GC-28.	Discrepancies and Omissions
GC-29.	Deleted
GC-30.	Protection Against Accident to Employees and the Public
GC-31.	Contractor Insurance
GC-32.	Time for Completion and Liquidated Damages
GC-33.	Price for Work
GC-34.	Bonds
GC-35.	Losses from Natural Causes
GC-36.	Protection of Adjoining Property
GC-37.	Protection Against Subcontractor, Laborer, Materialmen and Furnisher of Machinery, Equipment, and Supply Claims
GC-38.	Protection Against Royalties or Patented Invention
GC-39.	Laws and Ordinances
GC-40.	Assignment and Subletting
GC-41.	Time and Order of Completion
GC-42.	Extension of Time
GC-43.	Hindrances and Delays
GC-44.	Quantities and Measurements
GC-45.	Estimated Quantities
GC-46.	Partial Payments
GC-47.	Use of Completed Portions
GC-48.	Final Completion and Acceptance
GC-49.	Final Payment
GC-50.	Payment Withheld
GC-51.	Delayed Payments
GC-52.	Extra Work
GC-53.	Time of Filing Claims
GC-54.	Deleted
GC-55.	Abandonment by Contractor
GC-56.	Abandonment by Owner

CONTRACT PROVISION GUIDELINES FOR OBLIGATED SPONSOR AND AIRPORT IMPROVEMENT PROGRAM PROJECTS

Wage Rates

FAA AC 150/5370-10H

PART 1 – GENERAL CONTRACT PROVISIONS
Section 10 Definition of Terms
Section 20 Proposal Requirements and Conditions
Section 30 Award and Execution of Contract
Section 40 Scope of Work
Section 50 Control of Work
Section 60 Control of Materials
Section 70 Legal Regulations and Responsibility to Public
Section 80 Execution and Progress
Section 90 Measurement and Payment

PART 2 – GENERAL CONSTRUCTION ITEMS
Item C-100 Contractor Quality Control Program (CQCP)
Item C-102 Temporary Air and Water Pollution, Soil Erosion, and Siltation Control
Item C-105 Mobilization

PART 3 – SITEWORK

Item P-151 Clearing and Grubbing
Item P-152 Excavation, Subgrade, and Embankment

PART 9– MISCELLANEOUS
Item P-605 Joint Sealants for Pavements
Item P-610 Concrete for Miscellaneous Structures

PART 12 – TURFING
Item T-901 Seeding
Item T-905 Topsoil
Item MC – Rock Riprap and Filter Fabric

TXDOT STANDARD SPECIFICATIONS

200 ITEMS – SUBGRADE TREATMENTS AND BASE
Item 247 Flexible Base

APPENDICES

APPENDIX A – CONSTRUCTION SAFETY AND PHASING PLAN (CSPP)
APPENDIX B – CONSTRUCTION MANAGEMENT PLAN (CMP)

ADVERTISEMENT FOR BIDS
NOTICE TO BIDDERS

Sealed proposals addressed to the City Secretary will be received at the office of the City Secretary, City Hall, Midland, Texas until 3:00 p.m., Wednesday, August 9, 2023, for furnishing all necessary materials, machinery, equipment, superintendence, and labor for constructing certain improvements at Midland International Air & Space Port (MAF), Midland, Texas. These improvements are contained in Plans and Specifications entitled, "Midland International Air & Space Port, Northwest Basin Wildlife Improvements," dated June 2023.

Immediately following the closing time for receipt of Bids/Proposals will be publicly opened and read aloud. Any Bid received after closing time will be returned unopened.

Principal items of Work are set forth in specific detail in the Proposal Section of these Specifications; however, Work items may be generally described as regrading of an existing basin to designed slopes, construction of new drainage flumes, and new concrete access to basin floor.

Work will also include other miscellaneous materials, equipment, machinery, superintendence, and labor for constructing these improvements for MAF, Midland, Texas.

A Bid Proposal guaranty is to accompany the Bid, thereby guaranteeing the good faith of the Bidder and that Bidder will enter the written contract. The guaranty is to amount to 5 percent of the total bid and must be in the form of cash or certified check, issued by a bank satisfactory to the City of Midland, or a bid bond.

Bidders are expected to inspect site of work and inform themselves regarding all local conditions.

In all areas of employment, women will be afforded equal opportunity for employment. Employment of women shall not diminish the standards or requirements for employment of minorities.

This project is subject to Minority Business Enterprise Contract Provisions, Foreign Trade Restrictions, Federal Debarment and Suspension, Drug-free Workplace, and other requirements stated in the Instructions to Bidders and other sections of project specifications and contract documents.

Policy. It is the policy of the Department of Transportation (DOT) that disadvantaged business enterprises as defined in 49 CFR Part 26 shall have maximum opportunity to participate in performance of contracts financed in whole or in part with Federal funds.

Buy American Provision. Proposed contract is subject to the Buy American Provision under Section 9129 of the Aviation Safety and Capacity Expansion Act of 1990. Details of such requirement are contained in Specifications.

MAF treats Bidder/Offer compliance with good faith effort requirements as a matter of responsiveness.

Requirements of 49 CFR Part 26, Regulations of the U.S. Department of Transportation, apply to this Contract. It is the policy of MAF to practice nondiscrimination based on race, color, sex, or national origin in award or performance of this contract. All firms qualifying under this solicitation are encouraged to submit Bids/Proposals. Award of this Contract will be conditioned upon satisfying requirements of this bid Specification. These requirements apply to all Bidders/Offerors, including those who qualify as a DBE. DBE contract goal of 9.8 percent has been established for this Contract. Bidder/Offeror shall make good

faith efforts, as defined in Appendix A, 49 CFR Part 26, to meet contract goal for DBE participation in performance of this contract.

Successful Bidder/Offeror will be required to submit the following information:

(1) names and addresses of DBE firms that will participate in Contract;
(2) description of work each DBE firm will perform;
(3) dollar amount of participation of each DBE firm participating;
(4) written documentation of Bidder/Offeror commitment to use a DBE subcontractor whose participation submits to meet contract goal;
(5) written confirmation from DBE of participation in Contract as provided in commitment made under (4); and
(6) if contract goal is not met, evidence of good faith efforts.

Successful Bidder or Offeror must provide written confirmation of participation from each DBE firm the Bidder/Offeror lists in their commitment. Bidder/Offeror must submit DBE written confirmation of participation within five days of receiving Owner notice to successful Bidder.

Information for Bidders, Proposal forms, Specifications, and Plans are on file in the office of the Director of Airports, MAF.

Downloaded documents (PDF file extension format) can be obtained from the PSC Info Exchange website after registering as a plan holder with Parkhill via https://parkhill.com/projects-for-bid/ or by contacting Debbie German, Project Assistant, at dagerman@parkhill.com. No cost or deposit required for downloaded documents.

CITY OF MIDLAND, TEXAS
Marcia Bentley-German, City Secretary

INSTRUCTIONS TO BIDDERS

IB-1. BID FORMS

Bid shall be submitted on Proposal form in the bound Specifications.

In addition to the completed Proposals, bid forms shall include Bid Security, Financial Statement, and other specified documents. Failure to submit a complete Bid as specified will be considered as sufficient cause for rejection of the Bid.

IB-2. PREPARATION OF PROPOSALS

All blanks in the forms shall be filled in or marked "N.A." (Not Applicable) and all required information shall be included with Proposals. Bid prices shall be written in ink. Receipt of all addenda issued shall be acknowledged in the space provided on the addendum. Each addendum received and the Bid Security shall be enclosed with Proposal. Proposal and accompanying documents shall be enclosed in a sealed envelope, addressed to the City Secretary, 300 N. Loraine, Midland, Texas 79701, marked "MAF Northwest Basin Wildlife Improvements" with name and address of Bidder also shown thereon. **If Sealed Bid is sent in a mailing envelope, outside of mailing envelope must also have same marking visible.**

IB-3. EXPERIENCE RECORD AND FINANCIAL STATEMENT

Experience Record included herein, shall be filled in, showing completed jobs, of a similar nature to the one covered by Proposal, and work in progress with contract and bond amounts and percent complete.

A sworn statement of the current financial condition of Bidder shall also be enclosed with Proposal, to provide Owner with information relative to the responsibility of bidders and their ability to finance and construct the work. This statement shall be enclosed with Proposal in a separate envelope and will be returned to Bidder upon return of his bid security.

TxDOT prequalification can be submitted in lieu of a financial statement with bids; however, financial information may be required of the apparent low Bidder.

IB-4. BID SECURITY

Each proposal must be accompanied by a Bid Bond, Certified Check, or cash in the amount of not less than 5 percent of the maximum bid submitted, payable without recourse to the City of Midland, Texas. If a Bid Bond is submitted as bid security, it shall be executed by an approved surety company authorized to do business in the State of Texas and accepted according to the latest list of companies holding certificates of authority from the Secretary of the Treasury of the United States of America. Such bid security shall be so conditioned if Bidder is awarded Contract and unable or fails to furnish performance and payment bonds and execute Contract within 10 days after date of award, security shall revert to Owner as compensation for damages which Owner suffers because of such failure by Bidder.

IB-5. PERFORMANCE AND PAYMENT BONDS

With execution and delivery of the contract documents, Contractor shall furnish, on the forms provided herein, bonds, as required by the General Conditions, of 100 percent of the total contract price, executed by an approved surety company authorized to do business in the State of Texas, and accepted according to the latest list of companies holding certificates of authority from the Secretary of the Treasury of the United States of America. Performance and Payment Bonds submitted shall be in compliance with Chapter 2253 of the Texas Government Code.

IB-6. INTERPRETATION OF BIDS

No bid will be considered which fails to supply all information indicated, or which has any limitation or provisions placed upon it by Bidder. In case of a difference between the written words and the figures in Proposal, amount stated in written words will be considered as bid price, without recourse on the part of Contractor. In case of ambiguity or lack of clearness in Proposal, Owner will adopt the most advantageous construction thereof or reject the bid. Owner reserves the right to accept or reject any or all bids, if it is deemed to be in the best interest of the public. Further, Owner reserves the right to reject any bids because of irregularity or to waive such irregularity if such action is in the public interest.

IB-7. DISPOSITION OF BIDS

Owner expects to make award of the contracts as soon as possible after the opening of bids, but specifically reserves the right to hold all Proposals for a period not to exceed 90 days, before making an award. No Proposal, having been opened, may be withdrawn prior to expiration of this 90-day period. Bid security of all but the successful Bidder will be returned upon making an award.

Contract will be awarded to the responsible bidder submitting the lowest bid complying with the conditions of the Advertisement for Bidders and the Instructions to Bidders.

IB-8. EXAMINATION OF SITE, PLANS, AND SPECIFICATIONS

Before submitting Proposal, each Bidder shall have made a thorough examination of the site of work and of the plans and specifications, and shall become informed as to the location and nature of the proposed construction, labor conditions and all other matters that may affect the cost and time of completion of the work upon which he bids. Bidders shall make such investigations of the nature of the project as deemed necessary and shall assume all responsibility for fully informing themselves of the character of materials which will be encountered. Submission of a Proposal shall be prima facie evidence that Bidder has made such an examination. Contact Chris Welch, Airport Facilities Manager (432.560.2200), to schedule a site examination visit.

IB-9. PREBID CONFERENCE

A prebid conference will be held at 1:30 p.m., Tuesday, July 25, 2023, in the Conference Room at Midland International Air & Space Port (MAF). At this time, all interested bidders will be requested to appear and present any questions they may have pertaining to this project. All bidders are urged to attend prebid conference because they will be charged with notice of the matters discussed therein. Attendance to the prebid conference is NOT mandatory.

IB-10. INTERPRETATION OF SPECIFICATIONS PRIOR TO BIDDING

Any questions arising during the advertising period as to the meaning or intent of the specifications will be answered by an addendum which will be sent to all who have placed a deposit and/or furnished plans and Contract documents issued by Parkhill. Engineer shall receive requests for clarifications to specifications and plans at least three days prior to the date for receipt of bids.

Receipt of each addendum shall be acknowledged by Bidder in the space provided and each addendum shall be enclosed with Proposal when it is submitted. All addenda shall become a part of these contract documents.

IB-11. AVAILABILITY OF PLANS

A. For Bidders

All parties with an interest in the type of work included in the project covered by these documents, shall be given a reasonable opportunity to examine the documents and prepare a bid or sub-bid. Documents may be examined without charge as noted in the Notice to Bidders.

Downloadable documents (PDF file extension format) can be obtained from the PSC Info Exchange website after registering as a plan holder with Parkhill via https://parkhill.com/projects-for-bid/ or through Debbie German, Project Assistant, at dagerman@parkhillcom. No cost or deposit required for downloaded documents.

B. For Contractor

Contractor will be furnished five sets of specifications and plans for his use during construction. This shall include all plans and specifications furnished to material suppliers and subcontractors but does not include the executed contract copies. Plans and specifications for use during construction will be furnished directly only to Contractor. Contractor shall then distribute copies of plans and specifications to suppliers, subcontractors, or others, as required for proper execution of the work.

Should additional sets of documents be desired, they may be purchased, by Contractor only, at the following prices, exclusive of postage or freight charges:

Plans and Specifications are $150.00 per set.

IB-12. SPECIAL PROVISIONS

Attention of Bidders is directed to SPECIAL PROVISIONS included in these documents for requirements concerning scope of work, labor, insurance, and similar subjects.

IB-13. PLANT LOCATION AND STORAGE AREA

Contractors bidding on the work included in this contract who desire to locate a material storage area or other similar facility on the airport property may secure such site, buildings, or areas by direct negotiation with the Director of Airports, MAF, Midland, Texas. An area located adjacent to the Project area will be identified as available for use by Contractor for staging and material storage.

IB-14. WITHDRAWAL OF PROPOSALS

Any Bidder, upon his or his authorized representative's written request, will be given permission to withdraw his Proposal not later than the time set for opening thereof. At the time of opening of Proposals, when such Proposal is reached, it will be returned to him unread.

IB-15. DISQUALIFICATION OF BIDDERS

Any one or more of the following causes may be considered as sufficient for the disqualification of bidder and the rejection of his bid or bids:

More than one Proposal for the same work from an individual firm, partnership, or corporation under the same or different name.

Evidence of collusion among bidders. Participants in such collusion may not receive recognition as Bidders for any future work.

Unbalanced Proposals in which the prices for some items are out of proportion to the prices for other items.

Failure to submit a unit price for each item of work for which a bid price is required by Proposal.

Lack of competency as revealed by the financial statement submitted.

Lack of responsibility as shown by past work judged from workmanship and progress standpoints.

Uncompleted work which, in the judgment of Owner, might hinder or prevent the prompt completion of additional work if awarded.

For being in arrears on existing contracts, in litigation with Owner, or having defaulted on a previous contract.

IB-16. MATERIAL GUARANTY

Before any contract is awarded, Bidder may be required to furnish a complete statement of origin, composition, or manufacture of any or all materials proposed to be used in the construction of the work, together with samples, which may be subjected to the tests provided for in these specifications to determine their quality and fitness for the work.

IB-17. DISADVANTAGED BUSINESS ENTERPRISE CONTRACT PROVISIONS

It is the policy of the Department of Transportation (DOT) that disadvantaged business enterprises as defined in 49 CFR Part 26 shall have the maximum opportunity to participate in the performance of contracts financed in whole or in part with Federal funds under this agreement. Consequently, Bidder will be required to conform to the DBE requirements of 49 CFR Part 26.

IB-18. WAIVER

BY SUBMITTING A BID, EACH BIDDER AGREES TO AND DOES HEREBY WAIVE ANY CLAIM BIDDER HAS OR MAY HAVE AGAINST THE CITY OF MIDLAND, TEXAS, AND CITY EMPLOYEES, AGENTS, AND OFFICERS ARISING OUT OF OR IN ANY WAY CONNECTED WITH THE FOLLOWING:

1. ADMINISTRATION, EVALUATION, OR RECOMMENDATION OF ANY BID;
2. WAIVER OR DELETION OF ANY REQUIREMENT UNDER BID DOCUMENTS OR CONTRACT DOCUMENTS;
3. ACCEPTANCE OR REJECTION OF ANY BIDS; AND
4. AWARD OF CONTRACT.

BY SUBMITTING A BID, BIDDER ACKNOWLEDGES AN UNDERSTANDING OF ALL BIDDING DOCUMENT TERMS AND CONSENTS TO BIDDING PROCESS AND THE POSSIBILITY OF A NEGATIVE ASSESSMENT. BY SUBMITTING A BID, BIDDER ACKNOWLEDGES AND AGREES THAT THERE WAS/IS NO DISPARITY OF BARGAINING POWER BETWEEN BIDDER AND THE CITY OF MIDLAND, TEXAS.

BIDDER AGREES THIS IS THE INTENTIONAL RELINQUISHMENT OF THE LISTED PRESENTLY EXISTING KNOWN RIGHTS.

IB-19. WAIVER OF ATTORNEY FEES

BY EXECUTING THIS CONTRACT, CONTRACTOR AGREES TO WAIVE AND DOES HEREBY KNOWINGLY, CONCLUSIVELY, VOLUNTARILY AND INTENTIONALLY WAIVE ANY CLAIM IT HAS/MAY HAVE IN THE FUTURE AGAINST OWNER, REGARDING AWARD OF ATTORNEY FEES, WHICH ARE IN ANY WAY RELATED TO CONTRACT, OR CONSTRUCTION, INTERPRETATION OR BREACH OF CONTRACT. CONTRACTOR SPECIFICALLY AGREES IF CONTRACTOR BRINGS/COMMENCES ANY LEGAL ACTION OR PROCEEDING RELATED TO THIS CONTRACT, CONSTRUCTION, INTERPRETATION, VALIDITY, OR BREACH OF CONTRACT, INCLUDING BUT NOT LIMITED TO ANY ACTION PURSUANT TO PROVISIONS OF THE TEXAS UNIFORM DECLARATORY JUDGMENTS ACT (TEXAS CIVIL PRACTICE AND REMEDIES CODE SECTION 37.001, ET. SEQ., AS AMENDED), OR CHAPTER 271 OF THE TEXAS LOCAL GOVERNMENT CODE, CONTRACTOR AGREES TO ABANDON, WAIVE, AND RELINQUISH ANY AND ALL RIGHTS TO RECOVERY OF ATTORNEY FEES TO WHICH CONTRACTOR MIGHT OTHERWISE BE ENTITLED.

CONTRACTOR AGREES THIS IS VOLUNTARY AND INTENTIONAL RELINQUISHMENT AND ABANDONMENT OF A PRESENTLY EXISTING KNOWN RIGHT. CONTRACTOR ACKNOWLEDGES AN UNDERSTANDING OF ALL TERMS AND CONDITIONS OF CONTRACT. CONTRACTOR FURTHER ACKNOWLEDGES AND AGREES THAT WAS/IS NO DISPARITY OF BARGAINING POWER BETWEEN OWNER AND CONTRACTOR.

THIS SECTION SHALL NOT BE CONSTRUED OR INTERPRETED AS A WAIVER OF SOVEREIGN IMMUNITY.

CONTRACTOR AND OWNER ARE RELYING ON THEIR OWN JUDGMENT. EACH PARTY HAD THE OPPORTUNITY TO DISCUSS THIS CONTRACT WITH COMPETENT LEGAL COUNSEL PRIOR TO ITS EXECUTION.

BID BOND

THE STATE OF TEXAS)

SURETY'S NO._____

COUNTY OF MIDLAND)

KNOWN ALL MEN BY THESE PRESENTS, THAT_____

_____(hereinafter called "Principal"), as Principal, and_____

_____ (hereinafter called "Surety"), as Surety, are held and firmly bound unto the City of Midland, a home rule municipal corporation of Midland County (hereinafter called "Obligee"), in the amount of_____

_____DOLLARS ($____), for payment whereof said Principal and Surety bind themselves and their heirs, administrators, executors, successors and assigns, jointly and severally, firmly by these presents.

WHEREAS, Principal submitted a Bid or Proposal to enter a certain written contract with Obligee to perform all work associated with the Northwest Basin Wildlife Improvements project.

NOW, THEREFORE, THE CONDITION OF THIS OBLIGATION IS SUCH, if said Principal shall faithfully, enter such written Contract, then this obligation shall be void; otherwise to remain in full force and effect.

IT IS EXPRESSLY UNDERSTOOD AND AGREED if said Principal should withdraw its Bid any time after such Bid is opened and before official rejection of such Bid or, if successful in securing the award thereof, said Principal should fail to enter into the Contract and furnish satisfactory Performance Bond and Payment Bond, Obligee, in either of such events, shall be entitled and hereby given the right to collect this Bid Bond as liquidated damages.

PROVIDED further if any legal action be filed upon this Bond venue shall lie in Midland County, Texas.

IN WITNESS WHEREOF, the said Principal and Surety do sign and seal this instrument, this day of _____, 20___.

_____ _____

Surety

By _____ By _____

Address _____ Address _____

_____ _____

APPROVED AS TO FORM:

_____

City Attorney

NOTE: Attach Power of Attorney

PROPOSAL

TO: The Mayor and City Council
City of Midland
Midland, Texas

Date: _____

Gentlemen:

Pursuant to foregoing Notice to Bidders, undersigned Bidder hereby proposes to do all work and furnish all necessary superintendence, labor, machinery, equipment, tools, and materials, and anything necessary to complete all work bid, as provided by attached Specifications and shown on Plans, and is bound to acceptance of this Proposal to execute Contract and Bonds per accompanying forms, performing and completing work within time stated, and furnishing all required guarantees, for the following prices to-wit:

□□RTHWEST BASI□ WI□D□IFE I□PR□VE□E□TS

Item	Quantity Unit	Description of Item and Unit Prices	Total Amount
1	1 LS	Item C-100, Contractor Quality Control Program (CQCP), complete, per lump sum: _____Dollars and _____Cents ($_____)	$_____
2	380 LF	Item C-102, Installation and Removal of Silt Fence, complete, per linear foot: _____Dollars and _____Cents ($_____)	$_____
3	1 LS	Item C-105, Mobilization, complete, per lump sum: _____Dollars and _____Cents ($_____)	$_____
4	27,900 SY	Item P-151, Clearing and Grubbing, complete, per square yard: _____Dollars and _____Cents ($_____ _____)	$_____
5	11,500 CY	Item P-152, Unclassified Excavation, complete, per cubic yard: _____Dollars and _____Cents ($_____ _____)	$_____

Item	Quantity Unit	Description of Item and Unit Prices	Total Amount
6	11,000 CY	Item P-152, Embankment, complete, per cubic yard: _____Dollars and _____Cents ($_____ _____)	$_____
7	1,040 SY	Item P-152, Grading and Subgrade Preparation Under Concrete, 6-inch Thickness, complete, per square yard: _____Dollars and _____Cents ($_____ _____)	$_____
8	240 SY	Item P-610, Concrete Drainage Flume, 4-inch Thickness, complete, per square yard: _____Dollars and _____Cents ($_____ _____)	$_____
9	600 SY	Item P-610, Concrete Entrance Road, 6-inch Thickness, complete, per square yard: _____Dollars and _____Cents ($_____ _____)	$_____
10	6 AC	Item T-901, Seeding by Wet Method, complete, per acre: _____Dollars and _____Cents ($_____ _____)	$_____
11	3,100 CY	Item T-905, Topsoil, Furnished from Off Site, complete, per cubic yard: _____Dollars and _____Cents ($_____ _____)	$_____
12	310 SF	Item MC, Rock Riprap and Filter Fabric, complete, per square foot: _____Dollars and _____Cents ($_____ _____)	$_____

Item	Quantity Unit	Description of Item and Unit Prices	Total Amount
13	1,040 SY	TxDOT Item 247 Flexible Base, Grade 1-2 Type C, 6-inch Thickness, complete, per square yard: _____Dollars and _____Cents ($_____ _____)	$_____

TOTAL BID	

Bidder is required to separate cost of materials to be incorporated into this Project. Such material costs are separated from other costs, so Bidder is a seller of such materials to the City. Bidder shall be required to issue a resale certificate on such materials in lieu of paying sales tax on such materials at time of purchase. The City will provide successful Bidder with a sales tax exemption certificate for such materials. Labor and materials charge shall be separated as follows:

BID

MATERIALS $_____

LABOR $_____

TOTAL BID **$_____**

Undersigned Bidder hereby confirms he has visited the Site of the Work and has carefully examined Plans, Specifications, and Contract Documents pertaining to Work covered by this Bid, and prices bid herein are based on minimum wage rates included in Specifications.

Bidder certifies, by submission of this Proposal or acceptance of this Contract, neither Bidder nor Bidder's principals are presently debarred, suspended, proposed for debarment, declared ineligible, or voluntary excluded from participation in this transaction by any Federal department or agency. Bidder further agrees by submitting this Proposal, Bidder will include this clause without modification in all lower tier transactions, solicitations, proposals, contracts, and subcontracts. Where Bidder or any lower tier participant is unable to certify to this statement, it shall attach an explanation to this proposal.

Contractor or subcontractor, by submission of offer/execution of a contract, certifies it:

a. is not owned or controlled by one or more citizens or nationals of a foreign country included in the list of countries that discriminate against U.S. firms published by the Office of the United States Trade Representative (USTR);
b. has not knowingly entered into any contract or subcontract for this Project with a contractor that is a citizen or national of a foreign country on said list, or is owned or controlled directly or indirectly by one or more citizens or nationals of a foreign country on said list.
c. has not procured any product nor subcontracted for the supply of any product for use on the Project that is produced in a foreign country on said list.

Unless restrictions of this clause are waived by the Secretary of Transportation in accordance with 49 CFR 30.17, no contract shall be awarded to Contractor or subcontractor who is unable

to certify to the above. If Contractor knowingly procures or subcontracts for supply of any product or service of a foreign country on said list for use on Project, the Federal Aviation Administration may direct, through the sponsor, cancellation of Contract at no cost to the Government.

Further, Contractor agrees if awarded a contract resulting from this solicitation, it will incorporate this provision for certification without modification in each contract and in all lower tier subcontracts. Contractor may rely upon the certification of a prospective subcontractor unless it has knowledge that the certification is erroneous.

Contractor shall provide immediate written notice to sponsor if Contractor learns its certification or that of a subcontractor was erroneous when submitted or has become erroneous by reason of changed circumstances. Subcontractor agrees to provide immediate written notice to Contractor, if at any time it learns that its certification was erroneous by reason of changed circumstances.

This certification is a material representation of fact upon which reliance was placed when making the award. If later determined Contractor or subcontractor knowingly rendered an erroneous certification, the Federal Aviation Administration may direct, through the sponsor, cancellation of contract or subcontract for default at no cost to the Government.

Nothing contained in the foregoing shall be construed to require establishment of a system of records to render, in good faith, certification required by this provision. Knowledge and information of a contractor is not required to exceed that normally possessed by a prudent person in the ordinary course of business dealings.

This certification concerns a matter within the jurisdiction of an agency of the United States of America and making of a false, fictitious, or fraudulent certification may render maker subject to prosecution under Title 18, United States Code, Section 1001.

Bidder hereby agrees to commence work under this Contract within 10 days of a date specified in written "Notice to Proceed" and to complete work within the consecutive calendar day framework noted in Contract. Bidder further agrees to pay as liquidated damages, the sum of $ 1,000.00 for each consecutive calendar day beyond each phase of days allowed as hereinafter provided in Article 32 of the General Conditions.

Bidder acknowledges receipt of the following addendum:_____

Enclosed with this Proposal is a Cashier's or Certified Check for_____

_____ Dollars ($_____)

or, a Proposal Bond in the sum of 5 percent of Greatest Amount Bid Dollars ($ 5 percent of Greatest Bid), which it is agreed shall be collected and retained by Owner as liquidated damages in the event the Proposal is accepted by the Owner within 90 days after date advertised for the reception of bids and undersigned fails to execute Contract or required bonds with Owner, under conditions hereof, within 10 days after date said proposal is accepted; otherwise, said check or bond shall be returned to undersigned upon demand.

_____
Contractor

(Seal if Bidder is a Corporation)

By_____

_____
Address

NOTE: Complete all blanks in this and accompanying forms and include proper bid security.

CONTRACT

STATE OF TEXAS

COUNTY OF MIDLAND

THIS CONTRACT, made and entered into this ___ day of _____, by and between the **CITY OF MIDLAND, TEXAS**, a home rule municipal corporation ("***Owner***"), and _____, ("***Contractor***").

WITNESSETH: That for and in consideration of the payments and agreements hereinafter mentioned, to be made and performed by Owner, and under the conditions expressed in the bond bearing even date herewith, Contractor hereby agrees to commence and complete the construction of items of work included in this project, which are described as regrading of an existing basin to designed slopes, construction of new drainage flumes, and new concrete access to basin floor.

Work will also include other miscellaneous materials, equipment, machinery, superintendence, and labor for constructing these improvements for the Midland International Air & Space Port.

These improvements are shown on the plans and Specifications entitled "Northwest Basin Wildlife Improvements" dated June 2023. The Plans and Specifications are hereby incorporated herein by reference for all legal purposes and shall apply to this Contract as if fully set forth herein.

This Contract shall include all extra work in connection therewith. All work performed hereunder shall be in accordance with those certain General Conditions and Special Provisions, which are attached hereto and hereby incorporated herein by referenced for all legal purposes and shall apply to this Contract as if fully set forth herein. Contractor shall, at Contractor's own proper cost and expense, furnish all materials, supplies, machinery, equipment, tools, superintendence, labor, insurance, and other accessories and services necessary to complete said construction, in accordance with conditions and prices stated in Proposal attached hereto, and in accordance with all General Conditions and Special Provisions, and in accordance with plans, which includes all maps, plats, blueprints, and other drawings and printed or written explanatory matter thereof, and Specifications therefor, as prepared by Parkhill ("***Engineer***"), each of which has been identified by endorsement of Contractor and Engineer thereon, together with Contractor's written Proposal, and General Conditions and Special Provisions, and Performance Bond and Payment Bond hereto attached; all of which are made a part hereof and collectively evidence and constitute the entire agreement between the parties hereof.

Contractor hereby agrees to commence work under this Contract within 10 days of a date to be specified in written "Notice to Proceed" and to complete work under Base Bid identified on plans within 90 calendar days from Notice to Proceed.

Contractor further agrees to pay as liquidated damages the sum of one thousand dollars ($1,000) for each consecutive calendar day beyond days allowed as hereinafter provided in Article 32 of the General Conditions.

Owner agrees to pay Contractor from current funds for performance of this Contract in accordance with Proposal submitted therefor, subject to additions and deductions, as provided in specifications, and to make payments on account thereof as provided therein.

BY EXECUTING THIS CONTRACT, CONTRACTOR AGREES TO WAIVE AND DOES HEREBY WAIVE ANY CLAIM CONTRACTOR HAS OR MAY HAVE AGAINST THE CITY OF MIDLAND, TEXAS, AND PARKHILL, REGARDING AWARD OF ATTORNEY FEES, WHICH ARE IN ANY WAY RELATED TO CONTRACT, OR CONSTRUCTION, INTERPRETATION OR BREACH OF CONTRACT. CONTRACTOR SPECIFICALLY AGREES IF CONTRACTOR BRINGS OR COMMENCES ANY LEGAL ACTION OR PROCEEDING RELATED TO THIS CONTRACT, CONSTRUCTION, INTERPRETATION, VALIDITY, OR BREACH OF THIS CONTRACT, INCLUDING BUT NOT LIMITED TO ANY ACTION PURSUANT TO PROVISIONS OF THE TEXAS UNIFORM DECLARATORY JUDGMENTS ACT (TEXAS CIVIL PRACTICE AND REMEDIES CODE SECTION 37.001, *ET SEQ*., AS AMENDED), CONTRACTOR AGREES TO WAIVE AND RELINQUISH ANY AND ALL RIGHTS TO RECOVERY OF ATTORNEY FEES TO WHICH CONTRACTOR MIGHT OTHERWISE BE ENTITLED.

CONTRACTOR AGREES THIS IS INTENTIONAL RELINQUISHMENT OF A PRESENTLY EXISTING KNOWN RIGHT. CONTRACTOR ACKNOWLEDGES THAT CONTRACTOR UNDERSTANDS ALL TERMS AND CONDITIONS OF THIS CONTRACT.

By execution of this Contract, Contractor hereby represents and warrants to the City of Midland, Texas, that Contractor has read and understood the Contract.

This Contract shall be governed by laws of the State of Texas. Venue of any suit, right or cause of action arising under or in connection with this contract shall lie exclusively in Midland County, Texas. All payments and performance under or connected to this contract shall be deemed to have occurred exclusively in Midland County, Texas.

IN WITNESS WHEREOF, the parties to these presents have executed this Agreement in the year and day first above written.

OWNER:

CITY OF MIDLAND, TEXAS

By_____
Lori Blong, Mayor

ATTEST:

By_____
Marcia Bentley-German, City Secretary

CONTRACTOR: _____

By_____
Signature

Name, Title: _____
Print

Complete Address:

_____

_____

STATE OF _____

COUNTY OF _____

Before me, _____, on this day, personally
Notary

appeared, _____ (Name of Signer), who

□ is known to me

□ proved to me on the oath of _____
Witness

□ proved to me through _____
Document Description

to be the person whose name is subscribed herein and acknowledged to me execution of the same for purposes and consideration herein expressed.

Given under my hand and seal of office this

_____ day of _____, A.D., _____.
Day Month Year

Notary Seal

_____
Signature of Notary Officer

PERFORMANCE BOND
SUBMITTED IN COMPLIANCE WITH CHAPTER 2253 OF THE TEXAS GOVERNMENT CODE

STATE OF TEXAS §

COUNTY OF MIDLAND §

KNOW ALL MEN BY THESE PRESENTS: That we, _____of the City of _____, County of _____, and State of _____, as Principal, and _____ _____ hereinafter called "Surety," are held and firmly bound unto the City of Midland, Texas, a home rule municipal corporation of Midland County, Texas, (hereinafter called the City-Obligee), in the penal sum of _____ _____ DOLLARS, ($_____) lawful money of the United States, well and truly to be paid to the City of Midland, Texas, for payment whereof said Principal and Surety bind themselves and their heirs, administrators, executors, successors, and assigns, jointly and severally, firmly by these presents.

WHEREAS, Principal has entered a certain written contract with the Owner-Obligee, dated the __ day of _____ 20__, to the Northwest Basin Wildlife Improvements for the Midland International Air & Space Port, Midland, Texas specifically including in the scope of this work and bond, additional maintenance guaranty provisions set forth in Contract conditions, which Contract is hereby referred to and made a part hereof as fully and to the same extent as if copied at length herein, as well as the Principal's primary obligation to perform according to Plans and Specifications.

NOW, THEREFORE, THE CONDITION OF THIS OBLIGATION IS SUCH, if said Principal shall faithfully perform work in accordance with Plans, Specifications, Instructions to Bidders, General and Special Conditions, and other Contract Documents, including any addendums thereto, then this obligation shall be void; otherwise, to remain in full force and effect.

PROVIDED further if any legal action be filed upon this Bond venue shall lie in Midland County, State of Texas.

PROVIDED further this Performance Bond is submitted in compliance with Chapter 2253 of the Texas Government Code.

Surety, for value received, stipulates and agrees no change, extension of time, alteration, or addition to terms of the Contract, or to the work performed thereunder, or Plans, Specifications or Drawings

accompanying the same, or any assignment of the Contract as may be provided for in Instructions to Bidders, shall in any way affect its obligation on this Bond, and it does waive notice of any such change, extension of time, alteration, or addition to the terms of the Contract, assignment thereof, or to the work to be performed thereunder.

IN WITNESS WHEREOF said Principal and Surety have signed and sealed this instrument, this ____ day of _____, 20__.

_____	_____
Contractor	Surety
By _____	By _____
	(Title)

NOTE: If signed by an officer of Surety Company, there must be on file a certified extract from by-laws showing this person has authority to sign such obligation. If signed by an Attorney in Fact, Owner must be furnished with a copy of Power of Attorney for their files.

PAYMENT BOND
SUBMITTED IN COMPLIANCE WITH CHAPTER 2253 OF THE TEXAS GOVERNMENT CODE

STATE OF TEXAS §

COUNTY OF MIDLAND §

KNOW ALL MEN BY THESE PRESENTS: That we, _____of the City of _____, County of _____, and State of _____ _____, as principal, and _____, hereinafter called "Surety," are held and firmly bound unto the City of Midland, Texas, a home rule municipal corporation of Midland County, Texas, (hereinafter called "City-Obligee"), in the penal sum of _____ DOLLARS, ($___ _____) lawful money of the United States, well and truly to be paid to the City of Midland, for payment whereof said Principal and Surety bind themselves and their heirs, administrators, executors, successors, and assigns, jointly and severally, firmly by these presents.

WHEREAS, Principal has entered into a certain written contract with Owner-Obligee, dated the ____ day of _____ 20_, to the Northwest Basin Wildlife Improvements for the Midland International Air & Space Port, Midland, Texas which contract is hereby referred to and made a part hereof as fully and to the same extent as if copied at length herein.

NOW, THEREFORE, the condition of this obligation is if said Principal shall pay all claimants supplying labor and material to him or a subcontractor in the prosecution of the work provided for in said contract, then this obligation shall be null and void; otherwise, to remain in full force and effect.

PROVIDED further if any legal action be filed upon this Bond venue shall lie in Midland County, State of Texas.

PROVIDE further this Payment Bond is submitted in compliance with Chapter 2253 of the Texas Government Code.

Surety, for value received, stipulates and agrees no change, extension of time, alteration, or addition to terms of this Contract, or to Work performed thereunder, or Plans, Specifications, or Drawings accompanying the same, or any assignment of Contract as may be provided in Instructions to Bidders, shall in any way affect its obligation on this Bond, and it does waive notice of any such change, extension of time, alteration, or addition to terms of the Contract, assignment thereof, or to work to be performed thereunder.

WITNESS our hands this the _____ day of _____, 20___.

_____	_____
Contractor	Surety
By_____	By _____
	(Title)

NOTE: If signed by an officer of Surety Company, there must be on file a certified extract from by-laws showing this person has authority to sign such obligation. If signed by an Attorney in Fact, Owner must be furnished with a copy of Power of Attorney for their files.

CERTIFICATE □F I□SURA□CE

T□□ CITY □F □ID□A□D
□ID□A□D I□TER□ATI□□A□ AIR & SPACE P□RT
□ID□A□D□ TEXAS

Date _____

Type □f Pr□□ect□ □□rthwest Basi□ Wi□d□ife I□pr□ve□e□ts

THIS IS T□ CERTIFY THAT _____

(□a□e □f I□sured)

is□ at the date □f this certificate□ i□sured by this C□□pa□y with respect t□ Busi□ess □perati□□s herei□after described□ f□r types □f I□sura□ce a□d i□ ac□□da□ce with pr□visi□□s □f a□□dard p□□icies used by this C□□pa□y□ a□d further herei□after described□ □ndep□ndent□ contra□tor□ on the reverse side here□□.

P□□icy □□	Effective	Expires	□i□its □f □abi□ity
W□r□□e□'s		Pub□□c	
C□□pe□sati□□	$_____	□abi□ity	
1 pers□□	_____	C□□□□ge□	
1 accide□t	$_____	□abi□ity	
1 accide□t	$_____		

Pr□perty Da□age
Bui□der's Ris□
Aut□□□bi□e
□ther

F□reg□i□g P□□icies (d□) (d□ □□t) c□ver a□□ sub□c□□tract□rs.

_____

□□cati□□s C□vered□
Descripti□□ □f □perati□□s C□vered□ _____

The □□ted p□□icies either i□ the b□dy there□f □r by appr□priate e□d□rse□e□t pr□vide they □ay □□t be cha□ged □r ca□ce□□ed by i□surer i□ □ess tha□ the □ega□ ti□e required after i□sured receives writte□ □□tice □f such cha□ge □r ca□ce□□ati□□□ □r□ i□ case there is □□ □ega□ require□e□t□ i□ □ess tha□ five days after i□sured receives such writte□ □□tice.

SE□D EIGHT C□PIES □F THIS CERTIFICATE T□ W□ER

_____
(□a□e □f I□surer)

By _____

Tit□e_____

Ph□□e_____

□□TE□ □a□e CITY □F □ID□A□D a□d PAR□HI□□ as additi□□a□ i□sureds □□ required i□sura□ce p□□icies.

SAMPLE ONLY
SUCCESSFUL
CONTRACTOR
SHALL PROVIDE
CERTIFICATE OF
INSURANCE
HIS CARRIER

EXPERIE□CE REC□RD

□ist □f Pr□□ects□ □i□e that c□vered by Pr□p□sa□□ Bidder successfu□□y c□□p□eted□

A□□u□t □f C□□tract Award	Type □f W□r□	Date C□□p□eted	□a□e a□d Address □f □w□er

□ist □f Pr□□ects Bidder is □□w e□gaged i□
c□□p□eti□g□

A□□u□t □f C□□tract Award	Type □f W□r□	Perce□t C□□p□eted	□a□e a□d Address □f □w□er

□ist □f Surety B□□ds i□ f□rce □□ u□c□□p□eted w□r□□

A□□u□t □f C□□tract Award	A□□u□t □f B□□d	□a□e □f Surety C□□pa□y

Bidder

Pri□t □a□e□

Busi□ess Address

EQUIP□E□T SCHEDU□E

Bidder sh□u□d □ist □a□□r equip□e□t avai□ab□e a□d serviceab□e f□r use □□
this W□r□□

P□rti□□ □f W□r□ Bidder pr□p□ses t□ sub□et□ if
a□y□

Dated this _____ day □f_____□ 20___□

By _____

Tit□e_____

CONTRACT ASSURANCE

Contractor will ensure the following clause is placed in every DOT-assisted contract and subcontract:

Contractor or subcontractor shall not discriminate based on race, color, national origin, or sex in performance of this Contract. Contractor shall carry out applicable requirements of 49 CFR Part 26 in award and administration of DOT-assisted contracts. Failure by Contractor to carry out requirements is a material breach of this Contract which may result in termination of this Contract or such other remedy as recipient deems appropriate. This may include, but is not limited to:

1. Withholding monthly progress payments;
2. Assessing sanctions;
3. Liquidated damages; and/or
4. Disqualifying Contractor from future bidding as non-responsible.

PROMPT PAYMENT

Prime Contractor agrees to pay each subcontractor under this Prime Contract for satisfactory performance of contract no later than 30 working days from receipt of each payment Prime Contractor receives from the City of Midland. Prime Contractor agrees further to return retainage payments to each subcontractor within 30 working days after subcontractor's work is satisfactorily completed. Any delay or postponement of payment from above referenced time frame may occur only for good cause following written approval of the City of Midland. The clause applies to both DBE and non-DBE subcontractors.

For purposes of this section, a subcontractor's work is satisfactorily completed when all tasks called for in subcontract have been accomplished and documented as required by the City of Midland. When the City of Midland makes an incremental acceptance of a portion of a prime contract, work of a subcontractor covered by that acceptance is deemed satisfactorily completed.

Contractor will not be reimbursed for work performed by subcontractors unless and until Contractor ensures subcontractors are promptly paid for work they have performed.

Contractor failure to comply with requirements of DBE Plan shall constitute a material breach of this Contract. In such a case, the City of Midland reserves the right to terminate Contract; to deduct amount of DBE goal not accomplished by DBE from money due or to become due Contractor, not as a penalty but as liquidated damages to the City of Midland or such other remedy/remedies as the City of Midland deems appropriate.

CITY OF MIDLAND DEPARTMENT OF AIRPORTS
DBE POLICY STATEMENT

Section 26.1, 26.23 Objectives/Policy Statement

The City of Midland, Owner and Operator of Midland International Air & Space Port, herein referred to as MAF, established a Disadvantaged Business Enterprise (DBE) program in accordance with regulations of the U.S. Department of Transportation (DOT), 49 CFR Part 26. MAF received Federal financial assistance from the Department of Transportation and as a condition of receiving this assistance, MAF signed an assurance to comply with 49 CFR Part 26.

It is the MAF policy to ensure DBEs, as defined in Part 26, have an equal opportunity to receive and participate in DOT-assisted contracts. It is also our policy to:

1. ensure nondiscrimination in award and administration of DOT-assisted contracts;
2. create a level playing field on which DBEs can compete fairly for DOT-assisted contracts;
3. ensure DBE Program is narrowly tailored in accordance with applicable law;
4. ensure only firms who fully meet 49 CFR Part 26 eligibility standards are permitted to participate as DBEs;
5. help remove barriers to participation of DBEs in DOT-assisted contracts; and
6. assist development of firms that can successfully compete in the marketplace outside the DBE program.

An MAF staff person has been delegated as the DBE Liaison Officer. In that capacity, appointed staff is responsible for implementing all DBE program aspects. Implementation of the DBE program is accorded the same priority as compliance with all other legal obligations incurred by MAF in financial assistance agreements with the Department of Transportation.

MAF disseminated this policy statement to the City Council of the City of Midland, Texas and all components of the organization. We distributed this statement to DBE and non-DBE business communities who perform work for us on DOT-assisted contracts. This is accomplished via inclusion in all our Bid Documents.

Justine Ruff, Director of Airports

Section 26.37Monitoring Responsibilities

MONITORING PAYMENTS TO DBEs AND NON-DBEs

MAF undertakes ongoing monitoring of prime payments to subcontractors over the course of any covered contract. Such monitoring activities will be accomplished as follows:

1. Prime Contractors must submit monthly proof of prompt payment to Airport.
2. DBELO will monitor prompt payment to subcontractors via review of cancelled checks and/or accounts payable ledgers submitted with monthly reports.
3. DBELO will verify checks payable to subcontractors are dated within prompt payment period.
4. DBELO may also contact DBE subcontractors by phone/email to confirm receipt of payment within prompt payment period.

Airport requires prime contractors to maintain records/documents of payment to subcontractors, including DBEs, for a minimum of three years unless otherwise provided by applicable record retention requirements for Airport financial assistance agreement, whichever is longer. These records will be made available for inspection upon request by any authorized representative of the MAF or DOT. This reporting requirement extends to all DBE and non-DBE subcontractors.

INFORMATION TO BE SUBMITTED (26.53(B)):

MAF treats Bidder/Offeror compliance with good faith effort requirements as a matter of responsiveness.

Requirements of 49 CFR Part 26, Regulations of the U.S. Department of Transportation, apply to this Contract. It is MAF policy to practice nondiscrimination based on race, color, sex, or national origin in award or performance of this Contract. All firms qualifying under this solicitation are encouraged to submit Bids/Proposals. Award of this Contract will be conditioned upon satisfying Bid Specification requirements applying to all Bidders/Offerors, including those who qualify as a DBE. A DBE Contract goal of 9.8 percent has been established for this Contract. Bidder/Offeror shall make good faith efforts, as defined in Appendix A, 49 CFR Part 26, to meet the Contract goal for DBE participation in performance of this Contract.

Types of actions to support good faith efforts at meeting Contract goal for DBE participation (not intended as an all-inclusive list and other methods by Bidder may be relevant in documenting good faith effort:

1. Have DBE subcontractors attend Prebid Meeting
2. Documentation of notices sent to potential DBE subcontractors requesting interest in bidding.
3. Documentation of emails sent to potential DBE subcontractors requesting interest in bidding.
4. Documentation (dates and times) of phone calls made to potential DBE subcontractors informing them of the Project and soliciting an interest in bidding. This should include follow-up calls to support aggressively attempting to obtain DBE participation.

Good faith effort documentation must be included with Proposal submitted.

TO INCLUDE WITH PROPOSAL:

Bidder/Offeror shall include with their proposal:

1. Form 1: Disadvantaged Business Enterprise (DBE) Utilization, (signed by Bidder/Offeror);
2. Form 2: Letter of Intent (for each DBE firm). Note: *DBE firm signature not required at time of proposal submission*; and
3. Completed Bidder Information Sheet.

UPON AWARD OF CONTRACT:

Successful Bidder/Offeror will be required to submit the following information within 5 days of Bid Opening:

(1) names and addresses of DBE firms who will participate in the Contract;
(2) description of work each DBE firm will perform;
(3) dollar amount of participation for each DBE firm participating;
(4) written documentation of Bidder/Offeror commitment to use a DBE subcontractor whose participation meets Contract goal;
(5) written confirmation from DBE of Contract participation as provided in commitment made under (4); and
(6) upon unmet Contract goal, evidence of good faith efforts. Successful Bidder/Offeror must submit DBE written confirmation of participation within five days after Bid Opening.

Midland International Air & Space Port

To all Bidders for AIP funded projects for Midland International Air & Space Port:

Any company desiring to submit a bid on an AIP grant project for the Midland International Air & Space Port, must complete a Bidder Information Sheet that includes:

- Name of Firm
- Address of Firm
- Age of Firm
- Whether firm is a certified disadvantaged business enterprise
- Amount of annual gross receipts

Before contract is awarded, companies must also submit Demonstration of Good Faith Efforts Form 1: DBE Utilization, and Form 2: Letter of Intent for each DBE subcontractor. If DBE goal percentage is met, complete one Form 1 and a separate Form 2 for each DBE subcontractor. If not met, complete Form 1, and submit documentation of Good Faith Efforts (see 49 CFR Part 26, Appendix A) to support percentage accomplished.

Upon Airport acceptance of bid, the following information must be submitted to Midland International Air & Space Port's Disadvantage Business Enterprises Liaison Officer (DBELO) before project is started:

- Commitments made to all subcontractors (DBE and non-DBE): MAF Form 2: Letter of Intent or TxDOT Form 4901
- Proof of DBE certification of all DBE subcontractors.

Once project starts, a Monthly Progress Report (MAF Form or TxDOT Form 4903 or 4904) of the actual dollar amount paid to DBE subcontractors should be submitted monthly to the DBELO.

For questions, please call 432.560.2200. Thank you for your time and consideration regarding this matter.

Sincerely,

MAF, Liaison Officer
Disadvantage Business Enterprise

Encl

FORMS 1 AND 2: DEMONSTRATION OF GOOD FAITH EFFORTS

Form 1: Disadvantaged Business Enterprise (DBE) Utilization

Undersigned Bidder/Offeror has satisfied bid specification requirements as follows:

☐ Bidder/Offeror met DBE contract goal:

Bidder/Offeror is committed to a minimum of 9.82% DBE utilization on this contract.

☐ Bidder/Offeror has not met DBE contract goal:

Bidder/Offeror is committed to a minimum of _____ % DBE utilization on this contract and submitted documentation demonstrating good faith efforts.

Legal name of Bidder/Offeror's firm: _____

Bidder/Offeror Representative: _____

Name/Title: _____

_____ _____

Signature Date

Form 2: Letter of Intent

Note: Authorized representative (AR) named herein must be a vested individual with authority to make contracting decisions on behalf of the firm.

Name of Bidder/Offeror's firm: _____

Name/title of firm's AR: _____

Phone: _____ Email: _____

Name of DBE firm: _____

Name/title of DBE firm's AR: _____

Address: _____

City: _____ State: ____Zip: _____

Phone: _____ Email: _____

Work to be performed by DBE firm: _____

Description of Work	NAICS	Dollar Amount/%*	Dealer/Manufacturer**

**Percentage to be used only in negotiated procurements, including design-build contracts.*
***For material suppliers only, indicate if DBE is a manufacturer or regular dealer as defined by §26.55.*

Undersigned Bidder/Offeror is committed to utilizing the named DBE firm for work described herein. Total expected dollar value of this work is $_____.
Bidder/Offeror understands if awarded contract/agreement resulting from this procurement, it must enter a subcontract with identified DBE firm representative of listed type and amount of work. Bidder/Offeror understands upon submitting this form with bid/offer, it may not substitute/terminate listed DBE without following procedures of 49 CFR Part 26, §26.53.

_____ _____

Signature of Bidder/Offeror's Authorized Representative Date

Undersigned DBE affirms it is ready, willing, and able to perform amount and type of work as described herein and is properly certified to be counted for DBE participation, therefore.

_____ _____

Signature of DBE's Authorized Representative Date

If Bidder/Offeror does not receive award of prime contract, all representations in this Letter of Intent shall be null and void.

Submit this page for each DBE subcontractor.

Midland International Air & Space Port

Department of Airports

BIDDER INFORMATION SHEET

Firm Name: _____

_____

Address: _____

_____

_____

Age of Firm: _____

Is your Firm a Certified Disadvantaged Business Enterprise (DBE)? **YES**
NO

Mark the category of your Firm's Annual Gross Receipts.

Less than $1 million.
More than $1 million, less than $5 million.
More than $5 million, less than $10 million.
More than $10 million, less than $15 million.
More than $15 million.

DBE/NON-DBE MONTHLY PROGRESS REPORT FOR MAF

Project: _____ AIP Grant No.: _____

Contractor: _____ Contract Amount: _____

DBE Goal: _____ DBE Goal Dollars: _____

Contractor DBE Status (DBE/non-DBE): _____ Reporting Month: (Month/Year): _____

Vendor Number	Name of Prime/Subcontractor DBE or Non-DBE	*D/N	**Disadvantaged Group	Type of Work	***Total $ Amt Paid for Work Performed (Prime & Sub; DBE & Non-DBE)	**** $ Amt Paid to Non-DBE Firm this Pay Period	***** $ Amt Paid to DBE Firm this Pay Period

* All payments to DBE and Non-DBE firms are required to be reported (D=DBE; N=non-DBE).

** If firm is a DBE, report Disadvantaged Group the DBE firm falls under: BA=Black American; HA=Hispanic American; NA=Native American; SAA=Subcont. Asian American; APA=Asian Pacific American; NMW=Non-Minority Women; O=Other.

*** Goal/commitment progress report amount and/or race-neutral amount. Do not subtract non-DBE/second-tier subcontractors and haulers from this column.

**** Report amount paid to non-DBE firm or sub.

***** Report amount paid to DBE firm or sub.

If using a non-DBE hauling firm that leases from DBE truck owner-operators, payments made to each owner-operator must be reported separately. Report amount of payment DBE subcontractors paid to non-DBE subcontractors/haulers.

Submission of this report for periods of negative DBE activity is required. This report is required monthly until entirety of project specified is completed.

I hereby certify the above is a true and correct statement of amounts paid to the DBE or Non-DBE firms listed above.

Signature: _____ Date: _____

Company Official

🛠**This report must be submitted with monthly request for payment.**

SPECIA□ PR□VISI□□S

SP□1 SC□PE □F W□R□

W□r□ t□ be acc□□p□ished u□der these Specificati□□s i□c□udi□g p□a□s sha□□ c□□sist □f□

1.1 Pri□cipa□ ite□s □f W□r□ are set f□rth i□ specific detai□ i□ the pr□p□sa□ secti□□ □f these Specificati□□s□ h□wever□ W□r□ □ay be ge□era□□y described as regradi□g □f a□ wi□ gwbasi□ at□desig□ced□de□ pter□ c□iscstructi□e□usf□ atevidrai□ageq□ipu□eest□ □achi□e□d□ew superc□rete□de□s□c□ basid□ f□ab□□rf□r c□□structi□g these i□pr□ve□e□ts f□r the □id□a□d I□ter□ati□□a□ Air & Space P□rt (□AF)□ □id□a□d□ Texas.

1.3 C□□tract□r sha□□ fur□ish a□□ □ab□r□ □ateria□s□ a□d equip□e□t □ecessary t□ c□□p□ete W□r□ ca□□ed f□r i□ these Specificati□□s a□d sh□w□ □□ the P□a□s.

SP□2 C□□TRACT D□CU□E□TS

1.4 Pay□e□t artic□es□ Tech□ica□ Secti□□s.

A□□ W□r□ a□□vered by this C□□tract sha□□ be d□□e i□ acc□rda□ce with C□□tract D□cu□e□ts described i□ the Ge□era□ C□□diti□□s. Drawi□gs i□c□uded i□ d□cu□e□ts c□□sist □f the p□a□s e□tit□ed "□□rthwest Basi□ Wi□d□□e□pr□ve□e□ts□ dated □u□e 2023" with a□□ Drawi□gs a□d Specificati□□s. Bidders sha□□ be th□rough□y fa□i□iar

C□□tract□r sha□□ be resp□□sib□e f□r satisfact□ry c□□p□eti□□ □f a□□ W□r□ sh□w□ □□ Drawi□gs □r specified.

I□te□t □f P□a□s a□d Specificati□□s is t□ prescribe a c□□p□ete W□r□ □r i□pr□ve□e□t which C□□tract□r u□derta□es t□ d□ i□ fu□□ c□□p□ia□ce with P□a□s□ Specificati□□s□ Specia□ Pr□visi□□s□ Pr□p□sa□□ a□d C□□tract. C□□tract□r sha□□ d□ a□□ W□r□ i□c□udi□g such additi□□a□□ extra□ a□d i□cide□ta□ W□r□ c□□sidered □ecessary t□ c□□p□ete the Pr□□ect i□ a satisfact□ry a□d acceptab□e □a□□er□ as pr□vided i□ P□a□s□ C□□tract D□cu□e□ts□ Pr□p□sa□□ Specificati□□s□ Drawi□gs□ a□d a□y Addenda. □□□ess□ therwise pr□vided i□ Specificati□□s□ Specia□ Pr□visi□□s□ bi□di□g □□ tract□r□ C□□tract□r sha□□ f□rnish a□□ □ab□r□ □ateria□s□ equip□e□t□ t□□s□ pri□ci□a□ subc□□tracted□ i□ter□ati□□a□ Air & Space P□rt□ □id□a□d□ Texas□

SP□3 TI□E A□D □RDER □F C□□P□ETI□□

C□□tract□r is per□itted t□ pr□secute certai□ p□rti□□s □f W□r□ i□ □rder a□d □a□□er □f □w□ ch□□si□g
t□ the best i□terest □f the Pr□□ect□ h□wever□ W□r□ sha□□ be c□□ducted i□ such □a□□er a□d with such
□ateria□s□ equip□e□t□ a□d □ab□r as required t□ e□sure c□□p□eti□□ i□ acc□rda□ce with P□a□s a□d
Specificati□□s□withi□ ti□e stated□appr□ved□ateria□s□sub□itta□s□are□required□bef□re i□□□rpha□i□□f
with pr□□ress□sched□le□ t□ a□□rid□de□ays□ W□appr□ved□sched□le□ vide□ Wp□rete□ f□r□ati□ced t□
Par□hiu□□□appr□va□.
p□ssib□e f□r□review a□d appr□val.
C□□tract□r shall be required t□ execute vari□us p□rti□□s □f the Pr□□ect i□ phases t□ □ai□tai□ usage
□f airp□rt faci□ities as we□□ as safety duri□g the e□tire Pr□□ect. C□□tract□r wi□□ be a□□□wed t□ deve□□p □w□
phasi□g p□a□ which wi□□ □eet phasi□g i□te□t sh□w□ □□ P□a□s. C□□tract□r phasi□g p□a□ wi□□ be subject t□
Par□hiu□□□appr□va□.
this C□□tract. C□□tract□r sha□□ be expected t□ c□□rdi□ate his W□r□ with W□r□ □f □ther C□□tract□rs as
required t□ e□sure a□□ W□r□ ca□ be carried □ut with the □east p□ssib□e i□terfere□ce with □perati□□ □f □ther
c□□tract□rs □r □w□er. C□□tract□r c□□rdi□ati□□ with □ther c□□tract□rs sha□□ require Par□hi□□ appr□va□.
□w□er reserves the right t□ schedu□e W□r□ a□d direct sequence□of□operati□ns□in areas□where□ be w□r□iPar□hi□□ advised □f
Pri□rities□shall□be□made□for□the□□ontractors□in□the□event□of□conflicts□arising□between□Airport□and other
□ontracts□as we□□ as
access t□ the taxiways a□d ru□ways wi□□ be c□□sed as required f□r pr□per executi□□ □f W□r□□ but at □east
three days□notice□will□be□required□before□closing□any□portion□of□a□taxiway□or□runway. Director□of Airp□rts□C□□tract□r is
required t□ e pr□vide□ Airsta□ (a TA□A) required□for□vari□us□closed□runway□taxiway□ar□si□gs i□ acc□rda□ce with
the □atest FAA Advis□ry Circu□ar 150□5370 a□d □ther app□icab□e FAA regu□ati□□s. □□ separate
SP□4 □EASUREMENT AND PAYMENT
Measure□ent□for□payment□shall□be□made f□r c□□sed ru□way □r taxiway □ar□i□g. C□□rdi□ate a□□ □perati□□s
thr□ugh Par□hi□□ a□d Direct□r□f Airp□rts.
C□□tract□r be per□itted t□ tra□sfer
f□rces fr□□ u□c□□p□eted W□r□ t□ □ew W□r□ with□ut Par□hi□□ per□issi□□. C□□tract□r is required t□
sub□it a schedu□e □f □perati□□s t□ Par□hi□□ f□r appr□va□. C□□tract□r sha□□ □□t c□□□e□ce □ew W□r□ tract□r sha□□ ta□e a□□ □ecessary precauti□□s t□ e□sure □perati□g aircraft a□d the pre□ence□of□Safety□Area
we□□ as that □f C□□tract□r equip□e□t a□d pers□□□e□. Give specia□ c□□siderati□□s t□ f□ight schedu□es a□d
r□utes ta□e□ by equip□e□t trave□i□g withi□ Airp□rt area. C□□tract□r sha□□ pr□vide a□□ such equip□e□t with
a f□ag □□ a staff attached t□ equip□e□t□ s□ f□ag is readi□y visib□e. F□ag sha□□ be □□t □ess tha□ 3 feet square□
chec□ered patter□ □f i□ter□ati□□a□ □ra□ge□a□d□white squares□ □□t □ess tha□ 1 f□□t □□ each side. C□□tract□r
shall□estimate a□□ difficu□ties t□ be□encountered□in□the□performance□of□the□work□and□allow□for□them□in□the□bid□price.
SP□5 □EASUREMENT AND PAYMENT
No□separate□measurement□or□payment□shall□be□made□for□this□item□but□all□costs□in□connection□with□this□item□shall□be□included□in□the□price□bid□for□the□various□items□of□work□listed□in□the□bid□schedule.
SP□6 □ITIGATION □F □PERATI□□S
C□□tract□r shall□□□t□□ause□or□allow□any□□ondition□to□exist□that□will□cause□the□Airport□to□be□in□violation□of□any□Federal,□State□or□local□laws□or□regulations□governing□the□control□of□pollution□of□the□environment.□The□Contractor□shall□be□responsible□for□the□containment,□cleanup,□and□disposal□of□all□materials□spilled□on□the□Airport□and□shall□immediately□notify□the□Director□of□Airports□of□any□spill□regardless□of□size.
SP□7 □□□□

□ightti□e c□□structi□□ activities are □□t per□itted with□ut pri□r appr□va□ □f Par□hi□□ a□d Direct□r
□f Airp□rts. If required a□d per□itted□ □ightti□e c□□structi□□ activities sha□□ be as □□ted □□ P□a□s a□d
c□□rdi□ated□ thr□ugh Par□hi□□□ with Direct□r □f Airp□rts. Duri□g □ightti□e c□□structi□□□ C□□tract□r sha□□
pr□vide a□□rdi□ate□ equip□e□t trave□i□g with□ugh Airpar□hi□□ with a Direc□ashi□g f□ Aigh□ that is□ ways visib□ i□ter□ere□ce with
aipera□i traffic. □□ active ru□ways□ taxiways□ □r apr□□s wi□□ resu□t fr□□ C□□tract□r □perati□□s.
C□□structi□□ activities are □□t a□□□wed withi□ safety areas □f a□y active ru□way□taxiway u□□ess appr□ved
by Par□hi taxiway Direct ar c.f Airp□rts.

- Taxiway safety area is the area withi□ 90 feet □f the ce□ter□i□e □f a□y
- Ru□way safety area is the area withi□ 250 feet □f the ce□ter□i□e □f a□y ru□way whe□ aircraft
  are □perati□g u□der Visua□ F□ight Ru□e (VFR□ c□ear weather) c□□diti□□s□ □r withi□ 570 feet
  f the ce ter t e sha y rai way whe aircraft are perati g u der I strume t

As required C□□tract□r sha□ ai□ tai□ safe□ pa□hs□ di□ect traffic t□ cr□ss Fr ight Ru□e
a□□g a□y ac□ive taxiway □apr weather) cu□ way. Direct traffic away fr□□ these faci□ities whe□
p□ssib□e a□d
□ever a□□□ traffic□t cr□ss a□ active ru□ way□ taxiway □r apr□□ with□t pr□per c□ara□ce.
Par□hi□□ advised □f
this schedu□e s□ c□□se c□□rdi□ati□□ ca□ be □ai□tai□ed with Direct□r □f Airp□rts. Apr□□s□ ru□ways□ a□d
taxiways wi□ tra□be□ c□sed as requiredf□r pr□per execu□i safet□W□f aircraft traffic a□d be acquai□ted Artic□es with
ru□es a□d regu□ati□□s c□□cer□i□g aircraft traffic safety. □ai□tai□ FAA Advis□ry Circu□ar 150□5370□2G□
"□perati□□a□ Safety □□ Airp□rts duri□g C□□structi□□□" require□e□ts. Vi□□ati□□s □f safety ru□es by
C□□tract□r w□r□ers sha□□ resu□t i□ discharge □f such w□r□ers i□ acc□rda□ce with Ge□era□ C□□diti□□s.
C□□ti□ued □r□ati□s□ f safety ru□es a□d regu□ati□s by C□□tract□r after Par□hi□ f□r □AF Airpfyrt
but□ut□ide safety□ar□as□f taxiways□au□ways□ta□e gr□struds f□r. suspe□tract grCha□tracpr□r vide a□ aipera□i□□s u□ti□ steps
pr□□ai□i□g a□ t□ ie□uip□e safe□ pera□i f□r c□□structi□□ purp□ses□ as we□□ as f□r par□i□g e□p□□yee vehic□es. This
area sha□□ be □□cated away fr□□ the Airp□rt □perati□□a□ area (A□A) i□ a□ area appr□ved by Par□hi□□ a□d
Direct□r □f Airp□rts. C□□tract□r sha□□ uti□i□e existi□g vehi□e gates f□r e□ployees a□d sub□□tract□rs□ the A□A. If□tract□r sha□□
be respo□sib□e fo□ a□y fi□e□ off□ce□ outside authe□ized areas C□□tract□r□ cate the A□A thr□ugh this gate□ C□□tract□r
sha□ u□dertake site. Airp□rt□ shall□ not□ be□ liable□ for□ any□ damage□ to□ equipment□ or□ personnel□ arising□ out□ of□ the□ use□ of□ the□ Airport□ Operations□ Area□ (AOA)□ by□ the□ Contractor□ or□ its□ employees□ or□ subcontractors□ except□ to□ the□ extent□ caused□ by□ the□ negligence□ or□ willful□ misconduct□ of□ the□ Airport□ or□ its□ employees□ or□ agents□.
Haui□g r□utes□ i□ a□ c□ea□ c□□diti□□□ suitab□e f□r use by aircraft□ as deter□i□ed by Direct□r □f Airp□rts.
C□□tract□r sha□□ □ai□tai□ pave□e□t surfaces □f ru□ways□ taxiways□ a□d apr□□s□ e□teri□g taxiwayi□g the gate□ with□ut specific writte□ auth□ri□ati□□ fr□□ Par□hi□□ a□d Direct□r □f Airp□rts. A□y da□age i□curred by
C□□tract□r equip□e□t sha□□ be repaired by a□d at C□□tract□r expe□se a□d as required by Par□hi□□ a□d
Direct□r □f Airp□rts.
C□□tract□r sha□□ □ai□tai□ pave□e□t surfaces □f ru□ways□ taxiways□ a□d apr□□s□ as hau□i□g r□utes□ i□ a c□ea□ c□□diti□□□ suitab□e f□r use by aircraft□ as deter□i□ed by Direct□r □f Airp□rts.

Successfu□ Bidder is sub□ect t□ a pre□award review by □ffice □f C□□p□ia□ce a□d Security□ Equa□
□pp□rtu□ity Divisi□□□ Federa□ Aviati□□ Ad□i□istrati□□□ t□ deter□i□e C□□tract□r's previ□us c□□p□ia□ce
status. C□□tract□r is sub□ect t□ a prec□□structi□□ c□□fere□ce t□ discuss phasi□g a□d Pr□□ect safety c□□tr□□
after award □f C□□tract.

SP□5 C□□STRUCTI□□ ACTIVITY

Whe□ c□□structi□□ activity is perf□r□ed □□□ad□ace□t t□ A□A□ the f□□□□wi□g ru□es a□d regu□ati□□s
app□y u□□ess □therwise auth□ri□ed by Airp□rt □perati□□s. C□□tract□r □ust have a□□ picture□badged
supervis□rs fi□gerpri□ted□ Fi□gerpri□ti□g c□st is $70□00 per pers□□□ paid by C□□tract□r.

5□2 Esc□rts□Badges. At□east□one supervis□r with a□A□A picture badge□ust be□present□with□each□group□of□unbadged□persons□vehicle□operating□in□the□A□A□at□all□times. Escorts must be accompanied by a□ badged□person□□ A□ unbadged□person□□ vehicle□ must□be□ preceded by a 3□ x 3□f□□t □ra□ge□a□d□ white chec□ered f□ag. Traffic □ust a□ways adhere t□ hau□ r□utes (see Subartic□e 5□3).

□□□y auth□ri□ed airp□rt pers□□□e□ are t□ perf□r□ esc□rts □ff estab□ished hau□ r□utes.

5□3 Hau□ R□utes. Estab□ish□ permit□ A□A hau□ r□utes□ □ust be auth□ri□ed through Airp□rt □perati□□s□ for□ aircraft□ operating□in□the□A□A□at□all□times. Hau□ r□utes□ are□ established□ to□ provide□ adequate□ clearance□ from□ obstacles□ and□ adequate□ separation□ between□ aircraft□ using□ different□ hau□ r□utes. Criteria□ for□ establishing□ hau□ r□utes□ are□ based□ on□ aircraft□ performance□ characteristics□ and□ the□ ability□ to□ maneuver□ within□ the□ hau□ r□ute□ and□ runway□ environment. Hau□ r□utes□ are□ established□ to□ avoid□ conflicts□ with□ existing□ or□ proposed□ aircraft□ operations□ and□ to□ minimize□ impact□ on□ airport□ operations. Hau□ r□utes□ are□ established□ and□ published□ by□ Airp□rt □perati□□s□ for□ aircraft□ operating□ in□ the□ A□A□ at□ all□

5□5 Restricted Areas□ C□□structi□□ pr□hibited i□ these areas u□□ess auth□ri□ed by Airp□rt
□perati□□s□
A. Withi□ 90 feet □f a taxiway □r apr□□ taxiway ce□ter□i□e.
B. Withi□ 250 feet para□□e□ t□ ru□way ce□ter□i□e. (500 feet duri□g p□□r visibi□ity
as deter□i□ed by Airp□rt □perati□□s.)
C. Withi□ 1□000 feet □f e□d □f the ru□way.
D. Withi□ certai□ areas ab□ut ru□way t□ cause i□terfere□ce with
5□6 Tre□□ches and Excavati□□s□ □□ tre□ches □r excavati□□s a□□□wed withi□ these areas□
equip□e□t.
A. Withi□ 90 feet para□□e□ t□ taxiway ce□ter□i□e.
B. Withi□ 250 feet para□□e□ t□ ru□way ce□ter□i□e.
C. Withi□ 1□000 feet □f e□d □f ru□way.
EXCEPTI□□□ Auth□ri□ati□□ c□□sidered □□ a case□by□case basis by Airp□rt
5□7 St□c□pi□es □f Materials□ □□ st□c□pi□ed □ateria□ a□□□wed withi□ these areas□
A. Withi□ 90 feet para□□e□ t□ taxiway ce□ter□i□e.
B. Withi□ 250 feet para□□e□ t□ ru□way ce□ter□i□e.
C. Withi□ 1□000 feet □f e□d □f ru□way.
EXCEPTI□□□ Auth□ri□ati□□ c□□sidered □□ a case□by□case basis by Airp□rt
5□8 Esc□rts□ Badges and Permits□ Whe□ c□□structi□□ activity is perf□r□ed □□□ad□ace□t
t□ A□A a□d access □□t□ apr□□ required□ the f□□□□wi□g ru□es wi□□ app□y u□□ess
□therwise authori□ed by Airp□rt □perati□□s□
A. Escorts□ Airp□rt □perati□□s □ust esc□rt C□□tract□r vehic□es a□d equip□e□t.
C□□tract□r □ust □bserve a□□ ru□es a□d regu□ati□□s.
EXCEPTI□□□ Vehic□es disp□ayi□g a Per□a□e□t A□A Access deca□ d□ □□t require a□ A□A Badges□
B. A□A Badges□ C□□tract□r pers□□□e□ wi□□ disp□ay A□A Ide□tificati□□ Badge
□perati□g □□ ra□ps.
C. A□A Access Per□it□ C□□tract□r vehic□es wi□□ disp□ay A□A Access Per□it
EXCEPTI□□ C□□structi□□ equip□e□t (tract□rs□ du□p truc□s□ cra□es□ etc.) are □□t □r Te□p□rary A□A Access Per□it.
required t□ disp□ay a□ A□A Access Per□it.
5□9 Pr□tecti□□ □f Airfie□d Areas□ Uti□i□e these pr□cedures t□ preve□t i□adverte□t e□try by
aircraft □r vehic□es i□t□ c□□sed secti□□s □f taxiways□ ru□ways□ □r apr□□s. C□□tract□r
A. Whe□ a□y taxiway □r □ther A□A is c□□sed□ area wi□□ be pr□tected by sha□□ pres
c□□es
ide□tificati□□ Badge.
B. Appropriate □ther A□A Access Per□its will be issued □□ c□□sure a□d ass□ciated □ai□te□a□ce
□r c□□structi□□ activity.
C. Ce□ter□i□e a□d edge □ights wi□□ be tur□ed □ff□ re□□ved□ □b□iterated□ □r
disc□□□ected as dictated by circu□sta□ces requiri□g c□□sure.
D. A□□ excavati□□s i□ existi□g pave□e□t areas (e.g. □ud□ac□i□g repairs) □ust
have h□□e pr□tected by c□□es a□d f□ashi□g □ights□ i□ additi□□ t□ c□□es a□d
□ights □ar□i□g c□□sed area.
E. □a□□r excavati□□s (c□□structi□g □ew taxiways□ ra□ps□ □ther c□□structi□□
activity) □r □a□□r repairs □f existi□g taxiway□ru□way wi□□ be pr□tected by
10□i□ch SPECIAL PROVISIONS□g p□astic□ FAA□appr□ved SP-5 barricades (striped
□ra□ge a□d white) with at □east tw□ red□f□ashi□g □ights □□ t□p □f each
barricade.

F. I□ s□□e cases□ taxiway ce□ter□i□e stripi□g wi□□ be □b□iterated□ a□d a
te□p□rary disp□aced ce□ter□i□e pr□vided.
G. A□□ airfie□d activities □ust be c□□ti□ua□□y c□□rdi□ated thr□ugh Airp□rt
perati□□s Supervis□r.

SP□6 AFFIDAVIT □F BI□□S PAID

Bef□re □w□er's fi□a□ accepta□ce □f this Pr□□ect□ C□□tract□r sha□□ execute a□ affidavit that a□□ bi□□s
f□r □ab□r□ □ateria□s□ a□d i□cide□ta□s i□curred i□ c□□structi□□ □f these i□pr□ve□e□ts□ are paid i□ fu□□□
i□c□udi□g a□y retai□age□ a□d □□ c□ai□s are pe□di□g□ □f which C□□tract□r is □□tified.

SP□7 CA□E□DAR DAY

Ti□e f□r Pr□□ect c□□p□eti□□ a□d □iquidated da□ages sha□□ be i□ acc□rda□ce with pr□visi□□s □f
Ge□era□ C□□diti□□s□ Artic□e GC□32 □ Ti□e f□r C□□p□eti□□ a□d □iquidated Da□ages. A ca□e□dar day is
every day sh□w□ □□□ the ca□e□dar.

SP□8 PR□TECTI□□ □F PR□PERTY

C□□tract□r sha□□ exercise care t□ preve□t da□age t□ a□□ structures□ ab□ve □r be□□w gr□u□d□
i□c□udi□g bui□di□gs□ fe□ces□ pipe□i□es□ uti□ities□ r□ads□ etc.□ pub□ic□y □r private□y □w□ed□ a□d i□c□udi□g
W□r□ perf□r□ed by □thers. C□□tract□r is resp□□sib□e f□r □□cati□g a□□ u□dergr□u□d faci□ities da□aged by
C□□tract□r sha□□ be resp□□sib□e f□r a□□ da□age d□□e t□ either pub□ic □r private pr□p□rty or property during
c□□structi□□ except as specifica□□y pr□vided □therwise i□ these Specificati□□s.
□□□w□ existi□g u□dergr□u□d uti□ities a□d structures are sh□w□ □□ P□a□s. □□cati□□s are be□ieved
reas□□ab□y accurate but □□t guara□teed.
C□□tract□r sha□□ ta□e a□□ steps □ecessary t□ pr□tect existi□g faci□ities duri□g c□□structi□□ t□ assure
c□□ti□u□us □perati□□ □f □ights f□r ru□ways a□d taxiways which wi□□ be □pe□ f□r □ight □perati□□s.

SP□9 E□ECTRIC P□WER A□D □ATURA□ GAS

C□□tract□r sha□□ pr□vide e□ectrica□□ □atura□ gas□ a□d □ther fue□ require□e□ts a□d pay f□r e□ectricity□
gas□ □r fue□ c□□su□ed duri□g Pr□□ect c□□structi□□. C□□tract□r sha□□ c□□struct □w□ service □i□es a□d such
□□structi□□ sha□□ be i□ strict acc□rda□ce with a□□ app□icab□e c□des a□d □aws.

SP□10 □I□ES A□D GRADES

Par□hi□□ wi□□ pr□vide C□□tract□r with h□ri□□□ta□ c□□tr□□ p□i□ts a□d a be□ch□ar□ f□r vertica□
c□□tr□□. C□□tract□r sha□□ d□ a□□ c□□structi□□ sta□i□g. Refere□ces t□ □i□es a□d grades as estab□ished by
Par□hi□□ sha□□ refere□ce these c□□tract□r with a□□ □ecessary i□f□r□ati□□ re□ati□g t□ c□□tr□□ p□i□ts set by
Par□hi□□. C□□tract□r wi□□ be resp□□sib□e f□r □ayi□g □ut W□r□. Par□hi□□ wi□□ chec□ C□□tract□r's grade
c□□tr□□ a□d □a□□r □ay□uts at Par□hi□□'s discreti□□□ but this chec□ wi□□ □□t re□ieve C□□tract□r of
resp□□sibi□ity for correct□y □□cati□g □i□e a□d grade i□ acc□rda□ce with P□a□s a□d Specificati□□s.
Par□hi□□ wi□□ ta□e a□□ □easure□e□ts □ecessary t□ deter□i□e a□□u□t □f W□r□ wh□ch is
satisfactory t□ Par□hi□□ f□r payme□t is pr□vided. Whe□ □ecessary□ W□r□ wi□□ be suspe□ded t□ per□it this W□r□ but
such suspe□si□□ wi□□ be as brief as practicab□e. C□□tract□r sha□□ be a□□□wed □□ extra 06/23 pe□sati□□.

C□□tract□r sha□□ be certai□ as t□ accuracy □f a□□ □easure□e□ts bef□re c□□structi□g a□y per□a□e□t
structure a□d □□t ta□e adva□tage □f a□y err□rs □ade i□ □ayi□g □ut W□r□. C□□tract□r sha□□ scrupu□□us□y
preserve such sta□es□□ar□i□gs as Par□hi□□ □ay set f□r either Par□hi□□ □r C□□tract□r guida□ce. I□ case □f
C□□tract□r □r e□p□□yee □eg□ige□ce resu□ti□g i□ destructi□□ □f such sta□es□□ar□i□gs□ a□ a□□u□tequa□□t□R
the c□st □f rep□aci□g sa□e □ay be deducted fr□□ subseque□t esti□ates due C□□tract□r□ at Par□hi□□□

SP□14 PREVE□TI□□ □F AIR A□D WATER P□□□UTI□□

C□□tract□r sha□□ use suitab□e precauti□□ t□ □i□i□e air a□d water p□□□uti□□ duri□g W□r□ pr□gress.

C□□tract□r sha□□ □eet a□□ EPA require□e□ts c□□cer□i□g air a□d water p□□□uti□□.

C□□tract□r sha□□ [illegible] P□a□ (SWPPP) as required by P□a□s a□d Specificati□□s.

□ateria□s st□red □□ the Airp□rt sha□□ be p□aced a□d W□r□ a□ways c□□ducted t□ cause □□ greater □bstructi□□ t□ air a□d gr□u□d traffic tha□ Par□hi□□ c□□sider □ecessary. I□ pr□tecti□g □perati□□a□ areas□ □i□i□u□ c□eara□ces □ai□tai□ed f□r ru□ways sha□□ agree with Part 77 □f Federa□ Aviati□□ Regu□ati□□s.

Duri□g Pr□□ect c□□structi□□□ C□□tract□r sha□□ a□s□ □ai□tai□ □perati□□a□ safety □□ Airp□rt i□ acc□rda□ce with the FAA Advis□ry Circu□ar 150□5370□2G□ "□perati□□a□ Safety □□ Airp□rts duri□g C□□structi□□" and W5200.5B "Airp□rt Safety duri□g FAA□fu□ded Airp□rt C□□structi□□ a□d FAA Fa□ilities". Wh□□ there hau□i□g is per□itted □□□acr□ss a□y active r□adway□ apr□□□ ru□way□ taxiway□ □ir□raft a□ea□ce." □□ ru□way□ taxiway□ apr□□□ □r r□adway sha□□ be c□□sed □r □pe□ed except by express□y c□□sed sub□ect t□ □pe□i□g □□ sh□rt □□tice. C□□tract□r sha□□ i□□ediate□y per□ove a□y grave□□ dirt□ □r □ther debris.

SP□15 PUBLIC CONVENIENCE AND SAFETY

SP□16 FIELD OFFICE AND STORAGE AREA

As each i□ter□ediate phase □f W□r□ is c□□p□eted a□d bef□re □pe□i□g a□y p□rti□□ □f a□y airfie□d apr□□□ r□adway□ ru□way□ □r taxiway□ C□□tract□r sha□□ be resp□□sib□e f□r c□ea□i□g c□□structi□□ site a□d ad□ace□t pave□e□t as specified.

Up□□ c□□p□eti□□ □f W□r□ a□d bef□re accepta□ce a□d fi□a□ pay□e□t is □ade□ C□□tract□r sha□□ re□□ve fr□□ the site a□□ □achi□ery□ equip□e□t□ surp□us a□d discarded □ateria□s□ rubbish□ a□d te□p□rary structures. □ateria□ c□eared fr□□ site a□d dep□sited □□ ad□ace□t pr□perty wi□□ □□t be c□□sidered satisfact□ry disp□sed. C□ea□up c□st sha□□ be i□c□uded as a part □f c□st □f vari□us ite□s □f W□r□ i□v□□ved with □□ direct c□□pe□sati□□ t□ age□ f□r this W□r□.

SP□17 INSURANCE

C□□tract□r sha□□ □btai□ a□d □ai□tai□ i□sura□ce as required i□ this Pr□ject. C□□tract u□ti□ a□□ i□sura□ce is □btai□ed as required i□ Ge□era□ C□□diti□□s □f C□□tract□ pr□□f □f sa□e is fur□ished t□ □w□er□ a□d □w□er appr□ves. A□□ i□sura□ce required f□r this Pr□ject sha□□ □btai□ a□d □ai□tai□ by C□□tract□r's Pr□tective C□a□ti□□s.

Pub□ic □iabi□ity

I□sura□ce P□□icy □a□i□g the City □f □id□a□d a□d Par□hi□□ as additi□□a□ i□sureds a□d a□□u□t □f p□□icy $1□000□000 f□r i□□uries□ i□c□udi□g accide□ta□ death□ t□ □□e □r □□re pers□□s sha□□ be as f□□□ows, subject t□

- □□ted □i□it f□r each pers□□□ $1□000□000 t□ta□ □i□it f□r a□□ da□ages arisi□g □ut □f b□di□y i□□uries t□ □r
- death □f tw□ □r □□re pers□□s i□ a□y □□e accide□t□
- □i□it □□t □ess tha□ $1□000□000 f□r a□□ da□ages arisi□g □ut □f i□□ury t□ □r destructi□□ □f pr□perty i□ a□y □□e accide□t□ a□d sub□ect t□ that □i□it per accide□t□ a□d $2□000□000 t□ta□ (□r aggregate) □i□it f□r a□□ da□ages arisi□g □ut □f i□□ury t□ □r destructi□□ □f pr□perty duri□g p□□□□□ SPECIAL PROVISIONS

Bef□re W□r□ □□ a□y C□□tract □r subc□□tract begi□s□ C□□tract□r(s) a□d subc□□tract□r(s) sha□□
sub□it seve□ certificates t□ □w□er f□r appr□va□ c□veri□g each i□sura□ce p□□icy carried a□d □ffered as
evide□ce □f c□a pe aa d addics f ted require□e□ts sig□ed by a□ auth□ri□ed represe□tative □f i□sura□ce
c□□pa□y setting forth
- i□sured□□ □f □perati□□s t□ which i□sura□ce applies
- □□□□□ □□□□ □□□□ p□□icy a□d type(s) □f i□sura□ce i□ f□rce thereu□der □□ date b□r□e by such certificate
- p□□icy expirati□□ date a□d □i□it(s) □f □iabi□ity thereu□der □□ date b□r□e by such certificate□
- state□e□t i□sura□ce □f type aff□rded by p□□icy app□ies t□ a□□ □perati□□s □f whatever character the policy may be issued during the term of the Contract provided such insurance is required by the Contract and 10 days thereafter□ a□d
- □□□□□

Up□□ C□□tract□r fai□ure t□ repair satisfact□ri□y □r re□□ve a□d rep□ace□ if s□ directed□ re□ected□
u□auth□ri□ed□ □r c□□de□□ed W□r□ □r □ateria□s i□□ediate□y after receivi□g f□r□a□ □□tice fr□□ Par□hi□□□
□w□er □ay rec□ver f□r such defective W□r□ □r □ateria□s □□ C□□tract□r b□□d□ □r by acti□□ i□ c□urt
havi□g pr□per □urisdicti□□ □ver such □atters□ □r □ay e□p□□y □ab□r□ equip□e□t□ a□d satisfact□ri□y repair
□r re□□ve a□d rep□ace such W□r□ a□d charge c□st □f sa□e t□ C□□tract□r□ which wi□□ be deducted from C□□tract□r dee□s extra c□□pe□sati□□ is due f□r W□r□ □□ □ateria□s □□t c□ear□y a□y □□ver□□e.
C□□tract □□r □rdered by Par□hi□□ as a□ extra□ C□□tract□r sha□□ □□tify Par□hi□□ i□ writi□g □f i□te□ti□□ t□
□a□e a c□ai□ f□r such extra c□□pe□sati□□ bef□re begi□□i□g W□r□ □□ which c□ai□ is based a□d sha□□
aff□rd Par□hi□□ every faci□ity f□r □eepi□g actua□ c□st □f W□r□. C□□tract□r's fai□ure t□ give such □□tificati□□
□r aff□rd Par□hi□□ pr□per faci□ities f□r □eepi□g strict acc□u□t □f actua□ c□sts□ sha□□ c□□stitute a waiver □f
C□ai□'s r□ght to claim such extra c□□pe□sati□□. C□□tract□r's fi□i□g □f such □□tice a□d □eepi□g □f c□sts by Par□hi□□
sha□□ □□t a□y way be c□□strued t□ pr□ve c□□ gress va□idity. Wh□ W□rp□ is c□□p□eted□ C□□tract□r sha□ □f
with as □□ days of the □c□ited States Gover□□e□t say pay□e□t to Pa□ti□□ f□r wh□ we□e t□ pres□. This Act□w□er f□r
C□□gress pr□vides c□□structi□□ W□r□ a□d □ab□r i□ each state sha□□ be i□ acc□rda□ce with □aws □f that
state sub□ect t□ FAA i□specti□□ a□d appr□va□ a□d i□ acc□rda□ce with ru□es a□d regu□ati□□s □ade pursua□t
t□ said Act. C□□structi□□ W□r□□ theref□re□ wi□□ be sub□ect t□ such i□specti□□ by FAA Ad□□istrat□r □f
age□ts as dee□ed □ecessary t□ □eet with require□e□ts whe□ Federa□ fu□ds are used□ but such i□specti□
C□□TRACT□R SHA□□ I□DE□□IFY A□D H□□D HAR□□ESS A□D DEFE□D □W□ER□ PAR□HI□□□ se□se□ a□e the Federa□ G□ver□□e□t a party t□ this C□□tract□r fr□ i□terfere with rights of either party t□ C□□tract.
PR□PERTY DA□AGE□ A□D EXPE□SES □F A□Y CHARACTER WHATS□EVER□ I□C□UDI□G REAS□□AB□E ATT□R□EY FEES□ BR□UGHT F□R□□□ ACC□U□T □F A□Y I□□URIES□DA□AGES RECEIVED□SUSTAI□ED BY A□Y PERS□□(S)□PR□PERTY□ □□ ACC□U□T □F A□Y □EG□IGE□T ACT □F C□□TRACT□R□ AGE□TS□ E□P□□YEES□ □R A□Y SUBC□□TRACT□R□ I□ EXECUTI□□□ SUPERVISI□□□ A□D □PERATI□□S GR□WI□G □UT □F □R I□ A□Y WAY C□□□ECTED WITH PERF□R□A□CE □F THIS C□□TRACT□ A□D C□□TRACT□R IS REQUIRED T□ PAY A□Y □UDG□E□T WITH C□STS □BTAI□ED AGAI□ST □W□ER□ PAR□HI□□□ □R A□Y □FFICERS□ AGE□TS□ □R E□P□□YEES□ I□C□UDI□G REAS□□AB□E ATT□R□EY FEES□
C□□TRACT□R SHA□□ I□DE□□IFY A□D H□□D HAR□□ESS A□D DEFE□D □W□ER A□D A□□ □W□ER'S □FFICERS□ AGE□TS□ A□D E□P□□YEES A□D PAR□HI□□ A□D □FFICERS□ AGE□TS□ A□D E□P□□YEES □F PAR□HI□□ FR□□ A□□ SUITS□ ACTI□□S□ C□AI□S□ DA□AGES□ PERS□□A□ I□□URIES□ ACCIDE□TA□ DEATH□ PR□PERTY DA□AGE□ □□SSES□ A□D EXPE□SES □F A□Y CHARACTER WHATS□EVER□ I□C□UDI□G ATT□R□EY FEES□ BR□UGHT F□R□□□ ACC□U□T □F A□Y I□□URIES□DA□AGES RECEIVED □R SUSTAI□ED BY A□Y PERS□□(S)□PR□PERTY□ □□ ACC□U□T □F A□Y □EG□IGE□T ACT □F □W□ER□ □W□ER'S □FFICERS□ AGE□TS□ A□D E□P□□YEES□ □R □□

SP-21 DISPUTED C□AI□S F□R EXTRA W□R□

SP-22 FEDERAL PARTICIPATI□□

SP-23 I□DE□□IFICATI□□

ACC□U□T □F A□Y □EG□IGE□T ACT □F PAR□HI□□□ □R □FFICERS□ AGE□TS□ A□D E□P□□YEES □F PAR□HI□□ WHETHER SUCH □EG□IGE□T ACTS WERE S□□E PR□XI□ATE CAUSE □F I□□URY□DA□AGE □R A PR□XI□ATE CAUSE □□I□T□Y A□D C□□CURRE□T□Y WITH C□□TRACT□R □R C□□TRACT□R'S E□P□□YEES□ AGE□TS□ □R SUBC□□TRACT□RS □EG□IGE□CE□ I□ EXECUTI□□□ SUPERVISI□□□ A□D □PERATI□□S GR□WI□G □UT □F□I□ A□Y WAY C□□□ECTED WITH PERF□R□A□CE □F THIS C□□TRACT□ A□D C□□TRACT□R IS REQUIRED T□ PAY A□Y □UDG□E□T WITH C□STS WHICH □AY BE □BTAI□ED AGAI□ST □W□ER □R A□Y □FFICERS□ AGE□TS□ □R E□P□□YEES□ I□C□UDI□G REAS□□AB□E ATT□R□EY FEES□

C□□TRACT□R AGREES T□ I□DE□□IFY A□D SAVE □W□ER A□D PAR□HI□□ HAR□□ESS FR□□ A□□ C□AI□S GR□WI□G □UT □F A□Y DE□A□DS □F SUBC□□TRACT□RS□ □AB□RERS□ W□R□□E□□ □ECHA□ICS□ □ATERIA□□E□□ A□D FUR□ISHERS □F □ACHI□ERY A□D PARTS THERE□F□ EQUIP□E□T□ P□WER T□□□S□ A□□ SUPP□IES□ I□C□UDI□G C□□□ISSARY I□CURRED I□ FURTHERI□G PERF□R□A□CE □F THIS C□□TRACT□ WHE□ □W□ER S□ DESIRES□ C□□TRACT□R SHA□□ FUR□ISH SATISFACT□RY EVIDE□CE A□□ □B□IGATI□□S □F □ATURE HEREI□AB□VE DESIG□ATED HAVE BEE□ PAID□ DISCHARGED□ □R WAIVED□

C□□TRACT□R HEREBY WAIVES A□□ RIGHTS T□ A□Y ATT□R□EY FEES AWARDED AS RESU□T □F A□Y ACTI□□ BR□UGHT U□DER THE TEXAS U□IF□R□ DEC□ARAT□RY □UDG□E□TS ACT RE□ATI□G T□ THIS C□□TRACT□

SP□24 C□□TRACT□R RESP□□SIBI□ITY F□R W□R□

U□ti□ accepta□ce by Par□hi□□ □f a□y part □r a□□ c□□structi□□□ as pr□vided f□r i□ these Specificati□□s□
it sha□□ be u□der charge a□d care □f C□□tract□r wh□ sha□□ ta□e every □ecessary precauti□□ agai□st i□□ury
□r da□age t□ a□y part □f W□r□ by acti□□ □f e□e□e□ts □r fr□□ a□y □ther cause whats□ever□ whether arisi□g
fr□□ executi□□□□□□□executi□□ □f W□r□. C□□tract□r sha□□ rebui□d□ repair□ rest□re□ a□d Sa□e-g□ard at□w
SP□25 C□□RRECTI□□ □F FAU□TY W□R□ AFTER FI□A□ PAY□E□T
expe□se□ a□□ i□□uries □r da□age t□ a□y p□rti□□ □f W□r□ □ccasi□□ed by a□y □□ted cause bef□re c□□ip□eti□□ a□d pay□e□t by □w□er t□ C□□tract□r sha□□ □□t re□ieve C□□tract□r □f a□d accepta□□ca□ibi□ity f□r
fau□ty □ateria□s □r w□r□□a□ship. C□□tract□r sha□□ pr□□pt□y rep□ace a□y such defects disc□vered withi□
□□e year fr□□ date □f writte□ accepta□ce i□ Perf□r□a□ce Bf□d sha□□ re□ai□ in effect u□ti□ □□e year after date □f writte□ accepta□ce □f
W□r□ t□ i□sure c□□p□ia□ce by C□□tract□r with require□e□ts □f this Artic□e□
SP□26 TEXAS STATE SA□ES TAX

W□r□ u□der this C□□tract is f□r a□ e□tity which qua□ifies f□r exe□pti□□ pursua□t t□ pr□visi□□s □f
Artic□e 151.309 □f the Texas Tax C□de.
C□□tract□r perf□r□i□g this C□□tract □ay purchase□ re□t□ □r □ease a□□ □ateria□s□ supp□ies□ a□d
equip□e□t i□c□rp□rated i□t□ Pr□□ect by issui□g a□ exe□pti□□ certificate t□ supp□ier i□ □ieu □f tax□ said
exe□pti□□ certificate c□□p□yi□g with State C□□ptr□□□er ru□i□gs. H□wever□ equip□e□t a□d parts f□r
equip□e□t purchased used □□ Pr□□ect but □□t i□c□rp□rated i□t□ Pr□□ect d□ □□t qua□ify f□r said tax

C□□tract□r sha□□ issue a resa□e certificate i□ □ieu □f payi□g such sa□es tax f□r a□□ □ateria□s
i□c□rp□rated i□t□ Pr□□ect. Further□ C□□tract□r sha□□ separate charges f□r □ateria□s
i□c□rp□rated i□t□
Pr□□ect fr□□ charges f□r □ab□r. A□y such exe□pti□□ certificate issued by C□□tract□r i□ □ieu □f
tax sha□□
SP-27 SEPARATE C□□TRACTS
be sub□ect t□ pr□visi□□s □f State C□□ptr□□□er ru□i□gs.

□w□er reserves the right t□ □et □ther c□□tracts ab□ut□□ear Pr□□ect. C□□tract□r sha□□ aff□rd
□ther c□□tract□rs a reas□□ab□e □pp□rtu□ity f□r i□tr□ducti□□ a□d st□rage □f □ateria□s□
executi□□ □f W□r□□
a□d c□□rdi□ate W□r□ with theirs. C□□tract□r c□□rdi□ati□□ with □ther c□□tract□rs sha□□
require Partnership
SP-28 PRE□CH SAFETY
appr□va□. See Artic□e SP□3 f□r additi□□a□ require□e□ts c□□cer□i□g separate C□□tracts.

C□□tract□r sha□□ strict□y c□□p□y with a□□ require□e□ts □f □ccupati□□a□ Safety a□d Hea□th
Ad□i□istrati□□ (□SHA) □a□ua□□ Chapter XVII□ Subpart P □ Excavati□□□ Tre□chi□g a□d Sh□ri□g□ f□r a□□
tre□chi□g□□ excavati□□ perati□□s.

If depths of tre□ches are e□c□u□tered □ver 5 feet□ C□□tract□r sha□□ cut tre□ch wa□□s t□ a□g□e □f
rep□se □f s□i□s e□c□u□tered □r sub□it a□ter□ate sh□ri□g detai□s t□ Par□hi□□ f□r appr□va□.
SP□29 □□AD RESTRICTI□□S

C□□tract□r sha□□ c□□p□y with a□□ □ega□ □□ad restricti□□s i□ hau□i□g □ateria□s □□ pub□ic r□ads bey□□d
□i□its □f W□r□. A specia□ per□it wi□□ □□t re□ieve C□□tract□r □f □iabi□ity f□r da□age which □ay resu□t
fr□□ □quip□e□t, □ater□a□ or equip□e□t.

Equip□e□t, □ater□a□ or equip□e□t of such weight □r s□ □□aded t□ cause da□age t□ structures □r a□y □ther type
□f c□□structi□□ wi□□ □□t be per□itted. Hau□i□g □ateria□s □ver base c□urse is □□t per□itted. Hau□i□g
□ateria□s □ver base □r surface c□urse u□der c□□structi□□ sha□□ be □i□ited as directed. □□ □□ads wi□□ be
per□itted □□ c□□crete pave□e□t□ base□ □r structure bef□re curi□g peri□d expirati□□. C□□tract□r sha□□ be
resp□□sib□e f□r a□□ da□age d□e by hau□i□g equip□e□t a□d sha□□ c□rrect such da□age at □w expe□se.
SP-30 □TIGE T□ PR□CEED
C□□tract□r sha□□ □□tify Par□hi□□ at □east 24 h□urs i□ adva□ce □f ti□e actua□ c□□structi□□ □perati□□s
wi□□ begin.
a□d fr□□ which date C□□tract ti□e wi□□ be charged. C□□tract□r sha□□ begi□ W□r□ t□ be perf□r□ed u□der
C□□tract withi□ 10 days □f date set by Par□hi□□ i□ writte□ □□tice t□ Pr□ceed□ but i□ a□y eve□t□
C□□tract□r
SP-31 PAY□E□T F□R □ATERIA□S □□ HA□D
sha□□ □□tify Par□hi□□ at □east 24 h□urs i□ adva□ce □f ti□e actua□ c□□structi□□ □perati□□s wi□□ begin.

Partia□ pay□e□ts □ay be □ade t□ exte□t □f de□ivered c□st □f □ateria□s t□ i□c□rp□rate i□ W□r□□ if
such □ateria□s □eet require□e□ts □f C□□tract□ P□a□s□ a□d Specificati□□s a□d are de□ivered t□ acceptab□e
sites □□ Airp□rt pr□perty □r □ther sites i□ the vici□ity acceptab□e t□ □w□er. Such de□ivered c□sts □f st□red
□r st□c□pi□ed □ateria□s □ay be i□c□uded i□ □ext partia□ pay□e□t after these c□□diti□□s are □et□

A. □ateria□s furnished Par□hi□ with satisfact□ry proof□ a□d a□ appr□priate c□sts
B. Have been paid□ Par□hi□ with acceptable evidence of payment□ and □f such
ite□s of □ater□a□ requested □□ partia□ pay□e□t request.

D. C□□tract□r fur□ished □w□er □ega□ tit□e (free □f □ie□s□e□cu□bra□ces □f a□y □i□d) t□
□ateria□ s□ st□red□st□c□pi□ed.

E. C□□tract□r fur□ished □w□er evide□ce □ateria□ st□red□st□c□pi□ed is i□sured agai□st □□ss
by da□age t□ r disappeara□ce f such □ateria□s a□y ti□e bef□re use i W□r□. □□ Tra□sfer f tit□e a□d w□er's pay□e□t f□r such st□red st□c□pi□ed materia□s shall □□ way re□ieve

C□□tract□r □f resp□□sibi□ity f□r fur□ishi□g a□d p□aci□g such □ateria□s i□ acc□rda□ce with require□e□ts □f
C□□tract □ P□ass wi□ d Specificati□ f partia□ pay□e□ts f□r □ateria□s □□ ha□d exceed C□□tract price f□r such
□ateria□s □r C□□tract price f□r C□□tract ite□ i□ which □ateria□ is i□te□ded f□r use.

□□ partia□ pay□e□t □ade f□r st□red□st□c□pi□ed □ivi□g □r perishab□e p□a□t □ateria□s.

C□□tract□r bears a□□ c□sts ass□ciated with partia□ pay□e□t □f st□red□st□c□pi□ed □ateria□s i□
acc□rda□ce with pr□visi□□s □f this subsecti□□. See a□s□ SP□52 "Partia□ Pay□e□ts" a□d GC□46 "Partia□
Pay□e□ts."

SP-32 WEIGHI□G A□D □EASURI□G EQUIP□E□T

Except as □□dified herei□□ a□□ sca□es a□d sca□e i□sta□□ati□□s sha□□ □eet require□e□ts □f the □ati□□a□
I□stitute □f Sta□dards a□d Tech□□□□gy Ha□db□□□s 44 a□d 112 (pub□ished by U.S. Depart□e□t □f
C□□□erce a□d avai□ab□e fr□□ Superi□te□de□t □f D□cu□e□ts□ U.S. G□ver□□e□t Pri□ti□g □ffice□
Washi□gt□□□ D.D. 20402□9325)□ except required accuracy sha□□ be 0.4 perce□t □f □□ad weighed □r □□□
graduat□d □ hi□ the sca□e dia□. C□□tract□r sha□□ pr□vide pers□□□e□□ faci□ities□ a□d equip□e□t □r
□□□ checki□g accuracy□adequacy□ a□d at □east □□ce each six □□□ths. C□□tract□r sha□□ furnish a
sui□ab□e quantity of test weights and certified weights a□d appr□ved by Par□hi□□□ certifyi□g sca□es □eet require□e□ts □f this ite□. P□a□
Par□hi□□ satisfacti□□.

Operati□□s sha□□ cease duri□g chec□i□g □perati□□. Whe□ i□accuracy□i□adequacy is disc□vered□ d□ □□t
resu□e sca□e use u□ti□ cg□rrective □easures are c□□p□ete a□d □r sca□es ca□ibrated. Whe□ equip□e□t is
adjusted□ □□□ tract□r sha□□ rep□rt ca□ibrati□□ fr□□ a sca□e □echa□ic □ice□sed by the Texas Depart□e□t □f Agricu□ture usi□g
certified weights a□d appr□ved by Par□hi□□□ certifyi□g sca□es □eet require□e□ts □f this ite□. P□a□
Par□hi□□ satisfacti□□.

SP-33 PR□GRESS SCHEDU□E

Within 15 w□ri□g days after award □f C□□tract (□r at Prec□□structi□□ □eeti□g)□ C□□tract□r sha□□
submit Pr□gress schedu□e as practicable□ Pr□gress schedu□e shall be prepared i□ a suitab□e t□ sh□w pr□p□sed starti□g a□d c□□p□eti□□ dates f□r each phase □f c□□structi□□ as we□□ as each ite□ □f W□r□
within each phase. Pr□gress schedu□e sha□□ i□c□ude a "Perce□t C□□p□ete Curve" with □□□th□y a□□u□t□
cu□u□ative t□t□l a□d cu□u□ative perce□t. Pr□gress schedu□e□ if suitab□e a□d i□dicates certai□ Pr□□ect
c□□p□eti□□ a□d □□□ved f□r specific ite□s of W□r□ □□□ Pr□ect sha□ i□c□ude u□bet□ca□e□dar days
Revisi□ns sha□ be□ submitted i□ a□y□ proposed□ □□□ays due t□ weather a□□□wed u□ti□ a□d
u□□ess such de□ays exceed c□ai□s f□r exte□si□□ □f ti□e because □f ab□□r□a□ i□c□e□e□t weather. Such
exte□si□□ □f ti□e sha□□ be gra□ted □□□y because such ab□□r□a□ i□c□e□e□t weather preve□ted 0107618. □f
06/23 r ite□s □f W□r□ □□ □□r□a□ w□r□i□g days. Weather c□□diti□□s □□ a particu□ar day □ay affect W□r□

SP-34 AVERAGE C□I□ATIC RA□GE

Ti□e a□□wed f□r □□□p□eti□□ of the specified ti□e w□□ be appr□ved i□ writi□g by Par□hi□ □a□e□dar days
□□□ays□ □□□ chargesi□ □□□ays□ □□□ □□□ □□

□□ days f□□□□wi□g the □□r□a□ weather day. This subseque□t de□ay sha□□ □□t be c□□sidered ab□□r□a□ a□d
□□ exte□si□□ □f ti□e wi□□ be c□□sidered.

The f□□□□wi□g weather tab□e ref□ects □ete□r□□□gica□ data fr□□ □id□a□d□□dessa area a□d wi□□ be used t□ deter□i□e C□□tract ti□e exte□si□□s due t□ ab□□r□a□□y i□c□e□e□t weather. F□r purp□ses □f this C□□tract□ "ab□□r□a□□y i□c□e□e□t weather" is i□terpreted as □u□ber □f days □□re tha□ □□r□a□ □u□ber □f days □□ which rai□fa□□ exceeds 0.01 i□ch□ □r s□□w□ice pe□□ets exceed 1.0 i□ch. Exte□si□□s □f ti□e t□ c□□p□ete W□r□ wi□□ be based □□ ca□□ e□ Rai days a□d graded by PE th□ acc□u□t. □□ "rai□ days" u□used f□r previ□us □□□ths □a□ be carried □ver □r acc□u□tab□e f□r future peri□ds □f ti□e.

	□EA□ □□□ F□AI DAYS[1]	□EA□ □□□ □F SNOW/ICE PE□□ETS DAYS[2]
January	3	0
February	WEATHER TAB□E	0
□arch	4	0
Apri□	3	0
□ay	5	0
□u□e	5	0
□u□y	4	0
August	5	0
Septe□ber	7	0
□ct□ber	3	0
□□ve□ber	3	0
Dece□ber	3	0
T□TA□	48	0

[1] □ea□ □u□ber □f days' rai□fa□□□ 0.01 i□ch □r □□re.
[2] □ea□ □u□ber □f days' 1.0 i□ch □r □□re.
□ □ess tha□ 0.5 i□ch.

Tab□e based □□ i□f□r□ati□□ rep□rted fr□□ □AF□ □id□a□d□ Texas. □atitude 31 degrees□ 56 □i□utes □ □□□gitude□ 102 degrees 12 □i□utes W□□□ evati□□ (gr□□nd) 2,862 feet. Wea□s are based (gr□□ rec□)rds c□v□r□g 10 years fr□□ 2012□2021.

SP□35 SUBSTA□TIA□□Y C□□P□ETE

I□ vari□us specificati□□s "Substa□tia□□y C□□p□ete" is used. Defi□iti□□ sha□□ be□

"Substa□tia□□y c□□p□ete sha□□ □ccur at ti□e W□r□ t□ be c□□p□eted is c□□p□ete as specified a□d □w□er accepts□□ccupies faci□ity□i□pr□ve□e□t. A□□ equip□e□t
Tra□s□it each sub□itta□ with C□□tract□r sta□dard tra□s□itta□ □□tter i□c□udi□g accepta□ce a□d use□a□d accepted by □w□er bef□re W□r□ is defi□ed as substa□tia□□y c□□p□ete."

SP□36 SUB□ITTA□S

Ha□e□ c□□p□ete□y i□sta□□ed, tested□ ready f□r □w□er address□ a□d ph□□e □u□ber. Ide□tify Pr□□ect□ C□□tract□r□ sube□□tract□r□ □r supp□ier□ perti□e□t Drawi□g sheet a□d detai□ □u□ber(s)□ a□d Specificati□□ Secti□□ □u□ber□ as appr□priate. App□y C□□tract□r sta□p□ sig□ed□i□itia□ed certifyi□g review□ verificati□□ □f Pr□ducts required□ fie□d di□e□si□□s□ ad□ace□t c□□structi□□ W□r□□ a□d c□□rdi□ati□□ □f i□f□r□ati□□□ are i□ acc□rda□ce with require□e□ts □f W□r□ a□d C□□tract D□cu□e□ts. Schedu□e sub□itta□s t□ expedite Pr□□ect a□d de□iver t□ Par□hi□□ via the Pa□□ re□ website (except f□r pr□duct sa□p□es □ai□ed t□ Par□hi□□'s physica□ address). C□□rdi□ate sub□issi□□ □f re□ated ite□s. Ide□tify variati□□s fr□□ C□□tract D□cu□e□ts a□d pr□duct□syste□ □i□itati□□s detri□e□ta□ t□

successfu□ perf□r□a□ce □f c□□p□eted W□r□. Par□hi□□ Pr□□ect C□□rdi□at□r (PC) sha□□ distribute reviewed
sub□itta□s t□ c□□cer□ed parties via the Pr□c□re website i□structi□g parties t□ pr□□pt□y rep□rt a□y i□abi□ity t□ c□□p□y with pr□□is□s. Pr□cess f□r□at as f□□□□ws□

- Digita□□y up□□ad a□□ sub□itta□s usi□g PDF fi□e exte□si□□. Each sub□itta□ sha□□ be a fi□e i□c□udi□g tra□s□itta□ □etter. □u□tip□e fi□es f□r the sa□e sub□itta□ wi□□ □□t be accepted.
- Sub□itta□s □□□□□

SP□39 G□VER□I□G □AW A□D VE□UE

This C□□tract sha□□ be g□ver□ed by □aws □f the State □f Texas. A□□ perf□r□a□ce a□d pay□e□t □ade
pursua□t t□ this C□□tract sha□□ be dee□ed t□ have □ccurred i□ □id□a□d C□u□ty□ Texas. Exc□usive ve□ue
f□r a□y c□ai□s□ suits□ □r □ther acti□□ arisi□g fr□□ □r c□□□ected i□ a□y way t□ this C□□tract □r perf□r□a□ce
□f this C□□tract sha□□ be i□ □id□a□d C□u□ty□ Texas. □b□igati□□s a□d u□derta□i□gs □f each party t□ this
C□□tract sha□□ be dee□ed t□ have □ccurred i□ □id□a□d C□u□ty□ Texas. This C□□tract sha□□ be g□ver□ed
by □ 1terpreted □ e□f□rced □a□d c□□□strued u□der the □aw □f the State □f Texas. □aws □f the State □f Texas
sha□□ g□ver□ c□□□strue□ a□d e□f□rced.

SP□40 THIRD PARTY BE□EFICIARY

This C□□tract d□es □□t create a third party be□eficiary □r is there a third party be□eficiary t□ □i□ited this t□rt c□ai□s
a□d tract. C□□ persua□□ e□ity□r□ party t□ this C□□tract sha□ ha□e a□y third party be□eficiary app□icati□□
rights under ther □urisdicti□□.

SP□41 RE□EASES

□□TWITHSTA□DI□G A□Y □THER PR□VISI□□S□ C□□tract□r hereby re□eases□ acquits□ RE□I□QUISHES□ a□d f□rever discharges □W□ER□ □w□er's e□p□□yees a□d □fficers□ a□d
PAR□HI□□□ a□d its e□p□□yees a□d □fficers□ fr□□ a□y a□d a□□ de□a□ds□ c□ai□s□ DA□AGES□ □r
causes □f acti□□ □f a□y □i□d whats□ever which C□□tract□r has□□ight have i□c□udi□g but □□t □i□ited
t□ BREACH □F C□□TRACT□ QUA□TU□ □ERUIT□ C□AI□S U□DER DUE PR□CESS A□D
SP□42 DISCLOSURES REGARDING THE TEXAS DEPARTMENT OF TRANSPORTATION
C□AI□S□ R□W□ER □EG□IGE□CE□
herei□ as a□ i□depe□de□t c□□tract□r a□d □□t as a□ □fficer□ age□t□ serva□t□ □r e□p□□yee □f □w□er□ that
C□□tract□r sha□□ have exc□usive c□□tr□□ □f a□d exc□usive right t□ c□□tr□□ detai□s □f services a□d w□r□
perf□r□ed hereu□der□ a□d a□□ pers□□s perf□r□i□g the sa□e□ a□d sha□□ be s□□e□y resp□□sib□e f□r acts a□d
□□issi□□s □f its □fficers□ age□ts□ e□p□□yees□ c□□tract□rs a□d subc□□tract□rs□ that the d□ctri□e □f
resp□□de□t superi□r sha□□ □□t app□y as betwee□ □w□er a□d C□□tract□r□ its □fficers□ age□ts□ e□p□□yees□
c□□tract□rs a□d subc□□tract□rs□ a□d that □□thi□g herei□ sha□□ be c□□strued as creati□g a part□ership □r
□□i□t e□terprise betwee□ □w□er a□d C□□tract□r. □□ pers□□ perf□r□i□g a□y w□r□ a□d services described
hereu□der by C□□tract□r sha□□ be c□□sidered a□ □fficer□ age□t□ serva□t□ □r e□p□□yee □f □w□er. Further□
it is specifica□□y u□derst□□d a□d agreed that □□thi□g i□ this c□□tract is i□te□ded □r sha□□ be c□□strued as
creati□g a "C□□□u□ity □f Pecu□iary I□terest" □r "A□ Equa□ Right □f C□□tr□□" which w□u□d give rise t□
vicari□us □iabi□ity. C□□tract□r sha□□ be a□ i□depe□de□t c□□tract□r u□der this C□□tract a□d sha□□ assu□e a□□
rights□ □b□igati□□s□ a□d □iabi□ities app□icab□e t□ it as such i□depe□de□t c□□tract□r. □w□er d□es □□t have
the power□ t□ direct the □rder w□r□ is SPECIAL PROVISIONS t have the right t□ c□□tr□□ □□ea□s□ 06□3 □ds□ □r
detai□s □f C□□tract□r's w□r□. C□□tract□r sha□□ assu□e exc□usive resp□□sibi□ity f□r w□r□. C□□tract□r is
e□tire□y free t□ d□ w□r□ i□ its □w□ way.

SP□43 □□TICE □F A□□EGED BREACH□ STATUT□RY PREREQUISITES

As a c□□diti□□ precede□t t□ fi□i□g suit f□r a□□eged da□ages i□curred by a□ a□□eged breach □f a□
express □r i□p□ied pr□visi□□ □f this C□□tract□ C□□tract□r □r □ega□ represe□tative sha□□ give City □a□ager□
□r □ther reas□□ab□e □fficia□ □f □w□er□ □□tice i□ writi□g (c□□sisti□g □f □□e □rigi□a□ a□d seve□ c□pies □f
□□tice attached t□ C□□tract) □f such da□ages□ du□y verified□ withi□ 150 days after sa□e has bee□
sustai□ed. Disc□very ru□e d□es □□t app□y t□ givi□g this □□tice. □□tice sha□□ i□c□ude whe□□ where□ a□d
h□w da□ages □ccurred□ appare□t exte□t there□f□ a□□u□t □f da□ages sustai□ed□ a□□u□t f□r which
C□□tract□r wi□□ sett□e□ physica□ a□d □ai□i□g addresses □f C□□tract□r at ti□e a□d date c□ai□ was prese□ted
as we□□ as physica□ a□d □ai□i□g addresses □f C□□tract□r f□r six □□□ths i□□ediate□y precedi□g □ccurre□ce.

Statut□ry prerequisites □ut□i□ed herei□ c□□stitute □urisdicti□□a□ require□e□ts □f such pursuants t□ a□d □a□es a□d addresses □f wit□esses up□□ wh□□ C□□tract□r re□ies t□ estab□ish 271.154. □f the Texas □□ca□ G□ver□□e□t C□de a□d Secti□□ 311.034 □f the Texas Gai□ver□ t□e t□tify City □a□ager withi□ ti□e a□d □a□□er pr□vided herei□ sha□□ ex□□erate□ C□□tract□r fr□□ a□y □iabi□ity whats□ever. □w□er is u□der □□ □b□igati□□ t□ pr□vide □□tice t□ C□□tract□r's de□□tice is i□sufficie□t. □w□er reserves the right t□ request reas□□ab□e additi□□a□ i□f□r□ati□□ sha□□ be supp□ied withi□ 30 days after receipt □f w□itte□ □otice □f said d□fici□□cies□ □□□ess C□□tract□r agrees t□ a□ extensi□□ □f this ti□e□ C□□tract□r's de□□tice right□ □□ pursua□t t□ Secti□□ 311.034 □f the Texas G□ver□□e□t C□de□ regard□ess if □w□er has actua□ k□owledge □f said d□fici□□cies□ □□□ess C□□tract□r agrees t□ a□ extensi□□ □f this ti□e□ C□□tract□r's de□□tice right□ are perma□e□t□y waived

THIS SECTI□□ SHA□□ □□T BE C□□STRUED□I□TERPRETED AS A WAIVER □F S□VEREIG□ I□□U□ITY.

C□□TRACT□R A□D □W□ER ARE RE□YI□G □□ THEIR □W□ □UDG□E□T. EACH PARTY HAD THE □PP□RTU□ITY T□ DISCUSS THIS C□□TRACT WITH C□□PETE□T □EGA□ C□U□SE□ PRI□R T□ EXECUTI□□.

SP□46 PR□□PT PAY ACT

□w□er a□d C□□tract□r agree Texas G□ver□□e□t C□de□ Chapter 2251□ Pay□e□t f□r G□□ds a□d
Services (the "Pr□□pt Pay Act") d□es □□t waive g□ver□□e□ta□ i□□u□ity.

SP□47 PAY□E□T

After C□□tract□r c□□p□etes a□□ W□r□ i□c□udi□g a□□ Cha□ge □rders a□teri□g □rigi□a□ sc□pe□ a□□u□t
□f said C□□tract are c□□p□eted□ a□d □w□er i□spected a□d appr□ved that W□r□ is c□□p□eted a□d i□
c□□p□ia□ce with C□□tract a□d a□□ subseque□t Cha□ge □rders□ □w□er □ay thereafter issue pay□e□t t□
C□□tract□r i□ a□□u□t □f C□□tract a□d a□□ Cha□ge □rders. □w□er sha□□ be the fi□a□ □udge □f whe□
C□□tract□r c□□p□etes W□r□. □w□er□ at s□□e discreti□□□ sha□□ deter□i□e if W□r□ u□der
□□□tract a□d □der
a□y Cha□ge □rders was d□□e t□ □w□er require□e□ts. □w□er □ay □a□e peri□dic pay□e□ts t□
C□□tract□r f□r W□r□ that has been d□□e satisfactorily. Any such perif idic pay□e□ts □ay □□□y be □ade pursua□t t□ this Artic□e a□d □□□y after a□□ h□wever□ b□□ sutch perif idic pay□e□ts □ay □□□y be □ade pursua□t t□ this Artic□e a□d □□□y after a□□ Wisted la□d w. Fi□a□ pay□e□t □□t appr□ved u□ti□ Par□hi□□ appr□ves C□□tract□r's fi□a□ Cha□ige □rders and receives two copies of all manufacturer warranties specified for materials, equipment, and sha□□□ installations.

- provide weekly payroll records (not previously received) from General Contractor and all subcontractors.
- complete final cleanup. Upon completion of Work and before acceptance and final payment is made, Contractor shall remove from site all machinery, equipment, surplus and discarded materials, rubbish, temporary structures, and stumps or portions of trees. Contractor shall cut all brush and woods within limits indicated and leave site neat and presentable. Material cleared from site and deposited on adjacent property will not be considered as having been disposed satisfactorily unless Contractor obtained written permission of such property owner.
- complete all punch list items identified during Final Inspection.
- provide complete release of all claims for labor and material arising out of Contract.
- provide a certified statement signed by subcontractors indicating actual amounts paid to Disadvantaged Business Enterprise (DBE) subcontractors and/or suppliers associated with Project.
- return copies of sales tax completion forms when applicable per state requirements.
- provide manufacturer certifications for all items incorporated in Work.
- make all required Record, As-Built, or As-Constructed Drawings available.
- deliver Project Operation and Maintenance (O&M) Manual(s).
- provide Security for Construction Warranty.
- submit equipment commissioning documentation, if required.

SP□49 DISC□□SURE □F I□TERESTED PARTIES

Successfu□ pr□p□ser wi□□ be required t□ c□□p□ete Texas Ethics C□□□issi□□
F□r□ 1295□Certificate □f I□terested Parties a□d sub□it c□□p□eted f□r□ with executed C□□tracts f□r https□□□www.ethics.state.tx.us□fi□i□gi□f□□
Pr□□ect.95□□p□ete F□r□ 1295 □□□i□e at the Texas Ethics website□
Par□hi□□ wi□□ e□ai□ □i□□s t□ C□□tract□r with a□ exp□a□ati□□ □□ce C□□tract is awarded. C□□tract□r
is resp□□sib□e f□r c□□p□eti□g f□r□□ pri□ti□g□ a□d sub□itti□g a□□□g with a□□ □ther required C□□tract
d□□cu□e□ts.

SP□50 PAR□HI□□□RPR AUTH□RITY A□D DUTY

Par□hi□□ □□r RPR sha□□ supervise□ direct□ □r have c□□tr□□ □ver C□□tract□r's W□r□ resp□□sibi□ity f□r c□□structi□□ □ea□s□ □eth□ds□ tech□iques□ seque□ces□ □r pr□cedures se□ected by
C□□tract□r □□r f□r C□□tract□r's safety precauti□□s □r pr□gra□s i□ c□□□ecti□□ with W□r□. These rights
a□d resp□□sibi□ities are s□□e□y the resp□□sib□e f□r□ y acts□□ issi□□s□f C□□tract□r□ subc□□tract□r□ e□tity
perf□r□i□g a□y p□rti□□s □f W□r□□ □r age□ts □r e□p□□yees □f a□y □f the□. Par□hi□□ □□r RPR guara□tee
C□□tract□r perf□r□a□ce □□r are resp□□sib□e f□r C□□tract□r's fai□ure t□ perf□r□ W□r□ i□ acc□rda□ce with
C□□tract D□cu□e□ts □r a□y app□icab□e □aws□ c□des□ ru□es□ □r regu□ati□□s.

SP-51 ANTI□B□YC□TT STATUTES

T□ the exte□t that Secti□□s 2271.002 a□d 2274.002 □f the Texas G□ver□□e□t C□de (ti□□ B□yc□tt Statutes") app□y t□ this C□□tract□ C□□tract□r hereby verifies□ the "A□ti

- that C□□tract□r d□es □□t b□yc□tt Israe□ a□d wi□□ □□t b□yc□tt Israe□ duri□g the ter□ □f this C□□tract□ a□d
- that C□□tract□r d□es □□t b□yc□tt e□ergy c□□pa□ies a□d wi□□ □□t b□yc□tt e□ergy c□□pa□ies duri□g the ter□ □f this C□□tract□ a□d
- that C□□tract□r d□es □□t have a practice□ p□□icy□ guida□ce□ □r directive that discri□i□ates agai□st a firear□ e□tity □r firear□ trade ass□ciati□□ a□d wi□□ □□t discri□i□ate duri□g the ter□ □f this C□□tract□ a□d

T□ the extent that the A□ti□B□yc□tt Statutes d□ □□t app□y t□ this C□□tract□ such verificati□□ is □□t required□ a□d C□□tract□r sha□□ be dee□ed t□ have □□t □ade such verificati□□.

SP-52 PARTIAL PAYMENTS

Partia□ Pay□e□ts wi□□ be □ade t□ C□□tract□r at □east □□ce each □□□th as w□r□ pr□gresses. Said pay□e□ts wi□□ be based up□□ esti□ates□ prepared by C□□tract□r f□r Architect□E□gi□eer review□ □f the va□ue □f w□r□ perf□r□ed a□d □ateria□s c□□p□ete a□d i□ p□ace□ i□ acc□rda□ce with C□□tract□ P□a□s□ a□d Specificati□□s. Such partia□ pay□e□ts □ay a□s□ i□c□ude de□ivered actua□ c□st □f th□se □ateria□s 1) Fr□□ the t□ta□ a□□u□t deter□i□ed payab□e □□ a partia□ pay□e□t□ □w□er st□c□pi□ed a□d st□red i□ acc□rda□ce with C□□structi□□ C□□tract require□e□ts. □□ partia□ pay□e□t wi□□ be a□d retai□ 5% □f such t□ta□ a□□u□t t□ pr□tect □w□er i□terests. U□□ess □w□er □ade whe□ a□□u□t due C□□tract□r si□ce □ast esti□ate is □ess tha□ $500. it □therwise□ a□□u□t □w□er retai□s wi□□ be i□ effect u□ti□ fi□a□ pay□e□t is □ade except□

a. C□□tract□r □ay request re□ease □f retai□age □□ w□r□ partia□□y accepted by □w□er i□ acc□rda□ce with C□□structi□□ C□□tract require□e□ts. C□□tract□r □ust pr□vide a certified i□v□ice t□ □w□er t□ supp□rt retai□age va□ue he□d by □w□er f□r partia□□y accepted w□r□.

2) C□□tract□r is required t□ pay a□□ subc□□tract□rs f□r satisfact□ry perf□r□a□ce □f their c□□tracts □□ □ater tha□ 30 days after C□□tract□r received partia□ pay□e□t. C□□tract□r □ust pr□vide □w□er evide□ce □f pr□□pt a□d fu□□ retai□age pay□e□t he□d by pri□e C□□tract□r t□ subc□□tract□r withi□ 30 days after subc□□tract□r w□r□ is satisfact□ri□y

3) c□□p□eted. Subc□□tract□r w□r□ is satisfact□ri□y c□□p□eted whe□ a□□ tas□s ca□□ed f□r i□ subc□□tract are acc□□p□ished a□d d□cu□e□ted as □w□er requires. Whe□ □w□er i□cre□e□ta□□y accepts a p□rti□□ □f a pri□e c□□tract□ subc□□tract□r w□r□ c□vered by that accepta□ce is dee□ed satisfact□ri□y c□□p□eted.

It is u□□□

GE□ERA□ C□□DITI□□S □F C□□TRACT

GC□01□ □W□ER

Whe□ "□w□er□" "Party □f the First Part□" □r "First Party" are used i□ D□cu□e□ts□ it sha□ refer t□ □w□er as described i□ C□□tract□

GC□02□ C□□TRACT□R

Whe□ "C□□tract□r□" "Party □f the Sec□□d Part□" □r "Sec□□d Party□" are used□ □ea□ pers□□(s) sha□ □part□ership□ □r c□rp□rati□□ s□ defi□ed i□ C□□tract wh□ agreed t□ perf□r□ W□r□ e□braced i□ this C□□tract□ □r t□ □ega□ represe□tatives□

GC□03□ ARCHITECT□E□GI□EER

Whe□ "Architect□E□gi□eer" is used i□ this C□□tract□ it sha□□ refer t□ Architect□E□gi□eer□ Partnership□ □r such □ther Architect□E□gi□eer□ supervis□r□ □r i□spect□r□ as auth□ri□ed by said □w□er□ t□ act as □w□er's represe□tative with respect t□ services perf□r□ed □r fur□ished by Architect□E□gi□eer□

GC□04□ C□□TRACT D□CU□E□TS

C□□tract D□cu□e□ts sha□□ c□□sist □f □□tice t□ Bidders (Advertise□e□t)□ Bidders□ Pr□pI□structisig□sed C□□tract□ Perf□r□a□ce B□□d□ Pay□e□t B□□d□ Ge□era□ C□□diti□□s □f the C□□tract□ Specia□ Pr□visi□□s□ Tech□ica□ Specificati□□s□ P□a□s□ a□d a□□ □□dificati□□s there□f i□c□rp□rated i□ a□y d□cu□e□ts be□re execute□ts are C□□tract D□cu□e□ts□ as listed□ C□□tract D□cu□e□ts□ i□ c□□pri□e□tary a□d ca□□ed f□r by a□y □□e pers□□□e□tity sha□□ be as bi□di□g as if ca□□ed f□r by a□□□ I□ case □f c□□f□ict betwee□ C□□tract D□cu□e□ts□ pri□rity □f i□terpretati□□ sha□□ be i□ the f□□□□□ □rder:

1□ Awarded Bid
2□ Perf□r□a□ce B□□d□
3□ Special C□□diti□□s (if a□y)□
4□ Pr□p□sa□□
5□ Specia□ Pr□visi□□s□
6□ Instructi□□s to Bidders□
7□ Ge□era□ C□□diti□□s □f the C□□tract□
8□ Tech□ica□ Specificati□□s□
9□ Pa□s□ a□d Drawi□gs□
10□ Addenda (□ewest to □□der)

GC□05□ SUBC□□TRACT□R

"Subc□□tract□r□" as e□p□□yed herei□□ i□c□udes □□□y th□se with a direct c□□tract with a□ Subc□□tract□r a□d i□ c□□tract with □e wh□ fur□ished □ateria□ w□r□ed t□ a specia□ desig□ acc□rdi□g t□ p□a□s □r Specificati□□s □f this W□r□ but d□es □□t i□c□ude □□e wh□ □ere□y fur□ished □ateria□ □□t s□ w□r□ed□

GC□06□ WRITTE□ □□TICE

Writte□ □□tice sha□□ be dee□ed t□ be du□y served if de□ivered i□ pers□□ t□ □e□ber □f firi□ □r □ffi□er □f c□rp□rati□□ i□te□ded□ □r if de□ivered□se□t by registered □ai□ t□ □ast busi□ess address □□□w□□

GC□07□ W□R□

U□□ess □therwise stipu□ated□ C□□tract□r sha□□ pr□vide a□d pay f□r a□□ □achi□ery□ equi□□□□t□□□□□ materia□s□ supps□ies□ superi□te□de□ce□ □ab□r□ i□sura□ce□ water□ □ight□ p□wer□ fue□□ tra□sp□rtati□□□ a□d □ther faci□ities □ecessary f□r executi□□ a□d c□□p□eti□□ □f W□r□ c□vered by C□□tract D□cu□e□ts□

U□□ess □therwise specified□ a□□ □ateria□s sha□□ be □ew a□d b□th w□r□□a□ship a□d satisfa□t□ry□ f□g□□d

qua□ity□ C□□tract□r sha□□□ if required□ fur□ish satisfact□ry evide□ce as t□ □i□d a□d qua□ity □f □ateria□s□

□ateria□s □r W□r□ described i□ w□rds sha□□ have a we□□□□□□w□ tech□ica□ □r trade □ea□i□g a□d he□d t□ refer t□ such rec□g□□ed sta□dards□

GC□08□ DE□ETED

GC□09□ DE□ETED

GC□10□ □AY□UT □F W□R□

Except as specifica□□y pr□vided herei□□ C□□tract□r sha□□ be resp□□sib□e f□r W□r□ a□d acc□ayi□g□shut W□r□ as acceptab□e t□ Architect□E□gi□eer□ Architect□E□gi□eer wi□□ chec□ C□□tract□r's □ay□ut □f a□□ □a□□r structures a□d □ther □ay□ut w□r□ d□□e by C□□tract□r at C□□tract□r request□ but this chec□ d□es □□t re□ieve C□□tract□r □f resp□□sibi□ity □f c□rrect□y □□cati□g a□□ W□r□ i□ acc□rda□ce with P□□ass a□d Specifications□

GC□11□ ARCHITECT□E□GI□EER AUTH□RITY A□D DUTY

Architect□E□gi□eer□ □□ass a□d Specifications□ it is □utua□□y agreed betwee□ parties t□ this C□□tract that Architect□E□gi□eer sha□□ observe qua□ity a□d pr□gress □f W□r□ at vari□us ti□es□ T□ preve□t de□ays□ disputes□ a□d disc□urage □itigati□□□ it is further agreed Architect□E□gi□eer sha□□□ i□ a□□ cases□ deter□i□e a□□u□ts a□d qua□tities □f severa□ □i□ds □f W□r□ paid u□der this C□□tract□ He sha□□ deter□i□e a□□ questi□□s i□ re□ati□□ t□ said W□r□ a□d c□□structi□□ there□f□ a□d i□ a□□ cases□ decide every questi□□ which □ay arise re□ative t□ executi□□ □f this C□□tract □□ part □f said C□□tract□r□ Architect□E□gi□eer esti□ates a□d fi□di□gs sha□□ be c□□diti□□s precede□t t□ right □f parties heret□ t□ a□y acti□□ □f C□□tract□ a□d a□y rights □f C□□tract□r t□ receive a□y □□□ey u□der this C□□tract□ pr□vided□ h□wever□ sh□u□d Architect□E□gi□eer Architect□E□gi□eer sha□□□ withi□ a reas□□ab□e ti□e□ re□der a□d de□iver t□ b□th re□der a□y decisi□□s□ a□d give a□y directi□□□ which i□ the □pi□i□□ □f either party heret□□ is □□t i□ acc□□tance□ a writte□ decisi□□ □□ a□□ c□ai□s □f parties heret□ a□d a□□ questi□□s which □ay arise with re□ative t□ this C□□tract□ either party □ay fi□e with said Architect□E□gi□eer within 30□□ □f W□r□ □r i□terpretati□□ □f C□□tract□ Specificati□□s□ a□d P□a□s□ Sh□u□d Architect□E□gi□eer fai□ t□ decisi□□□ directi□□ s□ re□dered□ C□□tract i□te□t is f□r there t□ be a writte□ decisi□□ t□ be made□ a□y i□ such decisi□□ "directed" "required" "permitted" "approved" "accepted" "satisfactory" □r w□rds □f □i□e i□p□rt are used□ it is understood that the Architect□E□gi□eer as agent for the Owner has the authority to exercise□ □f W□r□ necessary therefr□□ writte□ decisi□□s□directi□□s □f Architect□E□gi□eer as aforesaid□ "approved" "acceptab□e" "satisfact□ry" □r w□rds □f □i□e i□p□rt are used□ it is pr□dent□y carried □ut a□d a□y c□ai□ arisi□g therefr□□ sha□□ be thereafter ad□usted as herei□after provided□□ require□e□t□ per□issi□□□ □rder□ desig□ati□□□ prescripti□□□ appr□ved by□ acceptab□e□ □r Specificati□□s □r Drawi□gs acc□□pa□yi□g this C□□tract□ ter□s □f satisfact□ry □f Architect□E□gi□eer is i□te□ded□ Architect□E□gi□eer□ □□ass a□d Specifications□ □□ass a□d Specifications□ vari□us qua□ities re□ative t□ fi□ish□ w□r□□a□ship□ □r □ther qua□ities □f si□i□ar □i□d which ca□□□t□ fr□□ their □ature□ be specifica□□y a□d c□ear□y described a□d specified□ but □ecessari□y described i□ ge□era□ ter□s□ fu□fi□□□e□t □f which □ust depe□d □□ i□dividua□ □udg□e□t□ i□ a□□ such cases□ a□y questi□□ □f fu□fi□□□e□t □f said Specificati□□s sha□□ be decided by Architect□E□gi□eer□ □□ass a□d Specifications□ w□ri□e□s□ supervisors□ r pr□□ect represe□tatives as Architect□E□gi□eer □ay dee□ pr□per t□ acc□rda□ce with i□terpretati□□s □f □ea□i□g □f w□rds□ ter□s□ □r c□auses defi□i□g character □f Wateria□ fur□ished a□d W□r□ d□□e u□der this C□□tract□ see said □ateria□ is fur□ished a□d d□□e i□

GC□12□ SUPERI□TE□DE□CE A□D PR□□ECT REPRESE□TATI□□

It is agreed by Contractor that Architect□E□gi□eer□ □□ass a□d Specifications□ shall be decided by Architect□E□gi□eer□ □□ass a□d Specifications□ w□ri□e□s□ supervisors□ r pr□□ect represe□tatives as Architect□E□gi□eer □ay dee□ pr□per t□ acc□rda□ce with i□terpretati□□s □f □ea□i□g □f w□rds□ ter□s□ □r c□auses defi□i□g character □f Wateria□ fur□ished a□d W□r□ d□□e u□der this C□□tract□ see said □ateria□ is fur□ished a□d d□□e i□

acc□rda□ce with Specificati□□s theref□r□ C□□tract□r sha□□ fur□ish a□□ reas□□ab□e aid a□d assista□ce required
by sub□rdi□ate e□gi□eers□ supervis□rs□ □r pr□□ect represe□tatives f□r pr□per i□specti□□ a□d exa□i□ati□□
□f W□r□□ C□□tract□r sha□□ regard a□d □bey directi□□s a□d i□structi□□s □f a□y sub□rdi□ate e□gi□eers□
supervis□rs□ □r pr□□ect represe□tatives s□ app□i□ted whe□ such directi□□s a□d i□structi□□s are c□□siste□t
with □b□igati□□s □f this C□□tract a□d acce□pta□le pra□tices a□d Specificati□□s□ pr□vided□ h□wever□ sh□□ld
C□□tract□r d□ubt the W□r□□ □f this □r any sub□rdi□ate e□gi□eer supervis□r a□d a pr□ecessary
inspe□ti□□ be
satisfactory to Architect□Engineer□ Supervising Engineer□ Inspector□ or Contracting Officer□ the
abse□t a□d a□□
directi□□s give□ sha□□ be as bi□di□g as if give□ t□ C□□tract□r□ Adequate supervisi□□ by c□□pete□t a□d
resp□□sib□e C□□tract□r represe□tatives is esse□tia□ t□ pr□per perf□r□a□ce □f W□r□ a□d
□ac□ □f such
supervisi□□ sha□ be □□□□

GC□19□ PRE□I□I□ARY APPR□VA□

Architect□E□gi□eer sha□□ □□t have p□wer t□ waive □b□igati□□s □f this fur□ishi□g by C□□tract□r f□r g□□d □ateria□□ a□d perf□r□i□g g□□d w□r□ as herei□ described□ a□d fu□□ acc□rda□ce with P□a□s a□d Specificati□□s□ □□ fai□ure □r □□issi□□ □f Architect□E□gi□eer t□ c□□de□□ a□y defective w□r□ □r □ateria□ sha□□ re□ieve C□□tract□r fr□□ □b□igati□□s t□ tear □ut□ re□□ve□ a□d pr□per□y rep□ace sa□e at a□y ti□e pri□r t□ fi□a□ accepta□ce up□□ disc□very □f said defective w□r□ □r □ateria□□ pr□vided□ h□wever□ Architect□E□gi□eer sha□□□ up□□ request □f C□□tract□r□ i□spect□ accept□ a□d□□r re□ect a□y □ateria□ fur□ished□ a□d i□ eve□t □ateria□ was □□ce accepted by Architect□E□gi□eer□ such accepta□ce sha□□ be bi□di□g □□ □w□er□ u□□ess c□ear□y sh□w□ such □ateria□ fur□ished d□es □□t □eet specificati□□s f□r this w□r□□ A□y questi□□ed w□r□ □ay be □rdered ta□e□ up □r re□□ved f□r Architect□E□gi□eer□

GC□20□ DEFECTS A□D RE□EDIES

It is further agreed that neither final certificate nor any part thereof nor any accy rdance with Specificatsite s f□r use in W□rk W□r□ se□ected f□r sa□e□ sha□□ be dee□ed by Architect□E□gi□eer as u□suitab□e a□r □□ exp□se □f re□□vi□g re□exa□i□ati□□□ a□d rep□ace□e□t sha□□ be b□r□e by C□□tract□r with□ut C□□tract□r sha□□□ after receipt □f writte□ □□tice there□f to□ i□curred sha□□ be a□□□wed as Extra W□r□ a□d paid f□r by □w□er□ pr□vided□ where Architect□E□gi□eer□ f□rthwith re□□ve such □ateria□ a□d rebui□d □r □therwise re□edy such w□r□ □□ appr□va□ is specifica□y required by Specificati□□s pri□r t□ perf□r□a□ce □f certai□ w□r□ the C□□tract□r further agrees □w□er □ay □a□e such cha□ges a□d a□terati□□s as □w□er □□ Architect□E□gi□eer□ □r a□y part acc□□pa□yi□g pr□pri□a□e□ with□ut requesti□g pri□r i□specti□□ □r appr□va□ herei□ C□□tract□r sha□□ be relieved □f □bligati□□s t□ fur□ish□ i□stall□ c□□struct□ a□d c□□plete the W□r□ as herei□ specified□ C□□tract□r sha□□□ if s□ □rdered i□ writi□g□ i□crease his f□rce □r equip□e□t□ □r b□th□ t□ such a□ exte□t as t□ give reas□□ab□e assura□ce □f c□□p□ia□ce with schedu□e □f pr□gress□

GC□21□ CHA□GES A□D A□TERATI□□S

The C□□tract□r further agrees □w□er □ay □a□e such cha□ges a□d a□terati□□s as □w□er □□ Architect□E□gi□eer□ □r a□y part acc□□pa□yi□g pr□pri□a□e□ with□ut requesti□g pri□r i□specti□□ □r appr□va□ herei□ C□□tract□r sha□□ be relieved □f □bligati□□s t□ fur□ish□ i□stall□ c□□struct□ a□d c□□plete the W□r□ as herei□ specified□ C□□tract□r sha□□□ if s□ □rdered i□ writi□g□ i□crease his f□rce □r equip□e□t□ □r b□th□ t□ such a□ exte□t as t□ give reas□□ab□e assura□ce □f c□□p□ia□ce with schedu□e □f pr□gress□ If such cha□ges □r a□terati□□s di□i□ish qua□tity □f W□r□ t□ d□□ they sha□□ □□t c□□stitute basis f□r a c□ai□ f□r da□ages□ □r a□ticipated pr□fits □□ W□r□ that □ay be dispe□sed with□ except as pr□vided f□r u□it price ite□s u□der "Esti□ated Qua□tities□" If a□□u□t □f W□r□ is i□creased □r decreased□ a□d W□r□ ca□ fair□y be c□assified u□der Specificati□□s□ price ad□ust□e□t f□r such i□crease □r decrease sha□□ be □ade acc□rdi□g t□ qua□tity actua□□y d□□e a□d at u□it price□ if a□y□ estab□ished f□r such w□r□ u□der this C□□tract□ except as pr□vided f□r u□it price ite□s u□der "Esti□ated Qua□tities□" □therwise□ price ad□ust□e□t f□r such cha□ges sha□□ be a□□ed by C□□tract□r□ □r by Architect□E□gi□eer □ acc□rdance with Specificati□□s□ If a□y such cha□ge w□r□ sha□□ be c□□sidered as a□ extra W□r□ a□d paid f□r as pr□vided u□der Extra W□rk□

GC□22□ RIGHT □F ARCHITECT□E□GI□EER T□ □□DIFY □ETH□DS A□D EQUIP□E□T

If at a□y ti□e Architect□E□gi□eer is satisfied that the □ethods a□d equip□e□t being used by C□□tract□r□ or a□y of his Subc□□tract□rs are □□t adequate to secure□ w□ere□y □f W□r□ in the required time□ or a□y part thereof□ will be executed with adequate quality □f W□r□ and at a sufficient rate □f pr□gress required u□der this C□□tract□ Architect□E□gi□eer □ay □rder □a□e such cha□ges □r a□terati□□s as use□ess a□y □ateria□ a□ready d□□e □r □ateria□ a□ready fur□ished□ writi□g□ t□ i□crease safety □r i□pr□ve character a□d efficie□cy□ a□d C□□tract□r shall□ sha□□ rec□□pe□se C□□tract□r f□r a□y □ateria□ □r □ab□r s□ used□ a□d a□y actua□ □rder□ □ccasi□□ed by such cha□ges□ □r a□terati□□s□ If such cha□ges □r a□terati□□s di□i□ish the a□ount of the C□□tract□ W□r□ as a whole□ Architect□E□gi□eer sha□□ make a fair and reas□□ab□e adjustment of the C□□tract price for the W□r□ affected□ In estimating the value of such cha□ges □r a□terati□□s□ Architect□E□gi□eer sha□□ be guided by the prices□ if a□y□ specified□ C□□tract□r sha□□□ if s□ □rdered i□ writi□g□ i□crease his f□rce □r equip□e□t□ □r b□th□ t□ such a□ exte□t as t□ give reas□□ab□e assura□ce □f c□□p□ia□ce with schedu□e □f pr□gress□ If such cha□ges □r a□terati□□s are ordered□ and C□□tract□r is prevented thereby from completing the W□r□ within the time fixed herein or to such earlier date as Architect□E□gi□eer □ay subsequently prescribe in writing□ due to the actual delay caused by such cha□ges □r a□terati□□s□ C□□tract□r sha□□□ if □□ claim is presented to Architect□E□gi□eer within ten (10) days after the date of receipt by C□□tract□r of the order authorizing the cha□ges □r a□terati□□s□ be entitled to such reasonable extension of time as Architect□E□gi□eer □ay determine□ Failure of C□□tract□r to □ake such claim shall constitute a waiver of any right to an extension of time for such cause□ Failure of C□□tract□r to □ake such claim shall constitute a waiver of any right to an extension of time for such cause□

GC□23□ □EEPI□G P□A□S A□D SPECIFICATI□□S ACCESSIB□E

Architect□E□gi□eer sha□□ fur□ish C□□tract□r with a□ adequate a□d reas□□ab□e c□pies □f a□□□ Specificati□□s with□ut additi□□a□ expe□se□ a□d C□□tract□r sha□□ □eep □□e c□py □f sa□e c□□sta□t□y accessib□e □□ W□r□□ with □atest revisi□□s □□ted there□□□

GC□24□ □W□ERSHIP □F DRAWI□GS

A□□ Drawi□gs□ Specificati□□s□ a□d c□pies there□f fur□ished by Architect□E□gi□eer shall □□t be reused □□ the W□r□ □□ □ther wi□h excepti□□ □f sig□ed c□□tract sets□ are retur□ed t□ hi□ at c□□p□eti□□ □f W□r□□ A□□ □□de□s are pr□perty □f □w□er□ □□ request□

GC□25□ ADEQUACY □F DESIG□

It is u□derst□□d □w□er e□p□□yed c□□pete□t e□gi□eers a□d desig□ers□ It is□ agreed □w□er shall be resp□□sib□e f□r adequacy □f desig□□ sufficie□cy □f C□□tract D□cu□e□ts□ safety □f theref□re□ structure□ a□d practicabi□ity □f □perati□□s □f c□□p□eted Pr□□ect□ pr□vided C□□tract□r c□□p□ied with require□e□ts □f said C□□tract D□cu□e□ts□ a□□ appr□ved □□dificati□□s there□f□ additi□□s□ a□d a□terati□□s theret□ appr□ved i□ writi□g by □w□er□ Burde□ □f pr□□f □f such c□□p□ia□ce sha□□ be up□□ C□□tract□r t□ sh□w c□□p□ia□ce with said require□e□ts □f C□□tract D□cu□e□ts□ a□d ac□□□ted□

GC□26□ RIGHT □F E□TRY

□w□ner reserves the right t□ enter pr□perty □□ c□nducti□□ □□ which W□rk is there□f t□ be c□□structed □r i□sta□□ed□ by such age□t(s) as e□ected□ t□ supervise a□d i□spect apprᵛved additi□□s a□d a□terati□□s theret□ c□□struct □r i□sta□□ such c□□□atera□ w□r□ as said □w□er □ay desire□

GC□27□ C□□□ATERA□ C□□TRACTS

□w□er agrees t□ pr□vide by separate c□□tract □r □therwise□ a□□ □ab□r a□d □ateria□ t□ c□□p□eti□□ □f W□r□ specifica□□y exc□uded fr□□ this C□□tract□ □□t de□ayi□g pr□gress □f W□r□□ □r da□age said C□□tract□r□ except where such de□ays are specifica□□y □e□ti□□ed e□sewhere i□ C□□tract D□cu□e□ts□

GC□28□ DISCREPA□CIES A□D □□ISSI□□S

It is further agreed the i□te□t □f this C□□tract is a□□ w□r□ □ust be d□□e a□d fur□ished i□ acc□rda□ce with ge□era□□y accepted practice□ a□d i□ the eve□t □f a□y discrepa□cies betwee□ separate C□□tract D□cu□e□ts□ pri□rity □f i□terpretati□□ defi□ed u□der "C□□tract D□cu□e□ts" sha□□ g□ver□□ I□ the eve□t □f a re□ai□i□g d□ubt as t□ □ea□i□g a□d i□te□t □f a□y p□rti□□ □f C□□tract□r's□ □r Drawi□gs□ Architect□E□gi□eer sha□□ defi□e which is i□te□ded t□ app□y t□ W□rk pe□sati□□ □f the C□□tract□r sha□□ ta□e □ut a□d pr□cure a p□□icy □f w□r□er c□□pe□sati□□ with safety □f e□p□□yees a□d □thers □□□□ear W□r□ a□d c□□p□y with a□□ app□icab□e pr□visi□□s □f Federa□□ State□ a□d □u□icipa□ safety □aws a□d bui□di□g a□d c□□structi□□ c□des□ A□□ □achi□ery□ equip□e□t□ a□d □ther physica□ ha□ards sha□□ be guarded i□ acc□rda□ce with the "□a□ua□ □f Accide□t Preve□ti□□ i□ C□□structi□□" □f the Ass□ciated Ge□era□ C□□tract□rs □f A□erica except where i□c□□patib□e with Federa□□ State□ □r □u□icipa□ □aws □r regu□ati□□s□ C□□tract□r□ sureties□ a□d i□sura□ce carriers sha□□ defe□d□ i□de□□ify□ a□d save har□□ess □w□er a□d a□□ □fficers□ age□ts□ e□p□□yees□ Architect□E□gi□eer□ age□ts□ a□d e□p□□yees fr□□ a□□ suits□ acti□□s□ □r c□ai□s □f a□y character□ □a□e□ a□d descripti□□ □r□ur□ □r 06/23 acc□u□t □f a□y i□□uries □r da□ages received □r sustai□ed by a□y pers□□s□ pr□perty□ □□ acc□u□t □f a□y □eg□ige□t act □r fau□t □f C□□tract□r □r a□y subc□□tract□r□ age□ts□ □r e□p□□yees□ i□ executi□□ a□d

GC□29□ PRECAUTI□□S AGAI□ST ACCIDE□T□ E□P□YEES A□D THE PUB□IC

C□□tract□r sha□□ ta□e precauti□□s f□r the safety □f e□p□□yees a□d □thers □□□□ear W□r□ a□d c□□p□y with a□□ app□icab□e pr□visi□□s □f Federa□□ State□ a□d □u□icipa□ safety □aws a□d bui□di□g a□d c□□structi□□ c□des□ A□□ □achi□ery□ equip□e□t□ a□d □ther physica□ ha□ards sha□□ be guarded i□ acc□rda□ce with the "□a□ua□ □f Accide□t Preve□ti□□ i□ C□□structi□□" □f the Ass□ciated Ge□era□ C□□tract□rs □f A□erica except where i□c□□patib□e with Federa□□ State□ □r □u□icipa□ □aws □r regu□ati□□s□ C□□tract□r□ sureties□ a□d i□sura□ce carriers sha□□ defe□d□ i□de□□ify□ a□d save har□□ess □w□er a□d a□□ □fficers□ age□ts□ e□p□□yees□ Architect□E□gi□eer□ age□ts□ a□d e□p□□yees fr□□ a□□ suits□ acti□□s□ □r c□ai□s □f a□y character□ □a□e□ a□d descripti□□ 06/23 acc□u□t □f a□y i□□uries □r da□ages received □r sustai□ed by a□y pers□□s□ pr□perty□ □□ acc□u□t □f a□y □eg□ige□t act □r fau□t □f C□□tract□r □r a□y subc□□tract□r□ age□ts□ □r e□p□□yees□ i□ executi□□ a□d

supervisi□□ □f said C□□tract a□d Pr□□ect □f this C□□tract □r □□ acc□u□t □f C□□tract□r □r a□y subc□□tract□r
fai□ure t□ pr□vide □ecessary barricades□ war□i□g □ights□ □r sig□s□ a□d wi□□ be required t□ pay a□y □udg□e□t
with c□sts □btai□ed agai□st □w□er □r a□y □fficers□ age□ts□ □r e□p□□yees□ a□d□□r Architect□E□gi□eer
Safety precauti□□s ta□e□ sha□□ be s□□e resp□□sibi□ity a□d discreti□□ □f age□ts□ a□d □r e□p□□yees as a□
Cr e□tract□r
i□depe□de□t c□□tract□r□ i□c□usi□□ □f this paragraph i□ C□□tract□ as we□□ as a□y □□tice give□ by □w□er□
Architect□E□gi□eer□ □r represe□tatives c□□cer□i□g □□issi□□s u□der this artic□e as W□r□ pr□gresses□ are
i□te□ded □□□□y as re□ders t□ C□□tract□r □f duty a□d □□t c□□strued as a□y assu□pti□□ □f duty t□ supervise
C□□tract□r sha□□ pr□cure a□d carry□ at s□□e c□st a□d expe□se□ thr□ugh□ut □ife safety precauti□□s by
□□□

5□ State□e□t that i□sura□ce □f type aff□rded by p□□icy□ app□ied t□ a□□ □perati□□s □f whatever character□ u□derta□e□ by i□sured duri□g perf□r□a□ce □f this C□□tract□

6□ pr□vided such □perati□□s are required i□ perf□r□a□ce □f C□□tract□ a□d Pr□visi□□ that p□□icy □ay be ca□ce□□ed □□□y by □ai□i□g writte□ □□tice t□ □a□ed i□sured at address sh□w□ i□ this p□□icy stati□g whe□ □□t □ess tha□ 10 days

GC□32□ TI□E F□R C□□P□ETI□□ A□D □IQUIDATED DA□AGES

It is hereby understood and mutually agreed by and between the Contractor and Owner that time is of the essence of this Contract with respect to the date of beginning and completion as specified in Contract of Work to be done hereunder. Contractor shall be entitled to receive written notice to proceed with the Work from Owner before beginning any Work under this Contract. Contractor agrees to commence Work under this Contract on a date to be specified in a written "Notice to Proceed" from Owner and to fully complete the Work within the time as specified in Contract of Work. It is expressly understood and agreed by and between Contractor and Owner that the time for the commencement, carrying on and completion of said Work is a reasonable time for the purpose, taking into consideration the average climatic conditions and usual industrial conditions prevailing in the locality. Contractor does hereby agree, as a part of consideration for awarding this Contract to pay to Owner the amount specified in Contract, not as a penalty but as liquidated damages for the breach thereof, for each calendar day that Contractor shall be in default after the time stipulated in Contract for completing the Work. Owner will suffer damage by reason of delay in completing the Work within the time specified in Contract, which damage is impracticable and extremely difficult to ascertain and determine. Therefore, Contractor agrees that should it be in default after the time stipulated in Contract for completing the Work, it will

GC□33□ PRICE F□R W□R□

I□ c□□siderati□□ □f fur□ishi□g a□□ □ecessary □ab□r□ equip□e□t□ a□d c□□p□eti□□ □f□ateria□ w□r□ by C□□tract□r□ a□d □□ de□ivery □f a□□ □ateria□ e□braced i□ this C□□tract i□ fu□□ c□□f□r□ity with Specificati□□s a□d stipu□ati□□s herei□ c□□tai□ed□ □w□er agrees t□ pay C□□tract□r prices set f□rth i□ Pr□p□sa□ heret□ attached□ □ade a part □f this C□□tract□ a□d C□□tract□r hereby agrees t□ receive such prices i□ fu□□ f□r fur□ishi□g a□□ □ateria□ a□d □ab□r required f□r af□resaid W□r□□ a□s□ f□r a□□ B□□DS

GC□34□ It is further agreed by parties to this C□□tract that C□□tract□r will furnish and execute bonds in the amount of 100 percent of total contract price for satisfactory performance of Work and payment of all obligations arising under this Contract. Specifications, Drawings and requirements of Architect-Engineer□ □ateria□s□ a□d equip□e□t i□ acc□rda□ce with this C□□tract □□ f□r□s pr□vided f□r this purp□se□ executed by a□ appr□ved surety c□□pa□y auth□ri□ed t□ d□ busi□ess i□ the State □f Texas□ a□d agreed this C□□tract sha□□ be i□ effect u□ti□ such b□□ds are fu□nished a□d appr□ved by □w□er□ Perf□r□a□ce a□d Pay□e□t B□□ds shall be acceptable to Owner if executed by a Surety meeting the requirements of Chapter 2253 of the Texas Government Code.

GC□35□ EXCUSES FR□□ □ATURA□ CAUSES

U□□ess □therwise specified□ a□□ □□ss □r da□age t□ C□□tract□r arisi□g □ut □f the W□r□ shall be d□ atupacty with Chapter 2253 of the Texas Government Code, as in pr□secuti□□ □f sa□e□ □r u□usua□ □bstructi□□s□difficu□ties e□c□u□tered i□ pr□secuti□□ □f W□r□□ sha□□ be sustai□ed a□d b□r□e by C□□tract□r at w□ expe□se□

GC□36□ PR□TECTI□□ □F AD□□I□I□G PR□PERTY

Said C□□tract□r sha□□ ta□e pr□per □ea□s t□ pr□tect pr□perty□pr□pa□ace i t aady way ie gc□u□tered□ which □ight be i□□ured□seri□us□y affected by a□y pr□cess □f c□□structi□□ u□derta□e□ u□der this C□□tract□ fr□□ a□y da□age□i□□ury by reas□□ □f said pr□cess □f c□□structi□□□ a□d sha□□ be □iab□e f□r a□y□a□□ c□ai□s f□r such da□age □□ acc□u□t □f fai□ure t□ fu□□y pr□tect a□□ ad□□i□i□g pr□perty□ C□□tract□r agrees t□ i□de□□ify□ save□ a□d h□□d har□□ess □w□er agai□st a□y c□ai□s f□r da□ages due t□ a□y i□ury t□ a□y ad□acd tR r ad□□iRRg pr□perty□ arisi□g□gr□wi□g□Dut □f perf□r□a□ce □f this C□□tract□ whether by □w□er□ C□□tract□r□ a□y su□□□tract□r□ a□y□ne di□ectly□ or indirectly□ except for damages due to the fault or negligence of Owner or Owner's agents or employees.

GC□37□ PR□TECTI□□ AGAI□ST SUBC□□TRACT□R AB□RERS□ □ATERIA□E□ FURNISHED

C□□tract□r agrees t□ i□de□□ify□ save□ a□d h□□d har□□ess □w□er agai□st a□y arisi□g□gr□wi□g□Dut □f perf□r□a□ce □f this C□□tract□ whether by C□□tract□r□ a□y su□□□tract□r□ a□y□ne di□ectly□ or indirectly□ except for damages due to the fault or negligence of Owner or Owner's agents or employees.

GC□38□ PR□TECTI□□ AGAI□ST R□YA□TIES □R PATE□TED I□VE□TI□□

C□□tract□r shall pay all royalties and fees and make all searches and investigations necessary to determine that the materials furnished and designs directed by □etters pate□t □r c□pyright by suitab□e □ega□ c□□tract with pate□tee□ wi□ were fu□□y discharged□ whereup□□ pay□e□ts t□ C□□tract□r sha□□ be □esu□tati□ sha□□ defe□d a□□ suits□c□ai□s f□r i□fri□ge□e□t □f a□y pate□t□c□pyrights a□d acc□rda□ce with the terms of this C□□tract□ but i□ □□ eve□t sha□□ pr□visi□□s □f this artic□e be c□□strued □ess fr□□ a□y □□ss □□ acc□u□t there□f□ except □w□er sha□□ defe□d a□□ such suits□c□ai□s upon written notice from Contractor and assume the cost and expense of settlement.

GC□39□ GENERA□ CONDITIONS OF CONTRACT

a□d be resp□□sib□e f□r a□□ such □□ss whe□ a particu□ar desig□□ device□ □ateria□□ □r pr□cess□pr□duct □f a
particu□ar □a□ufacturer is specified□required by □w□er pr□vided□ h□wever□ if ch□ice □f a□ter□ate desig□□
device□ □ateria□□ □r pr□cess is a□□□wed□ C□□tract□r sha□□ i□de□□ify a□d save □w□er har□□ess fr□□ a□y
GC-39 acc□u AWARD OF RDI ATERIA CES pr□cess specified□required by □w□er is a□
i□fri□ge□e□t C□□tract□r sha□□ a□ways □bserve a□d c□□p□y with a□□ Federa□□ State□ a□d
shrdi ab cesp a□ sdiregf ati□s□ wsh□ ss□ ch ess pr□ pr□y giv□ grsuch i fl r□ dei ify a□d save
har□□ess □w□er
agai□st a□y c□ai□s arisi□g fr□□ vi□□ati□□ □f a□y such □aws□ □rdi□a□ces□ a□d regu□ati□□s by C□□tract□r □r
e□p□□yees□ except where such vi□□ati□□s are ca□□ed f□r by pr□visi□□s □f C□□tract D□cu□e□ts□ If P□a□s
a□d Specificati□□s are at varia□ce therewith□ C□□tract□r sha□□ pr□□pt□y □□tify Architect□E□gi□eer i□
writi□g□ a□d a□y □ecessary cha□ges be ad□usted as pr□vided i□ C□□tract f□r cha□ges i□ W□r□□ If C□□tract□r
perf□r□s a□y w□r□ □□□wi□g it t□ be c□□trary t□ such □aws□ □rdi□a□ces□ ru□es□
GC-40 ASSIGNMENT AND SUBLETTING
regu□ati□□s a□d with□ut
such □□tice t□ Architect□E□gi□eer agrees Contractor shall give prompt written notice to Architect□Engineer in case
fu□fi□e□t a□t□ C□□tract□r a□d □□t assig□ by P□wer □f Att□r□ey□ □r □therwise□ □r sub□et said
C□□tract with□ut c□rp□rate □aw derivi□g p□wers i□s□far as sa□e regu□ates □b□ects f□r which□
writte□ c□□se□t □f □w□er□ a□d □□ part □r feature □f W□r□ wi□□ be sub□et t□ a□y□□e
i□wh□ch ab□e t□diti□□s u□der which □w□er □ay e□ter i□t□ c□□tract□ sha□□ be c□□tr□□□i□g□
Architect□Engineer □r □w□er□ C□□tract□r further agrees sub□etti□g □f a□y p□rti□□□feature □f
a□y part □f this C□□tract□ t□ sa□e effect as th□ugh e□b□died herei□□
GC-41 TIME AND RATE OF COMPLETION
□ateria□s required i□ perf□r□a□ce □f this C□□tract sha□□ □□t re□ieve C□□tract□r fr□□ fu□□
□b□igati□□s t□ It is the □ea□i□g a□d i□te□t □f this C□□tract□ u□□ess □therwise herei□
prw□ded as pr□ided by the C□□tract t□ pr□secute W□r□ at such ti□es a□d sessi□□s□ i□ such □rder □f
precede□ce a□d □a□□er □□st c□□ducive t□ ec□□□□y □f c□□structi□□ pr□vided□ h□wever□ □rder a□d ti□e
□f pr□secuti□□ sha□□ be such that W□r□ sha□□ be substa□tia□□y c□□p□eted as a wh□□e □r i□ part□ i□ acc□rda□ce
with this C□□tract□ P□a□s□ a□d Specificati□□s□ a□d withi□ ti□e □f c□□p□eti□□ desig□ated i□ pr□p□sa□□
pr□vided a□s□ C whe tract w sh is hav sub g it the t wi h ti es re as ab y requested by f rce□
Architect□E□gi Architect□E□gi□eer□
sch dir ct ti sha d rder ir wh ch C struct g pr rp des te u der this W□r tract wh dates f wh
b□ av ided r
GC-42 EXTENSIONS OF TIME
wi d e tart ver a partia ws w ra sd estie ated dat ser sha pbe har if ever a parts□
Sh□u□d C□□tract□r be de□ayed i□ c□□p□eti□□ □f W□r□ by a□y act□□eg□ect Architect□E□gi□eer w a□y e□p□□yee □f either□ □ther c□□tract□rs e□p□□yed by □w□er□ cha□ges □rdered i□
W□r□□ stri□es□ □□c□□uts□ fires□ a□d u□usua□ de□ays by c□□□□□ carriers□ u□av□idab□e cause(s) bey□□d
C□□tract□r's c□□tr□□□ □r a□y cause which Architect□E□gi□eer decides □ustifies de□ay□ a□ exte□si□□ □f ti□e
sha□□ be a□□□wed f□r c□□p□eti□g W□r□□ sufficie□t t□ c□□pe□sate f□r de□ay□ a□□u□t □f exte□si□□ deter□i□ed
by Architect□E□gi□eer□ pr□vided□ h□wever□ C□□tract□r sha□□ give Architect□E□gi□eer pr□□pt □□tice i□
writi□g □f cause □f such de□ay□

GC□43□ HI□DRA□CES A□D DE□AYS

□□ c□ai□s sha□□ be □ade by C□□tract□r f□r da□ages resu□ti□g fr□□ fr□□ a□y cause (except where W□r□ is st□pped by □rder □f □w□er f□r □w□ c□□ve□ie□ce) duri□g pr□gress □f a□y p□rti□□ □f W□r□ e□braced i□ this C□□tract□ I□ case said W□r□ sha□□ be st□pped by act □f □w□er such expe□se as i□ □udg□e□t □f Architect□E□gi□eer is caused by such st□ppage □f said W□r□ sha□□ be paid□

GC□44□ QUA□TITIES A□D □EASURE□E□TS

by □w□er t□ C□□tract□r□ extra□r cust□□ary □easure□e□ts □f a□y □i□d a□□□wed□ but actua□ □easured c□□puted □e□gth□ area□ s□□id c□□te□ts□ □u□ber□ a□d weight □□□y c□□sidered□ u□□ess □therwise specifica□□y pr□vided□

GC□45□ ESTI□ATED QUA□TITIES

This C□□tract□ i□c□udi□g Specificati□□s□ P□a□s□ a□d esti□ate□ is i□te□ded t□ a□□ W□r□ t□ be car□y sh□w□ be ateria□ fur□ished hereu□der□ Where esti□ated qua□tities are sh□w□ f□r vari□us c□asses □f w□r□ t□ be d□□e a□d □ateria□ fur□ished u□der this C□□tract□ they are appr□xi□ate□ used □□□y as a basis f□r esti□ati□g pr□bab□e c□st □f W□r□□ a□d c□□pari□g pr□p□sa□s □ffered f□r W□r□□ It is u□derst□□d a□d agreed the actua□ a□□u□t □f W□r□ t□ be d□□e a□d □ateria□ fur□ished u□der this C□□tract Where pay□e□t is based □□ u□it price □eth□d□ C□□tract□r agrees t□ □a□e □□ □ay differ s□□ewhat fr□□ these esti□ates□ a□d where basis f□r pay□e□t u□der this C□□tract is u□it price□ a□ticipated pr□fits□ □r □therwise □□ acc□u□t □f a□y differe□ces f□u□d betwee□ qua□tities pay□e□t sha□□ be f□r actua□ a□□u□t □f such w□r□ d□□e a□d □ateria□ fur□ished□ W□r□ actua□□y d□□e□ □ateria□ actua□□y fur□ished u□der this C□□tract□ a□d esti□ated qua□tities c□□te□p□ated a□d c□□tai□ed i□ pr□p□sa□□ pr□vided□ h□wever□ where actua□ qua□tity □f a□y □a□□r ite□ i□ this C□□tract is a□ esti□ated qua□tity a□d actua□ qua□tity □f such "□a□□r ite□" varies □□re tha□ 25 perce□t "□a□□r Ite□" sha□□ be a□y i□dividua□ bid ite□ i□c□uded i□ pr□p□sa□ with a t□ta□ ab□ve □r be□□w stipulated qua□tity stated i□ this C□□tract□ a□ equitab□e ad□ust□e□t i□ C□□tract price□ shall be made to reflect □ncreases or decreases in quantities□ □f either party□ Equitab□e ad□ust□e□t sha□□ be based up□□ a□y i□crease or decrease in C□□tract c□sts due s□□e□y t□ such variati□□ ab□ve 125 perce□t □r be□□w 75 perce□t □f esti□ated qua□tity□ by ter□s □f this C□□tract□ as pr□vided u□der "Extra W□r□□"

GC□46□ PARTIA□ PAY□E□TS

□□□bef□re the □ast day □f each □□□th□ C□□tract□r sha□□ prepare f□r review□ a state□e□t wi□ Architect□E□gi□eer c□□p□ete□y as practicab□e□ t□ta□ va□ue □f W□r□ d□□e by C□□tract□r f□r pri□r □□□th□peri□d□ State□e□t sha□□ a□s□ i□c□ude va□ue □f a□□ s□u□d □ateria□s de□ivered □□ site □f W□r□ t□ be fabricated i□t□ W□r□□ Architect□E□gi□eer□ after appr□va□□ sha□□ sub□it C□□tract□r's partia□ pay □w□er sha□□ the□ pay C□□tract□r t□ta□ a□□u□t □f Architect□E□gi□eer's app□icati□□ t□ state□e□t □ess 5 perce□t □f a□□u□t there□f□ which 5 perce□t sha□□ be retai□ed u□ti□ fi□a□ pay□e□t□ a□d further □ess a□□ previ□us pay□e□ts a□d a□□ further su□s □ay be retai□ed by □w□er u□der ter□s □f this C□□tract□ It is u□derst□□d□ h□wever□ i□ case wh□□e W□r□ be □ear t□ c□□p□eti□□ a□d s□□e u□expected a□d u□usua□ de□ay □ccurs due t□ □□ fau□t □r □eg□ect □□ part □f C□□tract□r□ □w□er □ay□ up□□ Architect□E□gi□eer writte□ notice□ pay a reasonable amount of the retai□ed perce□tage□ C□□tract□r□ at □w□er's □pti□□□ □ay be re□ieved □f □b□igati□□ t□ fu□□y c□□p□ete W□r□□ a□d thereup□□□

PACKET 9:73 July 11, 2023

C□□tract□r sha□□ receive pay□e□t □f ba□a□ce due u□der C□□tract sub□ect □□□y t□ c□□diti□□s stated u□der
"Fi□a□ Pay□e□t□"

GC□47□ USE □F C□□P□ETED P□RTI□□S

□w□er sha□□ have the right t□ ta□e p□ssessi□□ □f a□d use a□y c□□p□eted p□rti□□s of W□r□ i□ partia□□y withsta□di□g ti□e f□r c□□p□eti□g e□tire w□r□ □r such p□rti□□s □ay □□t have expired but such ta□i□g p□ssessi□□ a□d use sha□□ □□t be dee□ed a□ accepta□ce □f a□y w□r□ □□t c□□p□eted i□ acc□rda□ce with C□□tract D□cu□e□ts□ If such pri□r use i□creases c□st □f □r de□ays W□r□

GC□48□ FI□A□ C□□P□ETI□□ A□D ACCEPTA□CE

C□□tract□r sha□□ be e□titled t□ such extra □□pe□sati□□□ □r exte□si□□ □f ti□e □r b□th□ as Withi□ 20 days after C□□tract□r gives Architect□E□gi□eer writte□ □□tice that Architect□E□gi□eer determi□es a□ W□r□ is c□□p□eted i□ acc□rda□ce with C□□tract D□cu□e□ts□ Architect□E□gi□eer sha□□ i□spect W□r□ a□d withi□ said ti□e□ if W□r□ is c□□p□eted i□ acc□rda□ce with C□□tract D□cu□e□ts□ Architect□E□gi□eer sha□□ issue t□ □w□er a□d C□□tract□r a Certificate □f C□□p□eti□□□ a□d thereup□□ it sha□□ be duty □f □w□er□ withi□ 10 days□ t□ issue a Certificate □f Accepta□ce □r W□ issua□ce f Certificate

GC□49□ FI□A□ PAY□E□T

Upo□ issua□ce f Certificate □f C□□p□eti□□□ Architect□E□gi□eer sha□□ proceed t□ prepare fi□a□ state□e□t □f va□ue □f a□□ W□r□ perf□r□ed a□d □ateria□s fur□ished u□der ter□s □f C□□tract a□d certify sa□e t□ □w□er□ wh□ sha□□ pay C□□tract□r □□□bef□re the 20th day after date □f Certificate □f C□□p□eti□□□ □r if g□ver□□e□ta□ fi□a□cia□ assista□ce is i□v□□ved□ withi□ 30 w□r□i□g days □f receipt □f fi□a□ pay□e□t fr□□ app□icab□e g□ver□□e□ta□ auth□rity□ ba□a□ce due C□□tract□r u□der ter□s □f this C□□tract□ pr□vided fu□□ perf□r□a□ce □f c□□tractua□ □b□igati□□s u□der ter□s □f this C□□tract□

GC□50□ PAY□E□T WITHHE□D

a□d said pay□e□t sha□ □e□ due i□ acca□da□ce f subsequent certificate t isfy

Defective W□r□ a□y pr□visi□□ i□ C□□tract D□cu□e□ts□ sha□□ re□ieve C□□tract□r □b□igati□□ f□r fu□fi□□ent f a□y warra□ty required i□ Specia□ Pr□visi□□s □f Specificati□□s□

C□□tract□r fai□ure t□ □a□e pay□e□ts pr□per□y t□ subc□□tract□rs□ f□r □ateria□ □a□ other c□ab tract□r d□□r

Whe□ gr□u□ds re□□ved □r C□□tract□r pr□vides a Surety B□□d satisfact□ry t□ □w□er t□ pr□tect □w□er i□ a□□u□t withhe□d□ pay□e□t sha□□ be □ade f□r a□□u□ts withhe□d because □f

GC□51□ DE□AYED PAY□E□TS

Sh□u□d □w□er fai□ t□ pay C□□tract□r □f su□ □a□ed i□ a□y partia□□fi□a□ pay□e□t is due state Architect□E□gi□eer fai□s t□ issue a□y state□e□t □□□bef□re date pr□vided□ □w□er sha□□ pay C□□tract□r□ i□ additi□□ t□ su□ sh□w□ as due by such state□e□t□ i□terest there□□ at the rate □f 6 perce□t per a□□u□□ u□□ess □therwise specified□ fr□□ date due as pr□vided u□der "Partia□ Pay□e□ts" a□d "Fi□a□ Pay□e□ts□" u□ti□ fu□□y paid□ fu□□y □iquidati□g a□y i□□ury t□ C□□tract□r gr□wi□g □ut □f such de□ay i□ pay□e□t□ but right is express□y reserved t□ C□□tract□r i□ the eve□t pay□e□ts □□t pr□□pt□y □ade as pr□vided u□der "Partia□ Pay□e□ts□" t□ at a□y ti□e thereafter treat C□□tract as aba□d□□ed by □□ver c□□pe□sati□□□ as pr□vided u□der "Aba□d□□□e□t □f C□□tract□" u□□ess such pay□e□ts are withhe□d i□ acc□rda□ce with pr□visi□□s □f "Pay□e□ts Withhe□d□"

GC□52□ EXTRA W□R□

"Extra W□r□□" as used i□ this C□□tract□ sha□□ □ea□□i□c□ude a□□ W□r□ Architect□E□gi□eer□□ required by w□er d□□e by C□□tract□r t□ acc□□p□ish a□y cha□ge□ a□terati□□□ □r additi□□ t□ W□r□ sh□w□ up□□ P□a□s□ □r reas□□ab□y i□p□ied by Specificati□□s□ a□d □□t c□vered by C□□tract□r's Pr□p□sa□□ except as provided under "Cha□ges a□d A□terati□□s Extras" wherei u□der Architect□E□gi□eer directi□□ whe□ prese□ted with a writte□ Extra W□r□ □rder sig□ed by Architect□E□gi□eer□ sub□ect□ h□wever□ t□ right □f C□□tract□r t□ require a writte□ c□□fir□ati□□ □f such Extra W□r□ □rder by □w□er□ It is a□s□ □eth□d A □ By agreed u□it prices□ □r agreed c□□pe□sati□ dtB be paid□ By agreed tract□ su□ r perf□r□i□g said Extra W□r□ sha□□ be deter□i□ed by □□e □eth□d C □ If □either □eth□ds A □□r B are agreed up□□ bef□re Extra W□r□ □r □□re □f thei□ f□□□□wi□g □eth□ds□

c□□□e□ced□ C□□tract□r sha□□ be paid "actua□ fie□d c□st" □f W□r□□ p□us

15 perce□t

I□ the eve□t said Extra W□r□ be perf□r□ed a□d paid f□r u□der □eth□d C□ pr□visi□□s □f this Artic□e sha□□ app□y a□d "actua□ fie□d c□st" defi□ed t□ i□c□ude c□st □f a□□ w□r□□e□ such as f□re□e□□ ti□e□eepers□ □echa□ics□ a□d □ab□rers□ a□d □ateria□s□ supp□ies□ tea□s□ truc□s□ re□ta□s □□ □achi□ery a□d equip□e□t□ f□r ti□e actua□□y e□p□□yed□used □□ such Extra W□r□□ p□us actua□ tra□sp□rtati□□ charges □ecessari□y i□curred□ t□gether with a□□ expe□ses i□curred direct□y □□ acc□u□t □f such Extra W□r□□ i□c□udi□g S□cia□ Security□ □□d Age Be□efits□ □ai□te□a□ce B□□ds□ Pub□ic □iabi□ity a□d Pr□perty Da□age□ W□r□□e□'s C□□pe□sati□□□ a□d a□□ □ther i□sura□ce as required by a□y □aw□□rdi□a□ce□ □r directed by Architect□E□gi□eer □r □w□er□ □r by the□ agreed t□□ Architect□E□gi□eer □ay direct f□r□ i□ which acc□u□ts □f "actua□ fie□d c□st" sha□□ be □ept a□d rec□rds □f these acc□u□ts □ade avai□ab□e t□ Architect□E□gi□eer□ Architect□E□gi□eer □ay a□s□ specify i□ writi□g□ bef□re W□r□ c□□□e□ces□ □eth□d □f d□i□g W□r□ as we□□ as type a□d □i□d □f □achi□ery a□d equip□e□t t□ be used□ □therwise□ these □atters □□ c□ai□ f□r Extra W□r□ □f a□y □i□d a□□□wed u□□ess Architect□E□gi□eer deter□i□ed by C□rdtsact□r□ U□□ess □therwise agreed up□□□ prices f□r use □f □achi□ery a□d equip□e□t□ I□ case a□y □ra□□writte□ □rders□i□structi□□s appear t□ C□□tract□r t□ i□v□□ve Extra W□r□ be deter□i□ed by usi□g 100 perce□t□ u□□ess □therwise specified□ □f the □atest schedu□e □f Equip□e□sati□□ □r ad□ust□e□t i□ c□□structi□□ ti□e sh□u□d be received□ C□□tract□r sha□□ □w□ershipExpe□se ad□pted by the Ass□ciated Ge□era□ C□□tract□rs □f A□erica□ Where requirab□e Architect□E□gi□eer f□r writte□ □rder auth□ri□i□g such Extra W□r□□ Sh□u□d a difference arise as t□ what d□es□d□es □□t c□□stitute Extra W□r□□ □r as t□ pay□e□t therefore t□ f□'actua□ fie□d c□st" paid C□□tract□r□ sha□□ c□ver a□d c□□pe□sate pr□fit□ Architect□E□gi□eer i□ sists up□□ perf□r□a□ce□ C□□tract□r sha□□ pr□ceed with W□r□ after such dispute and pending the agreement or determination by arbitration or otherwise as hereinafter provided□ It is further agreed by both parties hereto that time is of the essence of this Contract and□ if the Contractor neglects to prosecute the work properly or fails to perform any provision of this Contract□ the Owner□ after three (3) days written notice to the Contractor□ may make good such deficiencies and may deduct the cost thereof from the payment then or thereafter due the Contractor□ provided that the Architect□Engineer approves such action and has issued a Certificate for Payment therefor□ or the Owner may, without prejudice to any other remedy he may have, terminate the employment of the Contractor and take possession of the site and of all materials, tools and appliances thereon and finish the Work by whatever method he may deem expedient□ In such case the Contractor shall not be entitled to receive further payment until the Work is finished□ If the unpaid balance of the Contract Sum exceeds the expense of finishing the Work, including compensation for additional managerial and administrative services, such excess shall be paid to the Contractor□ If such expense exceeds such unpaid balance, the Contractor shall pay the difference to the Owner□ The expense incurred by the Owner as herein provided, and the damage for delay in completion, shall be certified by the Architect□Engineer, who shall have authority to determine the amount and extent of such expense□ This obligation for payment shall continue after termination of the Contract or of the Contractor's right to proceed□

GC□52□ TERMINATION

Architect□Engineer□s right to terminate the Contractor's right to proceed under this Contract, as provided in this Article, is in addition to and not in limitation of any other rights or remedies available to the Owner□ Architect□Engineer□s termination of the Contractor's right to proceed under this Article shall not relieve the Contractor or his Surety of any of their obligations under this Contract as to any portion of the Work performed□

excepti□□□ Architect□E□gi□eer sha□□ rep□y t□ such writte□ excepti□□s by C□□tract□r a□d re□der a fi□a□
decisi□□ i□ writi□g□ I□ case C□□tract□r sh□u□d appea□ fr□□ Architect□E□gi□eer's decisi□□□ appea□ sha□□ be
fi□ed with Architect□E□gi□eer a□d □w□er i□ writi□g withi□ 10 days after date □f de□ivery t□ C□□tract□r □f
Architect□E□gi□eer's fi□a□ decisi□□□ It is further agreed fi□a□ accepta□ce □f W□r□ by GC-54 a□d
□w□er at
accepta□ce by C□□tract□r □f fi□a□ pay□e□t□ sha□□ be a bar t□ a□y c□ai□ by either party□ except as
GC-55 ABA□D□□□E□T BY C□□TRACT□R
□therwise i□ C□□tract D□cuc□ts sh□u□d aba□d□□ a□d fai□□refuse t□ resu□e w□r□ withi□ 10 writte□
□□tifi□ days after
c□□p□y with
Architect□E□gi□eer □rders□ whe□ such □rders are c□□siste□t with C□□tract D□cu□e□ts□ the□ if where a
perf□r□a□ce b□□d exists□ Surety □□ b□□d sha□□ be □□tified i□ writi□g a□d directed t□ c□□p□ete W□r□□ a□d
a c□py □f said W□rce be de□ivered t□ C□□tract□r□
□achi□ery□ equip□e□t□ t□□□s□ □ateria□s□ □r supp□ies □□ the □□b□ but sa□e□ t□gether with a□y □ateria□s a□d
equip□e□t u□der c□□tract f□r W□r□□ □ay be he□d f□r use □□ W□r□ by □w□er □r Surety □□ c□□structi□□
b□□d□ □r a□□ther c□□tract□r i□ c□□p□eti□□ □f W□r□□ a□d C□□tract□r sha□□ □□t receive a□y re□ta□□credit
□w□er □ay thereup□□ e□p□□y such f□rce □f □e□ a□d use such
theref□r (except whe□ pided i□ erce becti d pr with Extra W□rty shere credit a□ c□wed as pr□vided
f□r u□der c□□p□ equipe with t□□□s□ □ateria□s a□d supp□ies as □w□er dee□s □ecessary t□
"Extra W□rc") pit uti□ersh□pe□ete□ vided□ such equip□e□t□ within 10 days after service of such ate□ty□ce□ reduce□ cost t□
□ay pr□ete a□
W□r□ c□□p□ete ref□ected W□rk sch□e□e of the f□□□□wi□g e□ective □a□□ers□
a□d supp□ies t□ C□□tract□r□ a□d expe□se charged sha□□ be deducted a□d paid by
□w□er □ut □f such □□□eys due □r □ay thereafter a□y ti□e bec□□e due t□
C□□tract□r u□der a□d by virtue □f this C□□tract□ I□ case such expe□se is □ess tha□
su□ payab□e u□der this C□□tract□ if sa□e had bee□ c□□p□eted by C□□tract□r□ the□
b□ C□□tract□r sha□□ receive the differe□ce□ I□ case such expe□se is greater tha□ su□
payab□e u□der this C□□tract□ if sa□e c□□p□eted by said C□□tract□r□ the□
C□□tract□r a□d□□r Surety sha□□ pay a□□u□t □f such excess t□ □w□er□ □r □w□er u□der sea□ed bids□ after five days' □□tice□ pub□ished □□e □r □□re ti□es i□
a □ewspaper havi□g ge□era□ circu□ati□□ i□ c□u□ty □f □□cati□□ □f W□r□□ □ay □et
C□□tract f□r c□□p□eti□□ □f W□r□ u□der substa□tia□□y sa□e ter□s a□d
Whe□ W□r□ dis□a□s have bee□ substa□tia□□y c□□p□eted□ C□□tract□r a□d Surety sha□□ pr□vided i□ this C□□tract□ I□ case □f a□y i□crease i□ c□st t□ □w□er □□tified a□d Certificates □f C□ew□eti□□ a□d Accepta□ce□ as pr□vided herei□□ issued□
C□□p□ete ite□i□ed c□□tract as c□□pared t□ what w□u□d have bee□ c□st u□der this C□□tract□
state□e□t □f C□□tract such u□ts□ certified t□ by Architect□E□gi□eer as c□rrect□ sha□□ the□ be
prepared a□d i□crease sha□□ be charged t□ C□□tract□r a□d Surety sha□□ re□ai□ b□u□d
de□ivered t□ C□□tract therefd Surety□ whereup□□ C□□tract□r a□d□□r Surety□ □r □w□er as case
□ay be H□wever, shall □□ relieved □f □□ability for any such □ew c□□tract pr□vided 13
pay□a□□ce due as ref□ected by said state□e□t withi□ 15 days after date □f such Certificate □f
C□□p□eti□□□ c□□p□ete u□der this C□□tract□ C□□tract□r a□d□□r Surety sha□□ be credited
therewith□

I□ the eve□t state□e□t □f acc□u□ts sh□ws c□st t□ c□□p□ete W□r□ is □ess c□st t□ had W□r□ bee□ w□□ep□eted by C□□tract□r u□der ter□s □f this C□□tract□ □r whe□ C□□tract□r a□d□□r Surety
sha□□ pay ba□a□ce sh□w□ due by the□ t□ □w□er□ the□ a□□ □achi□ery□ equip□e□t□ t□□□s□ □ateria□s□ □r
supp□ies □eft □□ site □f W□r□ sha□□ be tur□ed □ver t□ C□□tract□r a□d□□r Surety□ Sh□u□d c□st t□ c□□p□ete
W□r□ exceed C□□tract price a□d C□□tract□r a□d□□r his Surety fai□ t□ pay a□□u□t due □w□er withi□ ti□e
desig□ated herei□□ a□d there re□ai□s a□y □achi□ery□ equip□e□t□ t□□□s□ □ateria□s□ □r supp□ies □□ site □f
W□r□□ □□tice there□f□ t□gether with a□ ite□i□ed □ist □f such equip□e□t a□d □ateria□s sha□□ be □ai□ed t□
C□□tract□r a□d Surety at respective addresses desig□ated i□ this C□□tract□ pr□vided□ h□wever□ actua□
writte□ □□tice give□ i□ a□y □a□□er wi□□ satisfy this c□□diti□□□ After □ai□i□g □r □ther givi□g □f such □□tice□
GC 56 ABANDONED BY WORKER
such pr□perty sha□ be he□d at risk □f C□□tract□r a□d Surety sub□ect □□□y t□ duty □f □w□er t□ exercise
said terms with□t pr□tection and responsibility. After 15 days by C□□tract□r said C□□tract□r may
sus□e□d such wh□□□y
abandoned W□rk equipment and therefrom materials and supplies and equipment derived from materials
sa□e site credit
□f C□□tract□r and Surety. Such sa□e may be made at pub□ic private sa□e with□t notice to W□rk□r or
Architect E□gi□eer sha□ release any machinery f equipment u tt earned by Contractor which
which□ sha□□□
W□rk□r□ be f□ g t W□rk□r□ actua□ her□ Cp□eted by said Surety tract pr (at prices stated in attached pr□posa□s
where□n the prices are used) □r va□ue C□ntract□r and Surety□ p□eted W□r□ at a fair a□d equitab□e price□ a□d
a□□u□t □f a□□ Extra W□r□ perf□r□ed at prices agreed up□□□ □r pr□vided f□r by ter□s □f this C□□tract□
a□d a reas□□ab□e su□ t□ c□ver c□st □f a□y pr□visi□□s □ade by C□□tract□r t□ carry wh□□e w□r□ t□
c□□p□eti□□ a□d which ca□□□t be uti□i□ed□ Architect□E□gi□eer sha□□ the□ □a□e a fi□a□ state□e□t □f ba□a□ce
due C□□tract□r by deducti□g fr□□ esti□ates a□□ previ□us pay□e□ts by □w□er a□d □ther su□s retai□ed by
□w□er u□der ter□s □f this C□□tract a□d certify sa□e t□ □w□er wh□ sha□□ pay t□ C□□tract□r □□ □r bef□re
30 days after date □f □□tificati□□ by C□□tract□r□ ba□a□ce sh□w□ by said fi□a□ state□e□t as due C□□tract□r□
u□der ter□s □f this Agree□e□t□

FEDERAL CONTRACT PROVISIONS

ACCESS TO RECORDS AND REPORTS

Contractor must maintain an acceptable cost accounting system. Contractor agrees to provide the Owner, the Federal Aviation Administration and the Comptroller General of the United States or any of their duly authorized representatives access to any books, documents, papers and records of Contractor which are directly pertinent to the specific contract for the purpose of making audit, examination, excerpts and transcriptions. Contractor agrees to maintain all books, records and reports required under this contract for a period of not less than three years after final payment is made and all pending matters are closed.

NOTICE OF REQUIREMENT FOR AFFIRMATIVE ACTION TO ENSURE EQUAL EMPLOYMENT OPPORTUNITY

1. The Offeror's or Bidder's attention is called to the "Equal Opportunity Clause" and the "Standard Federal Equal Employment Opportunity Construction Contract Specifications" set forth herein.

2. The goals and timetables for minority and female participation, expressed in percentage terms for Contractor's aggregate workforce in each trade on all construction work in the covered area, are as follows:

Timetables

Goals for minority participation for each trade: 19.1%

Goals for female participation in each trade: 6.9%

These goals are applicable to all of Contractor's construction work (whether or not it is Federal or federally assisted) performed in the covered area. If Contractor performs construction work in a geographical area located outside of the covered area, it shall apply the goals established for such geographical area where the work is actually performed. With regard to this second area, Contractor also is subject to the goals for both its federally involved and nonfederally involved construction.

Contractor's compliance with the Executive Order and the regulations in 41 CFR Part 60-4 shall be based on its implementation of the Equal Opportunity Clause, specific affirmative action obligations required by the specifications set forth in 41 CFR 60-4.3(a) and its efforts to meet the goals. The hours of minority and female employment and training must be substantially uniform throughout the length of the contract, and in each trade, and Contractor shall make a good faith effort to employ minorities and women evenly on each of its projects. The transfer of minority or female employees or trainees from Contractor to Contractor or from project to project for the sole purpose of meeting Contractor's goals shall be a violation of the contract, the Executive Order and the regulations in 41 CFR Part 60-4. Compliance with the goals will be measured against the total work hours performed.

3. Contractor shall provide written notification to the Director of the Office of Federal Contract Compliance Programs (OFCCP) within 10 working days of award of any construction subcontract in excess of $10,000 at any tier for construction work under the contract resulting from this solicitation. The notification shall list the name, address, and telephone number of the subcontractor; employer identification number of the subcontractor; estimated dollar amount of the subcontract; estimated starting and completion dates of the subcontract; and the geographical area in which the subcontract is to be performed.

4. As used in this notice and in the contract resulting from this solicitation, the "covered area" is Texas, Midland County, City of Midland.

BREACH OF CONTRACT TERMS

Any violation or breach of terms of this contract on the part of Contractor or its subcontractors may result in the suspension or termination of this contract or such other action that may be necessary to enforce the rights of the parties of this agreement.

Owner will provide Contractor written notice that describes the nature of the breach and corrective actions Contractor must undertake in order to avoid termination of the contract. Owner reserves the right to withhold payments to Contractor until such time Contractor corrects the breach or the Owner elects to terminate the contract. The Owner's notice will identify a specific date by which Contractor must correct the breach. Owner may proceed with termination of the contract if Contractor fails to correct the breach by the deadline indicated in the Owner's notice.

The duties and obligations imposed by the Contract Documents and the rights and remedies available thereunder are in addition to, and not a limitation of, any duties, obligations, rights and remedies otherwise imposed or available by law.

BUY AMERICAN PREFERENCE

SOURCE

Title 49 USC § 50101

Executive Order 14005, *Ensuring the Future is Made in All of America by All of America's Workers*

Bipartisan Infrastructure Law (Pub. L. No. 117-58), Build America, Buy America (BABA)

APPLICABILITY

The Buy American Preference incorporates statutory requirements and policies outlined in the in 49 USC § 50101, Executive Order 14005, and BABA.

Section 50101 of 49 USC requires that all steel and manufactured goods used on AIP projects be produced in the United States. This section also gives the FAA the ability to issue a waiver to a Sponsor to use non-domestic material on an AIP funded project subject to meeting certain conditions. A Sponsor may request that the FAA issue a waiver from the Buy American Preference requirements if the FAA finds that:

1) Applying the provision is not in the public interest.
2) The steel or manufactured goods are not available in sufficient quantity or quality in the United States.

3) The cost of components and subcomponents produced in the United States is more than 60 percent of the total components of a facility or equipment, and final assembly has taken place in the United States. Items that have an FAA standard specification item number (such as specific airport lighting equipment) are considered the equipment.
4) Applying this provision would increase the cost of the overall project by more than 25 percent.

Executive Order 14005 advances the Administration's priority to use terms and conditions of Federal financial assistance awards to maximize the use of goods, products, and materials produced in, and services offered in, the United States. The Order directs, to the extent appropriate and consistent with applicable law, agencies shall partner with the Hollings Manufacturing Extension Partnership (MEP) to conduct supplier scouting in order to identify American companies that are able to produce goods, products, and materials in the United States that meet Federal procurement needs, prior to consideration of using non-domestic products.

The Bipartisan Infrastructure Law, Build America, Buy America (BABA) Act strengthens Made in America Laws and bolsters America's industrial base, protects national security, and supports high-paying jobs. Under BABA, iron, steel and certain construction materials are required to be 100% produced in the United States.

Under the Bipartisan Infrastructure Law (Pub. L. No. 117-58) BABA three waivers are available for iron and steel, manufactured products, and construction materials when a Federal agency finds that –

1) Applying the domestic content procurement preference would be inconsistent with the public interest (a "public interest waiver");
2) Types of iron, steel, manufactured products, or construction materials are not produced in the United States in sufficient and reasonably available quantities or of a satisfactory quality (a "nonavailability waiver"); or
3) The inclusion of iron, steel, manufactured products, or construction materials produced in the United States will increase the cost of the overall project by more than 25 percent (an "unreasonable cost waiver").

BABA defines construction materials, items that are or consists primarily of non-ferrous metals, plastic and polymer-based products (including polyvinylchloride, composite building materials, and polymers used in fiber optic cables), glass (including optic glass), lumber or drywall.

Items that consist of two or more of the aforementioned materials that have been combined together through a manufacturing process, and items that include at least one of the listed materials combined with a material that is not listed through a manufacturing process, should be treated as manufactured products, rather than as construction materials. For example, a plastic framed sliding window should be treated as a manufactured product while plate glass should be treated as a construction material**.**

The Buy America Preference requirements flow down from the Sponsor to first tier contractors, who are responsible for ensuring that lower tier contractors and subcontractors are also in compliance.

Note: The Buy American Preference does not apply to temporary equipment a contractor uses as a tool of its trade and which does not remain as part of the project.

Required Documentation

The FAA Buy American Requests. All applications (requests) for an FAA Buy American Preference Waiver includes, at minimum, a completed Content Percentage Worksheet and Final Assembly Questionnaire. Additional information may be requested from the applicant by the FAA. Airport Sponsors, consultants, construction contractors, or equipment manufacturers are responsible for completing and submitting waiver applications. The FAA is unable to make a determination on waiver requests with incomplete information. Sponsors must confirm with the bidder or offeror to assess the adequacy of the waiver request and associated information prior to forwarding a waiver request to the FAA for action. All FAA waivers forms are available from the FAA Buy American Requirements webpage.

Proprietary Confidentiality. Exemption 4 of the Freedom of Information Act protects "trade secrets and commercial or financial information obtained from a person that is privileged or confidential. Proprietary manufacturing and design information submitted to the Federal Aviation Administration for the purposes of receiving a Buy American Waiver shall not be disclosed outside the FAA. The FAA will provide a written notification to the Airport Sponsor, manufacturer(s), contractor(s) or supplier(s) when a waiver determination is complete.

Timing of Waiver Requests. Sponsors desiring a Type 2 waiver should submit their waiver request, with justification, *before* issuing a solicitation for bids or a request for proposal for a project.

The Sponsor must submit a Type 2, Type 3, or Type 4 waiver request *prior* to executing the contract. The FAA will generally not consider waiver requests after execution of the contract except where extraordinary and extenuating circumstances exist.

The Buy American Notice of Determination (NOD) Process. The FAA Reauthorization Act of 2018 requires that all approved waivers must be posted to the FAA's website and remain posted for public comment for 10 days, before becoming effective. All FAA waivers must complete the NOD process. Sponsors are encouraged to wait until approved waivers become effective before executing AIP projects.

Buy American Conformance Lists. The FAA Office of Airports maintains listings of projects and products that have received a waiver from the Buy American Preference requirements for project specific and nationwide use. Each of these conformance lists is available online at www.faa.gov/airports/aip/buy_american/. Products listed on the FAA Nationwide Buy American Conformance list do not require additional submittal of domestic content information. Nationwide waivers expire five years from the date issued, unless revoked earlier by the FAA.

Facility Waiver Requests. For construction of a facility, the Sponsor may submit the waiver request after bid opening, but prior to contract execution. Examples of facility construction include terminal buildings, terminal renovation, and snow removal equipment buildings.

Contract Types –

Construction and Equipment – The Sponsor must meet the Buy American Preference requirements of 49 USC § 50101 and BABA for all AIP funded projects that require materials that are or consists primarily of iron, steel or manufactured goods and construction materials.

Professional Services – Professional service agreements (PSAs) do not normally result in a deliverable that meets the definition of a manufactured product. However, the emergence of various project delivery methods has created situations where task deliverables under a PSA may include a manufactured product. If a PSA includes providing a manufactured good as a deliverable under the contract, the Sponsor must include the Buy American Preference provision in the agreement.

Property – Most land transactions do not involve acquiring a manufactured product. However, under certain circumstances, a property acquisition project could result in the installation of a manufactured product. For example, the installation of property fencing, gates, doors and locks, etc. represent manufactured products acquired under an AIP funded land project that must comply with Buy American Preferences.

Use of Provisions – No mandatory language provided. The following language is acceptable to the FAA and meets the intent of this requirement. If the Sponsor uses different language, the Sponsor's revised language must fully comply with 49 USC § 50101 and BABA.

There are two types of FAA Buy American certifications. The Sponsor must incorporate the appropriate certifications of compliance with FAA Buy American Preference in the solicitation:

- **Construction Projects** involving the replacement, rehabilitation, reconstruction of airfield surfaces such as on runways, taxiways, taxilanes, aprons, roadways, parking lots, etc. – Insert the Certificate of compliance to FAA Buy American Preference based on Construction Projects.
- **Equipment and Buildings Projects** involving and including the acquisition of equipment such as snow removal equipment, navigational aids, wind cones, and the construction of buildings such as hangars, terminal development, lighting vaults, aircraft rescue & firefighting buildings, etc. - Insert the Certificate of Compliance with FAA Buy American Preference Based on Equipment/Building Projects.

MODEL SOLICITATION CLAUSES

Certification of Compliance with FAA Buy American Preference Statement

FAA BUY AMERICAN PREFERENCE

Contractor certifies that its bid/offer is in compliance with 49 USC § 50101, BABA and other related Made in America Laws,[1] U.S. statutes, guidance, and FAA policies, which provide that Federal funds may not be obligated unless all iron, steel and manufactured goods used in AIP funded projects are produced in the United States, unless the Federal Aviation Administration has issued a waiver for the product; the product is listed as an Excepted Article, Material Or Supply in Federal Acquisition Regulation subpart 25.108; or is included in the FAA Nationwide Buy American Waivers Issued list.

The bidder or offeror must complete and submit the certification of compliance with FAA's Buy American Preference, BABA and Made in America laws included herein with their bid or offer. The Airport Sponsor/Owner will reject as nonresponsive any bid or offer that does not include a completed certification of compliance with FAA's Buy American Preference and BABA.

The bidder or offeror certifies that all constructions materials, defined to mean an article, material, or supply other than an item of primarily iron or steel; a manufactured product; cement and cementitious materials; aggregates such as stone, sand, or gravel; or aggregate binding agents or additives that are or consist primarily of: non-ferrous metals; plastic and polymer-based products (including polyvinylchloride, composite building materials, and polymers used in fiber optic cables); glass (including optic glass); lumber; or drywall used in the project are manufactured in the U.S.

[1] Per Executive Order 14005 "Made in America Laws" means all statutes, regulations, rules, and Executive Orders relating to federal financial assistance awards or federal procurement, including those that refer to "Buy America" or "Buy American," that require, or provide a preference for, the purchase or acquisition of goods, products, or materials produced in the United States, including iron, steel, and manufactured products offered in the United States.

Certification of Compliance with FAA Buy American Preference – Construction Projects

As a matter of bid responsiveness, the bidder or offeror must complete, sign, date, and submit this certification statement with its proposal. The bidder or offeror must indicate how it intends to comply with 49 USC § 50101, BABA and other related Made in America Laws, U.S. statutes, guidance, and FAA policies, by selecting one of the following certification statements. These statements are mutually exclusive. Bidder must select one or the other (i.e., not both) by inserting a checkmark (✓) or the letter "X".

☐ Bidder or offeror hereby certifies that it will comply with 49 USC § 50101, BABA and other related U.S. statutes, guidance, and policies of the FAA by:

a) Only installing iron, steel and manufactured products produced in the United States;

b) Only installing construction materials defined as: an article, material, or supply – other than an item of primarily iron or steel; a manufactured product; cement and cementitious materials; aggregates such as stone, sand, or gravel; or aggregate binding agents or additives that are or consist primarily of non-ferrous metals; plastic and polymer-based products (including polyvinylchloride, composite building materials, and polymers used in fiber optic cables); glass (including optic glass); lumber or drywall that have been manufactured in the United States.

c) Installing manufactured products for which the Federal Aviation Administration (FAA) has issued a waiver as indicated by inclusion on the current FAA Nationwide Buy American Waivers Issued listing; or

d) Installing products listed as an Excepted Article, Material or Supply in Federal Acquisition Regulation Subpart 25.108.

By selecting this certification statement, the bidder or offeror agrees:

a) To provide to the Airport Sponsor or the FAA evidence that documents the source and origin of the iron, steel, and/or manufactured product.
b) To faithfully comply with providing U.S. domestic products.
c) To refrain from seeking a waiver request after establishment of the contract, unless extenuating circumstances emerge that the FAA determines justified.
d) Certify that all construction materials used in the project are manufactured in the U.S.

☐ The bidder or offeror hereby certifies it cannot comply with the 100 percent Buy American Preferences of 49 USC § 50101(a) but may qualify for a Type 3 or Type 4 waiver under 49 USC § 50101(b). By selecting this certification statement, the apparent bidder or offeror with the apparent low bid agrees:

a) To the submit to the Airport Sponsor or FAA within 15 calendar days of being selected as the responsive bidder, a formal waiver request and required documentation that supports the type of waiver being requested.
b) That failure to submit the required documentation within the specified timeframe is cause for a non-responsive determination that may result in rejection of the proposal.
c) To faithfully comply with providing U.S. domestic products at or above the approved U.S. domestic content percentage as approved by the FAA.

d) To furnish U.S. domestic product for any waiver request that the FAA rejects.
e) To refrain from seeking a waiver request after establishment of the contract, unless extenuating circumstances emerge that the FAA determines justified.

Required Documentation

Type 2 Waiver (Nonavailability) - The iron, steel, manufactured goods or construction materials or manufactured goods are not available in sufficient quantity or quality in the United States. The required documentation for the Nonavailability waiver is

a) Completed Content Percentage Worksheet and Final Assembly Questionnaire
b) Record of thorough market research, consideration where appropriate of qualifying alternate items, products, or materials including;
c) A description of the market research activities and methods used to identify domestically manufactured items capable of satisfying the requirement, including the timing of the research and conclusions reached on the availability of sources.

Type 3 Waiver – The cost of components and subcomponents produced in the United States is more than 60 percent of the cost of all components and subcomponents of the "facility/project." The required documentation for a Type 3 waiver is:

a) Completed Content Percentage Worksheet and Final Assembly Questionnaire including;
b) Listing of all manufactured products that are not comprised of 100 percent U.S. domestic content (excludes products listed on the FAA Nationwide Buy American Waivers Issued listing and products excluded by Federal Acquisition Regulation Subpart 25.108; products of unknown origin must be considered as non-domestic products in their entirety).
c) Cost of non-domestic components and subcomponents, excluding labor costs associated with final assembly and installation at project location.
d) Percentage of non-domestic component and subcomponent cost as compared to total "facility" component and subcomponent costs, excluding labor costs associated with final assembly and installation at project location.

Type 4 Waiver (Unreasonable Costs) - Applying this provision for iron, steel, manufactured goods or construction materials would increase the cost of the overall project by more than 25 percent. The required documentation for this waiver is:

a) A completed Content Percentage Worksheet and Final Assembly Questionnaire from
b) At minimum two comparable equal bids and/or offers;
c) Receipt or record that demonstrates that supplier scouting called for in Executive Order 14005, indicates that no domestic source exists for the project and/or component;
d) Completed waiver applications for each comparable bid and/or offer.

False Statements: Per 49 USC § 47126, this certification concerns a matter within the jurisdiction of the Federal Aviation Administration and the making of a false, fictitious, or fraudulent certification may render the maker subject to prosecution under Title 18, United States Code.

Date	Signature
Company Name	Title

GENERAL CIVIL RIGHTS PROVISIONS

In all its activities within the scope of its airport program, the Contractor agrees to comply with pertinent statutes, Executive Orders, and such rules as identified in Title VI List of Pertinent Nondiscrimination Acts and Authorities to ensure that no person shall, on the grounds of race, color, national origin (including limited English proficiency), creed, sex (including sexual orientation and gender identity), age, or disability be excluded from participating in any activity conducted with or benefiting from Federal assistance.

This provision is in addition to that required by Title VI of the Civil Rights Act of 1964.

Specific Clause used for General Contract Agreements

The above provision binds Contractor and subcontractors from the bid solicitation period through the completion of the contract.

Title VI Solicitation Notice:

The Midland International Air & Space Port, in accordance with the provisions of Title VI of the Civil Rights Act of 1964 (78 Stat. 252, 42 USC §§ 2000d to 2000d-4) and the Regulations, hereby notifies all bidders or offerors that it will affirmatively ensure that for any contract entered into pursuant to this advertisement, select businesses, or disadvantaged business enterprises will be afforded full and fair opportunity to submit bids in response to this invitation and no businesses will be discriminated against on the grounds of race, color, national origin (including limited English proficiency), creed, sex (including sexual orientation and gender identity), age, or disability in consideration for an award.

Title VI List of Pertinent Nondiscrimination Acts and Authorities

During the performance of this contract, Contractor, for itself, its assignees, and successors in interest (hereinafter referred to as the "Contractor") agrees to comply with the following non-discrimination statutes and authorities; including but not limited to:

- Title VI of the Civil Rights Act of 1964 (42 USC § 2000d *et seq*., 78 stat. 252) (prohibits discrimination on the basis of race, color, national origin);
- 49 CFR part 21 (Non-discrimination in Federally-Assisted programs of the Department of Transportation—Effectuation of Title VI of the Civil Rights Act of 1964);
- The Uniform Relocation Assistance and Real Property Acquisition Policies Act of 1970, (42 USC § 4601) (prohibits unfair treatment of persons displaced or whose property has been acquired because of Federal or Federal-aid programs and projects);
- Section 504 of the Rehabilitation Act of 1973 (29 USC § 794 *et seq*.), as amended (prohibits discrimination on the basis of disability); and 49 CFR part 27 (Nondiscrimination on the Basis of Disability in Programs or Activities Receiving Federal Financial Assistance);
- The Age Discrimination Act of 1975, as amended (42 USC § 6101 *et seq*.) (prohibits discrimination on the basis of age);
- Airport and Airway Improvement Act of 1982 (49 USC § 47123), as amended (prohibits discrimination based on race, creed, color, national origin, or sex);

- The Civil Rights Restoration Act of 1987 (PL 100-259) (broadened the scope, coverage and applicability of Title VI of the Civil Rights Act of 1964, the Age Discrimination Act of 1975 and Section 504 of the Rehabilitation Act of 1973, by expanding the definition of the terms "programs or activities" to include all of the programs or activities of the Federal-aid recipients, sub-recipients and contractors, whether such programs or activities are Federally funded or not);
- Titles II and III of the Americans with Disabilities Act of 1990 (42 USC § 12101, et seq) (prohibit discrimination on the basis of disability in the operation of public entities, public and private transportation systems, places of public accommodation, and certain testing entities) as implemented by U.S. Department of Transportation regulations at 49 CFR parts 37 and 38;
- The Federal Aviation Administration's Nondiscrimination statute (49 USC § 47123) (prohibits discrimination on the basis of race, color, national origin, and sex);
- Executive Order 12898, Federal Actions to Address Environmental Justice in Minority Populations and Low-Income Populations (ensures nondiscrimination against minority populations by discouraging programs, policies, and activities with disproportionately high and adverse human health or environmental effects on minority and low-income populations);
- Executive Order 13166, Improving Access to Services for Persons with Limited English Proficiency, and resulting agency guidance, national origin discrimination includes discrimination because of limited English proficiency (LEP). To ensure compliance with Title VI, you must take reasonable steps to ensure that LEP persons have meaningful access to your programs 70 Fed. Reg. 74087 (2005);
- Title IX of the Education Amendments of 1972, as amended, which prohibits you from discriminating because of sex in education programs or activities (20 USC § 1681, et seq).

Compliance with Nondiscrimination Requirements:

During the performance of this contract, Contractor, for itself, its assignees, and successors in interest (hereinafter referred to as the "Contractor"), agrees as follows:

1. **Compliance with Regulations:** Contractor (hereinafter includes consultants) will comply with the Title VI List of Pertinent Nondiscrimination Acts and Authorities, as they may be amended from time to time, which are herein incorporated by reference and made a part of this contract.
2. **Nondiscrimination:** Contractor, with regard to the work performed by it during the contract, will not discriminate on the grounds of race, color, national origin (including limited English proficiency), creed, sex (including sexual orientation and gender identity), age, or disability in the selection and retention of subcontractors, including procurements of materials and leases of equipment. Contractor will not participate directly or indirectly in the discrimination prohibited by the Nondiscrimination Acts and Authorities, including employment practices when the contract covers any activity, project, or program set forth in Appendix B of 49 CFR part 21.
3. **Solicitations for Subcontracts, including Procurements of Materials and Equipment:** In all solicitations, either by competitive bidding or negotiation made by Contractor for work to be performed under a subcontract, including procurements of materials, or leases of equipment, each potential subcontractor or supplier will be notified by Contractor of Contractor's obligations under this contract and the Nondiscrimination Acts and Authorities on the grounds of race, color, or national origin.

4. **Information and Reports:** Contractor will provide all information and reports required by the Acts, the Regulations, and directives issued pursuant thereto and will permit access to its books, records, accounts, other sources of information, and its facilities as may be determined by the Sponsor or the Federal Aviation Administration to be pertinent to ascertain compliance with such Nondiscrimination Acts and Authorities and instructions. Where any information required of a contractor is in the exclusive possession of another who fails or refuses to furnish the information, Contractor will so certify to the Sponsor or the Federal Aviation Administration, as appropriate, and will set forth what efforts it has made to obtain the information.
5. **Sanctions for Noncompliance:** In the event of a Contractor's noncompliance with the non-discrimination provisions of this contract, the Sponsor will impose such contract sanctions as it or the Federal Aviation Administration may determine to be appropriate, including, but not limited to:
    a. Withholding payments to Contractor under the contract until Contractor complies; and/or
    b. Cancelling, terminating, or suspending a contract, in whole or in part.
6. **Incorporation of Provisions:** Contractor will include the provisions of paragraphs one through six in every subcontract, including procurements of materials and leases of equipment, unless exempt by the Acts, the Regulations, and directives issued pursuant thereto. Contractor will take action with respect to any subcontract or procurement as the Sponsor or the Federal Aviation Administration may direct as a means of enforcing such provisions including sanctions for noncompliance. Provided, that if Contractor becomes involved in, or is threatened with litigation by a subcontractor, or supplier because of such direction, Contractor may request the Sponsor to enter into any litigation to protect the interests of the Sponsor. In addition, Contractor may request the United States to enter into the litigation to protect the interests of the United States.

CLEAN AIR AND WATER POLLUTION CONTROL

Contractor agrees to comply with all applicable standards, orders, and regulations issued pursuant to the Clean Air Act (42 USC §§ 7401-7671q) and the Federal Water Pollution Control Act as amended (33 USC §§ 1251-1387). Contractor agrees to report any violation to the Owner immediately upon discovery. The Owner assumes responsibility for notifying the Environmental Protection Agency (EPA) and the Federal Aviation Administration.

Contractor must include this requirement in all subcontracts that exceed $150,000.

CONTRACT WORKHOURS AND SAFETY STANDARDS ACT REQUIREMENTS

1. Overtime Requirements.

No contractor or subcontractor contracting for any part of the contract work which may require or involve the employment of laborers or mechanics shall require or permit any such laborer or mechanic, including watchmen and guards, in any workweek in which he or she is employed on such work to work in excess of forty hours in such workweek unless such laborer or mechanic receives compensation at a rate not less

than one and one-half times the basic rate of pay for all hours worked in excess of forty hours in such workweek.

2. Violation; Liability for Unpaid Wages; Liquidated Damages.

In the event of any violation of the clause set forth in paragraph (1) of this clause, Contractor and any subcontractor responsible therefor shall be liable for the unpaid wages. In addition, such contractor and subcontractor shall be liable to the United States (in the case of work done under contract for the District of Columbia or a territory, to such District or to such territory), for liquidated damages. Such liquidated damages shall be computed with respect to each individual laborer or mechanic, including watchmen and guards, employed in violation of the clause set forth in paragraph (1) of this clause, in the sum of $29 for each calendar day on which such individual was required or permitted to work in excess of the standard workweek of forty hours without payment of the overtime wages required by the clause set forth in paragraph (1) of this clause.

3. Withholding for Unpaid Wages and Liquidated Damages.

The Federal Aviation Administration (FAA) or the Owner shall upon its own action or upon written request of an authorized representative of the Department of Labor withhold or cause to be withheld, from any moneys payable on account of work performed by Contractor or subcontractor under any such contract or any other Federal contract with the same prime contractor, or any other federally-assisted contract subject to the Contract Work Hours and Safety Standards Act, which is held by the same prime contractor, such sums as may be determined to be necessary to satisfy any liabilities of such contractor or subcontractor for unpaid wages and liquidated damages as provided in the clause set forth in paragraph (2) of this clause.

4. Subcontractors.

Contractor or subcontractor shall insert in any subcontracts the clauses set forth in paragraphs (1) through (4) and also a clause requiring the subcontractor to include these clauses in any lower tier subcontracts. The prime contractor shall be responsible for compliance by any subcontractor or lower tier subcontractor with the clauses set forth in paragraphs (1) through (4) of this clause.

COPELAND "ANTI-KICKBACK" ACT

Contractor must comply with the requirements of the Copeland "Anti-Kickback" Act (18 USC 874 and 40 USC 3145), as supplemented by Department of Labor regulation 29 CFR part 3. Contractor and subcontractors are prohibited from inducing, by any means, any person employed on the project to give up any part of the compensation to which the employee is entitled. Contractor and each Subcontractor must submit to the Owner, a weekly statement on the wages paid to each employee performing on covered work during the prior week. Owner must report any violations of the Act to the Federal Aviation Administration.

DAVIS-BACON REQUIREMENTS

1. Minimum Wages.

(i) All laborers and mechanics employed or working upon the site of the work will be paid unconditionally and not less often than once a week, and without subsequent deduction or rebate on any account (except such payroll deductions as are permitted by the Secretary of Labor under the Copeland Act (29 CFR Part 3)), the full amount of wages and bona fide fringe benefits (or cash equivalent thereof) due at time of payment computed at rates not less than those contained in the wage determination of the Secretary of Labor which is attached hereto and made a part hereof, regardless of any contractual relationship which may be alleged to exist between Contractor and such laborers and mechanics.

Contributions made or costs reasonably anticipated for bona fide fringe benefits under section 1(b)(2) of the Davis-Bacon Act on behalf of laborers or mechanics are considered wages paid to such laborers or mechanics, subject to the provisions of paragraph (1)(iv) of this section; also, regular contributions made or costs incurred for more than a weekly period (but not less often than quarterly) under plans, funds, or programs which cover the particular weekly period, are deemed to be constructively made or incurred during such weekly period. Such laborers and mechanics shall be paid the appropriate wage rate and fringe benefits on the wage determination for the classification of work actually performed, without regard to skill, except as provided in 29 CFR § 5.5(a)(4). Laborers or mechanics performing work in more than one classification may be compensated at the rate specified for each classification for the time actually worked therein: *Provided,* that the employer's payroll records accurately set forth the time spent in each classification in which work is performed. The wage determination (including any additional classification and wage rates conformed under (1)(ii) of this section) and the Davis-Bacon poster (WH-1321) shall be posted at all times by Contractor and its subcontractors at the site of the work in a prominent and accessible place where it can easily be seen by the workers.

(ii)(A) The contracting officer shall require that any class of laborers or mechanics, including helpers, which is not listed in the wage determination and which is to be employed under the contract shall be classified in conformance with the wage determination. The contracting officer shall approve an additional classification and wage rate and fringe benefits therefore only when the following criteria have been met:

(1) The work to be performed by the classification requested is not performed by a classification in the wage determination;

(2) The classification is utilized in the area by the construction industry; and

(3) The proposed wage rate, including any bona fide fringe benefits, bears a reasonable relationship to the wage rates contained in the wage determination.

(B) If Contractor and the laborers and mechanics to be employed in the classification (if known), or their representatives, and the contracting officer agree on the classification and wage rate (including the amount designated for fringe benefits where appropriate), a report of the action taken shall be sent by the contracting officer to the Administrator of the Wage and Hour Division, U.S. Department of Labor, Washington, DC 20210. The Administrator, or an authorized representative, will approve, modify, or disapprove every additional classification action within 30 days of receipt and so advise the contracting officer or will notify the contracting officer within the 30-day period that additional time is necessary.

(C) In the event Contractor, the laborers, or mechanics to be employed in the classification, or their representatives, and the contracting officer do not agree on the proposed classification and wage rate (including the amount designated for fringe benefits, where appropriate), the contracting officer shall refer the questions, including the views of all interested parties and the recommendation of the contracting officer, to the Administrator for determination. The Administrator, or an authorized representative, will issue a determination within 30 days of receipt and so advise the contracting officer or will notify the contracting officer within the 30-day period that additional time is necessary.

(D) The wage rate (including fringe benefits where appropriate) determined pursuant to subparagraphs (1)(ii) (B) or (C) of this paragraph, shall be paid to all workers performing work in the classification under this contract from the first day on which work is performed in the classification.

(iii) Whenever the minimum wage rate prescribed in the contract for a class of laborers or mechanics includes a fringe benefit which is not expressed as an hourly rate, Contractor shall either pay the benefit as stated in the wage determination or shall pay another bona fide fringe benefit or an hourly cash equivalent thereof.

(iv) If Contractor does not make payments to a trustee or other third person, Contractor may consider as part of the wages of any laborer or mechanic the amount of any costs reasonably anticipated in providing bona fide fringe benefits under a plan or program, *Provided,* that the Secretary of Labor has found, upon the written request of Contractor, that the applicable standards of the Davis-Bacon Act have been met. The Secretary of Labor may require Contractor to set aside in a separate account assets for the meeting of obligations under the plan or program.

2. Withholding. The Federal Aviation Administration or the Sponsor shall upon its own action or upon written request of an authorized representative of the Department of Labor withhold or cause to be withheld from Contractor under this contract or any other Federal contract with the same prime contractor, or any other federally-assisted contract subject to Davis-Bacon prevailing wage requirements, which is held by the same prime contractor, so much of the accrued payments or advances as may be considered necessary to pay laborers and mechanics, including apprentices, trainees, and helpers, employed by Contractor or any subcontractor the full amount of wages required by the contract. In the event of failure to pay any laborer or mechanic, including any apprentice, trainee, or helper, employed or working on the site of the work, all or part of the wages required by the contract, the Federal Aviation Administration may, after written notice to Contractor, Sponsor, Applicant, or Owner, take such action as may be necessary to cause the suspension of any further payment, advance, or guarantee of funds until such violations have ceased.

3. Payrolls and Basic Records.

(i) Payrolls and basic records relating thereto shall be maintained by Contractor during the course of the work and preserved for a period of three years thereafter for all laborers and mechanics working at the site of the work. Such records shall contain the name, address, and social security number of each such worker; his or her correct classification; hourly rates of wages paid (including rates of contributions or costs anticipated for bona fide fringe benefits or cash equivalents thereof of the types described in 1(b)(2)(B) of the Davis-Bacon Act); daily and weekly number of hours worked; deductions made; and actual wages paid. Whenever the Secretary of Labor has found under 29 CFR 5.5(a)(1)(iv) that the wages of any laborer or mechanic include the amount of any costs reasonably anticipated in providing benefits

under a plan or program described in section 1(b)(2)(B) of the Davis-Bacon Act, Contractor shall maintain records that show that the commitment to provide such benefits is enforceable, that the plan or program is financially responsible, and that the plan or program has been communicated in writing to the laborers or mechanics affected, and records which show the costs anticipated or the actual costs incurred in providing such benefits. Contractors employing apprentices or trainees under approved programs shall maintain written evidence of the registration of apprenticeship programs and certification of trainee programs, the registration of the apprentices and trainees, and the ratios and wage rates prescribed in the applicable programs.

(ii)(A) Contractor shall submit weekly for each week in which any contract work is performed a copy of all payrolls to the Federal Aviation Administration if the agency is a party to the contract, but if the agency is not such a party, Contractor will submit the payrolls to the applicant, Sponsor, or Owner, as the case may be, for transmission to the Federal Aviation Administration. The payrolls submitted shall set out accurately and completely all of the information required to be maintained under 29 CFR § 5.5(a)(3)(i), except that full social security numbers and home addresses shall not be included on weekly transmittals. Instead the payrolls shall only need to include an individually identifying number for each employee (*e.g.,* the last four digits of the employee's social security number). The required weekly payroll information may be submitted in any form desired. Optional Form WH–347 is available for this purpose from the Wage and Hour Division Web site at *http://www.dol.gov/esa/whd/forms/wh347instr.htm* or its successor site. The prime contractor is responsible for the submission of copies of payrolls by all subcontractors. Contractors and subcontractors shall maintain the full social security number and current address of each covered worker and shall provide them upon request to the Federal Aviation Administration if the agency is a party to the contract, but if the agency is not such a party, Contractor will submit them to the applicant, Sponsor, or Owner, as the case may be, for transmission to the Federal Aviation Administration, Contractor, or the Wage and Hour Division of the Department of Labor for purposes of an investigation or audit of compliance with prevailing wage requirements. It is not a violation of this section for a prime contractor to require a subcontractor to provide addresses and social security numbers to the prime contractor for its own records, without weekly submission to the sponsoring government agency (or the applicant, Sponsor, or Owner).

(B) Each payroll submitted shall be accompanied by a "Statement of Compliance," signed by Contractor or subcontractor or his or her agent who pays or supervises the payment of the persons employed under the contract and shall certify the following:

(1) That the payroll for the payroll period contains the information required to be provided under 29 CFR § 5.5(a)(3)(ii), the appropriate information is being maintained under 29 CFR § 5.5 (a)(3)(i), and that such information is correct and complete;

(2) That each laborer and mechanic (including each helper, apprentice, and trainee) employed on the contract during the payroll period has been paid the full weekly wages earned, without rebate, either directly or indirectly, and that no deductions have been made either directly or indirectly from the full wages earned, other than permissible deductions as set forth in Regulations, 29 CFR Part 3;

(3) That each laborer or mechanic has been paid not less than the applicable wage rates and fringe benefits or cash equivalents for the classification of work performed, as specified in the applicable wage determination incorporated into the contract.

(C) The weekly submission of a properly executed certification set forth on the reverse side of Optional Form WH-347 shall satisfy the requirement for submission of the "Statement of Compliance" required by paragraph (3)(ii)(B) of this section.

(D) The falsification of any of the above certifications may subject Contractor or subcontractor to civil or criminal prosecution under Section 1001 of Title 18 and Section 231 of Title 31 of the United States Code.

(iii) Contractor or subcontractor shall make the records required under paragraph (3)(i) of this section available for inspection, copying, or transcription by authorized representatives of the Sponsor, the Federal Aviation Administration, or the Department of Labor and shall permit such representatives to interview employees during working hours on the job. If Contractor or subcontractor fails to submit the required records or to make them available, the Federal agency may, after written notice to Contractor, Sponsor, applicant, or Owner, take such action as may be necessary to cause the suspension of any further payment, advance, or guarantee of funds. Furthermore, failure to submit the required records upon request or to make such records available may be grounds for debarment action pursuant to 29 CFR § 5.12.

4. Apprentices and Trainees.

(i) Apprentices. Apprentices will be permitted to work at less than the predetermined rate for the work they performed when they are employed pursuant to and individually registered in a bona fide apprenticeship program registered with the U.S. Department of Labor, Employment and Training Administration, Office of Apprenticeship Training, Employer and Labor Services, or with a State Apprenticeship Agency recognized by the Office, or if a person is employed in his or her first 90 days of probationary employment as an apprentice in such an apprenticeship program, who is not individually registered in the program, but who has been certified by the Office of Apprenticeship Training, Employer and Labor Services or a State Apprenticeship Agency (where appropriate) to be eligible for probationary employment as an apprentice. The allowable ratio of apprentices to journeymen on the job site in any craft classification shall not be greater than the ratio permitted to Contractor as to the entire work force under the registered program. Any worker listed on a payroll at an apprentice wage rate, who is not registered or otherwise employed as stated above, shall be paid not less than the applicable wage rate on the wage determination for the classification of work actually performed. In addition, any apprentice performing work on the job site in excess of the ratio permitted under the registered program shall be paid not less than the applicable wage rate on the wage determination for the work actually performed. Where a contractor is performing construction on a project in a locality other than that in which its program is registered, the ratios and wage rates (expressed in percentages of the journeyman's hourly rate) specified in Contractor's or subcontractor's registered program shall be observed. Every apprentice must be paid at not less than the rate specified in the registered program for the apprentice's level of progress, expressed as a percentage of the journeymen hourly rate specified in the applicable wage determination. Apprentices shall be paid fringe benefits in accordance with the provisions of the apprenticeship program. If the apprenticeship program does not specify fringe benefits, apprentices must be paid the full amount of fringe benefits listed on the wage determination for the applicable classification. If the Administrator determines that a different practice prevails for the applicable apprentice classification, fringes shall be paid in accordance with that determination. In the event the Office of Apprenticeship Training, Employer and Labor Services, or a State Apprenticeship Agency recognized by the Office, withdraws approval of an apprenticeship program, Contractor will no longer be permitted to utilize apprentices at less than the applicable predetermined rate for the work performed until an acceptable program is approved.

(ii) Trainees. Except as provided in 29 CFR § 5.16, trainees will not be permitted to work at less than the predetermined rate for the work performed unless they are employed pursuant to and individually registered in a program which has received prior approval, evidenced by formal certification by the U.S. Department of Labor, Employment and Training Administration. The ratio of trainees to journeymen on the job site shall not be greater than permitted under the plan approved by the Employment and Training Administration. Every trainee must be paid at not less than the rate specified in the approved program for the trainee's level of progress, expressed as a percentage of the journeyman hourly rate specified in the applicable wage determination. Trainees shall be paid fringe benefits in accordance with the provisions of the trainee program. If the trainee program does not mention fringe benefits, trainees shall be paid the full amount of fringe benefits listed on the wage determination unless the Administrator of the Wage and Hour Division determines that there is an apprenticeship program associated with the corresponding journeyman wage rate on the wage determination that provides for less than full fringe benefits for apprentices. Any employee listed on the payroll at a trainee rate that is not registered and participating in a training plan approved by the Employment and Training Administration shall be paid not less than the applicable wage rate on the wage determination for the classification of work actually performed. In addition, any trainee performing work on the job site in excess of the ratio permitted under the registered program shall be paid not less than the applicable wage rate on the wage determination for the work actually performed. In the event the Employment and Training Administration withdraws approval of a training program, Contractor will no longer be permitted to utilize trainees at less than the applicable predetermined rate for the work performed until an acceptable program is approved.

(iii) Equal Employment Opportunity. The utilization of apprentices, trainees, and journeymen under this part shall be in conformity with the equal employment opportunity requirements of Executive Order 11246, as amended, and 29 CFR Part 30.

5. Compliance with Copeland Act Requirements.

Contractor shall comply with the requirements of 29 CFR Part 3, which are incorporated by reference in this contract.

6. Subcontracts.

Contractor or subcontractor shall insert in any subcontracts the clauses contained in 29 CFR §§ 5.5(a)(1) through (10) and such other clauses as the Federal Aviation Administration may by appropriate instructions require, and also a clause requiring the subcontractors to include these clauses in any lower tier subcontracts. The prime contractor shall be responsible for the compliance by any subcontractor or lower tier subcontractor with all the contract clauses in 29 CFR § 5.5.

7. Contract Termination: Debarment.

A breach of the contract clauses in paragraph 1 through 10 of this section may be grounds for termination of the contract, and for debarment as a contractor and a subcontractor as provided in 29 CFR § 5.12.

8. Compliance with Davis-Bacon and Related Act Requirements.

All rulings and interpretations of the Davis-Bacon and Related Acts contained in 29 CFR Parts 1, 3, and 5 are herein incorporated by reference in this contract.

9. Disputes Concerning Labor Standards.

Disputes arising out of the labor standards provisions of this contract shall not be subject to the general disputes clause of this contract. Such disputes shall be resolved in accordance with the procedures of the Department of Labor set forth in 29 CFR Parts 5, 6, and 7. Disputes within the meaning of this clause include disputes between Contractor (or any of its subcontractors) and the contracting agency, the U.S. Department of Labor, or the employees or their representatives.

10. Certification of Eligibility.

(i) By entering into this contract, Contractor certifies that neither it (nor he or she) nor any person or firm who has an interest in Contractor's firm is a person or firm ineligible to be awarded Government contracts by virtue of section 3(a) of the Davis-Bacon Act or 29 CFR § 5.12(a)(1).

(ii) No part of this contract shall be subcontracted to any person or firm ineligible for award of a Government contract by virtue of section 3(a) of the Davis-Bacon Act or 29 CFR § 5.12(a)(1).

(iii) The penalty for making false statements is prescribed in the U.S. Criminal Code, 18 USC § 1001.

CERTIFICATION OF OFFEROR/BIDDER REGARDING DEBARMENT

By submitting a bid/proposal under this solicitation, the bidder or offeror certifies that neither it nor its principals are presently debarred or suspended by any Federal department or agency from participation in this transaction.

CERTIFICATION OF LOWER TIER CONTRACTORS REGARDING DEBARMENT

The successful bidder, by administering each lower tier subcontract that exceeds $25,000 as a "covered transaction," must confirm each lower tier participant of a "covered transaction" under the project is not presently debarred or otherwise disqualified from participation in this federally-assisted project. The successful bidder will accomplish this by:

1. Checking the System for Award Management at website: http://www.sam.gov.
2. Collecting a certification statement similar to the Certification of Offeror /Bidder Regarding Debarment, above.
3. Inserting a clause or condition in the covered transaction with the lower tier contract.

If the Federal Aviation Administration later determines that a lower tier participant failed to disclose to a higher tier participant that it was excluded or disqualified at the time it entered the covered transaction, the FAA may pursue any available remedies, including suspension and debarment of the non-compliant participant.

DISADVANTAGED BUSINESS ENTERPRISE

Bid Information Submitted as a matter of responsiveness:

The Owner's award of this contract is conditioned upon Bidder or Offeror satisfying the good faith effort requirements of 49 CFR § 26.53.

As a condition of responsiveness, the Bidder or Offeror must submit the following information with its proposal on the forms provided herein:

1) The names and addresses of Disadvantaged Business Enterprise (DBE) firms that will participate in the contract;
2) A description of the work that each DBE firm will perform;
3) The dollar amount of the participation of each DBE firm listed under (1);
4) Written statement from Bidder or Offeror that attests their commitment to use the DBE firm(s) listed under (1) to meet the Owner's project goal
5) Written confirmation from each listed DBE firm that it is participating in the contract in the kind and amount of work provided in the prime contractor's commitment; and
6) If Bidder or Offeror cannot meet the advertised project DBE goal, evidence of good faith efforts undertaken by the Bidder or Offeror as described in appendix A to 49 CFR part 26. The documentation of good faith efforts must include copies of each DBE and non-DBE subcontractor quote submitted to the bidder when a non-DBE subcontractor was selected over a DBE for work on the contract.

Bid Information submitted as a matter of responsibility:

The Owner's award of this contract is conditioned upon Bidder or Offeror satisfying the good faith effort requirements of 49 CFR § 26.53.

As a condition of responsibility, every Bidder or Offeror must submit the following information on the forms provided herein within five days after Bid Opening.

1) The names and addresses of Disadvantaged Business Enterprise (DBE) firms that will participate in the contract;
2) A description of the work that each DBE firm will perform;
3) The dollar amount of the participation of each DBE firm listed under (1);
4) Written statement from Bidder or Offeror that attests their commitment to use the DBE firm(s) listed under (1) to meet the Owner's project goal;
5) Written confirmation from each listed DBE firm that it is participating in the contract in the kind and amount of work provided in the prime contractor's commitment; and
6) If Bidder or Offeror cannot meet the advertised project DBE goal, evidence of good faith efforts undertaken by the Bidder or Offeror as described in appendix A to 49 CFR part 26. The documentation of good faith efforts must include copies of each DBE and non-DBE subcontractor quote submitted to the bidder when a non-DBE subcontractor was selected over a DBE for work on the contract.

Contract Assurance (49 CFR § 26.13)

Contractor, subrecipient or subcontractor shall not discriminate on the basis of race, color, national origin, or sex in the performance of this contract. Contractor shall carry out applicable requirements of 49 CFR part 26 in the award and administration of DOT-assisted contracts. Failure by Contractor to carry out these requirements is a material breach of this contract, which may result in the termination of this contract or such other remedy as the recipient deems appropriate, which may include, but is not limited to:

1) Withholding monthly progress payments;
2) Assessing sanctions;
3) Liquidated damages; and/or
4) Disqualifying Contractor from future bidding as non-responsible.

Prompt Payment (49 CFR § 26.29) –
The prime contractor agrees to pay each subcontractor under this prime contract for satisfactory performance of its contract no later than 30 days from the receipt of each payment the prime contractor receives from City of Midland, Texas. The prime contractor agrees further to return retainage payments to each subcontractor within 30 days after the subcontractor's work is satisfactorily completed. Any delay or postponement of payment from the above-referenced time frame may occur only for good cause following written approval of the City of Midland, Texas. This clause applies to both DBE and non-DBE subcontractors.

Termination of DBE Subcontracts (49 CFR § 26.53(f)) –
The prime contractor must not terminate a DBE subcontractor listed in response to this Bid Proposal (or an approved substitute DBE firm) without prior written consent of City of Midland, Texas. This includes, but is not limited to, instances in which the prime contractor seeks to perform work originally designated for a DBE subcontractor with its own forces or those of an affiliate, a non-DBE firm, or with another DBE firm.

The prime contractor shall utilize the specific DBEs listed to perform the work and supply the materials for which each is listed unless Contractor obtains written consent City of Midland, Texas. Unless City of Midland, Texas consent is provided, the prime contractor shall not be entitled to any payment for work or material unless it is performed or supplied by the listed DBE.

City of Midland, Texas may provide such written consent only if City of Midland, Texas agrees, for reasons stated in the concurrence document, that the prime contractor has good cause to terminate the DBE firm. For purposes of this paragraph, good cause includes the circumstances listed in 49 CFR §26.53.

Before transmitting to City of Midland, Texas its request to terminate and/or substitute a DBE subcontractor, the prime contractor must give notice in writing to the DBE subcontractor, with a copy to City of Midland, Texas, of its intent to request to terminate and/or substitute, and the reason for the request.

The prime contractor must give the DBE five days to respond to the prime contractor's notice and advise City of Midland, Texas and Contractor of the reasons, if any, why it objects to the proposed termination of its subcontract and why City of Midland, Texas should not approve the prime contractor's action. If required in a particular case as a matter of public necessity (e.g., safety), City of Midland, Texas may provide a response period shorter than five days.

In addition to post-award terminations, the provisions of this section apply to preaward deletions of or substitutions for DBE firms put forward by offerors in negotiated procurements.

TEXTING WHEN DRIVING

In accordance with Executive Order 13513, "Federal Leadership on Reducing Text Messaging While Driving," (10/1/2009) and DOT Order 3902.10, "Text Messaging While Driving," (12/30/2009), the Federal Aviation Administration encourages recipients of Federal grant funds to adopt and enforce safety policies that decrease crashes by distracted drivers, including policies to ban text messaging while driving when performing work related to a grant or subgrant.

In support of this initiative, the Owner encourages Contractor to promote policies and initiatives for its employees and other work personnel that decrease crashes by distracted drivers, including policies that ban text messaging while driving motor vehicles while performing work activities associated with the project. Contractor must include the substance of this clause in all sub-tier contracts exceeding $10,000 that involve driving a motor vehicle in performance of work activities associated with the project.

PROHIBITION ON CERTAIN TELECOMMUNICATIONS AND VIDEO SURVEILLANCE SERVICES OR EQUIPMENT

Contractor and Subcontractor agree to comply with mandatory standards and policies relating to use and procurement of certain telecommunications and video surveillance services or equipment in compliance with the National Defense Authorization Act.

EQUAL OPPORTUNITY CLAUSE

During the performance of this contract, Contractor agrees as follows:

(1) Contractor will not discriminate against any employee or applicant for employment because of race, color, religion, sex, sexual orientation, gender identity, or national origin. Contractor will take affirmative action to ensure that applicants are employed, and that employees are treated during employment, without regard to their race, color, religion, sex, sexual orientation, gender identify, or national origin. Such action shall include, but not be limited to, the following: employment, upgrading, demotion, or transfer; recruitment or recruitment advertising; layoff, or termination; rates of pay or other forms of compensation; and selection for training, including apprenticeship. Contractor agrees to post in conspicuous places, available to employees and applicants for employment, notices to be provided setting forth the provisions of this nondiscrimination clause.

(2) Contractor will, in all solicitations or advertisements for employees placed by or on behalf of Contractor, state that all qualified applicants will receive consideration for employment without regard to race, color, religion, sex, sexual orientation, gender identity, or national origin.

(3) Contractor will not discharge or in any other manner discriminate against any employee or applicant for employment because such employee or applicant has inquired about, discussed, or disclosed the compensation of the employee or applicant or another employee or applicant. This provision shall not apply to instances in which an employee who has access to the compensation information of other employees or

applicants as a part of such employee's essential job functions discloses the compensation of such other employees or applicants to individuals who do not otherwise have access to such information, unless such disclosure is in response to a formal complaint or charge, in furtherance of an investigation, proceeding, hearing, or action, including an investigation conducted by the employer, or is consistent with Contractor's legal duty to furnish information.

(4) Contractor will send to each labor union or representative of workers with which it has a collective bargaining agreement or other contract or understanding, a notice to be provided by the agency contracting officer, advising the labor union or workers' representative of Contractor's commitments under this section 202 of Executive Order 11246 of September 24, 1965, and shall post copies of the notice in conspicuous places available to employees and applicants for employment.

(5) Contractor will comply with all provisions of Executive Order 11246 of September 24, 1965, and of the rules, regulations, and relevant orders of the Secretary of Labor.

(6) Contractor will furnish all information and reports required by Executive Order 11246 of September 24, 1965, and by the rules, regulations, and orders of the Secretary of Labor, or pursuant thereto, and will permit access to his books, records, and accounts by the contracting agency and the Secretary of Labor for purposes of investigation to ascertain compliance with such rules, regulations, and orders.

(7) In the event of Contractor's noncompliance with the nondiscrimination clauses of this contract or with any such rules, regulations, or orders, this contract may be canceled, terminated, or suspended in whole or in part and Contractor may be declared ineligible for further Government contracts in accordance with procedures authorized in Executive Order 11246 of September 24, 1965, and such other sanctions may be imposed and remedies invoked as provided in Executive Order 11246 of September 24, 1965, or by rule, regulation, or order of the Secretary of Labor, or as otherwise provided by law.

(8) Contractor will include the provisions of paragraphs (1) through (8) in every subcontract or purchase order unless exempted by rules, regulations, or orders of the Secretary of Labor issued pursuant to section 204 of Executive Order 11246 of September 24, 1965, so that such provisions will be binding upon each subcontractor or vendor. Contractor will take such action with respect to any subcontract or purchase order as may be directed by the Secretary of Labor as a means of enforcing such provisions, including sanctions for noncompliance*: Provided,* however, that in the event Contractor becomes involved in, or is threatened with, litigation with a subcontractor or vendor as a result of such direction, Contractor may request the United States to enter into such litigation to protect the interests of the United States.

STANDARD FEDERAL EQUAL EMPLOYMENT OPPORTUNITY
CONSTRUCTION CONTRACT SPECIFICATIONS

1. As used in these specifications:

   a. "Covered area" means the geographical area described in the solicitation from which this contract resulted;

   b. "Director" means Director, Office of Federal Contract Compliance Programs (OFCCP), U.S. Department of Labor, or any person to whom the Director delegates authority;

c. "Employer identification number" means the Federal social security number used on the Employer's Quarterly Federal Tax Return, U.S. Treasury Department Form 941;

d. "Minority" includes:

(1) Black (all persons having origins in any of the Black African racial groups not of Hispanic origin);

(2) Hispanic (all persons of Mexican, Puerto Rican, Cuban, Central or South American, or other Spanish culture or origin, regardless of race);

(3) Asian and Pacific Islander (all persons having origins in any of the original peoples of the Far East, Southeast Asia, the Indian Subcontinent, or the Pacific Islands); and

(4) American Indian or Alaskan native (all persons having origins in any of the original peoples of North America and maintaining identifiable tribal affiliations through membership and participation or community identification).

2. Whenever Contractor, or any subcontractor at any tier, subcontracts a portion of the work involving any construction trade, it shall physically include in each subcontract in excess of $10,000 the provisions of these specifications and the Notice which contains the applicable goals for minority and female participation and which is set forth in the solicitations from which this contract resulted.

3. If Contractor is participating (pursuant to 41 CFR part 60-4.5) in a Hometown Plan approved by the U.S. Department of Labor in the covered area either individually or through an association, its affirmative action obligations on all work in the Plan area (including goals and timetables) shall be in accordance with that Plan for those trades which have unions participating in the Plan. Contractors must be able to demonstrate their participation in and compliance with the provisions of any such Hometown Plan. Each contractor or subcontractor participating in an approved plan is individually required to comply with its obligations under the EEO clause and to make a good faith effort to achieve each goal under the Plan in each trade in which it has employees. The overall good faith performance by other contractors or subcontractors toward a goal in an approved Plan does not excuse any covered contractor's or subcontractor's failure to take good faith efforts to achieve the Plan goals and timetables.

4. Contractor shall implement the specific affirmative action standards provided in paragraphs 7a through 7p of these specifications. The goals set forth in the solicitation from which this contract resulted are expressed as percentages of the total hours of employment and training of minority and female utilization Contractor should reasonably be able to achieve in each construction trade in which it has employees in the covered area. Covered construction contractors performing construction work in a geographical areas where they do not have a Federal or federally assisted construction contract shall apply the minority and female goals established for the geographical area where the work is being performed. Goals are published periodically in the Federal Register in notice form, and such notices may be obtained from any Office of Federal Contract Compliance Programs office or from Federal procurement contracting officers. Contractor is expected to make substantially uniform progress in meeting its goals in each craft during the period specified.

5. Neither the provisions of any collective bargaining agreement, nor the failure by a union with whom Contractor has a collective bargaining agreement, to refer either minorities or women shall excuse

Contractor's obligations under these specifications, Executive Order 11246, or the regulations promulgated pursuant thereto.

6. In order for the nonworking training hours of apprentices and trainees to be counted in meeting the goals, such apprentices and trainees must be employed by Contractor during the training period, and Contractor must have made a commitment to employ the apprentices and trainees at the completion of their training, subject to the availability of employment opportunities. Trainees must be trained pursuant to training programs approved by the U.S. Department of Labor.

7. Contractor shall take specific affirmative actions to ensure equal employment opportunity. The evaluation of Contractor's compliance with these specifications shall be based upon its effort to achieve maximum results from its actions. Contractor shall document these efforts fully, and shall implement affirmative action steps at least as extensive as the following:

a. Ensure and maintain a working environment free of harassment, intimidation, and coercion at all sites, and in all facilities at which Contractor's employees are assigned to work. Contractor, where possible, will assign two or more women to each construction project. Contractor shall specifically ensure that all foremen, superintendents, and other onsite supervisory personnel are aware of and carry out Contractor's obligation to maintain such a working environment, with specific attention to minority or female individuals working at such sites or in such facilities.

b. Establish and maintain a current list of minority and female recruitment sources, provide written notification to minority and female recruitment sources and to community organizations when Contractor or its unions have employment opportunities available, and maintain a record of the organizations' responses.

c. Maintain a current file of the names, addresses, and telephone numbers of each minority and female off-the-street applicant and minority or female referral from a union, a recruitment source, or community organization and of what action was taken with respect to each such individual. If such individual was sent to the union hiring hall for referral and was not referred back to Contractor by the union or, if referred, not employed by Contractor, this shall be documented in the file with the reason therefor, along with whatever additional actions Contractor may have taken.

d. Provide immediate written notification to the Director when the union or unions with which Contractor has a collective bargaining agreement has not referred to Contractor a minority person or woman sent by Contractor, or when Contractor has other information that the union referral process has impeded Contractor's efforts to meet its obligations.

e. Develop on-the-job training opportunities and/or participate in training programs for the area which expressly include minorities and women, including upgrading programs and apprenticeship and trainee programs relevant to Contractor's employment needs, especially those programs funded or approved by the Department of Labor. Contractor shall provide notice of these programs to the sources compiled under 7b above.

f. Disseminate Contractor's EEO policy by providing notice of the policy to unions and training programs and requesting their cooperation in assisting Contractor in meeting its EEO obligations; by including it in any policy manual and collective bargaining agreement; by publicizing it in the company newspaper, annual report, etc.; by specific review of the policy with all management

personnel and with all minority and female employees at least once a year; and by posting the company EEO policy on bulletin boards accessible to all employees at each location where construction work is performed.

g. Review, at least annually, the company's EEO policy and affirmative action obligations under these specifications with all employees having any responsibility for hiring, assignment, layoff, termination, or other employment decisions including specific review of these items with onsite supervisory personnel such superintendents, general foremen, etc., prior to the initiation of construction work at any job site. A written record shall be made and maintained identifying the time and place of these meetings, persons attending, subject matter discussed, and disposition of the subject matter.

h. Disseminate Contractor's EEO policy externally by including it in any advertising in the news media, specifically including minority and female news media, and providing written notification to and discussing Contractor's EEO policy with other contractors and subcontractors with whom Contractor does or anticipates doing business.

i. Direct its recruitment efforts, both oral and written, to minority, female, and community organizations, to schools with minority and female students and to minority and female recruitment and training organizations serving Contractor's recruitment area and employment needs. Not later than one month prior to the date for the acceptance of applications for apprenticeship or other training by any recruitment source, Contractor shall send written notification to organizations such as the above, describing the openings, screening procedures, and tests to be used in the selection process.

j. Encourage present minority and female employees to recruit other minority persons and women and, where reasonable, provide after school, summer, and vacation employment to minority and female youth both on the site and in other areas of a contractor's work force.

k. Validate all tests and other selection requirements where there is an obligation to do so under 41 CFR part 60-3.

l. Conduct, at least annually, an inventory and evaluation at least of all minority and female personnel, for promotional opportunities and encourage these employees to seek or to prepare for, through appropriate training, etc., such opportunities.

m. Ensure that seniority practices, job classifications, work assignments, and other personnel practices do not have a discriminatory effect by continually monitoring all personnel and employment related activities to ensure that the EEO policy and Contractor's obligations under these specifications are being carried out.

n. Ensure that all facilities and company activities are nonsegregated except that separate or single-user toilet and necessary changing facilities shall be provided to assure privacy between the sexes.

o. Document and maintain a record of all solicitations of offers for subcontracts from minority and female construction contractors and suppliers, including circulation of solicitations to minority and female contractor associations and other business associations.

p. Conduct a review, at least annually, of all supervisor's adherence to and performance under Contractor's EEO policies and affirmative action obligations.

8. Contractors are encouraged to participate in voluntary associations, which assist in fulfilling one or more of their affirmative action obligations (7a through 7p). The efforts of a contractor association, joint contractor-union, contractor-community, or other similar group of which Contractor is a member and participant may be asserted as fulfilling any one or more of its obligations under 7a through 7p of these specifications provided that Contractor actively participates in the group, makes every effort to assure that the group has a positive impact on the employment of minorities and women in the industry, ensures that the concrete benefits of the program are reflected in Contractor's minority and female workforce participation, makes a good faith effort to meet its individual goals and timetables, and can provide access to documentation which demonstrates the effectiveness of actions taken on behalf of Contractor. The obligation to comply, however, is Contractor's and failure of such a group to fulfill an obligation shall not be a defense for Contractor's noncompliance.

9. A single goal for minorities and a separate single goal for women have been established. Contractor, however, is required to provide equal employment opportunity and to take affirmative action for all minority groups, both male and female, and all women, both minority and non-minority. Consequently, Contractor may be in violation of the Executive Order if a particular group is employed in a substantially disparate manner (for example, even though Contractor has achieved its goals for women generally, Contractor may be in violation of the Executive Order if a specific minority group of women is underutilized).

10. Contractor shall not use the goals and timetables or affirmative action standards to discriminate against any person because of race, color, religion, sex, sexual orientation, gender identity, or national origin.

11. Contractor shall not enter into any subcontract with any person or firm debarred from Government contracts pursuant to Executive Order 11246.

12. Contractor shall carry out such sanctions and penalties for violation of these specifications and of the Equal Opportunity Clause, including suspension, termination, and cancellation of existing subcontracts as may be imposed or ordered pursuant to Executive Order 11246, as amended, and its implementing regulations, by the Office of Federal Contract Compliance Programs. Any contractor who fails to carry out such sanctions and penalties shall be in violation of these specifications and Executive Order 11246, as amended.

13. Contractor, in fulfilling its obligations under these specifications, shall implement specific affirmative action steps, at least as extensive as those standards prescribed in paragraph 7 of these specifications, so as to achieve maximum results from its efforts to ensure equal employment opportunity. If Contractor fails to comply with the requirements of the Executive Order, the implementing regulations, or these specifications, the Director shall proceed in accordance with 41 CFR part 60-4.8.

14. Contractor shall designate a responsible official to monitor all employment related activity to ensure that the company EEO policy is being carried out, to submit reports relating to the provisions hereof as may be required by the Government, and to keep records. Records shall at least include for each employee, the name, address, telephone numbers, construction trade, union affiliation if any, employee identification number when assigned, social security number, race, sex, status (e.g., mechanic, apprentice, trainee, helper, or laborer), dates of changes in status, hours worked per week in the indicated trade, rate of pay, and locations at which the work was performed. Records shall be maintained in an easily understandable

and retrievable form; however, to the degree that existing records satisfy this requirement, contractors shall not be required to maintain separate records.

15. Nothing herein provided shall be construed as a limitation upon the application of other laws which establish different standards of compliance or upon the application of requirements for the hiring of local or other area residents (e.g. those under the Public Works Employment Act of 1977 and the Community Development Block Grant Program).

FEDERAL FAIR LABOR STANDARDS ACT (FEDERAL MINIMUM WAGE)

All contracts and subcontracts that result from this solicitation incorporate by reference the provisions of 29 CFR part 201, et seq, the Federal Fair Labor Standards Act (FLSA), with the same force and effect as if given in full text. The FLSA sets minimum wage, overtime pay, recordkeeping, and child labor standards for full and part-time workers.

Contractor has full responsibility to monitor compliance to the referenced statute or regulation. Contractor must address any claims or disputes that arise from this requirement directly with the U.S. Department of Labor – Wage and Hour Division.

CERTIFICATION REGARDING LOBBYING

The Bidder or Offeror certifies by signing and submitting this bid or proposal, to the best of his or her knowledge and belief, that:

(1) No Federal appropriated funds have been paid or will be paid, by or on behalf of the Bidder or Offeror, to any person for influencing or attempting to influence an officer or employee of an agency, a Member of Congress, an officer or employee of Congress, or an employee of a Member of Congress in connection with the awarding of any Federal contract, the making of any Federal grant, the making of any Federal loan, the entering into of any cooperative agreement, and the extension, continuation, renewal, amendment, or modification of any Federal contract, grant, loan, or cooperative agreement.

(2) If any funds other than Federal appropriated funds have been paid or will be paid to any person for influencing or attempting to influence an officer or employee of any agency, a Member of Congress, an officer or employee of Congress, or an employee of a Member of Congress in connection with this Federal contract, grant, loan, or cooperative agreement, the undersigned shall complete and submit Standard Form-LLL, "Disclosure Form to Report Lobbying," in accordance with its instructions.

(3) The undersigned shall require that the language of this certification be included in the award documents for all sub-awards at all tiers (including subcontracts, subgrants, and contracts under grants, loans, and cooperative agreements) and that all sub-recipients shall certify and disclose accordingly.

This certification is a material representation of fact upon which reliance was placed when this transaction was made or entered into. Submission of this certification is a prerequisite for making or entering into this

transaction imposed by section 1352, title 31, U.S. Code. Any person who fails to file the required certification shall be subject to a civil penalty of not less than $10,000 and not more than $100,000 for each such failure.

PROHIBITION OF SEGREGATED FACILITIES

(a) Contractor agrees that it does not and will not maintain or provide for its employees any segregated facilities at any of its establishments, and that it does not and will not permit its employees to perform their services at any location under its control where segregated facilities are maintained. Contractor agrees that a breach of this clause is a violation of the Equal Employment Opportunity clause in this contract.

(b) "Segregated facilities," as used in this clause, means any waiting rooms, work areas, rest rooms and wash rooms, restaurants and other eating areas, time clocks, locker rooms and other storage or dressing areas, parking lots, drinking fountains, recreation or entertainment areas, transportation, and housing facilities provided for employees that are segregated by explicit directive or are in fact segregated on the basis of race, color, religion, sex, sexual orientation, gender identity, or national origin because of written or oral policies or employee custom. The term does not include separate or single-user rest rooms or necessary dressing or sleeping areas provided to assure privacy between the sexes.

(c) Contractor shall include this clause in every subcontract and purchase order that is subject to the Equal Employment Opportunity clause of this contract.

OCCUPATIONAL SAFETY AND HEALTH ACT OF 1970

All contracts and subcontracts that result from this solicitation incorporate by reference the requirements of 29 CFR Part 1910 with the same force and effect as if given in full text. The employer must provide a work environment that is free from recognized hazards that may cause death or serious physical harm to the employee. The employer retains full responsibility to monitor its compliance and their subcontractor's compliance with the applicable requirements of the Occupational Safety and Health Act of 1970 (29 CFR Part 1910). The employer must address any claims or disputes that pertain to a referenced requirement directly with the U.S. Department of Labor – Occupational Safety and Health Administration.

PROCUREMENT OF RECOVERED MATERIALS

Contractor and subcontractor agree to comply with Section 6002 of the Solid Waste Disposal Act, as amended by the Resource Conservation and Recovery Act, and the regulatory provisions of 40 CFR Part 247. In the performance of this contract and to the extent practicable, Contractor and subcontractors are to use products containing the highest percentage of recovered materials for items designated by the Environmental Protection Agency (EPA) under 40 CFR Part 247 whenever:

1) The contract requires procurement of $10,000 or more of a designated item during the fiscal year; or

2) Contractor has procured $10,000 or more of a designated item using Federal funding during the previous fiscal year.

The list of EPA-designated items is available at www.epa.gov/smm/comprehensive-procurement-guidelines-construction-products.

Section 6002(c) establishes exceptions to the preference for recovery of EPA-designated products if Contractor can demonstrate the item is:

a) Not reasonably available within a timeframe providing for compliance with the contract performance schedule;
b) Fails to meet reasonable contract performance requirements; or
c) Is only available at an unreasonable price.

CERTIFICATION OF OFFEROR/BIDDER REGARDING TAX DELINQUENCY AND FELONY CONVICTIONS

The applicant must complete the following two certification statements. The applicant must indicate its current status as it relates to tax delinquency and felony conviction by inserting a checkmark (✓) in the space following the applicable response. The applicant agrees that, if awarded a contract resulting from this solicitation, it will incorporate this provision for certification in all lower tier subcontracts.

Certifications

1) The applicant represents that it is ( ) is not ( ) a corporation that has any unpaid Federal tax liability that has been assessed, for which all judicial and administrative remedies have been exhausted or have lapsed, and that is not being paid in a timely manner pursuant to an agreement with the authority responsible for collecting the tax liability.

2) The applicant represents that it is ( ) is not ( ) a corporation that was convicted of a criminal violation under any Federal law within the preceding 24 months.

Note

If an applicant responds in the affirmative to either of the above representations, the applicant is ineligible to receive an award unless the Sponsor has received notification from the agency suspension and debarment official (SDO) that the SDO has considered suspension or debarment and determined that further action is not required to protect the Government's interests. The applicant therefore must provide information to the owner about its tax liability or conviction to the Owner, who will then notify the FAA Airports District Office, which will then notify the agency's SDO to facilitate completion of the required considerations before award decisions are made.

Term Definitions

> **Felony conviction:** Felony conviction means a conviction within the preceding twenty four (24) months of a felony criminal violation under any Federal law and includes conviction of an offense defined in a section of the U.S. Code that specifically classifies the offense as a felony and conviction of an offense that is classified as a felony under 18 USC § 3559.

Tax Delinquency: A tax delinquency is any unpaid Federal tax liability that has been assessed, for which all judicial and administrative remedies have been exhausted, or have lapsed, and that is not being paid in a timely manner pursuant to an agreement with the authority responsible for collecting the tax liability.

TERMINATION FOR CONVENIENCE (CONSTRUCTION & EQUIPMENT CONTRACTS)

The Owner may terminate this contract in whole or in part at any time by providing written notice to Contractor. Such action may be without cause and without prejudice to any other right or remedy of Owner. Upon receipt of a written notice of termination, except as explicitly directed by the Owner, Contractor shall immediately proceed with the following obligations regardless of any delay in determining or adjusting amounts due under this clause:

1. Contractor must immediately discontinue work as specified in the written notice.
2. Terminate all subcontracts to the extent they relate to the work terminated under the notice.
3. Discontinue orders for materials and services except as directed by the written notice.
4. Deliver to the Owner all fabricated and partially fabricated parts, completed and partially completed work, supplies, equipment and materials acquired prior to termination of the work, and as directed in the written notice.
5. Complete performance of the work not terminated by the notice.
6. Take action as directed by the Owner to protect and preserve property and work related to this contract that Owner will take possession.

Owner agrees to pay Contractor for:

1. Completed and acceptable work executed in accordance with the contract documents prior to the effective date of termination;
2. Documented expenses sustained prior to the effective date of termination in performing work and furnishing labor, materials, or equipment as required by the contract documents in connection with uncompleted work;
3. Reasonable and substantiated claims, costs, and damages incurred in settlement of terminated contracts with Subcontractors and Suppliers; and
4. Reasonable and substantiated expenses to Contractor directly attributable to Owner's termination action.

Owner will not pay Contractor for loss of anticipated profits or revenue or other economic loss arising out of or resulting from the Owner's termination action.

The rights and remedies this clause provides are in addition to any other rights and remedies provided by law or under this contract.

TERMINATION FOR CAUSE (CONSTRUCTION)

Section 80-09 of FAA Advisory Circular 150/5370-10 establishes standard language for conditions, rights, and remedies associated with Owner termination of this contract for cause due to default of Contractor.

TRADE RESTRICTION CERTIFICATION

By submission of an offer, the Offeror certifies that with respect to this solicitation and any resultant contract, the Offeror –

1) is not owned or controlled by one or more citizens of a foreign country included in the list of countries that discriminate against U.S. firms as published by the Office of the United States Trade Representative (USTR);

2) has not knowingly entered into any contract or subcontract for this project with a person that is a citizen or national of a foreign country included on the list of countries that discriminate against U.S. firms as published by the USTR; and

3) has not entered into any subcontract for any product to be used on the Federal project that is produced in a foreign country included on the list of countries that discriminate against U.S. firms published by the USTR.

This certification concerns a matter within the jurisdiction of an agency of the United States of America and the making of a false, fictitious, or fraudulent certification may render the maker subject to prosecution under Title 18 USC § 1001.

The Offeror/Contractor must provide immediate written notice to the Owner if the Offeror/Contractor learns that its certification or that of a subcontractor was erroneous when submitted or has become erroneous by reason of changed circumstances. Contractor must require subcontractors provide immediate written notice to Contractor if at any time it learns that its certification was erroneous by reason of changed circumstances.

Unless the restrictions of this clause are waived by the Secretary of Transportation in accordance with 49 CFR § 30.17, no contract shall be awarded to an Offeror or subcontractor:

1) who is owned or controlled by one or more citizens or nationals of a foreign country included on the list of countries that discriminate against U.S. firms published by the USTR; or
2) whose subcontractors are owned or controlled by one or more citizens or nationals of a foreign country on such USTR list; or
3) who incorporates in the public works project any product of a foreign country on such USTR list.

Nothing contained in the foregoing shall be construed to require establishment of a system of records in order to render, in good faith, the certification required by this provision. The knowledge and information of a contractor is not required to exceed that which is normally possessed by a prudent person in the ordinary course of business dealings.

The Offeror agrees that, if awarded a contract resulting from this solicitation, it will incorporate this provision for certification without modification in all lower tier subcontracts. Contractor may rely on the certification of a prospective subcontractor that it is not a firm from a foreign country included on the list of countries that discriminate against U.S. firms as published by USTR, unless the Offeror has knowledge that the certification is erroneous.

This certification is a material representation of fact upon which reliance was placed when making an award. If it is later determined that Contractor or subcontractor knowingly rendered an erroneous certification, the Federal Aviation Administration (FAA) may direct through the Owner cancellation of the contract or subcontract for default at no cost to the Owner or the FAA.

VETERAN'S PREFERENCE

In the employment of labor (excluding executive, administrative, and supervisory positions), Contractor and all sub-tier contractors must give preference to covered veterans as defined within Title 49 United States Code Section 47112. Covered veterans include Vietnam-era veterans, Persian Gulf veterans, Afghanistan-Iraq war veterans, disabled veterans, and small business concerns (as defined by 15 USC § 632) owned and controlled by disabled veterans. This preference only applies when there are covered veterans readily available and qualified to perform the work to which the employment relates.

CERTIFICATION REGARDING DOMESTIC PREFERENCES FOR PROCUREMENTS

The Bidder or Offeror certifies by signing and submitting this bid or proposal that, to the greatest extent practicable, the Bidder or Offeror has provided a preference for the purchase, acquisition, or use of goods, products, or materials produced in the United States (including, but not limited to, iron, aluminum, steel, cement, and other manufactured products) in compliance with 2 CFR § 200.322.

"General Decision Number: TX20230002 01/06/2023

Superseded General Decision Number: TX20220002

State: Texas

Construction Types: Heavy and Highway

Counties: Armstrong, Carson, Crosby, Ector, Irion, Lubbock, Midland, Potter, Randall, Taylor and Tom Green Counties in Texas.

HEAVY & HIGHWAY CONSTRUCTION PROJECTS

Note: Contracts subject to the Davis-Bacon Act are generally required to pay at least the applicable minimum wage rate required under Executive Order 14026 or Executive Order 13658. Please note that these Executive Orders apply to covered contracts entered into by the federal government that are subject to the Davis-Bacon Act itself, but do not apply to contracts subject only to the Davis-Bacon Related Acts, including those set forth at 29 CFR 5.1(a)(2)-(60).

If the contract is entered into on or after January 30, 2022, or the contract is renewed or extended (e.g., an option is exercised) on or after January 30, 2022:	. Executive Order 14026 generally applies to the contract. . The contractor must pay all covered workers at least $16.20 per hour (or the applicable wage rate listed on this wage determination, if it is higher) for all hours spent performing on the contract in 2023.
If the contract was awarded on or between January 1, 2015 and January 29, 2022, and the contract is not renewed or extended on or after January 30, 2022:	. Executive Order 13658 generally applies to the contract. . The contractor must pay all covered workers at least $12.15 per hour (or the applicable wage rate listed on this wage determination, if it is higher) for all hours spent performing on that contract in 2023.

The applicable Executive Order minimum wage rate will be adjusted annually. If this contract is covered by one of the Executive Orders and a classification considered necessary for performance of work on the contract does not appear on this wage determination, the contractor must still submit a conformance request.

Additional information on contractor requirements and worker protections under the Executive Orders is available at http://www.dol.gov/whd/govcontracts.

Modification Number	Publication Date
0	01/06/2023

SUTX2011-002 08/02/2011

	Rates	Fringes
CEMENT MASON/CONCRETE FINISHER (Paving & Structures)	$ 13.55 **	
ELECTRICIAN	$ 20.96	
FORM BUILDER/FORM SETTER		
Paving & Curb	$ 12.36 **	
Structures	$ 13.52 **	
LABORER		
Asphalt Raker	$ 12.28 **	
Flagger	$ 9.30 **	
Laborer, Common	$ 10.30 **	
Laborer, Utility	$ 11.80 **	
Work Zone Barricade Servicer	$ 10.30 **	
POWER EQUIPMENT OPERATOR:		
Asphalt Distributer	$ 14.87 **	
Asphalt Paving Machine	$ 13.40 **	
Broom and Sweeper	$ 11.21 **	
Crane, Lattice Boom 80 Tons or Less	$ 16.82	
Crawler Tractor Operator	$ 13.96 **	
Excavator, 50,000 lbs or less	$ 13.46 **	
Front End Loader Operator, Over 3 CY	$ 12.77 **	
Front End Loader, 3CY or less	$ 12.28 **	
Loader/Backhoe	$ 14.18 **	

```
     Mechanic....................$ 20.14
     Milling Machine.............$ 15.54 **
     Motor Grader,  Rough........$ 16.15 **
     Motor Grader, Fine..........$ 17.49
     Pavement Marking Machine....$ 16.42
     Reclaimer/Pulverizer........$ 12.85 **
     Roller, Asphalt.............$ 10.95 **
     Roller, Other...............$ 10.36 **
     Scraper.....................$ 10.61 **
     Spreader Box................$ 12.60 **

Servicer.........................$ 13.98 **

Steel Worker (Reinforcing).......$ 13.50 **

TRUCK DRIVER
     Lowboy-Float................$ 14.46 **
     Single Axle.................$ 12.74 **
     Single or Tandem Axle Dump..$ 11.33 **
     Tandem Axle Tractor with
     Semi........................$ 12.49 **
----------------------------------------------------------------

WELDERS - Receive rate prescribed for craft performing
operation to which welding is incidental.

================================================================

** Workers in this classification may be entitled to a higher
minimum wage under Executive Order 14026 ($16.20) or 13658
($12.15).  Please see the Note at the top of the wage
determination for more information.

Note: Executive Order (EO) 13706, Establishing Paid Sick Leave
for Federal Contractors applies to all contracts subject to the
Davis-Bacon Act for which the contract is awarded (and any
solicitation was issued) on or after January 1, 2017.  If this
contract is covered by the EO, the contractor must provide
employees with 1 hour of paid sick leave for every 30 hours
they work, up to 56 hours of paid sick leave each year.
Employees must be permitted to use paid sick leave for their
own illness, injury or other health-related needs, including
preventive care; to assist a family member (or person who is
like family to the employee) who is ill, injured, or has other
health-related needs, including preventive care; or for reasons
resulting from, or to assist a family member (or person who is
like family to the employee) who is a victim of, domestic
violence, sexual assault, or stalking.  Additional information
on contractor requirements and worker protections under the EO
is available at
```

https://www.dol.gov/agencies/whd/government-contracts.

Unlisted classifications needed for work not included within the scope of the classifications listed may be added after award only as provided in the labor standards contract clauses (29CFR 5.5 (a) (1) (ii)).

The body of each wage determination lists the classification and wage rates that have been found to be prevailing for the cited type(s) of construction in the area covered by the wage determination. The classifications are listed in alphabetical order of ""identifiers"" that indicate whether the particular rate is a union rate (current union negotiated rate for local), a survey rate (weighted average rate) or a union average rate (weighted union average rate).

Union Rate Identifiers

A four letter classification abbreviation identifier enclosed in dotted lines beginning with characters other than ""SU"" or ""UAVG"" denotes that the union classification and rate were prevailing for that classification in the survey. Example: PLUM0198-005 07/01/2014. PLUM is an abbreviation identifier of the union which prevailed in the survey for this classification, which in this example would be Plumbers. 0198 indicates the local union number or district council number where applicable, i.e., Plumbers Local 0198. The next number, 005 in the example, is an internal number used in processing the wage determination. 07/01/2014 is the effective date of the most current negotiated rate, which in this example is July 1, 2014.

Union prevailing wage rates are updated to reflect all rate changes in the collective bargaining agreement (CBA) governing this classification and rate.

Survey Rate Identifiers

Classifications listed under the ""SU"" identifier indicate that no one rate prevailed for this classification in the survey and the published rate is derived by computing a weighted average rate based on all the rates reported in the survey for that classification. As this weighted average rate includes all rates reported in the survey, it may include both union and non-union rates. Example: SULA2012-007 5/13/2014. SU indicates the rates are survey rates based on a weighted average

calculation of rates and are not majority rates. LA indicates the State of Louisiana. 2012 is the year of survey on which these classifications and rates are based. The next number, 007 in the example, is an internal number used in producing the wage determination. 5/13/2014 indicates the survey completion date for the classifications and rates under that identifier.

Survey wage rates are not updated and remain in effect until a new survey is conducted.

Union Average Rate Identifiers

Classification(s) listed under the UAVG identifier indicate that no single majority rate prevailed for those classifications; however, 100% of the data reported for the classifications was union data. EXAMPLE: UAVG-OH-0010 08/29/2014. UAVG indicates that the rate is a weighted union average rate. OH indicates the state. The next number, 0010 in the example, is an internal number used in producing the wage determination. 08/29/2014 indicates the survey completion date for the classifications and rates under that identifier.

A UAVG rate will be updated once a year, usually in January of each year, to reflect a weighted average of the current negotiated/CBA rate of the union locals from which the rate is based.

WAGE DETERMINATION APPEALS PROCESS

1.) Has there been an initial decision in the matter? This can be:

* an existing published wage determination
* a survey underlying a wage determination
* a Wage and Hour Division letter setting forth a position on a wage determination matter
* a conformance (additional classification and rate) ruling

On survey related matters, initial contact, including requests for summaries of surveys, should be with the Wage and Hour National Office because National Office has responsibility for the Davis-Bacon survey program. If the response from this initial contact is not satisfactory, then the process described in 2.) and 3.) should be followed.

With regard to any other matter not yet ripe for the formal

process described here, initial contact should be with the Branch of Construction Wage Determinations. Write to:

Branch of Construction Wage Determinations
Wage and Hour Division
U.S. Department of Labor
200 Constitution Avenue, N.W.
Washington, DC 20210

2.) If the answer to the question in 1.) is yes, then an interested party (those affected by the action) can request review and reconsideration from the Wage and Hour Administrator (See 29 CFR Part 1.8 and 29 CFR Part 7). Write to:

Wage and Hour Administrator
U.S. Department of Labor
200 Constitution Avenue, N.W.
Washington, DC 20210

The request should be accompanied by a full statement of the interested party's position and by any information (wage payment data, project description, area practice material, etc.) that the requestor considers relevant to the issue.

3.) If the decision of the Administrator is not favorable, an interested party may appeal directly to the Administrative Review Board (formerly the Wage Appeals Board). Write to:

Administrative Review Board
U.S. Department of Labor
200 Constitution Avenue, N.W.
Washington, DC 20210

4.) All decisions by the Administrative Review Board are final.

==========

END OF GENERAL DECISIO"

TECHNICAL SPECIFICATIONS

Part 1 – General Contract Provisions

Section 10 Definition of Terms

When the following terms are used in these Specifications, in the contract, or in any documents or other instruments pertaining to construction where these Specifications govern, the intent and meaning shall be defined as follows:

Paragraph Number	Term	Definition
10-01	**AASHTO**	The American Association of State Highway and Transportation Officials.
10-02	**Access Road**	The right-of-way, the roadway and all improvements constructed thereon connecting the airport to a public roadway.
10-03	**Advertisement**	A public announcement, as required by local law, inviting bids for work to be performed and materials to be furnished.
10-04	**Airport**	Airport means an area of land or water which is used or intended to be used for the landing and takeoff of aircraft; an appurtenant area used or intended to be used for airport buildings or other airport facilities or rights of way; airport buildings and facilities located in any of these areas, and a heliport.
10-05	**Airport Improvement Program (AIP)**	A grant-in-aid program, administered by the Federal Aviation Administration (FAA).
10-06	**Air Operations Area (AOA)**	The term air operations area (AOA) shall mean any area of the airport used or intended to be used for the landing, takeoff, or surface maneuvering of aircraft. An air operation area shall include such paved or unpaved areas that are used or intended to be used for the unobstructed movement of aircraft in addition to its associated runway, taxiway, or apron.
10-07	**Apron**	Area where aircraft are parked, unloaded or loaded, fueled and/or serviced.
10-08	**ASTM International (ASTM)**	Formerly known as the American Society for Testing and Materials (ASTM).
10-09	**Award**	Owner's notice to the successful Bidder of the acceptance of the submitted bid.
10-10	**Bidder**	Any individual, partnership, firm, or corporation, acting directly or through a duly authorized representative, who submits a proposal for the work contemplated.

Paragraph Number	Term	Definition
10-11	**Building Area**	An area on the airport to be used, considered, or intended to be used for airport buildings or other airport facilities or rights-of-way together with all airport buildings and facilities located thereon.
10-12	**Calendar Day**	Every day shown on the calendar.
10-13	**Certificate of Analysis (COA)**	The COA is the manufacturer's Certificate of Compliance (COC) including all applicable test results required by the specifications.
10-14	**Certificate of Compliance (COC)**	The manufacturer's certification stating that materials or assemblies furnished fully comply with the requirements of the contract. The certificate shall be signed by the manufacturer's authorized representative.
10-15	**Change Order**	A written order to Contractor covering changes in the plans, specifications, or proposal quantities and establishing the basis of payment and contract time adjustment, if any, for work within the scope of the contract and necessary to complete the project.
10-16	**Contract**	A written agreement between Owner and Contractor that establishes the obligations of the parties including but not limited to performance of work, furnishing of labor, equipment and materials and the basis of payment. The awarded contract includes but may not be limited to: Advertisement, Contract form, Proposal, Performance bond, payment bond, General provisions, certifications and representations, Technical Specifications, Plans, Supplemental Provisions, standards incorporated by reference and issued addenda.
10-17	**Contract Item (Pay Item)**	A specific unit of work for which a price is provided in the contract.
10-18	**Contract Time**	The number of calendar days or working days, stated in the proposal, allowed for completion of the contract, including authorized time extensions. If a calendar date of completion is stated in the proposal, in lieu of a number of calendar or working days, the contract shall be completed by that date.
10-19	**Contractor**	The individual, partnership, firm, or corporation primarily liable for the acceptable performance of the work contracted and for the payment of all legal debts pertaining to the work who acts directly or through lawful agents or employees to complete the contract work.
10-20	**Contractors Quality Control (QC) Facilities**	Contractor's QC facilities in accordance with Contractor Quality Control Program (CQCP).

Paragraph Number	Term	Definition
10-21	**Contractor Quality Control Program (CQCP)**	Details the methods and procedures that will be taken to assure that all materials and completed construction required by the contract conform to contract plans, technical specifications and other requirements, whether manufactured by Contractor, or procured from subcontractors or vendors.
10-22	**Control Strip**	A demonstration by Contractor that the materials, equipment, and construction processes results in a product meeting the requirements of the specification.
10-23	**Construction Safety and Phasing Plan (CSPP)**	The overall plan for safety and phasing of a construction project developed by the airport operator, or developed by the airport operator's consultant and approved by the airport operator. It is included in the invitation for bids and becomes part of the project specifications.
10-24	**Drainage System**	The system of pipes, ditches, and structures by which surface or subsurface waters are collected and conducted from the airport area.
10-25	**Engineer**	The individual, partnership, firm, or corporation duly authorized by Owner to be responsible for engineering, inspection, and/or observation of the contract work and acting directly or through an authorized representative.
10-26	**Equipment**	All machinery, together with the necessary supplies for upkeep and maintenance; and all tools and apparatus necessary for the proper construction and acceptable completion of the work.
10-27	**Extra Work**	An item of work not provided for in the awarded contract as previously modified by change order or supplemental agreement, but which is found by Owner's Engineer or Resident Project Representative (RPR) to be necessary to complete the work within the intended scope of the contract as previously modified.
10-28	**FAA**	The Federal Aviation Administration. When used to designate a person, FAA shall mean the Administrator or their duly authorized representative.
10-29	**Federal Specifications**	The federal specifications and standards, commercial item descriptions, and supplements, amendments, and indices prepared and issued by the General Services Administration.

Paragraph Number	Term	Definition
10-30	**Force Account**	**a.** Contract Force Account - A method of payment that addresses extra work performed by Contractor on a time and material basis. **b.** Owner Force Account - Work performed for the project by Owner's employees.
10-31	**Intention of Terms**	Whenever, in these Specifications or on the plans, the words "directed," "required," "permitted," "ordered," "designated," "prescribed," or words of like import are used, it shall be understood that the direction, requirement, permission, order, designation, or prescription of Engineer and/or Resident Project Representative (RPR) is intended; and similarly, the words "approved," "acceptable," "satisfactory," or words of like import, shall mean approved by, or acceptable to, or satisfactory to Engineer and/or RPR, subject in each case to the final determination of Owner. Any reference to a specific requirement of a numbered paragraph of the contract specifications or a cited standard shall be interpreted to include all general requirements of the entire section, specification item, or cited standard that may be pertinent to such specific reference.
10-32	**Lighting**	A system of fixtures providing or controlling the light sources used on or near the airport or within the airport buildings. The field lighting includes all luminous signals, markers, floodlights, and illuminating devices used on or near the airport or to aid in the operation of aircraft landing at, taking off from, or taxiing on the airport surface.
10-33	**Major and Minor Contract Items**	A major contract item shall be any item that is listed in the proposal, the total cost of which is equal to or greater than 20% of the total amount of the award contract. All other items shall be considered minor contract items.
10-34	**Materials**	Any substance specified for use in the construction of the contract work.
10-35	**Modification of Standards (MOS)**	Any deviation from standard specifications applicable to material and construction methods in accordance with FAA Order 5300.1.
10-36	**Notice to Proceed (NTP)**	A written notice to Contractor to begin the actual contract work on a previously agreed to date. If applicable, the Notice to Proceed shall state the date on which the contract time begins.
10-37	**Owner**	The term "Owner" shall mean the party of the first part or the contracting agency signatory to the contract. Where the term "Owner" is capitalized in this document, it shall mean airport Sponsor only. Owner for this project is **Midland International Air & Space Port**.

Paragraph Number	Term	Definition
10-38	Passenger Facility Charge (PFC)	Per 14 Code of Federal Regulations (CFR) Part 158 and 49 United States Code (USC) § 40117, a PFC is a charge imposed by a public agency on passengers enplaned at a commercial service airport it controls.
10-39	**Pavement Structure**	The combined surface course, base course(s), and subbase course(s), if any, considered as a single unit.
10-40	**Payment bond**	The approved form of security furnished by Contractor and their own surety as a guaranty that Contractor will pay in full all bills and accounts for materials and labor used in the construction of the work.
10-41	**Performance bond**	The approved form of security furnished by Contractor and their own surety as a guaranty that Contractor will complete the work in accordance with the terms of the contract.
10-42	**Plans**	The official drawings or exact reproductions which show the location, character, dimensions and details of the airport and the work to be done and which are to be considered as a part of the contract, supplementary to the specifications. Plans may also be referred to as 'Contract Drawings.'
10-43	**Project**	The agreed scope of work for accomplishing specific airport development with respect to a particular airport.
10-44	**Proposal**	The written offer of the Bidder (when submitted on the approved proposal form) to perform the contemplated work and furnish the necessary materials in accordance with the provisions of the plans and specifications.
10-45	**Proposal guaranty**	The security furnished with a proposal to guarantee that the Bidder will enter into a contract if their own proposal is accepted by Owner.
10-46	**Quality Assurance (QA)**	Owner's responsibility to assure that construction work completed complies with specifications for payment.
10-47	**Quality Control (QC)**	Contractor's responsibility to control material(s) and construction processes to complete construction in accordance with project specifications.
10-48	**Quality Assurance (QA) Inspector**	An authorized representative of Engineer and/or Resident Project Representative (RPR) assigned to make all necessary inspections, observations, tests, and/or observation of tests of the work performed or being performed, or of the materials furnished or being furnished by Contractor.

Paragraph Number	Term	Definition
10-49	**Quality Assurance (QA) Laboratory**	The official quality assurance testing laboratories of Owner or such other laboratories as may be designated by Engineer or RPR. May also be referred to as Engineer's, Owner's, or QA Laboratory.
10-50	**Resident Project Representative (RPR)**	The individual, partnership, firm, or corporation duly authorized by Owner to be responsible for all necessary inspections, observations, tests, and/or observations of tests of the contract work performed or being performed, or of the materials furnished or being furnished by Contractor, and acting directly or through an authorized representative.
10-51	**Runway**	The area on the airport prepared for the landing and takeoff of aircraft.
10-52	**Runway Safety Area (RSA)**	A defined surface surrounding the runway prepared or suitable for reducing the risk of damage to aircraft. See the construction safety and phasing plan (CSPP) for limits of the RSA.
10-53	**Safety Plan Compliance Document (SPCD)**	Details how Contractor will comply with the CSPP.
10-54	**Specifications**	A part of the contract containing the written directions and requirements for completing the contract work. Standards for specifying materials or testing which are cited in the contract specifications by reference shall have the same force and effect as if included in the contract physically.
10-55	**Sponsor**	A Sponsor is defined in 49 USC § 47102(24) as a public agency that submits to the FAA for an AIP grant; or a private Owner of a public-use airport that submits to the FAA an application for an AIP grant for the airport.
10-56	**Structures**	Airport facilities such as bridges; culverts; catch basins, inlets, retaining walls, cribbing; storm and sanitary sewer lines; water lines; underdrains; electrical ducts, manholes, handholes, lighting fixtures and bases; transformers; navigational aids; buildings; vaults; and, other manmade features of the airport that may be encountered in the work and not otherwise classified herein.
10-57	**Subgrade**	The soil that forms the pavement foundation.
10-58	**Superintendent**	Contractor's executive representative who is present on the work during progress, authorized to receive and fulfill instructions from the RPR, and who shall supervise and direct the construction.

Paragraph Number	Term	Definition
10-59	**Supplemental Agreement**	A written agreement between Contractor and Owner that establishes the basis of payment and contract time adjustment, if any, for the work affected by the supplemental agreement. A supplemental agreement is required if: (1) in-scope work would increase or decrease the total amount of the awarded contract by more than 25%: (2) in-scope work would increase or decrease the total of any major contract item by more than 25%; (3) work that is not within the scope of the originally awarded contract; or (4) adding or deleting of a major contract item.
10-60	**Surety**	The corporation, partnership, or individual, other than Contractor, executing payment or performance bonds that are furnished to Owner by Contractor.
10-61	**Taxilane**	A taxiway designed for low-speed movement of aircraft between aircraft parking areas and terminal areas.
10-62	**Taxiway**	The portion of the air operations area of an airport that has been designated by competent airport authority for movement of aircraft to and from the airport's runways, aircraft parking areas, and terminal areas.
10-63	**Taxiway/Taxilane Safety Area (TSA)**	A defined surface alongside the taxiway prepared or suitable for reducing the risk of damage to an aircraft. See the construction safety and phasing plan (CSPP) for limits of the TSA.
10-64	**Work**	The furnishing of all labor, materials, tools, equipment, and incidentals necessary or convenient to Contractor's performance of all duties and obligations imposed by the contract, plans, and specifications.
10-65	**Working day**	A working day shall be any day other than a legal holiday, Saturday, or Sunday on which the normal working forces of Contractor may proceed with regular work for at least six (6) hours toward completion of the contract. When work is suspended for causes beyond Contractor's control, it will not be counted as a working day. Saturdays, Sundays and holidays on which Contractor's forces engage in regular work will be considered as working days.
10-66	**Owner Defined terms**	**None**

END OF SECTION 10

Section 20 Proposal Requirements and Conditions

20-01 Advertisement (Notice to Bidders). Project Advertisement and Instruction to Bidders may be found in Sections A-1 and IB-1, respectively, of the front end portion of the Project Manual.

20-02 Qualification of Bidders. Each Bidder shall submit evidence of competency and evidence of financial responsibility to perform the work to Owner at the time of bid opening.

Evidence of competency, unless otherwise specified, shall consist of statements covering the Bidder's past experience on similar work, and a list of equipment and a list of key personnel that would be available for the work.

Each Bidder shall furnish Owner satisfactory evidence of their financial responsibility. Evidence of financial responsibility, unless otherwise specified, shall consist of a confidential statement or report of the Bidder's financial resources and liabilities as of the last calendar year or the Bidder's last fiscal year. Such statements or reports shall be certified by a public accountant. At the time of submitting such financial statements or reports, the Bidder shall further certify whether their financial responsibility is approximately the same as stated or reported by the public accountant. If the Bidder's financial responsibility has changed, the Bidder shall qualify the public accountant's statement or report to reflect the Bidder's true financial condition at the time such qualified statement or report is submitted to Owner.

Unless otherwise specified, a Bidder may submit evidence that they are prequalified with the State Highway Division and are on the current "Bidder's list" of the state in which the proposed work is located. Evidence of State Highway Division prequalification may be submitted as evidence of financial responsibility in lieu of the certified statements or reports specified above.

20-03 Contents of proposal forms. Owner's proposal forms state the location and description of the proposed construction; the place, date, and time of opening of the proposals; and the estimated quantities of the various items of work to be performed and materials to be furnished for which unit bid prices are asked. The proposal form states the time in which the work must be completed, and the amount of the proposal guaranty that must accompany the proposal. Owner will accept only those Proposals properly executed on physical forms or electronic forms provided by Owner. Bidder actions that may cause Owner to deem a proposal irregular are given in paragraph 20-09 *Irregular proposals*.

Mobilization is limited to 10 percent of the total project cost.

A prebid conference is required on this project to discuss as a minimum, the following items: material requirements; submittals; Quality Control/Quality Assurance requirements; the construction safety and phasing plan including airport access and staging areas; and unique airfield paving construction requirements. See Section IB-2 – Instruction to Bidders for location and time of meeting.

20-04 Issuance of proposal forms. Owner reserves the right to refuse to issue a proposal form to a prospective Bidder if the Bidder is in default for any of the following reasons:

a. Failure to comply with any prequalification regulations of Owner, if such regulations are cited, or otherwise included, in the proposal as a requirement for bidding.

b. Failure to pay, or satisfactorily settle, all bills due for labor and materials on former contracts in force with Owner at the time Owner issues the proposal to a prospective Bidder.

c. Documented record of Contractor default under previous contracts with Owner.

d. Documented record of unsatisfactory work on previous contracts with Owner.

20-05 Interpretation of estimated proposal quantities. An estimate of quantities of work to be done and materials to be furnished under these Specifications is given in the proposal. It is the result of careful calculations and is believed to be correct. It is given only as a basis for comparison of proposals and the award of the contract. Owner does not expressly, or by implication, agree that the actual quantities involved will correspond exactly therewith; nor shall the Bidder plead misunderstanding or deception because of such estimates of quantities, or of the character, location, or other conditions pertaining to the work. Payment to Contractor will be made only for the actual quantities of work performed or materials furnished in accordance with the plans and specifications. It is understood that the quantities may be increased or decreased as provided in the Section 40, paragraph 40-02, Alteration of Work and Quantities, without in any way invalidating the unit bid prices.

20-06 Examination of plans, specifications, and site. The Bidder is expected to carefully examine the site of the proposed work, the proposal, plans, specifications, and contract forms. Bidders shall satisfy themselves to the character, quality, and quantities of work to be performed, materials to be furnished, and to the requirements of the proposed contract. The submission of a proposal shall be prima facie evidence that the Bidder has made such examination and is satisfied to the conditions to be encountered in performing the work and the requirements of the proposed contract, plans, and specifications.

20-07 Preparation of proposal. The Bidder shall submit their proposal on the forms furnished by Owner. All blank spaces in the proposal forms, unless explicitly stated otherwise, must be correctly filled in where indicated for each and every item for which a quantity is given. The Bidder shall state the price (written in ink or typed) both in words and numerals which they propose for each pay item furnished in the proposal. In case of conflict between words and numerals, the words, unless obviously incorrect, shall govern.

The Bidder shall correctly sign the proposal in ink. If the proposal is made by an individual, their name and post office address must be shown. If made by a partnership, the name and post office address of each member of the partnership must be shown. If made by a corporation, the person signing the proposal shall give the name of the state where the corporation was chartered and the name, titles, and business address of the president, secretary, and the treasurer. Anyone signing a proposal as an agent shall file evidence of their authority to do so and that the signature is binding upon the firm or corporation.

20-08 Responsive and responsible Bidder. A responsive bid conforms to all significant terms and conditions contained in Owner's invitation for bid. It is Owner's responsibility to decide if the exceptions taken by a Bidder to the solicitation are material or not and the extent of deviation it is willing to accept.

A responsible Bidder has the ability to perform successfully under the terms and conditions of a proposed procurement, as defined in 2 CFR § 200.318(h). This includes such matters as Contractor integrity, compliance with public policy, record of past performance, and financial and technical resources.

20-09 Irregular proposals. Proposals shall be considered irregular for the following reasons:

a. If the proposal is on a form other than that furnished by Owner, or if Owner's form is altered, or if any part of the proposal form is detached.

b. If there are unauthorized additions, conditional or alternate pay items, or irregularities of any kind that make the proposal incomplete, indefinite, or otherwise ambiguous.

c. If the proposal does not contain a unit price for each pay item listed in the proposal, except in the case of authorized alternate pay items, for which the Bidder is not required to furnish a unit price.

d. If the proposal contains unit prices that are obviously unbalanced.

e. If the proposal is not accompanied by the proposal guaranty specified by Owner.

f. If the applicable Disadvantaged Business Enterprise information is incomplete.

Owner reserves the right to reject any irregular proposal and the right to waive technicalities if such waiver is in the best interest of Owner and conforms to local laws and ordinances pertaining to the letting of construction contracts.

20-10 Bid guarantee. Each separate proposal shall be accompanied by a bid bond, certified check, or other specified acceptable collateral, in the amount specified in the proposal form. Such bond, check, or collateral, shall be made payable to Owner.

20-11 Delivery of proposal. Each proposal submitted shall be placed in a sealed envelope plainly marked with the project number, location of airport, and name and business address of the Bidder on the outside. When sent by mail, preferably registered, the sealed proposal, marked as indicated above, should be enclosed in an additional envelope. No proposal will be considered unless received at the place specified in the advertisement or as modified by Addendum before the time specified for opening all bids. Proposals received after the bid opening time shall be returned to the Bidder unopened.

20-12 Withdrawal or revision of proposals. A Bidder may withdraw or revise (by withdrawal of one proposal and submission of another) a proposal provided that the Bidder's request for withdrawal is received by Owner in writing before the time specified for opening bids. Revised proposals must be received at the place specified in the advertisement before the time specified for opening all bids.

20-13 Public opening of proposals. Proposals shall be opened, and read, publicly at the time and place specified in the advertisement. Bidders, their authorized agents, and other interested persons are invited to attend. Proposals that have been withdrawn (by written or telegraphic request) or received after the time specified for opening bids shall be returned to the Bidder unopened.

20-14 Disqualification of Bidders. A Bidder shall be considered disqualified for any of the following reasons:

a. Submitting more than one proposal from the same partnership, firm, or corporation under the same or different name.

b. Evidence of collusion among Bidders. Bidders participating in such collusion shall be disqualified as Bidders for any future work of Owner until any such participating Bidder has been reinstated by Owner as a qualified Bidder.

c. If the Bidder is considered to be in "default" for any reason specified in paragraph 20-04, *Issuance of Proposal Forms,* of this section.

20-15 Discrepancies and Omissions. A Bidder who discovers discrepancies or omissions with the project bid documents shall immediately notify Owner's Engineer of the matter. A Bidder that has doubt as to the true meaning of a project requirement may submit to Owner's Engineer a written request for interpretation no later than **three** days prior to bid opening.

Any interpretation of the project bid documents by Owner's Engineer will be by written addendum issued by Owner. Owner will not consider any instructions, clarifications or interpretations of the bidding documents in any manner other than written addendum.

END OF SECTION 20

Page Intentionally Blank

PACKET 9.129 July 11, 2023

Section 30 Award and Execution of Contract

30-01 Consideration of proposals. After the proposals are publicly opened and read, they will be compared on the basis of the summation of the products obtained by multiplying the estimated quantities shown in the proposal by the unit bid prices. If a Bidder's proposal contains a discrepancy between unit bid prices written in words and unit bid prices written in numbers, the unit bid price written in words shall govern.

Until the award of a contract is made, Owner reserves the right to reject a Bidder's proposal for any of the following reasons:

a. If the proposal is irregular as specified in Section 20, paragraph 20-09, *Irregular Proposals*.

b. If the Bidder is disqualified for any of the reasons specified Section 20, paragraph 20-14, *Disqualification of Bidders*.

In addition, until the award of a contract is made, Owner reserves the right to reject any or all proposals, waive technicalities, if such waiver is in the best interest of Owner and is in conformance with applicable state and local laws or regulations pertaining to the letting of construction contracts; advertise for new proposals; or proceed with the work otherwise. All such actions shall promote Owner's best interests.

30-02 Award of contract. The award of a contract, if it is to be awarded, shall be made within **90** calendar days of the date specified for publicly opening proposals, unless otherwise specified herein.

If Owner elects to proceed with an award of contract, Owner will make award to the responsible Bidder whose bid, conforming with all the material terms and conditions of the bid documents, is the lowest in price.

30-03 Cancellation of award. Owner reserves the right to cancel the award without liability to the Bidder, except return of proposal guaranty, at any time before a contract has been fully executed by all parties and is approved by Owner in accordance with paragraph 30-07 *Approval of Contract*.

30-04 Return of proposal guaranty. All proposal guaranties, except those of the two lowest Bidders, will be returned immediately after Owner has made a comparison of bids as specified in the paragraph 30-01, *Consideration of Proposals.* Proposal guaranties of the two lowest Bidders will be retained by Owner until such time as an award is made, at which time, the unsuccessful Bidder's proposal guaranty will be returned. The successful Bidder's proposal guaranty will be returned as soon as Owner receives the contract bonds as specified in paragraph 30-05, *Requirements of Contract Bonds.*

30-05 Requirements of contract bonds. At the time of the execution of the contract, the successful Bidder shall furnish Owner a surety bond or bonds that have been fully executed by the Bidder and the surety guaranteeing the performance of the work and the payment of all legal debts that may be incurred by reason of Contractor's performance of the work. The surety and the form of the bond or bonds shall be acceptable to Owner. Unless otherwise specified in this subsection, the surety bond or bonds shall be in a sum equal to the full amount of the contract.

30-06 Execution of contract. The successful Bidder shall sign (execute) the necessary agreements for entering into the contract and return the signed contract to Owner, along with the fully executed surety bond or bonds specified in paragraph 30-05, *Requirements of Contract Bonds,* of this section, within **10** calendar days from the date mailed or otherwise delivered to the successful Bidder.

30-07 Approval of contract. Upon receipt of the contract and contract bond or bonds that have been executed by the successful Bidder, Owner shall complete the execution of the contract in accordance with

local laws or ordinances, and return the fully executed contract to Contractor. Delivery of the fully executed contract to Contractor shall constitute Owner's approval to be bound by the successful Bidder's proposal and the terms of the contract.

30-08 Failure to execute contract. Failure of the successful Bidder to execute the contract and furnish an acceptable surety bond or bonds within the period specified in paragraph 30-06, *Execution of Contract,* of this section shall be just cause for cancellation of the award and forfeiture of the proposal guaranty, not as a penalty, but as liquidated damages to Owner.

END OF SECTION 30

Page Intentionally Blank

Section 40 Scope of Work

40-01 Intent of contract. The intent of the contract is to provide for construction and completion, in every detail, of the work described. It is further intended that Contractor shall furnish all labor, materials, equipment, tools, transportation, and supplies required to complete the work in accordance with the plans, specifications, and terms of the contract.

40-02 Alteration of work and quantities. Owner reserves the right to make such changes in quantities and work as may be necessary or desirable to complete, in a satisfactory manner, the original intended work. Unless otherwise specified in the Contract, Owner's Engineer or RPR shall be and is hereby authorized to make, in writing, such in-scope alterations in the work and variation of quantities as may be necessary to complete the work, provided such action does not represent a significant change in the character of the work.

For purpose of this section, a significant change in character of work means: any change that is outside the current contract scope of work; any change (increase or decrease) in the total contract cost by more than 25%; or any change in the total cost of a major contract item by more than 25%.

Work alterations and quantity variances that do not meet the definition of significant change in character of work shall not invalidate the contract nor release the surety. Contractor agrees to accept payment for such work alterations and quantity variances in accordance with Section 90, paragraph 90-03, *Compensation for Altered Quantities*.

Should the value of altered work or quantity variance meet the criteria for significant change in character of work, such altered work and quantity variance shall be covered by a supplemental agreement. Supplemental agreements shall also require consent of Contractor's surety and separate performance and payment bonds. If Owner and Contractor are unable to agree on a unit adjustment for any contract item that requires a supplemental agreement, Owner reserves the right to terminate the contract with respect to the item and make other arrangements for its completion.

40-03 Omitted items. Owner, Owner's Engineer or the RPR may provide written notice to Contractor to omit from the work any contract item that does not meet the definition of major contract item. Major contract items may be omitted by a supplemental agreement. Such omission of contract items shall not invalidate any other contract provision or requirement.

Should a contract item be omitted or otherwise ordered to be non-performed, Contractor shall be paid for all work performed toward completion of such item prior to the date of the order to omit such item. Payment for work performed shall be in accordance with Section 90, paragraph 90-04, *Payment for Omitted Items*.

40-04 Extra work. Should acceptable completion of the contract require Contractor to perform an item of work not provided for in the awarded contract as previously modified by change order or supplemental agreement, Owner may issue a Change Order to cover the necessary extra work. Change orders for extra work shall contain agreed unit prices for performing the change order work in accordance with the requirements specified in the order, and shall contain any adjustment to the contract time that, in the RPR's opinion, is necessary for completion of the extra work.

When determined by the RPR to be in Owner's best interest, the RPR may order Contractor to proceed with extra work as provided in Section 90, paragraph 90-05, *Payment for Extra Work*. Extra work that is necessary for acceptable completion of the project, but is not within the general scope of the work covered

by the original contract shall be covered by a supplemental agreement as defined in Section 10, paragraph 10-59, *Supplemental Agreement*.

If extra work is essential to maintaining the project critical path, RPR may order Contractor to commence the extra work under a Time and Material contract method. Once sufficient detail is available to establish the level of effort necessary for the extra work, Owner shall initiate a change order or supplemental agreement to cover the extra work.

Any claim for payment of extra work that is not covered by written agreement (change order or supplemental agreement) shall be rejected by Owner.

40-05 Maintenance of traffic. It is the explicit intention of the contract that the safety of aircraft, as well as Contractor's equipment and personnel, is the most important consideration. Contractor shall maintain traffic in the manner detailed in the Construction Safety and Phasing Plan (CSPP).

a. It is understood and agreed that Contractor shall provide for the free and unobstructed movement of aircraft in the air operations areas (AOAs) of the airport with respect to their own operations and the operations of all subcontractors as specified in Section 80, paragraph 80-04, *Limitation of Operations*. It is further understood and agreed that Contractor shall provide for the uninterrupted operation of visual and electronic signals (including power supplies thereto) used in the guidance of aircraft while operating to, from, and upon the airport as specified in Section 70, paragraph 70-15, *Contractor's Responsibility for Utility Service and Facilities of Others*.

b. With respect to their own operations and the operations of all subcontractors, Contractor shall provide marking, lighting, and other acceptable means of identifying personnel, equipment, vehicles, storage areas, and any work area or condition that may be hazardous to the operation of aircraft, fire-rescue equipment, or maintenance vehicles at the airport in accordance with the construction safety and phasing plan (CSPP) and the safety plan compliance document (SPCD).

c. When the contract requires the maintenance of an existing road, street, or highway during Contractor's performance of work that is otherwise provided for in the contract, plans, and specifications, Contractor shall keep the road, street, or highway open to all traffic and shall provide maintenance as may be required to accommodate traffic. Contractor, at their expense, shall be responsible for the repair to equal or better than preconstruction conditions of any damage caused by Contractor's equipment and personnel. Contractor shall furnish, erect, and maintain barricades, warning signs, flag person, and other traffic control devices in reasonable conformity with the Manual on Uniform Traffic Control Devices (MUTCD) (http://mutcd.fhwa.dot.gov/), unless otherwise specified. Contractor shall also construct and maintain in a safe condition any temporary connections necessary for ingress to and egress from abutting property or intersecting roads, streets or highways. Unless otherwise specified herein, Contractor will not be required to furnish snow removal for such existing road, street, or highway.

40-06 Removal of existing structures. All existing structures encountered within the established lines, grades, or grading sections shall be removed by Contractor, unless such existing structures are otherwise specified to be relocated, adjusted up or down, salvaged, abandoned in place, reused in the work or to remain in place. The cost of removing such existing structures shall not be measured or paid for directly, but shall be included in the various contract items.

Should Contractor encounter an existing structure (above or below ground) in the work for which the disposition is not indicated on the plans, the Resident Project Representative (RPR) shall be notified prior to disturbing such structure. The disposition of existing structures so encountered shall be immediately determined by the RPR in accordance with the provisions of the contract.

Except as provided in Section 40, paragraph 40-07, *Rights in and Use of Materials Found in the Work*, it is intended that all existing materials or structures that may be encountered (within the lines, grades, or grading

sections established for completion of the work) shall be used in the work as otherwise provided for in the contract and shall remain the property of Owner when so used in the work.

40-07 Rights in and use of materials found in the work. Should Contractor encounter any material such as (but not restricted to) sand, stone, gravel, slag, or concrete slabs within the established lines, grades, or grading sections, the use of which is intended by the terms of the contract to be embankment, Contractor may at their own option either:

a. Use such material in another contract item, providing such use is approved by the RPR and is in conformance with the contract specifications applicable to such use; or,

b. Remove such material from the site, upon written approval of the RPR; or

c. Use such material for Contractor's own temporary construction on site; or,

d. Use such material as intended by the terms of the contract.

Should Contractor wish to exercise option a., b., or c., Contractor shall request the RPR's approval in advance of such use.

Should the RPR approve Contractor's request to exercise option a., b., or c., Contractor shall be paid for the excavation or removal of such material at the applicable contract price. Contractor shall replace, at their expense, such removed or excavated material with an agreed equal volume of material that is acceptable for use in constructing embankment, backfills, or otherwise to the extent that such replacement material is needed to complete the contract work. Contractor shall not be charged for use of such material used in the work or removed from the site.

Should the RPR approve Contractor's exercise of option a., Contractor shall be paid, at the applicable contract price, for furnishing and installing such material in accordance with requirements of the contract item in which the material is used.

It is understood and agreed that Contractor shall make no claim for delays by reason of their own exercise of option a., b., or c.

Contractor shall not excavate, remove, or otherwise disturb any material, structure, or part of a structure which is located outside the lines, grades, or grading sections established for the work, except where such excavation or removal is provided for in the contract, plans, or specifications.

40-08 Final cleanup. Upon completion of the work and before acceptance and final payment will be made, Contractor shall remove from the site all machinery, equipment, surplus and discarded materials, rubbish, temporary structures, and stumps or portions of trees. Contractor shall cut all brush and woods within the limits indicated and shall leave the site in a neat and presentable condition. Material cleared from the site and deposited on adjacent property will not be considered as having been disposed of satisfactorily, unless Contractor has obtained the written permission of the property Owner.

END OF SECTION 40

Section 50 Control of Work

50-01 Authority of the Resident Project Representative (RPR). The RPR has final authority regarding the interpretation of project specification requirements. The RPR shall determine acceptability of the quality of materials furnished, method of performance of work performed, and the manner and rate of performance of the work. The RPR does not have the authority to accept work that does not conform to specification requirements.

50-02 Conformity with plans and specifications. All work and all materials furnished shall be in reasonably close conformity with the lines, grades, grading sections, cross-sections, dimensions, material requirements, and testing requirements that are specified (including specified tolerances) in the contract, plans, or specifications.

If the RPR finds the materials furnished, work performed, or the finished product not within reasonably close conformity with the plans and specifications, but that the portion of the work affected will, in their opinion, result in a finished product having a level of safety, economy, durability, and workmanship acceptable to Owner, the RPR will advise Owner of their determination that the affected work be accepted and remain in place. The RPR will document the determination and recommend to Owner a basis of acceptance that will provide for an adjustment in the contract price for the affected portion of the work. Changes in the contract price must be covered by contract change order or supplemental agreement as applicable.

If the RPR finds the materials furnished, work performed, or the finished product are not in reasonably close conformity with the plans and specifications and have resulted in an unacceptable finished product, the affected work or materials shall be removed and replaced or otherwise corrected by and at the expense of Contractor in accordance with the RPR's written orders.

The term "reasonably close conformity" shall not be construed as waiving Contractor's responsibility to complete the work in accordance with the contract, plans, and specifications. The term shall not be construed as waiving the RPR's responsibility to insist on strict compliance with the requirements of the contract, plans, and specifications during Contractor's execution of the work, when, in the RPR's opinion, such compliance is essential to provide an acceptable finished portion of the work.

The term "reasonably close conformity" is also intended to provide the RPR with the authority, after consultation with the Sponsor and FAA, to use sound engineering judgment in their determinations to accept work that is not in strict conformity, but will provide a finished product equal to or better than that required by the requirements of the contract, plans and specifications.

The RPR will not be responsible for Contractor's means, methods, techniques, sequences, or procedures of construction or the safety precautions incident thereto.

50-03 Coordination of contract, plans, and specifications. The contract, plans, specifications, and all referenced standards cited are essential parts of the contract requirements. If electronic files are provided and used on the project and there is a conflict between the electronic files and hard copy plans, the hard copy plans shall govern. A requirement occurring in one is as binding as though occurring in all. They are intended to be complementary and to describe and provide for a complete work. In case of discrepancy, calculated dimensions will govern over scaled dimensions; contract technical specifications shall govern over contract general provisions, plans, cited standards for materials or testing, and cited advisory circulars (ACs); contract general provisions shall govern over plans, cited standards for materials or testing, and cited ACs; plans shall govern over cited standards for materials or testing and cited ACs. If any paragraphs

contained in the Special Provisions conflict with General Provisions or Technical Specifications, the Special Provisions shall govern.

From time to time, discrepancies within cited testing standards occur due to the timing of the change, edits, and/or replacement of the standards. If Contractor discovers any apparent discrepancy within standard test methods, Contractor shall immediately ask the RPR for an interpretation and decision, and such decision shall be final.

Contractor shall not take advantage of any apparent error or omission on the plans or specifications. In the event Contractor discovers any apparent error or discrepancy, Contractor shall immediately notify Owner or the designated representative in writing requesting their written interpretation and decision.

50-04 List of Special Provisions.

SP-1 Scope of Work
SP-2 Contract Documents
SP-3 Time and Order of Completion
SP-4 Limitation of Operation
SP-5 Construction Activity
SP-6 Affidavit of Bills Paid
SP-7 Calendar Day
SP-8 Protection of Property
SP-9 Electric Power and Natural Gas
SP-10 Lines and Grades
SP-11 Water for Construction
SP-12 Material Tests
SP-13 Barricades, Signs, and Hazard Markings
SP-14 Prevention of Air and Water Pollution
SP-15 Public Convenience and Safety
SP-16 Final Cleaning Up
SP-17 Insurance
SP-18 Removal and Disposal of Structures, Utilities and Obstructions
SP-19 Conformity with Plans and Allowable Deviations
SP-20 Removal of Defective and Unauthorized Work
SP-21 Disputed Claims for Extra Work
SP-22 Federal Participation
SP-23 Indemnification
SP-24 Contractor's Responsibility for Work
SP-25 Correction of Faulty Work after Final Payment
SP-26 Texas State Sales Tax
SP-27 Separate Contracts
SP-28 Trench Safety
SP-29 Load Restrictions
SP-30 Notice to Proceed
SP-31 Payment for Materials on Hand
SP-32 Weighing and Measuring Equipment
SP-33 Progress Schedule
SP-34 Average Climatic Range
SP-35 Substantially Complete
SP-36 Submittals
SP-37 Geotechnical Information
SP-38 Sovereign Immunity
SP-39 Governing Law and Venue
SP-40 Third-Party Beneficiary

SP-41 Releases
SP-42 Independent Contractor
SP-43 Notice of Alleged Breach; Statutory Prerequisites
SP-44 Assignment
SP-45 Waiver of Attorney's Fees
SP-46 Prompt Pay Act
SP-47 Payment
SP-48 Project Closeout
SP-49 Disclosure of Interested Parties
SP-50 Parkhill/RPR Authority and Duty
SP-51 Anti-Boycott Statutes

50-05 Cooperation of Contractor. Contractor shall be supplied with an electronic PDF of the plans and specifications. Contractor shall have available on the construction site at all times one hardcopy each of the plans and specifications. Additional hard copies of plans and specifications may be obtained by Contractor for the cost of reproduction.

Contractor shall give constant attention to the work to facilitate the progress thereof, and shall cooperate with the RPR and their inspectors and with other Contractors in every way possible. Contractor shall have a competent superintendent on the work at all times who is fully authorized as their agent on the work. The superintendent shall be capable of reading and thoroughly understanding the plans and specifications and shall receive and fulfill instructions from the RPR or their authorized representative.

50-06 Cooperation between Contractors. Owner reserves the right to contract for and perform other or additional work on or near the work covered by this contract.

When separate contracts are let within the limits of any one project, each Contractor shall conduct the work not to interfere with or hinder the progress of completion of the work being performed by other Contractors. Contractors working on the same project shall cooperate with each other as directed.

Each Contractor involved shall assume all liability, financial or otherwise, in connection with their own contract and shall protect and hold harmless Owner from any and all damages or claims that may arise because of inconvenience, delays, or loss experienced because of the presence and operations of other Contractors working within the limits of the same project.

Contractor shall arrange their work and shall place and dispose of the materials being used to not interfere with the operations of the other Contractors within the limits of the same project. Contractor shall join their work with that of the others in an acceptable manner and shall perform it in proper sequence to that of the others.

50-07 Construction layout and stakes. Engineer/RPR shall establish necessary horizontal and vertical control. The establishment of Survey Control and/or reestablishment of survey control shall be by a State Licensed Land Surveyor. Contractor is responsible for preserving integrity of horizontal and vertical controls established by Engineer/RPR. In case of negligence on the part of Contractor or their employees, resulting in the destruction of any horizontal and vertical control, the resulting costs will be deducted as a liquidated damage against Contractor.

Prior to the start of construction, Contractor will check all control points for horizontal and vertical accuracy and certify in writing to the RPR that Contractor concurs with survey control established for the project. All lines, grades and measurements from control points necessary for the proper execution and control of the work on this project will be provided to the RPR. Contractor is responsible to establish all layout required for the construction of the project.

Copies of survey notes will be provided to the RPR for each area of construction and for each placement of material as specified to allow the RPR to make periodic checks for conformance with plan grades, alignments and grade tolerances required by the applicable material specifications. Surveys will be provided

to the RPR prior to commencing work items that cover or disturb the survey staking. Survey(s) and notes shall be provided in the following format(s): **DWG and PDF**.

Laser, GPS, String line, or other automatic control shall be checked with temporary control as necessary. In the case of error, on the part of Contractor, their surveyor, employees or subcontractors, resulting in established grades, alignment or grade tolerances that do not concur with those specified or shown on the plans, Contractor is solely responsible for correction, removal, replacement and all associated costs at no additional cost to Owner.

No direct payment will be made, unless otherwise specified in contract documents, for this labor, materials, or other expenses. The cost shall be included in the price of the bid for the various items of the Contract.

50-08 Authority and duties of Quality Assurance (QA) inspectors. QA inspectors shall be authorized to inspect all work done and all material furnished. Such QA inspection may extend to all or any part of the work and to the preparation, fabrication, or manufacture of the materials to be used. QA inspectors are not authorized to revoke, alter, or waive any provision of the contract. QA inspectors are not authorized to issue instructions contrary to the plans and specifications or to act as foreman for Contractor.

QA Inspectors are authorized to notify Contractor or their representatives of any failure of the work or materials to conform to the requirements of the contract, plans, or specifications and to reject such nonconforming materials in question until such issues can be referred to the RPR for a decision.

50-09 Inspection of the work. All materials and each part or detail of the work shall be subject to inspection. The RPR shall be allowed access to all parts of the work and shall be furnished with such information and assistance by Contractor as is required to make a complete and detailed inspection.

If the RPR requests it, Contractor, at any time before acceptance of the work, shall remove or uncover such portions of the finished work as may be directed. After examination, Contractor shall restore said portions of the work to the standard required by the specifications. Should the work thus exposed or examined prove acceptable, the uncovering, or removing, and the replacing of the covering or making good of the parts removed will be paid for as extra work; but should the work so exposed or examined prove unacceptable, the uncovering, or removing, and the replacing of the covering or making good of the parts removed will be at Contractor's expense.

Provide advance written notice to the RPR of work Contractor plans to perform each week and each day. Any work done or materials used without written notice and allowing opportunity for inspection by the RPR may be ordered removed and replaced at Contractor's expense.

Should the contract work include relocation, adjustment, or any other modification to existing facilities, not the property of the (contract) Owner, authorized representatives of Owners of such facilities shall have the right to inspect such work. Such inspection shall in no sense make any facility owner a party to the contract, and shall in no way interfere with the rights of the parties to this contract.

50-10 Removal of unacceptable and unauthorized work. All work that does not conform to the requirements of the contract, plans, and specifications will be considered unacceptable, unless otherwise determined acceptable by the RPR as provided in paragraph 50-02, *Conformity with Plans and Specifications*.

Unacceptable work, whether the result of poor workmanship, use of defective materials, damage through carelessness, or any other cause found to exist prior to the final acceptance of the work, shall be removed immediately and replaced in an acceptable manner in accordance with the provisions of Section 70, paragraph 70-14, *Contractor's Responsibility for Work*.

No removal work made under provision of this paragraph shall be done without lines and grades having been established by the RPR. Work done contrary to the instructions of the RPR, work done beyond the lines shown on the plans or as established by the RPR, except as herein specified, or any extra work done

without authority, will be considered as unauthorized and will not be paid for under the provisions of the contract. Work so done may be ordered removed or replaced at Contractor's expense.

Upon failure on the part of Contractor to comply with any order of the RPR made under the provisions of this subsection, the RPR will have authority to cause unacceptable work to be remedied or removed and replaced; and unauthorized work to be removed and recover the resulting costs as a liquidated damage against Contractor.

50-11 Load restrictions. Contractor shall comply with all legal load restrictions in the hauling of materials on public roads beyond the limits of the work. A special permit will not relieve Contractor of liability for damage that may result from the moving of material or equipment.

The operation of equipment of such weight or so loaded as to cause damage to structures or to any other type of construction will not be permitted. Hauling of materials over the base course or surface course under construction shall be limited as directed. No loads will be permitted on a concrete pavement, base, or structure before the expiration of the curing period. Contractor, at their own expense, shall be responsible for the repair to equal or better than preconstruction conditions of any damage caused by Contractor's equipment and personnel.

50-12 Maintenance during construction. Contractor shall maintain the work during construction and until the work is accepted. Maintenance shall constitute continuous and effective work prosecuted day by day, with adequate equipment and forces so that the work is maintained in satisfactory condition at all times.

In the case of a contract for the placing of a course upon a course or subgrade previously constructed, Contractor shall maintain the previous course or subgrade during all construction operations.

All costs of maintenance work during construction and before the project is accepted shall be included in the unit prices bid on the various contract items, and Contractor will not be paid an additional amount for such work.

50-13 Failure to maintain the work. Should Contractor at any time fail to maintain the work as provided in paragraph 50-12, *Maintenance during Construction*, the RPR shall immediately notify Contractor of such noncompliance. Such notification shall specify a reasonable time within which Contractor shall be required to remedy such unsatisfactory maintenance condition. The time specified will give due consideration to the exigency that exists.

Should Contractor fail to respond to the RPR's notification, Owner may suspend any work necessary for Owner to correct such unsatisfactory maintenance condition, depending on the exigency that exists. Any maintenance cost incurred by Owner, shall be recovered as a liquidated damage against Contractor.

50-14 Partial acceptance. If at any time during the execution of the project Contractor substantially completes a usable unit or portion of the work, the occupancy of which will benefit Owner, Contractor may request the RPR to make final inspection of that unit. If the RPR finds upon inspection that the unit has been satisfactorily completed in compliance with the contract, the RPR may accept it as being complete, and Contractor may be relieved of further responsibility for that unit. Such partial acceptance and beneficial occupancy by Owner shall not void or alter any provision of the contract.

50-15 Final acceptance. Upon due notice from Contractor of presumptive completion of the entire project, the RPR and Owner will make an inspection. If all construction provided for and contemplated by the contract is found to be complete in accordance with the contract, plans, and specifications, such inspection shall constitute the final inspection. The RPR shall notify Contractor in writing of final acceptance as of the date of the final inspection.

If, however, the inspection discloses any work, in whole or in part, as being unsatisfactory, the RPR will notify Contractor and Contractor shall correct the unsatisfactory work. Upon correction of the work, another inspection will be made which shall constitute the final inspection, provided the work has been satisfactorily

completed. In such event, the RPR will make the final acceptance and notify Contractor in writing of this acceptance as of the date of final inspection.

50-16 Claims for adjustment and disputes. If for any reason Contractor deems that additional compensation is due for work or materials not clearly provided for in the contract, plans, or specifications or previously authorized as extra work, Contractor shall notify the RPR in writing of their intention to claim such additional compensation before Contractor begins the work on which Contractor bases the claim. If such notification is not given or the RPR is not afforded proper opportunity by Contractor for keeping strict account of actual cost as required, then Contractor hereby agrees to waive any claim for such additional compensation. Such notice by Contractor and the fact that the RPR has kept account of the cost of the work shall not in any way be construed as proving or substantiating the validity of the claim. When the work on which the claim for additional compensation is based has been completed, Contractor shall, within 10 calendar days, submit a written claim to the RPR who will present it to Owner for consideration in accordance with local laws or ordinances.

Nothing in this subsection shall be construed as a waiver of Contractor's right to dispute final payment based on differences in measurements or computations.

END OF SECTION 50

Section 60 Control of Materials

60-01 Source of supply and quality requirements. The materials used in the work shall conform to the requirements of the contract, plans, and specifications. Unless otherwise specified, such materials that are manufactured or processed shall be new (as compared to used or reprocessed).

In order to expedite the inspection and testing of materials, Contractor shall furnish documentation to the RPR as to the origin, composition, and manufacture of all materials to be used in the work. Documentation shall be furnished promptly after execution of the contract but, in all cases, prior to delivery of such materials.

At the RPR's option, materials may be approved at the source of supply before delivery. If it is found after trial that sources of supply for previously approved materials do not produce specified products, Contractor shall furnish materials from other sources.

Contractor shall furnish airport lighting equipment that meets the requirements of the specifications; and is listed in AC 150/5345-53, *Airport Lighting Equipment Certification Program* and *Addendum*, that is in effect on the date of advertisement.

60-02 Samples, tests, and cited specifications. All materials used in the work shall be inspected, tested, and approved by the RPR before incorporation in the work unless otherwise designated. Any work in which untested materials are used without approval or written permission of the RPR shall be performed at Contractor's risk. Materials found to be unacceptable and unauthorized will not be paid for and, if directed by the RPR, shall be removed at Contractor's expense.

Unless otherwise designated, quality assurance tests will be made by and at the expense of Owner in accordance with the cited standard methods of ASTM, American Association of State Highway and Transportation Officials (AASHTO), federal specifications, Commercial Item Descriptions, and all other cited methods, which are current on the date of advertisement for bids.

The testing organizations performing on-site quality assurance field tests shall have copies of all referenced standards on the construction site for use by all technicians and other personnel. Unless otherwise designated, samples for quality assurance will be taken by a qualified representative of the RPR. All materials being used are subject to inspection, test, or rejection at any time prior to or during incorporation into the work. Copies of all tests will be furnished to Contractor's representative at their request after review and approval of the RPR.

A copy of all Contractor QC test data shall be provided to the RPR daily, along with printed reports, in an approved format, on a weekly basis. After completion of the project, and prior to final payment, Contractor shall submit a final report to the RPR showing all test data reports, plus an analysis of all results showing ranges, averages, and corrective action taken on all failing tests.

60-03 Certification of compliance/analysis (COC/COA). The RPR may permit the use, prior to sampling and testing, of certain materials or assemblies when accompanied by manufacturer's COC stating that such materials or assemblies fully comply with the requirements of the contract. The certificate shall be signed by the manufacturer. Each lot of such materials or assemblies delivered to the work must be accompanied by a certificate of compliance in which the lot is clearly identified. The COA is the manufacturer's COC and includes all applicable test results.

Materials or assemblies used on the basis of certificates of compliance may be sampled and tested at any time and if found not to be in conformity with contract requirements will be subject to rejection whether in place or not.

The form and distribution of certificates of compliance shall be as approved by the RPR.

When a material or assembly is specified by "brand name or equal" and Contractor elects to furnish the specified "or equal," Contractor shall be required to furnish the manufacturer's certificate of compliance for each lot of such material or assembly delivered to the work. Such certificate of compliance shall clearly identify each lot delivered and shall certify as to:

a. Conformance to the specified performance, testing, quality or dimensional requirements; and,

b. Suitability of the material or assembly for the use intended in the contract work.

The RPR shall be the sole judge as to whether the proposed "or equal" is suitable for use in the work.

The RPR reserves the right to refuse permission for use of materials or assemblies on the basis of certificates of compliance.

60-04 Plant inspection. The RPR or their authorized representative may inspect, at its source, any specified material or assembly to be used in the work. Manufacturing plants may be inspected from time to time for the purpose of determining compliance with specified manufacturing methods or materials to be used in the work and to obtain samples required for acceptance of the material or assembly.

Should the RPR conduct plant inspections, the following conditions shall exist:

a. The RPR shall have the cooperation and assistance of Contractor and the producer with whom Contractor has contracted for materials.

b. The RPR shall have full entry at all reasonable times to such parts of the plant that concern the manufacture or production of the materials being furnished.

c. If required by the RPR, Contractor shall arrange for adequate office or working space that may be reasonably needed for conducting plant inspections. Place office or working space in a convenient location with respect to the plant.

It is understood and agreed that Owner shall have the right to retest any material that has been tested and approved at the source of supply after it has been delivered to the site. The RPR shall have the right to reject only material which, when retested, does not meet the requirements of the contract, plans, or specifications.

60-05 Engineer/ Resident Project Representative (RPR) field office. An Engineer/RPR field office is not required.

60-06 Storage of materials. Materials shall be stored to assure the preservation of their quality and fitness for the work. Stored materials, even though approved before storage, may again be inspected prior to their use in the work. Stored materials shall be located to facilitate their prompt inspection. Contractor shall coordinate the storage of all materials with the RPR. Materials to be stored on airport property shall not create an obstruction to air navigation nor shall they interfere with the free and unobstructed movement of aircraft. Unless otherwise shown on the plans and/or CSPP, the storage of materials and the location of Contractor's plant and parked equipment or vehicles shall be as directed by the RPR. Private property shall not be used for storage purposes without written permission of Owner or lessee of such property. Contractor shall make all arrangements and bear all expenses for the storage of materials on private property. Upon request, Contractor shall furnish the RPR a copy of the property Owner's permission.

All storage sites on private or airport property shall be restored to their original condition by Contractor at their expense, except as otherwise agreed to (in writing) by Owner or lessee of the property.

60-07 Unacceptable materials. Any material or assembly that does not conform to the requirements of the contract, plans, or specifications shall be considered unacceptable and shall be rejected. Contractor shall remove any rejected material or assembly from the site of the work, unless otherwise instructed by the RPR.

Rejected material or assembly, the defects of which have been corrected by Contractor, shall not be returned to the site of the work until such time as the RPR has approved its use in the work.

60-08 Owner furnished materials. Contractor shall furnish all materials required to complete the work, except those specified, if any, to be furnished by Owner. Owner-furnished materials shall be made available to Contractor at the location specified.

All costs of handling, transportation from the specified location to the site of work, storage, and installing Owner-furnished materials shall be included in the unit price bid for the contract item in which such Owner-furnished material is used.

After any Owner-furnished material has been delivered to the location specified, Contractor shall be responsible for any demurrage, damage, loss, or other deficiencies that may occur during Contractor's handling, storage, or use of such Owner-furnished material. Owner will deduct from any monies due or to become due Contractor any cost incurred by Owner in making good such loss due to Contractor's handling, storage, or use of Owner-furnished materials.

END OF SECTION 60

Section 70 Legal Regulations and Responsibility to Public

70-01 Laws to be observed. Contractor shall keep fully informed of all federal and state laws, all local laws, ordinances, and regulations and all orders and decrees of bodies or tribunals having any jurisdiction or authority, which in any manner affect those engaged or employed on the work, or which in any way affect the conduct of the work. Contractor shall at all times observe and comply with all such laws, ordinances, regulations, orders, and decrees; and shall protect and indemnify Owner and all their officers, agents, or servants against any claim or liability arising from or based on the violation of any such law, ordinance, regulation, order, or decree, whether by Contractor or Contractor's employees.

70-02 Permits, licenses, and taxes. Contractor shall procure all permits and licenses, pay all charges, fees, and taxes, and give all notices necessary and incidental to the due and lawful execution of the work.

70-03 Patented devices, materials, and processes. If Contractor is required or desires to use any design, device, material, or process covered by letters of patent or copyright, Contractor shall provide for such use by suitable legal agreement with the Patentee or Owner. Contractor and the surety shall indemnify and hold harmless Owner, any third party, or political subdivision from any and all claims for infringement by reason of the use of any such patented design, device, material or process, or any trademark or copyright, and shall indemnify Owner for any costs, expenses, and damages which it may be obliged to pay by reason of an infringement, at any time during the execution or after the completion of the work.

70-04 Restoration of surfaces disturbed by others. Owner reserves the right to authorize the construction, reconstruction, or maintenance of any public or private utility service, FAA or National Oceanic and Atmospheric Administration (NOAA) facility, or a utility service of another government agency at any time during the progress of the work. To the extent that such construction, reconstruction, or maintenance has been coordinated with Owner, such authorized work (by others) must be shown on the plans and is indicated as follows: **None**.

Except as listed above, Contractor shall not permit any individual, firm, or corporation to excavate or otherwise disturb such utility services or facilities located within the limits of the work without the written permission of the RPR.

Should Owner of public or private utility service, FAA, or NOAA facility, or a utility service of another government agency be authorized to construct, reconstruct, or maintain such utility service or facility during the progress of the work, Contractor shall cooperate with such Owners by arranging and performing the work in this contract to facilitate such construction, reconstruction or maintenance by others whether or not such work by others is listed above. When ordered as extra work by the RPR, Contractor shall make all necessary repairs to the work which are due to such authorized work by others, unless otherwise provided for in the contract, plans, or specifications. It is understood and agreed that Contractor shall not be entitled to make any claim for damages due to such authorized work by others or for any delay to the work resulting from such authorized work.

70-05 Federal Participation. The United States Government has agreed to reimburse Owner for some portion of the contract costs. The contract work is subject to the inspection and approval of duly authorized representatives of the FAA Administrator. No requirement of this contract shall be construed as making the United States a party to the contract nor will any such requirement interfere, in any way, with the rights of either party to the contract.

70-06 Sanitary, health, and safety provisions. Contractor's worksite and facilities shall comply with applicable federal, state, and local requirements for health, safety and sanitary provisions.

70-07 Public convenience and safety. Contractor shall control their operations and those of their subcontractors and all suppliers, to assure the least inconvenience to the traveling public. Under all circumstances, safety shall be the most important consideration.

Contractor shall maintain the free and unobstructed movement of aircraft and vehicular traffic with respect to their own operations and those of their own subcontractors and all suppliers in accordance with Section 40, paragraph 40-05, *Maintenance of Traffic,* and shall limit such operations for the convenience and safety of the traveling public as specified in Section 80, paragraph 80-04, *Limitation of Operations*.

Contractor shall remove or control debris and rubbish resulting from its work operations at frequent intervals, and upon the order of the RPR. If the RPR determines the existence of Contractor debris in the work site represents a hazard to airport operations and Contractor is unable to respond in a prompt and reasonable manner, the RPR reserves the right to assign the task of debris removal to a third party and recover the resulting costs as a liquidated damage against Contractor.

70-08 Construction Safety and Phasing Plan (CSPP). Contractor shall complete the work in accordance with the approved Construction Safety and Phasing Plan (CSPP) developed in accordance with AC 150/5370-2, Operational Safety on Airports During Construction. The CSPP is included with Bid Package.

70-09 Use of explosives. The use of explosives is not permitted on this project.

70-10 Protection and restoration of property and landscape. Contractor shall be responsible for the preservation of all public and private property, and shall protect carefully from disturbance or damage all land monuments and property markers until Engineer/RPR has witnessed or otherwise referenced their location and shall not move them until directed.

Contractor shall be responsible for all damage or injury to property of any character, during the execution of the work, resulting from any act, omission, neglect, or misconduct in manner or method of executing the work, or at any time due to defective work or materials, and said responsibility shall not be released until the project has been completed and accepted.

When or where any direct or indirect damage or injury is done to public or private property by or on account of any act, omission, neglect, or misconduct in the execution of the work, or in consequence of the non-execution thereof by Contractor, Contractor shall restore, at their expense, such property to a condition similar or equal to that existing before such damage or injury was done, by repairing, or otherwise restoring as may be directed, or Contractor shall make good such damage or injury in an acceptable manner.

70-11 Responsibility for damage claims. Contractor shall indemnify and hold harmless Engineer/RPR and Owner and their officers, agents, and employees from all suits, actions, or claims, of any character, brought because of any injuries or damage received or sustained by any person, persons, or property on account of the operations of Contractor; or on account of or in consequence of any neglect in safeguarding the work; or through use of unacceptable materials in constructing the work; or because of any act or omission, neglect, or misconduct of said Contractor; or because of any claims or amounts recovered from any infringements of patent, trademark, or copyright; or from any claims or amounts arising or recovered under the "Workmen’s Compensation Act," or any other law, ordinance, order, or decree. Money due Contractor under and by virtue of their own contract considered necessary by Owner for such purpose may be retained for the use of Owner or, in case no money is due, their own surety may be held until such suits, actions, or claims for injuries or damages shall have been settled and suitable evidence to that effect furnished to Owner, except that money due Contractor will not be withheld when Contractor produces satisfactory evidence that he or she is adequately protected by public liability and property damage insurance.

70-12 Third party beneficiary clause. It is specifically agreed between the parties executing the contract that it is not intended by any of the provisions of any part of the contract to create for the public or any

member thereof, a third-party beneficiary or to authorize anyone not a party to the contract to maintain a suit for personal injuries or property damage pursuant to the terms or provisions of the contract.

70-13 Opening sections of the work to traffic. If it is necessary for Contractor to complete portions of the contract work for the beneficial occupancy of Owner prior to completion of the entire contract, such "phasing" of the work must be specified below and indicated on the approved Construction Safety and Phasing Plan (CSPP) and the project plans. When so specified, Contractor shall complete such portions of the work on or before the date specified or as otherwise specified.

Upon completion of any portion of work listed above, such portion shall be accepted by Owner in accordance with Section 50, paragraph 50-14, *Partial Acceptance*.

No portion of the work may be opened by Contractor until directed by Owner in writing. Should it become necessary to open a portion of the work to traffic on a temporary or intermittent basis, such openings shall be made when, in the opinion of the RPR, such portion of the work is in an acceptable condition to support the intended traffic. Temporary or intermittent openings are considered to be inherent in the work and shall not constitute either acceptance of the portion of the work so opened or a waiver of any provision of the contract. Any damage to the portion of the work so opened that is not attributable to traffic which is permitted by Owner shall be repaired by Contractor at their expense.

Contractor shall make their own estimate of the inherent difficulties involved in completing the work under the conditions herein described and shall not claim any added compensation by reason of delay or increased cost due to opening a portion of the contract work.

Contractor must conform to safety standards contained AC 150/5370-2 and the approved CSPP.

Contractor shall refer to the plans, specifications, and the approved CSPP to identify barricade requirements, temporary and/or permanent markings, airfield lighting, guidance signs and other safety requirements prior to opening up sections of work to traffic.

70-14 Contractor's responsibility for work. Until the RPR's final written acceptance of the entire completed work, excepting only those portions of the work accepted in accordance with Section 50, paragraph 50-14, *Partial Acceptance*, Contractor shall have the charge and care thereof and shall take every precaution against injury or damage to any part due to the action of the elements or from any other cause, whether arising from the execution or from the non-execution of the work. Contractor shall rebuild, repair, restore, and make good all injuries or damages to any portion of the work occasioned by any of the above causes before final acceptance and shall bear the expense thereof except damage to the work due to unforeseeable causes beyond the control of and without the fault or negligence of Contractor, including but not restricted to acts of God such as earthquake, tidal wave, tornado, hurricane or other cataclysmic phenomenon of nature, or acts of the public enemy or of government authorities.

If the work is suspended for any cause whatever, Contractor shall be responsible for the work and shall take such precautions necessary to prevent damage to the work. Contractor shall provide for normal drainage and shall erect necessary temporary structures, signs, or other facilities at their own expense. During such period of suspension of work, Contractor shall properly and continuously maintain in an acceptable growing condition all living material in newly established planting, seeding, and sodding furnished under the contract, and shall take adequate precautions to protect new tree growth and other important vegetative growth against injury.

70-15 Contractor's responsibility for utility service and facilities of others. As provided in paragraph 70-04, *Restoration of Surfaces Disturbed by Others*, Contractor shall cooperate with Owner of any public or private utility service, FAA or NOAA, or a utility service of another government agency that may be authorized by Owner to construct, reconstruct or maintain such utility services or facilities during the progress of the work. In addition, Contractor shall control their operations to prevent the unscheduled interruption of such utility services and facilities.

To the extent that such public or private utility services, FAA, or NOAA facilities, or utility services of another governmental agency are known to exist within the limits of the contract work, the approximate locations have been indicated on the plans and/or in the contract documents.

It is understood and agreed that Owner does not guarantee the accuracy or the completeness of the location information relating to existing utility services, facilities, or structures that may be shown on the plans or encountered in the work. Any inaccuracy or omission in such information shall not relieve Contractor of the responsibility to protect such existing features from damage or unscheduled interruption of service.

It is further understood and agreed that Contractor shall, upon execution of the contract, notify Owners of all utility services or other facilities of their plan of operations. Such notification shall be in writing addressed to "The Person to Contact" as provided in this paragraph and paragraph 70-04, *Restoration of Surfaces Disturbed By Others*. A copy of each notification shall be given to the RPR.

In addition to the general written notification provided, it shall be the responsibility of Contractor to keep such individual Owners advised of changes in their plan of operations that would affect such Owners.

Prior to beginning the work in the general vicinity of an existing utility service or facility, Contractor shall again notify each such Owner of their plan of operation. If, in Contractor's opinion, Owner's assistance is needed to locate the utility service or facility or the presence of a representative of Owner is desirable to observe the work, such advice should be included in the notification. Such notification shall be given by the most expeditious means to reach the utility owner's "Person to Contact" no later than two normal business days prior to Contractor's commencement of operations in such general vicinity. Contractor shall furnish a written summary of the notification to the RPR.

Contractor's failure to give the two days' notice shall be cause for Owner to suspend Contractor's operations in the general vicinity of a utility service or facility.

Where the outside limits of an underground utility service have been located and staked on the ground, Contractor shall be required to use hand excavation methods within 3 feet (1 m) of such outside limits at such points as may be required to ensure protection from damage due to Contractor's operations.

Should Contractor damage or interrupt the operation of a utility service or facility by accident or otherwise, Contractor shall immediately notify the proper authority and the RPR and shall take all reasonable measures to prevent further damage or interruption of service. Contractor, in such events, shall cooperate with the utility service or facility owner and the RPR continuously until such damage has been repaired and service restored to the satisfaction of the utility or facility owner.

Contractor shall bear all costs of damage and restoration of service to any utility service or facility due to their operations whether due to negligence or accident. Owner reserves the right to deduct such costs from any monies due or which may become due Contractor, or their own surety.

70-16 Furnishing rights-of-way. Owner will be responsible for furnishing all rights-of-way upon which the work is to be constructed in advance of Contractor's operations.

70-17 Personal liability of public officials. In carrying out any of the contract provisions or in exercising any power or authority granted by this contract, there shall be no liability upon Engineer, RPR, their authorized representatives, or any officials of Owner either personally or as an official of Owner. It is understood that in such matters they act solely as agents and representatives of Owner.

70-18 No waiver of legal rights. Upon completion of the work, Owner will expeditiously make final inspection and notify Contractor of final acceptance. Such final acceptance, however, shall not preclude or stop Owner from correcting any measurement, estimate, or certificate made before or after completion of the work, nor shall Owner be precluded or stopped from recovering from Contractor or their surety, or both, such overpayment as may be sustained, or by failure on the part of Contractor to fulfill their obligations under the contract. A waiver on the part of Owner of any breach of any part of the contract shall not be held to be a waiver of any other or subsequent breach.

Contractor, without prejudice to the terms of the contract, shall be liable to Owner for latent defects, fraud, or such gross mistakes as may amount to fraud, or as regards Owner's rights under any warranty or guaranty.

70-19 Environmental protection. Contractor shall comply with all federal, state, and local laws and regulations controlling pollution of the environment. Contractor shall take necessary precautions to prevent pollution of streams, lakes, ponds, and reservoirs with fuels, oils, asphalts, chemicals, or other harmful materials and to prevent pollution of the atmosphere from particulate and gaseous matter.

70-20 Archaeological and historical findings. Unless otherwise specified in this subsection, Contractor is advised that the site of the work is not within any property, district, or site, and does not contain any building, structure, or object listed in the current National Register of Historic Places published by the United States Department of Interior.

Should Contractor encounter, during their operations, any building, part of a building, structure, or object that is incongruous with its surroundings, Contractor shall immediately cease operations in that location and notify the RPR. The RPR will immediately investigate Contractor's finding and Owner will direct Contractor to either resume operations or to suspend operations as directed.

Should Owner order suspension of Contractor's operations in order to protect an archaeological or historical finding, or order Contractor to perform extra work, such shall be covered by an appropriate contract change order or supplemental agreement as provided in Section 40, paragraph 40-04, *Extra Work,* and Section 90, paragraph 90-05, *Payment for Extra Work*. If appropriate, the contract change order or supplemental agreement shall include an extension of contract time in accordance with Section 80, paragraph 80-07, *Determination and Extension of Contract Time*.

70-21 Insurance Requirements. See Special Provisions SP-17.

END OF SECTION 70

Page Intentionally Blank

Section 80 Execution and Progress

80-01 Subletting of contract. Owner will not recognize any subcontractor on the work. Contractor shall at all times when work is in progress be represented either in person, by a qualified superintendent, or by other designated, qualified representative who is duly authorized to receive and execute orders of the Resident Project Representative (RPR).

Contractor shall perform, with his organization, an amount of work equal to at least **25** percent of the total contract cost.

Should Contractor elect to assign their contract, said assignment shall be concurred in by the surety, shall be presented for the consideration and approval of Owner, and shall be consummated only on the written approval of Owner.

Contractor shall provide copies of all subcontracts to the RPR fourteen (14) days prior to being utilized on the project. As a minimum, the information shall include the following:

- Subcontractor's legal company name.
- Subcontractor's legal company address, including County name.
- Principal contact person's name, telephone and fax number.
- Complete narrative description, and dollar value of the work to be performed by the subcontractor.
- Copies of required insurance certificates in accordance with the specifications.
- Minority/ non-minority status.

80-02 Notice to proceed (NTP). Owners notice to proceed will state the date on which contract time commences. Contractor is expected to commence project operations within **ten (10)** days of the NTP date. Contractor shall notify the RPR at least 24 hours in advance of the time contract operations begins. Contractor shall not commence any actual operations prior to the date on which the notice to proceed is issued by Owner.

80-03 Execution and progress. Unless otherwise specified, Contractor shall submit their coordinated construction schedule showing all work activities for the RPR’s review and acceptance at least 10 days prior to the start of work. Contractor’s progress schedule, once accepted by the RPR, will represent Contractor's baseline plan to accomplish the project in accordance with the terms and conditions of the Contract. The RPR will compare actual Contractor progress against the baseline schedule to determine that status of Contractor's performance. Contractor shall provide sufficient materials, equipment, and labor to guarantee the completion of the project in accordance with the plans and specifications within the time set forth in the proposal.

If Contractor falls significantly behind the submitted schedule, Contractor shall, upon the RPR’s request, submit a revised schedule for completion of the work within the contract time and modify their operations to provide such additional materials, equipment, and labor necessary to meet the revised schedule. Should the execution of the work be discontinued for any reason, Contractor shall notify the RPR at least 24 hours in advance of resuming operations.

Contractor shall not commence any actual construction prior to the date on which the NTP is issued by Owner.

Contractor shall maintain the work schedule and provide an update and analysis of the progress schedule on a twice-monthly basis, or as otherwise specified in the contract. Submission of the work schedule shall not relieve Contractor of overall responsibility for scheduling, sequencing, and coordinating all work to comply with the requirements of the contract.

80-04 Limitation of operations. Contractor shall control their operations and the operations of their subcontractors and all suppliers to provide for the free and unobstructed movement of aircraft in the air operations areas (AOA) of the airport.

When the work requires Contractor to conduct their operations within an AOA of the airport, the work shall be coordinated with airport operations (through the RPR) at least 48 hours prior to commencement of such work. Contractor shall not close an AOA until so authorized by the RPR and until the necessary temporary marking, signage and associated lighting is in place as provided in Section 70, paragraph 70-08, *Construction Safety and Phasing Plan (CSPP)*.

When the contract work requires Contractor to work within an AOA of the airport on an intermittent basis (intermittent opening and closing of the AOA), Contractor shall maintain constant communications as specified; immediately obey all instructions to vacate the AOA; and immediately obey all instructions to resume work in such AOA. Failure to maintain the specified communications or to obey instructions shall be cause for suspension of Contractor's operations in the AOA until satisfactory conditions are provided. The areas of the AOA identified in the Construction Safety Phasing Plan (CSPP) and as listed below, cannot be closed to operating aircraft to permit Contractor's operations on a continuous basis and will therefore be closed to aircraft operations intermittently as follows: None.

Contractor shall be required to conform to safety standards contained in AC 150/5370-2, Operational Safety on Airports During Construction and the approved CSPP.

80-04.1 Operational safety on airport during construction. All Contractors' operations shall be conducted in accordance with the approved project Construction Safety and Phasing Plan (CSPP) and the Safety Plan Compliance Document (SPCD) and the provisions set forth within the current version of AC 150/5370-2, Operational Safety on Airports During Construction. The CSPP included within the contract documents conveys minimum requirements for operational safety on the airport during construction activities. Contractor shall prepare and submit a SPCD that details how it proposes to comply with the requirements presented within the CSPP.

Contractor shall implement all necessary safety plan measures prior to commencement of any work activity. Contractor shall conduct routine checks to assure compliance with the safety plan measures.

Contractor is responsible to Owner for the conduct of all subcontractors it employs on the project. Contractor shall assure that all subcontractors are made aware of the requirements of the CSPP and SPCD and that they implement and maintain all necessary measures.

No deviation or modifications may be made to the approved CSPP and SPCD unless approved in writing by Owner. The necessary coordination actions to review Contractor proposed modifications to an approved CSPP or approved SPCD can require a significant amount of time.

80-05 Character of workers, methods, and equipment. Contractor shall, at all times, employ sufficient labor and equipment for prosecuting the work to full completion in the manner and time required by the contract, plans, and specifications.

All workers shall have sufficient skill and experience to perform properly the work assigned to them. Workers engaged in special work or skilled work shall have sufficient experience in such work and in the operation of the equipment required to perform the work satisfactorily.

Any person employed by Contractor or by any subcontractor who violates any operational regulations or operational safety requirements and, in the opinion of the RPR, does not perform his work in a proper and skillful manner or is intemperate or disorderly shall, at the written request of the RPR, be removed immediately by Contractor or subcontractor employing such person, and shall not be employed again in any portion of the work without approval of the RPR.

Should Contractor fail to remove such person or persons, or fail to furnish suitable and sufficient personnel for the proper execution of the work, the RPR may suspend the work by written notice until compliance with such orders.

All equipment that is proposed to be used on the work shall be of sufficient size and in such mechanical condition as to meet requirements of the work and to produce a satisfactory quality of work. Equipment used on any portion of the work shall not cause injury to previously completed work, adjacent property, or existing airport facilities due to its use.

When the methods and equipment to be used by Contractor in accomplishing the work are not prescribed in the contract, Contractor is free to use any methods or equipment that will accomplish the work in conformity with the requirements of the contract, plans, and specifications.

When the contract specifies the use of certain methods and equipment, such methods and equipment shall be used unless otherwise authorized by the RPR. If Contractor desires to use a method or type of equipment other than specified in the contract, Contractor may request authority from the RPR to do so. The request shall be in writing and shall include a full description of the methods and equipment proposed and of the reasons for desiring to make the change. If approval is given, it will be on the condition that Contractor will be fully responsible for producing work in conformity with contract requirements. If, after trial use of the substituted methods or equipment, the RPR determines that the work produced does not meet contract requirements, Contractor shall discontinue the use of the substitute method or equipment and shall complete the remaining work with the specified methods and equipment. Contractor shall remove any deficient work and replace it with work of specified quality, or take such other corrective action as the RPR may direct. No change will be made in basis of payment for the contract items involved nor in contract time as a result of authorizing a change in methods or equipment under this paragraph.

80-06 Temporary suspension of the work. Owner shall have the authority to suspend the work wholly, or in part, for such period or periods Owner may deem necessary, due to unsuitable weather, or other conditions considered unfavorable for the execution of the work, or for such time necessary due to the failure on the part of Contractor to carry out orders given or perform any or all provisions of the contract.

In the event that Contractor is ordered by Owner, in writing, to suspend work for some unforeseen cause not otherwise provided for in the contract and over which Contractor has no control, Contractor may be reimbursed for actual money expended on the work during the period of shutdown. No allowance will be made for anticipated profits. The period of shutdown shall be computed from the effective date of the written order to suspend work to the effective date of the written order to resume the work. Claims for such compensation shall be filed with the RPR within the time period stated in the RPR's order to resume work. Contractor shall submit with their own claim information substantiating the amount shown on the claim. The RPR will forward Contractor's claim to Owner for consideration in accordance with local laws or ordinances. No provision of this article shall be construed as entitling Contractor to compensation for delays due to inclement weather or for any other delay provided for in the contract, plans, or specifications.

If it becomes necessary to suspend work for an indefinite period, Contractor shall store all materials in such manner that they will not become an obstruction nor become damaged in any way. Contractor shall take every precaution to prevent damage or deterioration of the work performed and provide for normal drainage of the work. Contractor shall erect temporary structures where necessary to provide for traffic on, to, or from the airport.

80-07 Determination and extension of contract time. The number of calendar days shall be stated in the proposal and contract and shall be known as the Contract Time.

If the contract time requires extension for reasons beyond Contractor's control, it shall be adjusted as follows:

80-07.1

Contract time based on calendar days. Contract Time based on calendar days shall consist of the number of calendar days stated in the contract counting from the effective date of the Notice to Proceed and including all Saturdays, Sundays, holidays, and non-work days. All calendar days elapsing between the effective dates of Owner's orders to suspend and resume all work, due to causes not the fault of Contractor, shall be excluded.

At the time of final payment, the contract time shall be increased in the same proportion as the cost of the actually completed quantities bears to the cost of the originally estimated quantities in the proposal. Such increase in the contract time shall not consider either cost of work or the extension of contract time that has been covered by a change order or supplemental agreement. Charges against the contract time will cease as of the date of final acceptance.

80-08 Failure to complete on time. For each calendar day or working day, as specified in the contract, that any work remains uncompleted after the contract time (including all extensions and adjustments as provided in paragraph 80-07, *Determination and Extension of Contract Time*) the sum specified in the contract and proposal as liquidated damages (LD) will be deducted from any money due or to become due Contractor or their own surety. Such deducted sums shall not be deducted as a penalty but shall be considered as liquidation of a reasonable portion of damages including but not limited to additional engineering services that will be incurred by Owner should Contractor fail to complete the work in the time provided in their contract.

Schedule	Liquidated Damages Cost	Allowed Construction Time
Base Bid	$1,000	90

80-09 Default and termination of contract**. Contractor shall be considered in default of their contract and such default will be considered as cause for Owner to terminate the contract for any of the following reasons, if Contractor:**

a. Fails to begin the work under the contract within the time specified in the Notice to Proceed, or

b. Fails to perform the work or fails to provide sufficient workers, equipment and/or materials to assure completion of work in accordance with the terms of the contract, or

c. Performs the work unsuitably or neglects or refuses to remove materials or to perform anew such work as may be rejected as unacceptable and unsuitable, or

d. Discontinues the execution of the work, or

e. Fails to resume work which has been discontinued within a reasonable time after notice to do so, or

f. Becomes insolvent or is declared bankrupt, or commits any act of bankruptcy or insolvency, or

g. Allows any final judgment to stand against Contractor unsatisfied for a period of 10 days, or

h. Makes an assignment for the benefit of creditors, or

i. For any other cause whatsoever, fails to carry on the work in an acceptable manner.

Should Owner consider Contractor in default of the contract for any reason above, Owner shall immediately give written notice to Contractor and Contractor's surety as to the reasons for considering Contractor in default and Owner's intentions to terminate the contract.

If Contractor or surety, within a period of 10 days after such notice, does not proceed in accordance therewith, then Owner will, upon written notification from the RPR of the facts of such delay, neglect, or default and Contractor's failure to comply with such notice, have full power and authority without violating the contract, to take the execution of the work out of the hands of Contractor. Owner may appropriate or use any or all materials and equipment that have been mobilized for use in the work and are acceptable and may enter into an agreement for the completion of said contract according to the terms and provisions thereof, or use such other methods as in the opinion of the RPR will be required for the completion of said contract in an acceptable manner.

All costs and charges incurred by Owner, together with the cost of completing the work under contract, will be deducted from any monies due or which may become due Contractor. If such expense exceeds the sum which would have been payable under the contract, then Contractor and the surety shall be liable and shall pay to Owner the amount of such excess.

80-10 Termination for national emergencies. Owner shall terminate the contract or portion thereof by written notice when Contractor is prevented from proceeding with the construction contract as a direct result of an Executive Order of the President with respect to the execution of war or in the interest of national defense.

When the contract, or any portion thereof, is terminated before completion of all items of work in the contract, payment will be made for the actual number of units or items of work completed at the contract price or as mutually agreed for items of work partially completed or not started. No claims or loss of anticipated profits shall be considered.

Reimbursement for organization of the work, and other overhead expenses, (when not otherwise included in the contract) and moving equipment and materials to and from the job will be considered, the intent being that an equitable settlement will be made with Contractor.

Acceptable materials, obtained or ordered by Contractor for the work and that are not incorporated in the work shall, at the option of Contractor, be purchased from Contractor at actual cost as shown by receipted bills and actual cost records at such points of delivery as may be designated by the RPR.

Termination of the contract or a portion thereof shall neither relieve Contractor of their responsibilities for the completed work nor shall it relieve their surety of its obligation for and concerning any just claim arising out of the work performed.

80-11 Work area, storage area and sequence of operations. Contractor shall obtain approval from the RPR prior to beginning any work in all areas of the airport. No operating runway, taxiway, or air operations area (AOA) shall be crossed, entered, or obstructed while it is operational. Contractor shall plan and coordinate work in accordance with the approved CSPP and SPCD.

END OF SECTION 80

Section 90 Measurement and Payment

90-01 Measurement of quantities. All work completed under the contract will be measured by the RPR, or their authorized representatives, using United States Customary Units of Measurement.

The method of measurement and computations to be used in determination of quantities of material furnished and of work performed under the contract will be those methods generally recognized as conforming to good engineering practice.

Unless otherwise specified, longitudinal measurements for area computations will be made horizontally, and no deductions will be made for individual fixtures (or leave-outs) having an area of 9 square feet or less. Unless otherwise specified, transverse measurements for area computations will be the neat dimensions shown on the plans or ordered in writing by the RPR.

Unless otherwise specified, all contract items which are measured by the linear foot such as electrical ducts, conduits, pipe culverts, underdrains, and similar items shall be measured parallel to the base or foundation upon which such items are placed.

The term "lump sum" when used as an item of payment will mean complete payment for the work described in the contract. When a complete structure or structural unit (in effect, "lump sum" work) is specified as the unit of measurement, the unit will be construed to include all necessary fittings and accessories.

When requested by Contractor and approved by the RPR in writing, material specified to be measured by the cubic yard may be weighed, and such weights will be converted to cubic yards for payment purposes. Factors for conversion from weight measurement to volume measurement will be determined by the RPR and shall be agreed to by Contractor before such method of measurement of pay quantities is used.

Measurement and Payment Terms

Term	Description
Excavation and Embankment Volume	In computing volumes of excavation, the average end area method will be used unless otherwise specified.
Measurement and Proportion by Weight	The term "ton" will mean the short ton consisting of 2,000 pounds avoirdupois. All materials that are measured or proportioned by weights shall be weighed on accurate, independently certified scales by competent, qualified personnel at locations designated by the RPR. If material is shipped by rail, the car weight may be accepted provided that only the actual weight of material is paid for. However, car weights will not be acceptable for material to be passed through mixing plants. Trucks used to haul material being paid for by weight shall be weighed empty daily at such times as the RPR directs, and each truck shall bear a plainly legible identification mark.
Measurement by Volume	Materials to be measured by volume in the hauling vehicle shall be hauled in approved vehicles and measured therein at the point of delivery. Vehicles for this purpose may be of any size or type acceptable for the materials hauled, provided that the body is of such shape that the actual contents may be readily and accurately determined. All vehicles shall be loaded to at least their water level capacity, and all loads shall be leveled when the vehicles arrive at the point of delivery.

Term	Description
Asphalt Material	Asphalt materials will be measured by the gallon or ton. When measured by volume, such volumes will be measured at 60°F or will be corrected to the volume at 60°F using ASTM D1250 for asphalts. Net certified scale weights or weights based on certified volumes in the case of rail shipments will be used as a basis of measurement, subject to correction when asphalt material has been lost from the car or the distributor, wasted, or otherwise not incorporated in the work. When asphalt materials are shipped by truck or transport, net certified weights by volume, subject to correction for loss or foaming, will be used for computing quantities.
Cement	Cement will be measured by the ton or hundredweight.
Structure	Structures will be measured according to neat lines shown on the plans or as altered to fit field conditions.
Timber	Timber will be measured by the thousand feet board measure (MFBM) actually incorporated in the structure. Measurement will be based on nominal widths and thicknesses and the extreme length of each piece.
Plates and Sheets	The thickness of plates and galvanized sheet used in the manufacture of corrugated metal pipe, metal plate pipe culverts and arches, and metal cribbing will be specified and measured in decimal fraction of inch.
Miscellaneous Items	When standard manufactured items are specified such as fence, wire, plates, rolled shapes, pipe conduit, etc., and these items are identified by gauge, unit weight, section dimensions, etc., such identification will be considered to be nominal weights or dimensions. Unless more stringently controlled by tolerances in cited specifications, manufacturing tolerances established by the industries involved will be accepted.
Scales	Scales must be tested for accuracy and serviced before use. Scales for weighing materials which are required to be proportioned or measured and paid for by weight shall be furnished, erected, and maintained by Contractor, or be certified permanently installed commercial scales. Platform scales shall be installed and maintained with the platform level and rigid bulkheads at each end. Scales shall be accurate within 0.5% of the correct weight throughout the range of use. Contractor shall have the scales checked under the observation of the RPR before beginning work and at such other times as requested. The intervals shall be uniform in spacing throughout the graduated or marked length of the beam or dial and shall not exceed 0.1% of the nominal rated capacity of the scale, but not less than 1 pound. The use of spring balances will not be permitted. In the event inspection reveals the scales have been "overweighing" (indicating more than correct weight) they will be immediately adjusted. All materials received subsequent to the last previous correct weighting-accuracy test will be reduced by the percentage of error in excess of 0.5%. In the event inspection reveals the scales have been under-weighing (indicating less than correct weight), they shall be immediately adjusted. No additional payment to Contractor will be allowed for materials previously weighed and recorded. Beams, dials, platforms, and other scale equipment shall be so arranged that the operator and the RPR can safely and conveniently view them. Scale installations shall have available ten standard 50-pound weights for testing the weighing equipment or suitable weights and devices for other approved equipment.

Term	Description
	All costs in connection with furnishing, installing, certifying, testing, and maintaining scales; for furnishing check weights and scale house; and for all other items specified in this subsection, for the weighing of materials for proportioning or payment, shall be included in the unit contract prices for the various items of the project.
Rental Equipment	Rental of equipment will be measured by time in hours of actual working time and necessary traveling time of the equipment within the limits of the work. Special equipment ordered in connection with extra work will be measured as agreed in the change order or supplemental agreement authorizing such work as provided in paragraph 90-05 *Payment for Extra Work*.
Pay Quantities	When the estimated quantities for a specific portion of the work are designated as the pay quantities in the contract, they shall be the final quantities for which payment for such specific portion of the work will be made, unless the dimensions of said portions of the work shown on the plans are revised by the RPR. If revised dimensions result in an increase or decrease in the quantities of such work, the final quantities for payment will be revised in the amount represented by the authorized changes in the dimensions.

90-02 Scope of payment. Contractor shall receive and accept compensation provided for in the contract as full payment for furnishing all materials, for performing all work under the contract in a complete and acceptable manner, and for all risk, loss, damage, or expense of whatever character arising out of the nature of the work or the execution thereof, subject to the provisions of Section 70, paragraph 70-18, *No Waiver of Legal Rights*.

When the "basis of payment" subsection of a technical specification requires that the contract price (price bid) include compensation for certain work or material essential to the item, this same work or material will not also be measured for payment under any other contract item which may appear elsewhere in the contract, plans, or specifications.

90-03 Compensation for altered quantities. When the accepted quantities of work vary from the quantities in the proposal, Contractor shall accept as payment in full, so far as contract items are concerned, payment at the original contract price for the accepted quantities of work actually completed and accepted. No allowance, except as provided for in Section 40, paragraph 40-02, *Alteration of Work and Quantities,* will be made for any increased expense, loss of expected reimbursement, or loss of anticipated profits suffered or claimed by Contractor which results directly from such alterations or indirectly from their own unbalanced allocation of overhead and profit among the contract items, or from any other cause.

90-04 Payment for omitted items. As specified in Section 40, paragraph 40-03, *Omitted Items,* the RPR shall have the right to omit from the work (order nonperformance) any contract item, except major contract items, in the best interest of Owner.

Should the RPR omit or order nonperformance of a contract item or portion of such item from the work, Contractor shall accept payment in full at the contract prices for any work actually completed and acceptable prior to the RPR’s order to omit or non-perform such contract item.

Acceptable materials ordered by Contractor or delivered on the work prior to the date of the RPR’s order will be paid for at the actual cost to Contractor and shall thereupon become the property of Owner.

In addition to the reimbursement hereinbefore provided, Contractor shall be reimbursed for all actual costs incurred for the purpose of performing the omitted contract item prior to the date of the RPR’s order. Such additional costs incurred by Contractor must be directly related to the deleted contract item and shall be supported by certified statements by Contractor as to the nature the amount of such costs.

90-05 Payment for extra work. Extra work, performed in accordance with Section 40, paragraph 40-04, *Extra Work*, will be paid for at the contract prices or agreed prices specified in the change order or supplemental agreement authorizing the extra work.

90-06 Partial payments. Partial payments will be made to Contractor at least once each month as the work progresses. Said payments will be based upon estimates, prepared by the RPR, of the value of the work performed and materials complete and in place, in accordance with the contract, plans, and specifications. Such partial payments may also include the delivered actual cost of those materials stockpiled and stored in accordance with paragraph 90-07, *Payment for Materials on Hand*. No partial payment will be made when the amount due to Contractor since the last estimate amounts to less than five hundred dollars.

Owner may hold retainage from prime Contractors and provide for prompt and regular incremental acceptances of portions of the prime contract, pay retainage to prime Contractors based on these acceptances, and require a contract clause obligating the prime Contractor to pay all retainage owed to the subcontractor for satisfactory completion of the accepted work within 30 days after Owner's payment to the prime Contractor. If Option 3 is selected, the percent withheld may range from 0% to 10% but in no case may it exceed 10%. When establishing a suitable retainage value that protects Owner's interests, give consideration that the performance and payment bonds also provide similar protection of Owner interests. Owner may elect to incrementally release retainage if owner is satisfied its interest with completion of the project are protected in an adequate manner. If Option 3 is selected, insert the following clause and specify a suitable value where indicated:

a. From the total of the amount determined to be payable on a partial payment, five (5%) percent of such total amount will be deducted and retained by Owner for protection of Owner's interests. Unless otherwise instructed by Owner, the amount retained by Owner will be in effect until the final payment is made except as follows:

(1) Contractor may request release of retainage on work that has been partially accepted by Owner in accordance with Section 50-03. Contractor must provide a certified invoice to the RPR that supports the value of retainage held by Owner for partially accepted work.

(2) In lieu of retainage, Contractor may exercise at its option the establishment of an escrow account per paragraph 90-08.

b. Contractor is required to pay all subcontractors for satisfactory performance of their contracts no later than 30 days after Contractor has received a partial payment. Contractor must provide Owner evidence of prompt and full payment of retainage held by the prime Contractor to the subcontractor within 30 days after the subcontractor's work is satisfactorily completed. A subcontractor's work is satisfactorily completed when all the tasks called for in the subcontract have been accomplished and documented as required by Owner. When Owner has made an incremental acceptance of a portion of a prime contract, the work of a subcontractor covered by that acceptance is deemed to be satisfactorily completed.

c. When at least 95% of the work has been completed to the satisfaction of the RPR, the RPR shall, at Owner's discretion and with the consent of the surety, prepare estimates of both the contract value and the cost of the remaining work to be done. Owner may retain an amount not less than twice the contract value or estimated cost, whichever is greater, of the work remaining to be done. The remainder, less all previous payments and deductions, will then be certified for payment to Contractor.

It is understood and agreed that Contractor shall not be entitled to demand or receive partial payment based on quantities of work in excess of those provided in the proposal or covered by approved change orders or

supplemental agreements, except when such excess quantities have been determined by the RPR to be a part of the final quantity for the item of work in question.

No partial payment shall bind Owner to the acceptance of any materials or work in place as to quality or quantity. All partial payments are subject to correction at the time of final payment as provided in paragraph 90-09, *Acceptance and Final Payment*.

Contractor shall deliver to Owner a complete release of all claims for labor and material arising out of this contract before the final payment is made. If any subcontractor or supplier fails to furnish such a release in full, Contractor may furnish a bond or other collateral satisfactory to Owner to indemnify Owner against any potential lien or other such claim. The bond or collateral shall include all costs, expenses, and attorney fees Owner may be compelled to pay in discharging any such lien or claim.

90-07 Payment for materials on hand. Partial payments may be made to the extent of the delivered cost of materials to be incorporated in the work, provided that such materials meet the requirements of the contract, plans, and specifications and are delivered to acceptable sites on the airport property or at other sites in the vicinity that are acceptable to Owner. Such delivered costs of stored or stockpiled materials may be included in the next partial payment after the following conditions are met:

a. The material has been stored or stockpiled in a manner acceptable to the RPR at or on an approved site.

b. Contractor has furnished the RPR with acceptable evidence of the quantity and quality of such stored or stockpiled materials.

c. Contractor has furnished the RPR with satisfactory evidence that the material and transportation costs have been paid.

d. Contractor has furnished Owner legal title (free of liens or encumbrances of any kind) to the material stored or stockpiled.

e. Contractor has furnished Owner evidence that the material stored or stockpiled is insured against loss by damage to or disappearance of such materials at any time prior to use in the work.

It is understood and agreed that the transfer of title and Owner's payment for such stored or stockpiled materials shall in no way relieve Contractor of their responsibility for furnishing and placing such materials in accordance with the requirements of the contract, plans, and specifications.

In no case will the amount of partial payments for materials on hand exceed the contract price for such materials or the contract price for the contract item in which the material is intended to be used.

No partial payment will be made for stored or stockpiled living or perishable plant materials.

Contractor shall bear all costs associated with the partial payment of stored or stockpiled materials in accordance with the provisions of this paragraph.

90-08 Payment of withheld funds. At Contractor's option, if an Owner withholds retainage in accordance with the methods described in paragraph 90-06 *Partial Payments*, Contractor may request that Owner deposit the retainage into an escrow account. Owner's deposit of retainage into an escrow account is subject to the following conditions:

a. Contractor shall bear all expenses of establishing and maintaining an escrow account and escrow agreement acceptable to Owner.

b. Contractor shall deposit to and maintain in such escrow only those securities or bank certificates of deposit as are acceptable to Owner and having a value not less than the retainage that would otherwise be withheld from partial payment.

c. Contractor shall enter into an escrow agreement satisfactory to Owner.

d. Contractor shall obtain the written consent of the surety to such agreement.

90-09 Acceptance and final payment. When the contract work has been accepted in accordance with the requirements of Section 50, paragraph 50-15, *Final Acceptance*, the RPR will prepare the final estimate of the items of work actually performed. Contractor shall approve the RPR's final estimate or advise the RPR of Contractor's objections to the final estimate which are based on disputes in measurements or computations of the final quantities to be paid under the contract as amended by change order or supplemental agreement. Contractor and the RPR shall resolve all disputes (if any) in the measurement and computation of final quantities to be paid within 30 calendar days of Contractor's receipt of the RPR's final estimate. If, after such 30-day period, a dispute still exists, Contractor may approve the RPR's estimate under protest of the quantities in dispute, and such disputed quantities shall be considered by Owner as a claim in accordance with Section 50, paragraph 50-16, *Claims for Adjustment and Disputes*.

After Contractor has approved, or approved under protest, the RPR's final estimate, and after the RPR's receipt of the project closeout documentation required in paragraph 90-11, *Contractor Final Project Documentation*, final payment will be processed based on the entire sum, or the undisputed sum in case of approval under protest, determined to be due Contractor less all previous payments and all amounts to be deducted under the provisions of the contract. All prior partial estimates and payments shall be subject to correction in the final estimate and payment.

If Contractor has filed a claim for additional compensation under the provisions of Section 50, paragraph 50-16, *Claims for Adjustments and Disputes,* or under the provisions of this paragraph, such claims will be considered by Owner in accordance with local laws or ordinances. Upon final adjudication of such claims, any additional payment determined to be due Contractor will be paid pursuant to a supplemental final estimate.

90-10 Construction warranty.

a. In addition to any other warranties in this contract, Contractor warrants that work performed under this contract conforms to the contract requirements and is free of any defect in equipment, material, workmanship, or design furnished, or performed by Contractor or any subcontractor or supplier at any tier.

b. This warranty shall continue for a period of one year from the date of final acceptance of the work, except as noted. If Owner takes possession of any part of the work before final acceptance, this warranty shall continue for a period of one year from the date Owner takes possession.

c. Contractor shall remedy at Contractor's expense any failure to conform, or any defect. In addition, Contractor shall remedy at Contractor's expense any damage to Owner real or personal property, when that damage is the result of Contractor's failure to conform to contract requirements; or any defect of equipment, material, workmanship, or design furnished by Contractor.

d. Contractor shall restore any work damaged in fulfilling the terms and conditions of this clause. Contractor's warranty with respect to work repaired or replaced will run for one year from the date of repair or replacement.

e. Owner will notify Contractor, in writing, within seven days after the discovery of any failure, defect, or damage.

f. If Contractor fails to remedy any failure, defect, or damage within 14 days after receipt of notice, Owner shall have the right to replace, repair, or otherwise remedy the failure, defect, or damage at Contractor's expense.

g. With respect to all warranties, express or implied, from subcontractors, manufacturers, or suppliers for work performed and materials furnished under this contract, Contractor shall: (1) obtain all warranties that would be given in normal commercial practice; (2) require all warranties to be executed, in writing, for the benefit of Owner, as directed by Owner, and (3) enforce all warranties for the benefit of Owner.

h. This warranty shall not limit Owner's rights with respect to latent defects, gross mistakes, or fraud.

90-11 Contractor Final Project Documentation. Approval of final payment to Contractor is contingent upon completion and submittal of the items listed below. The final payment will not be approved until the RPR approves Contractor's final submittal. Contractor shall:

a. Provide two copies of all manufacturers warranties specified for materials, equipment, and installations.

b. Provide weekly payroll records (not previously received) from the general Contractor and all subcontractors.

c. Complete final cleanup in accordance with Section 40, paragraph 40-08, *Final Cleanup*.

d. Complete all punch list items identified during the Final Inspection.

e. Provide complete release of all claims for labor and material arising out of the Contract.

f. Provide a certified statement signed by the subcontractors, indicating actual amounts paid to the Disadvantaged Business Enterprise (DBE) subcontractors and/or suppliers associated with the project.

g. When applicable per state requirements, return copies of sales tax completion forms.

h. Manufacturer's certifications for all items incorporated in the work.

i. All required record drawings, as-built drawings or as-constructed drawings.

j. Project Operation and Maintenance (O&M) Manual(s).

k. Security for Construction Warranty.

l. Equipment commissioning documentation submitted, if required.

END OF SECTION 90

Item C-100 Contractor Quality Control Program (CQCP)

100-1 General. Quality is more than test results. Quality is the combination of proper materials, testing, workmanship, equipment, inspection, and documentation of the Project. Establishing and maintaining a culture of quality is key to achieving a quality project. Contractor shall establish, provide, and maintain an effective Contractor Quality Control Program (CQCP) that details the methods and procedures that will be taken to assure that all materials and completed construction required by this contract conform to contract plans, technical specifications, and other requirements, whether manufactured by Contractor, or procured from subcontractors or vendors. Although guidelines are established and certain minimum requirements are specified here and elsewhere in the contract technical specifications, Contractor shall assume full responsibility for accomplishing the stated purpose.

Contractor shall establish a CQCP that will:

a. Provide qualified personnel to develop and implement the CQCP.

b. Provide for the production of acceptable quality materials.

c. Provide sufficient information to assure that the specification requirements can be met.

d. Document the CQCP process.

Contractor shall not begin any construction or production of materials to be incorporated into the completed work until the CQCP has been reviewed and approved by the Resident Project Representative (RPR). No partial payment will be made for materials subject to specific quality control (QC) requirements until the CQCP has been reviewed and approved.

The QC requirements contained in this section and elsewhere in the contract technical specifications are in addition to and separate from the quality assurance (QA) testing requirements. QA testing requirements are the responsibility of the RPR or Contractor as specified in the specifications.

A Quality Control (QC)/Quality Assurance (QA) workshop with Engineer, Resident Project Representative (RPR), Contractor, subcontractors, testing laboratories, and Owner's representative must be held prior to start of construction. The QC/QA workshop will be facilitated by Contractor. Contractor shall coordinate with the Airport and the RPR on time and location of the QC/QA workshop. Items to be addressed, at a minimum, will include:

a. Review of the CQCP including submittals, QC Testing, Action & Suspension Limits for Production, Corrective Action Plans, Distribution of QC reports, and Control Charts.

b. Discussion of the QA program.

c. Discussion of the QC and QA Organization and authority including coordination and information exchange between QC and QA.

d. Establish regular meetings to discuss control of materials, methods and testing.

e. Establishment of the overall QC culture.

100-2 Description of program.

a. General description. Contractor shall establish a CQCP to perform QC inspection and testing of all items of work required by the technical specifications, including those performed by subcontractors. The CQCP shall ensure conformance to applicable specifications and plans with respect to materials, off-site

fabrication, workmanship, construction, finish, and functional performance. The CQCP shall be effective for control of all construction work performed under this Contract and shall specifically include surveillance and tests required by the technical specifications, in addition to other requirements of this section and any other activities deemed necessary by Contractor to establish an effective level of QC.

b. Contractor Quality Control Program (CQCP). Contractor shall describe the CQCP in a written document that shall be reviewed and approved by the RPR prior to the start of any production, construction, or off-site fabrication. The written CQCP shall be submitted to the RPR for review and approval at least 10 calendar days before the CQCP Workshop. Contractor's CQCP and QC testing laboratory must be approved in writing by the RPR prior to the Notice to Proceed (NTP).

The CQCP shall be organized to address, as a minimum, the following:

1. QC organization and resumes of key staff
2. Project progress schedule
3. Submittals schedule
4. Inspection requirements
5. QC testing plan
6. Documentation of QC activities and distribution of QC reports
7. Requirements for corrective action when QC and/or QA acceptance criteria are not met
8. Material quality and construction means and methods. Address all elements applicable to the Project that affect the quality of the pavement structure including subgrade, subbase, base, and surface course. Some elements that must be addressed include, but is not limited to mix design, aggregate grading, stockpile management, mixing and transporting, placing and finishing, quality control testing and inspection, smoothness, laydown plan, equipment, and temperature management plan.

Contractor must add any additional elements to the CQCP that is necessary to adequately control all production and/or construction processes required by this contract.

100-3 CQCP organization. The CQCP shall be implemented by the establishment of a QC organization. An organizational chart shall be developed to show all QC personnel, their authority, and how these personnel integrate with other management/production and construction functions and personnel.

The organizational chart shall identify all QC staff by name and function, and shall indicate the total staff required to implement all elements of the CQCP, including inspection and testing for each item of work. If necessary, different technicians can be used for specific inspection and testing functions for different items of work. If an outside organization or independent testing laboratory is used for implementation of all or part of the CQCP, the personnel assigned shall be subject to the qualification requirements of paragraphs 100-03a and 100-03b. The organizational chart shall indicate which personnel are Contractor employees and which are provided by an outside organization.

The QC organization shall, as a minimum, consist of the following personnel:

a. Program Administrator. Contractor Quality Control Program Administrator (CQCPA) must be a full-time employee of Contractor, or a consultant engaged by Contractor. The CQCPA must have a minimum of five (5) years of experience in QC pavement construction with prior QC experience on a project of comparable size and scope as the contract.

Included in the five (5) years of paving/QC experience, the CQCPA must meet at least one of the following requirements:

(1) Professional Engineer with one (1) year of airport paving experience.

(2) Engineer-in-training with two (2) years of airport paving experience.

(3) National Institute for Certification in Engineering Technologies (NICET) Civil Engineering Technology Level IV with three (3) years of airport paving experience.

(4) An individual with four (4) years of airport paving experience, with a Bachelor of Science Degree in Civil Engineering, Civil Engineering Technology, or Construction.

The CQCPA must have full authority to institute any and all actions necessary for the successful implementation of the CQCP to ensure compliance with the contract plans and technical specifications. The CQCPA authority must include the ability to immediately stop production until materials and/or processes are in compliance with contract specifications. The CQCPA must report directly to a principal officer of the construction firm. The CQCPA may supervise the Quality Control Program on more than one project provided that person can be at the job site within two (2) hours after being notified of a problem.

b. QC technicians. A sufficient number of QC technicians necessary to adequately implement the CQCP must be provided. These personnel must be either Engineers, engineering technicians, or experienced craftsman with qualifications in the appropriate field equivalent to NICET Level II in Civil Engineering Technology or higher, and shall have a minimum of two (2) years of experience in their area of expertise.

The QC technicians must report directly to the CQCPA and shall perform the following functions:

(1) Inspection of all materials, construction, plant, and equipment for conformance to the technical specifications, and as required by Paragraph 100-6.

(2) Performance of all QC tests as required by the technical specifications and paragraph100-8.

(3) Performance of tests for the RPR when required by the technical specifications.

Certification at an equivalent level of qualification and experience by a state or nationally recognized organization will be acceptable in lieu of NICET certification.

c. Staffing levels. Contractor shall provide sufficient qualified QC personnel to monitor each work activity at all times. Where material is being produced in a plant for incorporation into the work, separate plant and field technicians shall be provided at each plant and field placement location. The scheduling and coordinating of all inspection and testing must match the type and pace of work activity. The CQCP shall state where different technicians will be required for different work elements.

100-4 Project progress schedule. Critical QC activities must be shown on the Project schedule as required by Section 80, Paragraph 80-03, Execution and Progress.

100-5 Submittals schedule. Contractor shall submit a detailed listing of all submittals (for example, mix designs, material certifications) and shop drawings required by the technical specifications. The listing can be developed in a spreadsheet format and shall include as a minimum:

a. Specification item number

b. Item description

c. Description of submittal

d. Specification paragraph requiring submittal

e. Scheduled date of submittal

100-6 Inspection requirements. QC inspection functions shall be organized to provide inspections for all definable features of work, as detailed below. All inspections shall be documented by Contractor as specified by Paragraph 100-9.

Inspections shall be performed as needed to ensure continuing compliance with contract requirements until completion of the particular feature of work. Inspections shall include the following minimum requirements:

a. During plant operation for material production, QC test results and periodic inspections shall be used to ensure the quality of aggregates and other mix components, and to adjust and control mix proportioning to meet the approved mix design and other requirements of the technical specifications. All equipment used in proportioning and mixing shall be inspected to ensure its proper operating condition. The CQCP shall detail how these and other QC functions will be accomplished and used.

b. During field operations, QC test results and periodic inspections shall be used to ensure the quality of all materials and workmanship. All equipment used in placing, finishing, and compacting shall be inspected to ensure its proper operating condition and to ensure that all such operations are in conformance to the technical specifications and are within the plan dimensions, lines, grades, and tolerances specified. The CQCP shall document how these and other QC functions will be accomplished and used.

100-7 Contractor QC testing facility.

a. For projects that include Item P-401, Item P-403, and Item P-404, Contractor shall ensure facilities, including all necessary equipment, materials, and current reference standards, are provided that meet requirements in the following paragraphs of ASTM D3666, Standard Specification for Minimum Requirements for Agencies Testing and Inspecting Road and Paving Materials:

- 8.1.3 Equipment Calibration and Checks;
- 8.1.9 Equipment Calibration, Standardization, and Check Records;
- 8.1.12 Test Methods and Procedures

b. For projects that include P-501, Contractor shall ensure facilities, including all necessary equipment, materials, and current reference standards, are provided that meet requirements in the following paragraphs of ASTM C1077, Standard Practice for Agencies Testing Concrete and Concrete Aggregates for Use in Construction and Criteria for Testing Agency Evaluation:

- 7 Test Methods and Procedures
- 8 Facilities, Equipment, and Supplemental Procedures

100-8 QC testing plan. As a part of the overall CQCP, Contractor shall implement a QC testing plan, as required by the technical specifications. The testing plan shall include the minimum tests and test frequencies required by each technical specification Item, as well as any additional QC tests that Contractor deems necessary to adequately control production and/or construction processes.

The QC testing plan can be developed in a spreadsheet fashion and shall, as a minimum, include the following:

a. Specification item number (e.g., P-401)

b. Item description (e.g., Hot Mix Asphalt Pavements)

c. Test type (e.g., gradation, grade, asphalt content)

d. Test standard (e.g., ASTM or American Association of State Highway and Transportation Officials (AASHTO) test number, as applicable)

e. Test frequency (e.g., as required by technical specifications or minimum frequency when requirements are not stated)

f. Responsibility (e.g., plant technician)

g. Control requirements (e.g., target, permissible deviations)

The QC testing plan shall contain a statistically-based procedure of random sampling for acquiring test samples in accordance with ASTM D3665. The RPR shall be provided the opportunity to witness QC sampling and testing.

All QC test results shall be documented by Contractor as required by Paragraph 100-9.

100-9 Documentation. Contractor shall maintain current QC records of all inspections and tests performed. These records shall include factual evidence that the required QC inspections or tests have been performed, including type and number of inspections or tests involved; results of inspections or tests; nature of defects, deviations, causes for rejection, etc.; proposed remedial action; and corrective actions taken.

These records must cover both conforming and defective or deficient features, and must include a statement that all supplies and materials incorporated in the work are in full compliance with the terms of the contract. Legible copies of these records shall be furnished to the RPR daily. The records shall cover all work placed subsequent to the previously furnished records and shall be verified and signed by the CQCPA.

Contractor QC records required for the contract shall include, but are not necessarily limited to, the following records:

a. Daily inspection reports. Each Contractor QC technician shall maintain a daily log of all inspections performed for both Contractor and subcontractor operations. These technician's daily reports shall provide factual evidence that continuous QC inspections have been performed and shall, as a minimum, include the following:

(1) Technical specification item number and description

(2) Compliance with approved submittals

(3) Proper storage of materials and equipment

(4) Proper operation of all equipment

(5) Adherence to plans and technical specifications

(6) Summary of any necessary corrective actions

(7) Safety inspection.

The daily inspection reports shall identify all QC inspections and QC tests conducted, results of inspections, location and nature of defects found, causes for rejection, and remedial or corrective actions taken or proposed.

The daily inspection reports shall be signed by the responsible QC technician and the CQCPA. The RPR shall be provided at least one copy of each daily inspection report on the work day following the day of record. When QC inspection and test results are recorded and transmitted electronically, the results must be archived.

b. Daily test reports. Contractor shall be responsible for establishing a system that will record all QC test results. Daily test reports shall document the following information:

(1) Technical specification item number and description

(2) Test designation

(3) Location

(4) Date of test

(5) Control requirements

(6) Test results

(7) Causes for rejection

(8) Recommended remedial actions

(9) Retests

Test results from each day's work period shall be submitted to the RPR prior to the start of the next day's work period. When required by the technical specifications, Contractor shall maintain statistical QC charts. When QC daily test results are recorded and transmitted electronically, the results must be archived.

100-10 Corrective action requirements. The CQCP shall indicate the appropriate action to be taken when a process is deemed, or believed, to be out of control (out of tolerance) and detail what action will be taken to bring the process into control. The requirements for corrective action shall include both general requirements for operation of the CQCP as a whole, and for individual items of work contained in the technical specifications.

The CQCP shall detail how the results of QC inspections and tests will be used for determining the need for corrective action and shall contain clear rules to gauge when a process is out of control and the type of correction to be taken to regain process control.

When applicable or required by the technical specifications, Contractor shall establish and use statistical QC charts for individual QC tests. The requirements for corrective action shall be linked to the control charts.

100-11 Inspection and/or observations by the RPR. All items of material and equipment are subject to inspection and/or observation by the RPR at the point of production, manufacture or shipment to determine if Contractor, producer, manufacturer or shipper maintains an adequate QC system in conformance with the requirements detailed here and the applicable technical specifications and plans. In addition, all items of materials, equipment and work in place shall be subject to inspection and/or observation by the RPR at the site for the same purpose.

Inspection and/or observations by the RPR does not relieve Contractor of performing QC inspections of either on-site or off-site Contractor's or subcontractor's work.

100-12 Noncompliance.

a. The Resident Project Representative (RPR) will provide written notice to Contractor of any noncompliance with their CQCP. After receipt of such notice, Contractor must take corrective action.

b. When QC activities do not comply with either the CQCP or the contract provisions or when Contractor fails to properly operate and maintain an effective CQCP, and no effective corrective actions have been taken after notification of non-compliance, the RPR will recommend Owner take the following actions:

(1) Order Contractor to replace ineffective or unqualified QC personnel or subcontractors and/or

(2) Order Contractor to stop operations until appropriate corrective actions are taken.

METHOD OF MEASUREMENT

100-13 Basis of measurement and payment. Contractor Quality Control Program (CQCP) is for the personnel, tests, facilities, and documentation required to implement the CQCP. The CQCP will be paid as a lump sum with the following schedule of partial payments:

a. With first pay request, 25 percent with approval of CQCP and completion of the Quality Control (QC)/Quality Assurance (QA) workshop.

b. When 25 percent or more of the original contract is earned, an additional 25 percent.

c. When 50 percent or more of the original contract is earned, an additional 20 percent.

d. When 75 percent or more of the original contract is earned, an additional 20 percent.

e. After final inspection and acceptance of Project, the final 10 percent.

BASIS OF PAYMENT

100-14 Payment will be made under:

Item C-100	Contractor Quality Control Program (CQCP

REFERENCES

The publications listed below form a part of this specification to the extent referenced. The publications are referred to within the text by the basic designation only.

National Institute for Certification in Engineering Technologies (NICET)

ASTM International (ASTM)

ASTM C1077	Standard Practice for Agencies Testing Concrete and Concrete Aggregates for Use in Construction and Criteria for Testing Agency Evaluation
ASTM D3665	Standard Practice for Random Sampling of Construction Materials
ASTM D3666	Standard Specification for Minimum Requirements for Agencies Testing and Inspecting Road and Paving Materials

END OF ITEM C-100

Item C-102 Temporary Air and Water Pollution, Soil Erosion, and Siltation Control

DESCRIPTION

102-1. This item shall consist of temporary control measures as shown on the plans or as ordered by the Resident Project Representative (RPR) during the life of a contract to control pollution of air and water, soil erosion, and siltation through the use of silt fences, berms, dikes, dams, sediment basins, fiber mats, gravel, mulches, grasses, slope drains, and other erosion control devices or methods.

Temporary erosion control shall be in accordance with the approved erosion control plan; the approved Construction Safety and Phasing Plan (CSPP) and AC 150/5370-2, *Operational Safety on Airports During Construction*. The temporary erosion control measures contained herein shall be coordinated with the permanent erosion control measures specified as part of this contract to the extent practical to assure economical, effective, and continuous erosion control throughout the construction period.

Temporary control may include work outside the construction limits such as borrow pit operations, equipment and material storage sites, waste areas, and temporary plant sites.

Temporary control measures shall be designed, installed and maintained to minimize the creation of wildlife attractants that have the potential to attract hazardous wildlife on or near public-use airports.

MATERIALS

102-2.1 Grass. Grass that will not compete with the grasses sown later for permanent cover per Item T-901shall be a quick-growing species (such as ryegrass, Italian ryegrass, or cereal grasses) suitable to the area providing a temporary cover. Selected grass species shall not create a wildlife attractant.

102-2.2 Mulches. Mulches may be hay, straw, fiber mats, netting, bark, wood chips, or other suitable material reasonably clean and free of noxious weeds and deleterious materials per Item T-908. Mulches shall not create a wildlife attractant.

102-2.3 Fertilizer. Fertilizer shall be a standard commercial grade and shall conform to all federal and state regulations and to the standards of the Association of Official Agricultural Chemists.

102-2.4 Slope drains. Slope drains may be constructed of pipe, fiber mats, rubble, concrete, asphalt, or other materials that will adequately control erosion.

102-2.5 Silt fence. Silt fence shall consist of polymeric filaments which are formed into a stable network such that filaments retain their relative positions. Synthetic filter fabric shall contain ultraviolet ray inhibitors and stabilizers to provide a minimum of six months of expected usable construction life. Silt fence shall meet the requirements of ASTM D6461.

102-2.6 Other. All other materials shall meet commercial grade standards and shall be approved by RPR before being incorporated into the Project.

CONSTRUCTION REQUIREMENTS

102-3.1 General. In the event of conflict between these requirements and pollution control laws, rules, or regulations of other federal, state, or local agencies, the more restrictive laws, rules, or regulations shall apply.

RPR shall be responsible for assuring compliance to the extent that construction practices, construction operations, and construction work are involved.

102-3.2 Schedule. Prior to the start of construction, Contractor shall submit schedules in accordance with the approved Construction Safety and Phasing Plan (CSPP) and the plans for accomplishment of temporary and permanent erosion control work for clearing and grubbing; grading; construction; paving; and structures at watercourses. Contractor shall also submit a proposed method of erosion and dust control on haul roads and borrow pits and a plan for disposal of waste materials. Work shall not be started until the erosion control schedules and methods of operation for the applicable construction have been accepted by RPR.

102-3.3 Construction details. Contractor will be required to incorporate all permanent erosion control features into the Project at the earliest practicable time as outlined in the plans and approved CSPP. Except where future construction operations will damage slopes, Contractor shall perform the permanent seeding and mulching and other specified slope protection work in stages, as soon as substantial areas of exposed slopes can be made available. Temporary erosion and pollution control measures will be used to correct conditions that develop during construction that were not foreseen during the design stage; that are needed prior to installation of permanent control features; or that are needed temporarily to control erosion that develops during normal construction practices, but are not associated with permanent control features on the Project.

Where erosion may be a problem, schedule and perform clearing and grubbing operations so that grading operations and permanent erosion control features can follow immediately if project conditions permit. Temporary erosion control measures are required if permanent measures cannot immediately follow grading operations. RPR shall limit the area of clearing and grubbing, excavation, borrow, and embankment operations in progress, commensurate with Contractor's capability and progress in keeping the finish grading, mulching, seeding, and other such permanent control measures current with the accepted schedule. If seasonal limitations make such coordination unrealistic, temporary erosion control measures shall be taken immediately to the extent feasible and justified as directed by RPR.

Contractor shall provide immediate permanent or temporary pollution control measures to minimize contamination of adjacent streams or other watercourses, lakes, ponds, or other areas of water impoundment as directed by RPR. If temporary erosion and pollution control measures are required due to Contractor's negligence, carelessness, or failure to install permanent controls as a part of the work as scheduled or directed by RPR, the work shall be performed by Contractor and the cost shall be incidental to this item.

RPR may increase or decrease the area of erodible earth material that can be exposed at any time based on an analysis of project conditions.

The erosion control features installed by Contractor shall be maintained by Contractor during the construction period.

Provide temporary structures whenever construction equipment must cross watercourses at frequent intervals. Pollutants such as fuels, lubricants, bitumen, raw sewage, wash water from concrete mixing operations, and other harmful materials shall not be discharged into any waterways, impoundments or into natural or manmade channels.

102-3.4 Installation, maintenance and removal of silt fence. Silt fences shall extend minimum 16 inches and a maximum of 34 inches above the ground surface. Posts shall be set no more than 10 feet on center. Filter fabric shall be cut from a continuous roll to the length required minimizing joints where possible. When joints are necessary, the fabric shall be spliced at a support post with a minimum 12-inch overlap and securely sealed. A trench shall be excavated approximately 4 inches deep by 4 inches wide on the upslope side of the silt fence. The trench shall be backfilled and the soil compacted over the silt fence fabric. Contractor shall remove and dispose of silt that accumulates during construction and prior to establishment of permanent erosion control. The fence shall be maintained in good working condition until permanent erosion control is established. Silt fence shall be removed upon approval of RPR.

METHOD OF MEASUREMENT

102-4.1 Temporary erosion and pollution control work required will be performed as scheduled or directed by RPR. Completed and accepted work will be measured as follows:

a. Temporary seeding and mulching will be measured by the square yard.

b. Temporary slope drains will be measured by the linear foot.

c. Temporary benches, dikes, dams, and sediment basins will be measured by the cubic yard of excavation performed, including necessary cleaning of sediment basins, and the cubic yard of embankment placed as directed by RPR.

d. All fertilizing will be measured by the ton.

e. Installation and removal of silt fence will be measured by the linear foot.

102-4.2 Control work performed for protection of construction areas outside the construction limits, such as borrow and waste areas, haul roads, equipment and material storage sites, and temporary plant sites, will not be measured and paid for directly but shall be considered as a subsidiary obligation of Contractor.

BASIS OF PAYMENT

102-5.1 Accepted quantities of temporary water pollution, soil erosion, and siltation control work ordered by RPR and measured as provided in Paragraph 102-4.1 will be paid for under:

Item C-102-5.1a Installation and removal of silt fence per linear feet

Where other directed work falls within the specifications for a work item that has a contract price, the units of work shall be measured and paid for at the contract unit price bid for the various items.

Temporary control features not covered by contract items that are ordered by RPR will be paid for in accordance with Section 90, Paragraph 90-05 *Payment for Extra Work*.

REFERENCES

The publications listed below form a part of this Specification to the extent referenced. The publications are referred to within the text by the basic designation only.

Advisory Circulars (AC)

AC 150/5200-33 *Hazardous Wildlife Attractants on or Near Airports*

AC 150/5370-2 *Operational Safety on Airports During Construction*

ASTM International (ASTM)

ASTM D6461 *Standard Specification for Silt Fence Materials*

United States Department of Agriculture (USDA)

FAA/USDA Wildlife Hazard Management at Airports, A Manual for Airport Personnel

END OF ITEM C-102

Item C-105 Mobilization

105-1 Description. This item of work shall consist of, but is not limited to, work and operations necessary for the movement of personnel, equipment, material, and supplies to and from the project site for work on the project except as provided in the contract as separate pay items.

105-2 Mobilization limit. Mobilization shall be limited to 10 percent of the total project cost.

105-3 Posted notices. Prior to commencement of construction activities, the Contractor must post the following documents in a prominent and accessible place where they may be easily viewed by all employees of the prime Contractor and by all employees of subcontractors engaged by the prime Contractor: Equal Employment Opportunity (EEO) Poster "Equal Employment Opportunity is the Law" in accordance with the Office of Federal Contract Compliance Programs Executive Order 11246, as amended; Davis Bacon Wage Poster (WH 1321) - DOL "Notice to All Employees" Poster; and Applicable Davis-Bacon Wage Rate Determination. These notices must remain posted until final acceptance of the work by the Owner.

105-4 Engineer/RPR field office. An Engineer/RPR field office is not required.

METHOD OF MEASUREMENT

105-5 Basis of measurement and payment. Based upon the contract lump sum price for "Mobilization" partial payments will be allowed as follows:

a. With first pay request, 25 percent.

b. When 25 percent or more of the original contract is earned, an additional 25 percent.

c. When 50 percent or more of the original contract is earned, an additional 40 percent.

d. After Final Inspection, Staging area clean-up and delivery of all Project Closeout materials as required by Section 90, Paragraph 90-11, Contractor Final Project Documentation, the final 10 percent.

BASIS OF PAYMENT

105-6 Payment will be made under:

Item C-105 Mobilization

REFERENCES

The publications listed below form a part of this Specification to the extent referenced. The publications are referred to within the text by the basic designation only.

Office of Federal Contract Compliance Programs (OFCCP)

Executive Order 11246, as amended

EEOC-P/E-1 – Equal Employment Opportunity is the Law Poster

United States Department of Labor, Wage and Hour Division (WHD)

WH 1321 – Employee Rights under the Davis-Bacon Act Poster

END OF ITEM C-105

Item P-151 Clearing and Grubbing

DESCRIPTION

151-1.1 This item shall consist of clearing or clearing and grubbing, including the disposal of materials, for all areas within the limits designated on the plans or as required by the Resident Project Representative (RPR).

a. Clearing shall consist of the cutting and removal of all trees, stumps, brush, logs, hedges, the removal of fences and other loose or projecting material from the designated areas. The grubbing of stumps and roots will not be required.

b. Clearing and grubbing shall consist of clearing the surface of the ground of the designated areas of all trees, stumps, down timber, logs, snags, brush, undergrowth, hedges, heavy growth of grass or weeds, fences, structures, debris, and rubbish of any nature, natural obstructions or such material which in the opinion of RPR is unsuitable for the foundation of strips, pavements, or other required structures, including the grubbing of stumps, roots, matted roots, foundations, and the disposal from the project of all spoil materials resulting from clearing and grubbing.

c. Tree Removal. Tree Removal shall consist of the cutting and removal of isolated single trees or isolated groups of trees, and the grubbing of stumps and roots. The removal of all the trees of this classification shall be in accordance with the requirements for the particular area being cleared.

CONSTRUCTION METHODS

151-2.1 General. The areas denoted on the plans to be cleared and grubbed shall be staked on the ground by Contractor as indicated on the plans.

The removal of existing structures and utilities required to permit orderly progress of work shall be accomplished by local agencies, unless otherwise shown on the plans. Whenever a telephone pole, pipeline, conduit, sewer, roadway, or other utility is encountered and must be removed or relocated, Contractor shall advise RPR who will notify the proper local authority or owner to secure prompt action.

151-2.1.1 Disposal. All materials removed by clearing or by clearing and grubbing shall be disposed of outside the Airport's limits at Contractor's responsibility, except when otherwise directed by RPR. As far as practicable, waste concrete and masonry shall be placed on slopes of embankments or channels. When embankments are constructed of such material, this material shall be placed in accordance with requirements for formation of embankments. Any broken concrete or masonry that cannot be used in construction and all other materials not considered suitable for use elsewhere, shall be disposed of by Contractor. In no case, shall any discarded materials be left in windrows or piles adjacent to or within the airport limits. The manner and location of disposal of materials shall be subject to the approval of RPR and shall not create an unsightly or objectionable view. When Contractor is required to locate a disposal area outside the airport property limits, Contractor shall obtain and file with RPR permission in writing from the property owner for the use of private property for this purpose.

151-2.1.2 Blasting. Blasting shall not be allowed.

151-2.2 Clearing. Contractor shall clear the staked or indicated area of all materials as indicated on the plans. Trees unavoidably falling outside the specified clearing limits must be cut up, removed, and disposed of in a satisfactory manner. To minimize damage to trees that are to be left standing, trees shall be felled

toward the center of the area being cleared. Contractor shall preserve and protect from injury all trees not to be removed. The trees, stumps, and brush shall be cut flush with the original ground surface. The grubbing of stumps and roots will not be required.

Fences shall be removed and disposed of as directed by RPR. Fence wire shall be neatly rolled and the wire and posts stored on the airport if they are to be used again, or stored at a location designated by RPR if the fence is to remain the property of a local owner or authority.

151-2.3 Clearing and grubbing. In areas designated to be cleared and grubbed, all stumps, roots, buried logs, brush, grass, and other unsatisfactory materials as indicated on the plans, shall be removed, except where embankments exceeding 3-1/2 feet in depth will be constructed outside of paved areas. For embankments constructed outside of paved areas, all unsatisfactory materials shall be removed, but sound trees, stumps, and brush can be cut off flush with the original ground and allowed to remain. Tap roots and other projections over 1-1/2 inches in diameter shall be grubbed out to a depth of at least 18 inches below the finished subgrade or slope elevation.

Any buildings and miscellaneous structures that are shown on the plans to be removed shall be demolished or removed, and all materials shall be disposed of by removal from the site. The cost of removal is incidental to this item. The remaining or existing foundations, wells, cesspools, and like structures shall be destroyed by breaking down the materials of which the foundations, wells, cesspools, etc., are built to a depth at least 2 feet below the existing surrounding ground. Any broken concrete, blocks, or other objectionable material that cannot be used in backfill shall be removed and disposed of at Contractor's expense. The holes or openings shall be backfilled with acceptable material and properly compacted.

All holes in embankment areas remaining after the grubbing operation shall have the sides of the holes flattened to facilitate filling with acceptable material and compacting as required in Item P-152. The same procedure shall be applied to all holes remaining after grubbing in areas where the depth of holes exceeds the depth of the proposed excavation.

METHOD OF MEASUREMENT

151-3.1 The quantities of clearing and grubbing as shown by the limits on the plans shall be the number of square yards of land specifically cleared and grubbed. Any quantity of tree removal shall be considered subsidiary to this item.

BASIS OF PAYMENT

151-4.1 Payment shall be made at the contract unit price per square yard for clearing and grubbing. This price shall be full compensation for furnishing all materials and for all labor, equipment, tools, and incidentals necessary to complete the item.

Payment will be made under:

Item P-151-4.1 Clearing and grubbing - per square yards

END OF ITEM P-151

Item P-152 Excavation, Subgrade, and Embankment

DESCRIPTION

152-1.1 This item covers excavation, disposal, placement, and compaction of all materials within the limits of the work required to construct safety areas, runways, taxiways, aprons, and intermediate areas as well as other areas for drainage, building construction, parking, or other purposes in accordance with these Specifications and in conformity to the dimensions and typical sections shown on the plans.

152-1.2 Classification. All material excavated shall be classified as defined below:

a. Unclassified excavation. Unclassified excavation shall consist of the excavation and disposal of all material, regardless of its nature.

152-1.3 Unsuitable excavation. Unsuitable material shall be removed from Project site and disposed, at Contractor expense. Materials containing construction trash, vegetable or organic matter, such as muck, peat, organic silt, or sod shall be considered unsuitable for use in embankment construction. Material suitable for topsoil may be used on the embankment slope when approved by RPR.

CONSTRUCTION METHODS

152-2.1 General. Before beginning excavation, grading, and embankment operations in any area, the area shall be cleared or cleared and grubbed in accordance with Item P-151.

The suitability of material to be placed in embankments shall be subject to approval by RPR. All unsuitable material shall be disposed of in waste areas as shown on the plans. All waste areas shall be graded to allow positive drainage of the area and adjacent areas. The surface elevation of waste areas shall be specified on the plans or approved by RPR.

When Contractor's excavating operations encounter artifacts of historical or archaeological significance, the operations shall be temporarily discontinued and RPR notified per Section 70, Paragraph 70-20. At the direction of RPR, Contractor shall excavate the site in such a manner as to preserve the artifacts encountered and allow for their removal. Such excavation will be paid for as extra work.

Areas outside the limits of the pavement areas where the top layer of soil has become compacted by hauling or other Contractor activities shall be scarified and disked to a depth of 4 inches, to loosen and pulverize the soil. Stones or rock fragments larger than 4 inches in their greatest dimension will not be permitted in the top 6 inches of the subgrade.

If it is necessary to interrupt existing surface drainage, sewers or under-drainage, conduits, utilities, or similar underground structures, Contractor shall be responsible for and shall take all necessary precautions to preserve them or provide temporary services. When such facilities are encountered, Contractor shall notify RPR, who shall arrange for their removal if necessary. Contractor, at their own expense, shall satisfactorily repair or pay the cost of all damage to such facilities or structures that may result from any of Contractor's operations during the period of the contract.

a. Blasting. Blasting shall not be allowed.

152-2.2 Excavation. No excavation shall be started until the work has been staked out by Contractor and RPR has obtained from Contractor, the survey notes of the elevations and measurements of the ground

surface. Contractor and RPR shall agree that the original ground lines shown on the original topographic mapping are accurate, or agree to any adjustments made to the original ground lines.

Digital terrain model (DTM) files of the existing surfaces, finished surfaces and other various surfaces were used to develop the design plans.

Volumetric quantities were calculated by comparing DTM files of the applicable design surfaces and generating Triangle Volume Reports. Electronic copies of DTM files and a paper copy of the original topographic map will be issued to the successful bidder.

Existing grades on the design cross sections or DTM's, where they do not match the locations of actual spot elevations shown on the topographic map, were developed by computer interpolation from those spot elevations. Prior to disturbing original grade, Contractor shall verify the accuracy of the existing ground surface by verifying spot elevations at the same locations where original field survey data was obtained as indicated on the topographic map. Contractor shall recognize that, due to the interpolation process, the actual ground surface at any particular location may differ somewhat from the interpolated surface shown on the design cross sections or obtained from the DTM's. Contractor's verification of original ground surface, however, shall be limited to verification of spot elevations as indicated herein, and no adjustments will be made to the original ground surface unless Contractor demonstrates that spot elevations shown are incorrect. For this purpose, spot elevations which are within 0.1 foot of the stated elevations for ground surfaces, or within 0.04 foot for hard surfaces (pavements, buildings, foundations, structures, etc.) shall be considered "no change." Only deviations in excess of these will be considered for adjustment of the original ground surface. If Contractor's verification identifies discrepancies in the topographic map, Contractor shall notify RPR in writing at least two weeks before disturbance of existing grade to allow sufficient time to verify the submitted information and make adjustments to the design cross sections or DTM's. Disturbance of existing grade in any area shall constitute acceptance by Contractor of the accuracy of the original elevations shown on the topographic map for that area.

All areas to be excavated shall be stripped of vegetation and topsoil. Topsoil shall be stockpiled for future use in areas designated on the plans or by RPR. All suitable excavated material shall be used in the formation of embankment, subgrade, or other purposes as shown on the plans. All unsuitable material shall be disposed of as shown on the plans.

The grade shall be maintained so that the surface is well drained at all times.

When the volume of the excavation exceeds that required to construct the embankments to the grades as indicated on the plans, the excess shall be used to grade the areas of ultimate development or disposed as directed by RPR. When the volume of excavation is not sufficient for constructing the embankments to the grades indicated, the deficiency shall be obtained from borrow areas.

a. Selective grading. When selective grading is indicated on the plans, the more suitable material designated by RPR shall be used in constructing the embankment or in capping the pavement subgrade. If, at the time of excavation, it is not possible to place this material in its final location, it shall be stockpiled in approved areas until it can be placed. The more suitable material shall then be placed and compacted as specified. Selective grading shall be considered incidental to the work involved. The cost of stockpiling and placing the material shall be included in the various pay items of work involved.

b. Undercutting. Rock, shale, hardpan, loose rock, boulders, or other material unsatisfactory for safety areas, subgrades, roads, shoulders, or any areas intended for turf shall be excavated to a minimum depth of 12 inches (300 mm) below the subgrade or to the depth specified by RPR. Muck, peat, matted roots, or other yielding material, unsatisfactory for subgrade foundation, shall be removed to the depth specified. Unsuitable materials shall be disposed off the airport. The cost is incidental to this item. This excavated material shall be paid for at the contract unit price per square yard for unclassified excavation. The excavated area shall be backfilled with suitable material obtained from the grading operations or borrow areas and compacted to specified densities. The necessary backfill will constitute a part of the embankment.

Where rock cuts are made, backfill with select material. Any pockets created in the rock surface shall be drained in accordance with the details shown on the plans. Undercutting will be paid as unclassified excavation.

c. Over-break. Over-break, including slides, is that portion of any material displaced or loosened beyond the finished work as planned or authorized by RPR. All over-break shall be graded or removed by Contractor and disposed of as directed by RPR. RPR shall determine if the displacement of such material was unavoidable and their own decision shall be final. Payment will not be made for the removal and disposal of over-break that RPR determines as avoidable. Unavoidable over-break will be classified as "Unclassified Excavation."

d. Removal of utilities. The removal of existing structures and utilities required to permit the orderly progress of work will be accomplished by Contractor as indicated on the plans. All existing foundations shall be excavated at least 2 feet below the top of subgrade or as indicated on the plans, and the material disposed of as directed by RPR. All foundations thus excavated shall be backfilled with suitable material and compacted as specified for embankment or as shown on the plans.

152-2.3 Borrow excavation. Borrow areas are not required.

152-2.4 Drainage excavation. Drainage excavation shall consist of excavating drainage ditches including intercepting, inlet, or outlet ditches; or other types as shown on the plans. The work shall be performed in sequence with the other construction. Ditches shall be constructed prior to starting adjacent excavation operations. All satisfactory material shall be placed in embankment fills; unsuitable material shall be placed in designated waste areas or as directed by RPR. All necessary work shall be performed true to final line, elevation, and cross-section. Contractor shall maintain ditches constructed on the project to the required cross-section and shall keep them free of debris or obstructions until the project is accepted.

152-2.5 Preparation of cut areas or areas where existing pavement has been removed. In those areas on which a subbase or base course is to be placed, the top 6 inches of subgrade shall be compacted to not less than 100 percent of maximum density for non-cohesive soils, and 95 percent of maximum density for cohesive soils as determined by ASTM D698. As used in this Specification, "non-cohesive" shall mean those soils having a plasticity index (PI) of less than 3 as determined by ASTM D4318.

152-2.6 Preparation of embankment area. All sod and vegetative matter shall be removed from the surface upon which the embankment is to be placed. The cleared surface shall be broken up by plowing or scarifying to a minimum depth of 6 inches d shall then be compacted per Paragraph 152-2.10.

Sloped surfaces steeper than one (1) vertical to four (4) horizontal shall be plowed, stepped, benched, or broken up so that the fill material will bond with the existing material. When the subgrade is part fill and part excavation or natural ground, the excavated or natural ground portion shall be scarified to a depth of 12 inches and compacted as specified for the adjacent fill.

No direct payment shall be made for the work performed under this section. The necessary clearing and grubbing and the quantity of excavation removed will be paid for under the respective items of work.

152-2.7 Control Strip. The first half-day of construction of subgrade and/or embankment shall be considered as a control strip for Contractor to demonstrate, in the presence of RPR, that the materials, equipment, and construction processes meet the requirements of this Specification. The sequence and manner of rolling necessary to obtain specified density requirements shall be determined. The maximum compacted thickness may be increased to a maximum of 12 inches upon Contractor’s demonstration that approved equipment and operations will uniformly compact the lift to the specified density. RPR must witness this demonstration and approve the lift thickness prior to full production.

Control strips that do not meet specification requirements shall be reworked, re-compacted, or removed and replaced at Contractor’s expense. Full operations shall not begin until the control strip has been accepted

by RPR. Contractor shall use the same equipment, materials, and construction methods for the remainder of construction, unless adjustments made by Contractor are approved in advance by RPR.

152-2.8 Formation of embankments. The material shall be constructed in lifts as established in the control strip, but not less than 6 inches nor more than 12 inches of compacted thickness.

When more than one lift is required to establish the layer thickness shown on the plans, the construction procedure described here shall apply to each lift. No lift shall be covered by subsequent lifts until tests verify that compaction requirements have been met. Contractor shall rework, re-compact and retest any material placed which does not meet the specifications.

The lifts shall be placed, to produce a soil structure as shown on the typical cross-section or as directed by RPR. Materials such as brush, hedge, roots, stumps, grass and other organic matter, shall not be incorporated or buried in the embankment.

Earthwork operations shall be suspended at any time when satisfactory results cannot be obtained due to rain, freezing, or other unsatisfactory weather conditions in the field. Frozen material shall not be placed in the embankment nor shall embankment be placed upon frozen material. Material shall not be placed on surfaces that are muddy, frozen, or contain frost. Contractor shall drag, blade, or slope the embankment to provide surface drainage at all times.

The material in each lift shall be within ±2 percent of optimum moisture content before rolling to obtain the prescribed compaction. The material shall be moistened or aerated as necessary to achieve a uniform moisture content throughout the lift. Natural drying may be accelerated by blending in dry material or manipulation alone to increase the rate of evaporation.

Contractor shall make the necessary corrections and adjustments in methods, materials or moisture content to achieve the specified embankment density.

RPR will take samples of excavated materials which will be used in embankment for testing to obtain a Moisture-Density Relations of Soils Report (Proctor) in accordance with ASTM D698. A new Proctor shall be obtained for each soil type based on visual classification.

Density tests will be taken by RPR for every 3,000 square yards of compacted embankment for each lift which is required to be compacted, or other appropriate frequencies as determined by RPR.

If the material has greater than 30 percent retained on the 3/4-inch sieve, follow AASHTO T-180 Annex Correction of maximum dry density and optimum moisture for oversized particles.

Rolling operations shall be continued until the embankment is compacted to not less than 100 percent of maximum density for non-cohesive soils, and 95 percent of maximum density for cohesive soils as determined by ASTM D698. Under all areas to be paved, the embankments shall be compacted to a depth of 6 inches and to a density of not less than 90 percent of the maximum density as determined by ASTM D698. As used in this Specification, "non-cohesive" shall mean those soils having a plasticity index (PI) of less than 3 as determined by ASTM D4318.

On all areas outside of the pavement areas, no compaction will be required on the top 4 inches which shall be prepared for a seedbed in accordance with Item T-901.

The in-place field density shall be determined in accordance with ASTM 6938 using Procedure A, the direct transmission method, and ASTM D6938 shall be used to determine the moisture content of the material. The machine shall be calibrated in accordance with ASTM D6938. The RPR shall perform all density tests. If the specified density is not attained, the area represented by the test or as designated by RPR shall be reworked and/or re-compacted and additional random tests made. This procedure shall be followed until the specified density is reached.

Compaction areas shall be kept separate, and no lift shall be covered by another lift until the proper density is obtained.

During construction of the embankment, Contractor shall route all construction equipment evenly over the entire width of the embankment as each lift is placed. Lift placement shall begin in the deepest portion of the embankment fill. As placement progresses, the lifts shall be constructed approximately parallel to the finished pavement grade line.

When rock, concrete pavement, asphalt pavement, and other embankment material are excavated at approximately the same time as the subgrade, the material shall be incorporated into the outer portion of the embankment and the subgrade material shall be incorporated under the future paved areas. Stones, fragmentary rock, and recycled pavement larger than 4 inches in their greatest dimensions will not be allowed in the top 12 inches of the subgrade. Rockfill shall be brought up in lifts as specified or as directed by RPR and the finer material shall be used to fill the voids forming a dense, compact mass. Rock, cement concrete pavement, asphalt pavement, and other embankment material shall not be disposed of except at places and in the manner designated on the plans or by RPR.

When the excavated material consists predominantly of rock fragments of such size that the material cannot be placed in lifts of the prescribed thickness without crushing, pulverizing or further breaking down the pieces, such material may be placed in the embankment as directed in lifts not exceeding 2 feet in thickness. Each lift shall be leveled and smoothed with suitable equipment by distribution of spalls and finer fragments of rock. The lift shall not be constructed above an elevation 4 feet below the finished subgrade.

152-2.9 Proof rolling. The purpose of proof rolling the subgrade is to identify any weak areas in the subgrade and not for compaction of the subgrade. Before start of embankment, and after compaction is completed, the subgrade area shall be proof rolled with a 20-ton tandem axle dual-wheel dump truck loaded to the legal limit with tires inflated to 80/100/150 psi in the presence of RPR. Apply a minimum of 50 percent coverage, or as specified by RPR, under pavement areas. A coverage is defined as the application of one tire print over the designated area. Soft areas of subgrade that deflect more than 1 inch or show permanent deformation greater than 1 inch shall be removed and replaced with suitable material or reworked to conform to the moisture content and compaction requirements in accordance with these Specifications. Removal and replacement of soft areas is incidental to this item.

152-2.10 Compaction requirements. The subgrade under areas to be paved shall be compacted to a depth of 6 inches and to a density of not less than 95 percent of the maximum dry density as determined by ASTM D698. The subgrade in areas outside the limits of the pavement areas shall be compacted to a depth of 6 inches and to a density of not less than 90 percent of the maximum density as determined by ASTM D698.

The material to be compacted shall be within ±2 percent of optimum moisture content before being rolled to obtain the prescribed compaction (except for expansive soils). When the material has greater than 30 percent retained on the 3/4-inch sieve, follow methods in ASTM D698. Tests for moisture content and compaction will be taken at a minimum of 1,500 S.Y. of subgrade. All quality assurance testing shall be done by RPR.

The in-place field density shall be determined in accordance with ASTM D6938 using Procedure A, the direct transmission method, and ASTM D6938 shall be used to determine the moisture content of the material. The machine shall be calibrated in accordance with ASTM D6938 within 12 months prior to its use on this contract. The gage shall be field standardized daily.

Density tests will be taken by RPR for every 1,500 square yards of completed subgrade. If a nuclear gage is used for density determination, two random readings shall be made for each 5,000 square yards.

Maximum density refers to maximum dry density at optimum moisture content unless otherwise specified.

If the specified density is not attained, the entire lot shall be reworked/recompacted and additional random tests made. This procedure shall be followed until the specified density is reached.

All cut-and-fill slopes shall be uniformly dressed to the slope, cross-section, and alignment shown on the plans or as directed by RPR and the finished subgrade shall be maintained.

152-2.11 Finishing and protection of subgrade. Finishing and protection of the subgrade is incidental to this item. Grading and compacting of the subgrade shall be performed so that it will drain readily. All low areas, holes or depressions in the subgrade shall be brought to grade. Scarifying, blading, rolling and other methods shall be performed to provide a thoroughly compacted subgrade shaped to the lines and grades shown on the plans. All ruts or rough places that develop in the completed subgrade shall be graded, re-compacted, and retested. Contractor shall protect the subgrade from damage and limit hauling over the finished subgrade to only traffic essential for construction purposes.

Contractor shall maintain the completed course in satisfactory condition throughout placement of subsequent layers. No subbase, base, or surface course shall be placed on the subgrade until the subgrade has been accepted by RPR.

152-2.12 Haul. All hauling will be considered a necessary and incidental part of the work. Contractor shall include the cost in the contract unit price for the pay of items of work involved. No payment will be made separately or directly for hauling on any part of the work.

Contractor's equipment shall not cause damage to any excavated surface, compacted lift or to the subgrade as a result of hauling operations. Any damage caused as a result of Contractor's hauling operations shall be repaired at Contractor's expense.

Contractor shall be responsible for providing, maintaining and removing any haul roads or routes within or outside of the work area, and shall return the affected areas to their former condition, unless otherwise authorized in writing by Owner. No separate payment will be made for any work or materials associated with providing, maintaining and removing haul roads or routes.

152-2.13 Surface Tolerances. In those areas on which a subbase or base course is to be placed, the surface shall be tested for smoothness and accuracy of grade and crown. Any portion lacking the required smoothness or failing in accuracy of grade or crown shall be scarified to a depth of at least 3 inches, reshaped and recompacted to grade until the required smoothness and accuracy are obtained and approved by RPR. Contractor shall perform all final smoothness and grade checks in the presence of RPR. Any deviation in surface tolerances shall be corrected by Contractor at Contractor’s expense.

a. Smoothness. The finished surface shall not vary more than ±1/2-inch when tested with a 12-foot straightedge applied parallel with and at right angles to the centerline. The straightedge shall be moved continuously forward at half the length of the 12-foot straightedge for the full length of each line on a 50-foot grid.

b. Grade. The grade and crown shall be measured on a 50-foot grid and shall be within ±0.05 feet of the specified grade.

On safety areas, turfed areas and other designated areas within the grading limits where no subbase or base is to placed, grade shall not vary more than 0.10 feet from specified grade. Any deviation in excess of this amount shall be corrected by loosening, adding or removing materials, and reshaping.

152-2.14 Topsoil. When topsoil is specified or required as shown on the plans or under Item T-905, it shall be salvaged from stripping or other grading operations. The topsoil shall meet the requirements of Item T-905. If, at the time of excavation or stripping, the topsoil cannot be placed in its final section of finished construction, the material shall be stockpiled at approved locations. Stockpiles shall be located as shown on the plans and the approved CSPP, and shall not be placed on areas that subsequently will require any excavation or embankment fill. If, in the judgment of RPR, it is practical to place the salvaged topsoil at the time of excavation or stripping, the material shall be placed in its final position without stockpiling or further re-handling.

Upon completion of grading operations, stockpiled topsoil shall be handled and placed as shown on the plans and as required in Item T-905. Topsoil shall be paid for as provided in Item T-905. No direct payment will be made for topsoil under Item P-152.

METHOD OF MEASUREMENT

152-3.1 Measurement for payment specified by the square yard shall be computed by the comparison of digital terrain model (DTM) surfaces for computation of neat line design quantities. The end area is that bound by the original ground line established by field cross-sections and the final theoretical pay line established by cross-sections shown on the plans, subject to verification by RPR.

152-3.1 The quantity of unclassified excavation to be paid for shall be the number of square yards measured in its original position. Measurement shall not include the quantity of materials excavated without authorization beyond normal slope lines, or the quantity of material used for purposes other than those directed.

152-3.2 The quantity of embankment in place shall be the number of square yards measured in its final position.

BASIS OF PAYMENT

152-4.1 Unclassified excavation payment shall be made at the contract unit price per square yard (cubic meter). This price shall be full compensation for furnishing all materials, labor, equipment, tools, and incidentals necessary to complete the item.

152-4.2 For embankment in place, payment shall be made at the contract unit price per square yard. This price shall be full compensation for furnishing all materials, labor, equipment, tools, and incidentals necessary to complete the item.

Payment will be made under:

Item P-152-4.1	Unclassified - per square yard;
Item P-152-4.2	Embankment in place - per square yard;
Item P-152-4.3	Grading and subgrade preparations under concrete, 6-inch thickness, per square yard.

REFERENCES

The publications listed below form a part of this Specification to the extent referenced. The publications are referred to within the text by the basic designation only.

American Association of State Highway and Transportation Officials (AASHTO)

AASHTO T-180	Standard Method of Test for Moisture-Density Relations of Soils Using a 4.54-kg (10-lb) Rammer and a 457-mm (18-in.) Drop

ASTM International (ASTM)

ASTM D698	Standard Test Methods for Laboratory Compaction Characteristics of Soil Using Standard Effort (12,400 ft-lbf/ft^3 (600 kN-m/m^3))
ASTM D1556	Standard Test Method for Density and Unit Weight of Soil in Place by the Sand-Cone Method

ASTM D1557	Standard Test Methods for Laboratory Compaction Characteristics of Soil Using Modified Effort (56,000 ft-lbf/ft^3 (2700 kN-m/m^3))
ASTM D6938	Standard Test Methods for In-Place Density and Water Content of Soil and Soil-Aggregate by Nuclear Methods (Shallow Depth)

Advisory Circulars (AC)

AC 150/5370-2	Operational Safety on Airports During Construction Software

Software

FAARFIELD – FAA Rigid and Flexible Iterative Elastic Layered Design

U.S. Department of Transportation

FAA RD-76-66	Design and Construction of Airport Pavements on Expansive Soils

END OF ITEM P-152

Item P-605 Joint Sealants for Pavements

DESCRIPTION

605-1.1 This item shall consist of providing and installing a resilient and adhesive joint sealing material capable of effectively sealing joints in pavement; joints between different types of pavements; and cracks in existing pavement.

MATERIALS

605-2.1 Joint sealants. Joint sealant materials shall meet the requirements of ASTM D5893 Standard Specifications for Cold Applied, Single Component, and Chemically Curing Silicone Joint Sealant for Portland Cement Concrete Pavements.

Each lot or batch of sealant shall be delivered to the jobsite in the manufacturer's original sealed container. Each container shall be marked with the manufacturer's name, batch or lot number, the safe heating temperature, and shall be accompanied by the manufacturer's certification stating that the sealant meets the requirements of this Specification.

605-2.2 Backer rod. The material furnished shall be a compressible, non-shrinking, non-staining, non-absorbing material that is non-reactive with the joint sealant in accordance with ASTM D5249. The backer-rod material shall be 25 percent ± 5 percent larger in diameter than the nominal width of the joint.

605-2.3 Bond breaking tapes. Provide a bond-breaking tape or separating material that is flexible, non-shrinkable, non-absorbing, non-staining, and non-reacting adhesive-backed tape. The material shall have a melting point at least 5 degrees F greater than the pouring temperature of the sealant being used when tested in accordance with ASTM D789. The bond breaker tape shall be approximately 1/8-inch wider than the nominal width of the joint and shall not bond to the joint sealant.

CONSTRUCTION METHODS

605-3.1 Time of application. Joints shall be sealed as soon after completion of the curing period as feasible and before the pavement is opened to traffic, including construction equipment. The pavement temperature shall be 50 degrees F and rising at the time of application of the poured joint sealing material. Do not apply sealant if moisture is observed in the joint.

605-3.2 Equipment. Machines, tools, and equipment used in the performance of the work required by this section shall be approved before the work is started and maintained in satisfactory condition at all times. Submit a list of proposed equipment to be used in performance of construction work including descriptive data, 14 days prior to use on the Project.

a. Tractor-mounted routing tool. Provide a routing tool, used for removing old sealant from the joints, of such shape and dimensions and so mounted on the tractor so that it will not damage the sides of the joints. The tool shall be designed so that it can be adjusted to remove the old material to varying depths as required. The use of V-shaped tools or rotary impact routing devices will not be permitted. Hand-operated spindle routing devices may be used to clean and enlarge random cracks.

b. Concrete saw. Provide a self-propelled power saw, with water-cooled diamond or abrasive saw blades, for cutting joints to the depths and widths specified.

c. Waterblasting equipment. The Contractor must demonstrate waterblasting equipment including the pumps, hose, guide, and nozzle size, under job conditions, before approval in accordance with Paragraph 605-3.3. The Contractor shall demonstrate, in the presence of the RPR, that the method cleans the joint and does not damage the joint.

e. Hand tools. Hand tools may be used, when approved, for removing defective sealant from a crack and repairing or cleaning the crack faces. Hand tools should be carefully evaluated for potential spalling effects prior to approval for use.

g. Cold-applied, single-component sealing equipment. The equipment for installing ASTM D5893 single component joint sealants shall consist of an extrusion pump, air compressor, following plate, hoses, and nozzle for transferring the sealant from the storage container into the joint opening. The dimension of the nozzle shall be such that the tip of the nozzle will extend into the joint to allow sealing from the bottom of the joint to the top. Maintain the initially approved equipment in good working condition, serviced in accordance with the supplier's instructions, and unaltered in any way without obtaining prior approval. Small hand-held air-powered equipment (i.e., caulking guns) may be used for small applications.

605-3.3 Preparation of joints. Pavement joints for application of material in this Specification must be dry, clean of all scale, dirt, dust, curing compound, and other foreign matter. The Contractor shall demonstrate, in the presence of the RPR, that the method cleans the joint and does not damage the joint.

a. Sawing. All joints shall be sawed in accordance with specifications and plan details. Immediately after sawing the joint, the resulting slurry shall be completely removed from joint and adjacent area by flushing with a jet of water, and by use of other tools as necessary.

b. Sealing. Immediately before sealing, the joints shall be thoroughly cleaned of all remaining laitance, curing compound, filler, protrusions of hardened concrete, old sealant, and other foreign material from the sides and upper edges of the joint space to be sealed. Cleaning shall be accomplished by concrete saw water blaster as specified in Paragraph 605-3.2. The newly exposed concrete joint faces and the pavement surface extending a minimum of 1/2-inch from the joint edge shall be sandblasted clean. Sandblasting shall be accomplished in a minimum of two passes. One pass per joint face with the nozzle held at an angle directly toward the joint face and not more than 3 inches from it. After final cleaning and immediately prior to sealing, blow out the joints with compressed air and leave them completely free of debris and water. The joint faces shall be surface dry when the seal is applied.

c. Backer Rod. When the joint opening is of a greater depth than indicated for the sealant depth, plug or seal off the lower portion of the joint opening using a backer rod in accordance with Paragraph 605-2.2 to prevent the entrance of the sealant below the specified depth. Take care to ensure that the backer rod is placed at the specified depth and is not stretched or twisted during installation.

d. Bond-breaking tape. Where inserts or filler materials contain bitumen, or the depth of the joint opening does not allow for the use of backup material, insert a bond-separating tape breaker in accordance with Paragraph 605-2.3 to prevent incompatibility with the filler materials and three-sided adhesion of the sealant. Securely bond the tape to the bottom of the joint opening so it will not float up into the new sealant.

605-3.4 Installation of sealants. Joints shall be inspected for proper width, depth, alignment, and preparation, and shall be approved by the RPR before sealing is allowed. Sealants shall be installed in accordance with the following requirements:

Immediately preceding, but not more than 50 feet ahead of the joint sealing operations, perform a final cleaning with compressed air. Fill the joints from the bottom up to 1/8-inch ±1/16-inch below the top of pavement surface; or bottom of groove for grooved pavement. Remove and discard excess or spilled sealant from the pavement by approved methods. Install the sealant in such a manner as to prevent the formation of voids and entrapped air. In no case shall gravity methods or pouring pots be used to install the sealant material. Traffic shall not be permitted over newly sealed pavement until authorized by the RPR. When a

primer is recommended by the manufacturer, apply it evenly to the joint faces in accordance with the manufacturer's instructions. Check the joints frequently to ensure that the newly installed sealant is cured to a tack-free condition within the time specified.

605-3.5 Inspection. The Contractor shall inspect the joint sealant for proper rate of cure and set, bonding to the joint walls, cohesive separation within the sealant, reversion to liquid, entrapped air, and voids. Sealants exhibiting any of these deficiencies at any time prior to the final acceptance of the Project shall be removed from the joint, wasted, and replaced as specified at no additional cost to the airport.

605-3.6 Clean-up. Upon completion of the Project, remove all unused materials from the site and leave the pavement in a clean condition.

METHOD OF MEASUREMENT

605-4.1 Joint sealing material shall be considered subsidiary to the most appropriate Bid Item.

BASIS OF PAYMENT

605-5.1 Payment for joint sealing material shall be considered subsidiary to the most appropriate Bid Item.

REFERENCES

The publications listed below form a part of this Specification to the extent referenced. The publications are referred to within the text by the basic designation only.

ASTM International (ASTM)

ASTM D789	Standard Test Method for Determination of Relative Viscosity of Polyamide (PA)
ASTM D5249	Standard Specification for Backer Material for Use with Cold- and Hot-Applied Joint Sealants in Portland-Cement Concrete and Asphalt Joints
ASTM D5893	Standard Specification for Cold Applied, Single Component, Chemically Curing Silicone Joint Sealant for Portland Cement Concrete Pavements

Advisory Circulars (AC)

AC 150/5340-30	Design and Installation Details for Airport Visual Aids

END ITEM P-605

Item P-610 Concrete for Miscellaneous Structures

DESCRIPTION

610-1.1 This item shall consist of concrete and reinforcement, as shown on the plans, prepared and constructed in accordance with these Specifications. This Specification shall be used for all concrete other than airfield pavement which are cast-in-place.

MATERIALS

610-2.1 General. Only approved materials, conforming to the requirements of these Specifications, shall be used in the work. Materials may be subject to inspection and tests at any time during their preparation or use. The source of all materials shall be approved by the Resident Project Representative (RPR) before delivery or use in the work. Representative preliminary samples of the materials shall be submitted by Contractor, when required, for examination and test. Materials shall be stored and handled to ensure preservation of their quality and fitness for use and shall be located to facilitate prompt inspection. All equipment for handling and transporting materials and concrete must be clean before any material or concrete is placed in them.

The use of pit-run aggregates shall not be permitted unless the pit-run aggregate has been screened and washed, and all fine and coarse aggregates stored separately and kept clean. The mixing of different aggregates from different sources in one storage stockpile or alternating batches of different aggregates shall not be permitted.

a. Reactivity. Fine aggregate and coarse aggregates to be used in all concrete shall have been tested separately within six months of the project in accordance with ASTM C1260. Test results shall be submitted to RPR. The aggregate shall be considered innocuous if the expansion of test specimens, tested in accordance with ASTM C1260, does not exceed 0.08 percent at 14 days (16 days from casting). If the expansion either or both test specimen is greater than 0.08 percent at 14 days, but less than 0.20 percent, a minimum of 25 percent of Type F fly ash, or 40-55 percent of slag cement shall be used in the concrete mix.

If the expansion is greater than 0.20 percent the aggregates shall not be used, and test results for other aggregates must be submitted for evaluation.

Testing for Alkali-Silica Reaction (ASR) may be omitted if material supplier can certify in writing aggregates supplied for this Project have not exhibited any effects of ASR within the last three years.

Testing for Alkali-Silica Reaction (ASR) may be omitted if material supplier can certify in writing aggregates supplied for this Project have not exhibited any effects of ASR within the last three years.

610-2.2 Coarse aggregate. The coarse aggregate for concrete shall meet the requirements of ASTM C33 and the requirements of Table 4, Class Designation 5S; and the grading requirements shown below, as required for the project.

Coarse Aggregate Grading Requirements

Maximum Aggregate Size	ASTM C33, Table 3 Grading Requirements (Size No.)
1 1/2 inch	467 or 4 and 67
1 inch	57
3/4 inch	67
1/2 inch	7

610-2.2.1 Coarse Aggregate susceptibility to durability (D) cracking. Not used.

610-2.3 Fine aggregate. The fine aggregate for concrete shall meet all fine aggregate requirements of ASTM C33.

610-2.4 Cement. Cement shall conform to the requirements of ASTM C150 Type I/II or ASTM C595.

610-2.5 Cementitious materials.

a. Fly ash. Fly ash shall meet the requirements of ASTM C618, with the exception of loss of ignition, where the maximum shall be less than 6 percent. Fly ash shall have a Calcium Oxide (CaO) content of less than 15 percent and a total available alkali content less than 3 percent per ASTM C311. Fly ash produced in furnace operations using liming materials or soda ash (sodium carbonate) as an additive shall not be acceptable. Contractor shall furnish the previous three most recent, consecutive ASTM C618 reports for each source of fly ash proposed in the concrete mix, and shall furnish each additional report as they become available during the project. The reports can be used for acceptance or the material may be tested independently by RPR.

b. Slag cement (ground granulated blast furnace (GGBF)). Slag cement shall conform to ASTM C989, Grades 100 or 120. Slag cement shall be used only at 25- to 55-percent rate of the total cementitious material by mass.

610-2.6 Water. Water used in mixing or curing shall be from potable water sources. Other sources shall be tested in accordance with ASTM C1602 prior to use.

610-2.7 Admixtures. Contractor shall submit certificates indicating that the material to be furnished meets all of the requirements indicated below. In addition, RPR may require Contractor to submit complete test data from an approved laboratory showing that the material to be furnished meets all of the requirements of the cited specifications. Subsequent tests may be made of samples taken by RPR from the supply of the material being furnished or proposed for use on the work to determine whether the admixture is uniform in quality with that approved.

a. Air-entraining admixtures. Air-entraining admixtures shall meet the requirements of ASTM C260 and shall consistently entrain the air content in the specified ranges under field conditions. The air-entrainment agent and any water reducer admixture shall be compatible.

b. Water-reducing admixtures. Water-reducing admixture shall meet the requirements of ASTM C494, Types A, B, or D. ASTM C494, Types F and G high range water reducing admixtures and ASTM C1017 flowable admixtures shall not be used.

c. Other chemical admixtures. The use of set retarding, and set-accelerating admixtures shall be approved by RPR. Retarding shall meet the requirements of ASTM C494, Types A, B, or D and set-accelerating shall meet the requirements of ASTM C494, Type C. Calcium chloride and admixtures containing calcium chloride shall not be used.

610-2.8 Premolded joint material. Premolded joint material for expansion joints shall meet the requirements of ASTM D1751 and D1752.

610-2.9 Joint filler. The filler for joints shall meet the requirements of Item P-605, unless otherwise specified.

610-2.10 Steel reinforcement. Reinforcing shall consist of reinforcing steel conforming to the requirements of ASTM A615.

610-2.11 Materials for curing concrete. Curing materials shall conform to ASTM C309, White-Pigmented Liquid Membrane-Forming Compound, Type 2, Class B.

CONSTRUCTION METHODS

610-3.1 General. Contractor shall furnish all labor, materials, and services necessary for, and incidental to, the completion of all work as shown on the drawings and specified here. All machinery and equipment used by Contractor on the work, shall be of sufficient size to meet the requirements of the work. All work shall be subject to the inspection and approval of RPR.

610-3.2 Concrete Mixture. The concrete shall develop a compressive strength of 4,000 psi in 28 days as determined by test cylinders made in accordance with ASTM C31 and tested in accordance with ASTM C39. The concrete shall contain not less than 470 pounds of cementitious material per cubic yard. The water cementitious ratio shall not exceed 0.45 by weight. The air content of the concrete shall be 5 percent ±1.2 percent as determined by ASTM C231 and shall have a slump of not more than 4 inches as determined by ASTM C143.

610-3.3 Mixing. Concrete may be mixed at the construction site, at a central point, or wholly or in part in truck mixers. The concrete shall be mixed and delivered in accordance with the requirements of ASTM C94 or C685.

The concrete shall be mixed only in quantities required for immediate use. Concrete shall not be mixed while the air temperature is below 40 degrees F without RPRs approval. If approval is granted for mixing under such conditions, aggregates or water, or both, shall be heated and the concrete shall be placed at a temperature not less than 50 degrees F nor more than 100 degrees F. Contractor shall be held responsible for any defective work, resulting from freezing or injury in any manner during placing and curing, and shall replace such work at his expense.

Retempering of concrete by adding water or any other material is not permitted.

The rate of delivery of concrete to the job shall be sufficient to allow uninterrupted placement of the concrete.

610-3.4 Forms. Concrete shall not be placed until all the forms and reinforcements have been inspected and approved by RPR. Forms shall be of suitable material and shall be of the type, size, shape, quality, and strength to build the structure as shown on the plans. The forms shall be true to line and grade and shall be mortar-tight and sufficiently rigid to prevent displacement and sagging between supports. The surfaces of forms shall be smooth and free from irregularities, dents, sags, and holes. Contractor shall be responsible for their adequacy.

The internal form ties shall be arranged so no metal will show in the concrete surface or discolor the surface when exposed to weathering when the forms are removed. All forms shall be wetted with water or with a non-staining mineral oil, which shall be applied immediately before the concrete is placed. Forms shall be constructed so they can be removed without injuring the concrete or concrete surface.

610-3.5 Placing reinforcement. All reinforcement shall be accurately placed, as shown on the plans, and shall be firmly held in position during concrete placement. Bars shall be fastened together at intersections. The reinforcement shall be supported by approved metal chairs. Shop drawings, lists, and bending details shall be supplied by Contractor when required.

610-3.6 Embedded items. Before placing concrete, all embedded items shall be firmly and securely fastened in place as indicated. All embedded items shall be clean and free from coating, rust, scale, oil, or any foreign matter. The concrete shall be spaded and consolidated around and against embedded items. The embedding of wood shall not be allowed.

610-3.7 Concrete Consistency. Contractor shall monitor the consistency of the concrete delivered to the project site; collect each batch ticket; check temperature; and perform slump tests on each truck at the project site in accordance with ASTM C143.

610-3.8 Placing concrete. All concrete shall be placed during daylight hours, unless otherwise approved. The concrete shall not be placed until the depth and condition of foundations, the adequacy of forms and falsework, and the placing of the steel reinforcing have been approved by RPR. Concrete shall be placed as soon as practical after mixing, but in no case later than one hour after water has been added to the mix. The method and manner of placing shall avoid segregation and displacement of the reinforcement. Troughs, pipes, and chutes shall be used as an aid in placing concrete when necessary. The concrete shall not be dropped from a height of more than 5 feet. Concrete shall be deposited as nearly as practical in its final position to avoid segregation due to rehandling or flowing. Do not subject concrete to procedures which cause segregation. Concrete shall be placed on clean, damp surfaces, free from running water, or on a properly consolidated soil foundation.

610-3.9 Vibration. Vibration shall follow the guidelines in American Concrete Institute (ACI) Committee 309R, Guide for Consolidation of Concrete.

610-3.10 Joints. Joints shall be constructed as indicated on the plans.

610-3.11 Finishing. All exposed concrete surfaces shall be true, smooth, and free from open or rough areas, depressions, or projections. All concrete horizontal plane surfaces shall be brought flush to the proper elevation with the finished top surface struck-off with a straightedge and floated.

610-3.12 Curing and protection. All concrete shall be properly cured in accordance with the recommendations in American Concrete Institute (ACI) 308R, Guide to External Curing of Concrete. The concrete shall be protected from damage until project acceptance.

610-3.13 Cold weather placing. When concrete is placed at temperatures below 40 degrees F, follow the cold weather concreting recommendations found in ACI 306R, Cold Weather Concreting.

610-3.14 Hot weather placing. When concrete is placed in hot weather greater than 85 degrees F, follow the hot weather concreting recommendations found in ACI 305R, Hot Weather Concreting.

QUALITY ASSURANCE (QA)

610-4.1 Quality Assurance sampling and testing. Concrete for each day's placement will be accepted on the basis of the compressive strength specified in paragraph 610-3.2. RPR will sample the concrete in accordance with ASTM C172; test the slump in accordance with ASTM C143; test air content in accordance with ASTM C231; make and cure compressive strength specimens in accordance with ASTM C31; and test in accordance with ASTM C39. The QA testing agency will meet the requirements of ASTM C1077.

Contractor shall provide adequate facilities for the initial curing of cylinders.

610-4.2 Defective work. Any defective work that cannot be satisfactorily repaired as determined by RPR, shall be removed and replaced at Contractor's expense. Defective work includes, but is not limited to, uneven dimensions, honeycombing and other voids on the surface or edges of the concrete.

METHOD OF MEASUREMENT

610-5.1 Concrete shall be measured by the number of square yards based on the dimensions shown on the plans of concrete complete in place and accepted.

BASIS OF PAYMENT

610-6.1 Payment shall be made at the contract price by the number of square yards. This price shall be full compensation for furnishing all materials including reinforcement and embedded items and for all preparation, delivery, installation, and curing of these materials, and for all labor, equipment, tools, and incidentals necessary to complete the item.

Payment will be made under:

Item P-610-6.1	Concrete Drainage Flume, 4-inch thickness - per square yard;
Item P-610-6.2	Concrete Entrance Road, 6-inch thickness - per square yard.

REFERENCES

The publications listed below form a part of this Specification to the extent referenced. The publications are referred to within the text by the basic designation only.

ASTM International (ASTM)

ASTM A184	Standard Specification for Welded Deformed Steel Bar Mats for Concrete Reinforcement
ASTM A615	Standard Specification for Deformed and Plain Carbon-Steel Bars for Concrete Reinforcement
ASTM A704	Standard Specification for Welded Steel Plain Bar or Rod Mats for Concrete Reinforcement
ASTM A706	Standard Specification for Low-Alloy Steel Deformed and Plain Bars for Concrete Reinforcement
ASTM A775	Standard Specification for Epoxy-Coated Steel Reinforcing Bars
ASTM A884	Standard Specification for Epoxy-Coated Steel Wire and Welded Wire Reinforcement
ASTM A934	Standard Specification for Epoxy-Coated Prefabricated Steel Reinforcing Bars
ASTM A1064	Standard Specification for Carbon-Steel Wire and Welded Wire Reinforcement, Plain and Deformed, for Concrete
ASTM C31	Standard Practice for Making and Curing Concrete Test Specimens in the Field
ASTM C33	Standard Specification for Concrete Aggregates
ASTM C39	Standard Test Method for Compressive Strength of Cylindrical Concrete Specimens
ASTM C94	Standard Specification for Ready-Mixed Concrete

ASTM C136	Standard Test Method for Sieve or Screen Analysis of Fine and Coarse Aggregates
ASTM C114	Standard Test Methods for Chemical Analysis of Hydraulic Cement
ASTM C136	Standard Test Method for Sieve Analysis of Fine and Coarse Aggregates
ASTM C143	Standard Test Method for Slump of Hydraulic-Cement Concrete
ASTM C150	Standard Specification for Portland Cement
ASTM C171	Standard Specification for Sheet Materials for Curing Concrete
ASTM C172	Standard Practice for Sampling Freshly Mixed Concrete
ASTM C231	Standard Test Method for Air Content of Freshly Mixed Concrete by the Pressure Method
ASTM C260	Standard Specification for Air-Entraining Admixtures for Concrete
ASTM C309	Standard Specification for Liquid Membrane-Forming Compounds for Curing Concrete
ASTM C311	Standard Test Methods for Sampling and Testing Fly Ash or Natural Pozzolans for Use in Portland-Cement Concrete
ASTM C494	Standard Specification for Chemical Admixtures for Concrete
ASTM C618	Standard Specification for Coal Fly Ash and Raw or Calcined Natural Pozzolan for Use in Concrete
ASTM C666	Standard Test Method for Resistance of Concrete to Rapid Freezing and Thawing
ASTM C685	Standard Specification for Concrete Made by Volumetric Batching and Continuous Mixing
ASTM C989	Standard Specification for Slag Cement for Use in Concrete and Mortars
ASTM C1017	Standard Specification for Chemical Admixtures for Use in Producing Flowing Concrete
ASTM C1077	Standard Practice for Agencies Testing Concrete and Concrete Aggregates for Use in Construction and Criteria for Testing Agency Evaluation
ASTM C1157	Standard Performance Specification for Hydraulic Cement
ASTM C1260	Standard Test Method for Potential Alkali Reactivity of Aggregates (Mortar-Bar Method)
ASTM C1365	Standard Test Method for Determination of the Proportion of Phases in Portland Cement and Portland-Cement Clinker Using X-Ray Powder Diffraction Analysis
ASTM C1602	Standard Specification for Mixing Water Used in the Production of Hydraulic Cement Concrete
ASTM D1751	Standard Specification for Preformed Expansion Joint Filler for Concrete Paving and Structural Construction (Nonextruding and Resilient Asphalt Types)

ASTM D1752	Standard Specification for Preformed Sponge Rubber Cork and Recycled PVC Expansion Joint Fillers for Concrete Paving and Structural Construction

American Concrete Institute (ACI)

ACI 305R	Hot Weather Concreting
ACI 306R	Cold Weather Concreting
ACI 308R	Guide to External Curing of Concrete
ACI 309R	Guide for Consolidation of Concrete

END OF ITEM P-610

Item T-901 Seeding

DESCRIPTION

901-1.1 This item shall consist of soil preparation, seeding the areas shown on the plans or as directed by RPR in accordance with these Specifications.

MATERIALS

901-2.1 Seed. The species and application rates of grass, legume, and cover-crop seed furnished shall be those stipulated herein. Seed shall conform to the requirements of Federal Specification JJJ-S-181, Federal Specification, Seeds, Agricultural.

Seed shall be furnished separately or in mixtures in standard containers labeled in conformance with the Agricultural Marketing Service (AMS) Seed Act and applicable state seed laws with the seed name, lot number, net weight, percentages of purity and of germination and hard seed, and percentage of maximum weed seed content clearly marked for each kind of seed. Contractor shall furnish RPR duplicate signed copies of a statement by the vendor certifying that each lot of seed has been tested by a recognized laboratory for seed testing within six months of date of delivery. This statement shall include: name and address of laboratory, date of test, lot number for each kind of seed, and the results of tests as to name, percentages of purity and of germination, and percentage of weed content for each kind of seed furnished, and, in case of a mixture, the proportions of each kind of seed. Wet, moldy, or otherwise damaged seed will be rejected.

Seeds shall be applied as follows:

February 1 – May 15 for Odessa (District 6)

Seed	Rate of Application lb. PLS/acre
Green Sprangletop (Van Horn)	1.0
Sideoats Grama (South Texas)	1.0
Blue Grama (Hachita)	0.4
Galleta Grass (Viva)	0.6
Shortspike Windmillgrass (Welder)	0.2
Pink Pappusgrass (Maverick)	0.6
Alkali Sacaton (Saltalk)	0.2
Plains Bristlegrass (Catarina Blend)	0.2
False Rhodes Grass (Kinney)	0.1
Whiplash Pappusgrass (Webb)	0.6
Arizona Cottontop (La Salle)	0.2

September 1 – November 30 for Odessa (District 6)

Seed	Rate of Application lb. PLS/acre
Western Wheatgrass	8.4
Wheat (Red, Winter)	50

901-2.2 Lime. Not required.

901-2.3 Fertilizer. Fertilizer shall be standard commercial fertilizers supplied separately or in mixtures containing the percentages of total nitrogen, available phosphoric acid, and water-soluble potash. They shall be applied at the rate and to the depth specified, and shall meet the requirements of applicable state laws. They shall be furnished in standard containers with name, weight, and guaranteed analysis of contents clearly marked thereon. No cyanamide compounds or hydrated lime shall be permitted in mixed fertilizers.

The fertilizers may be supplied in one of the following forms:

a. A dry, free-flowing fertilizer suitable for application by a common fertilizer spreader;

b. A finely-ground fertilizer soluble in water, suitable for application by power sprayers; or

c. A granular or pellet form suitable for application by blower equipment.

Fertilizers shall be 2-2-0 commercial fertilizer and shall be spread as follows:

Soil Fertilizer Guidelines (lbs per 1,000 square feet)

N Nitrogen	P2Ø5 Phosphate	K20 Potassium	Mg Magnesium	S Sulfur	Zn Zinc	Mn Manganese	Fe Iron	Cu Copper	B Boron
2.0	2.0		0.50		0.50	0.50		0.50	

901-2.4 Soil for repairs. The soil for fill and topsoiling of areas to be repaired shall be at least of equal quality to that which exists in areas adjacent to the area to be repaired. The soil shall be relatively free from large stones, roots, stumps, or other materials that will interfere with subsequent sowing of seed, compacting, and establishing turf, and shall be approved by RPR before being placed.

CONSTRUCTION METHODS

901-3.1 Advance preparation and cleanup. After grading of areas has been completed and before applying fertilizer and ground limestone, areas to be seeded shall be raked or otherwise cleared of stones larger than 2 inches in any diameter, sticks, stumps, and other debris that might interfere with sowing of seed, growth of grasses, or subsequent maintenance of grass-covered areas. If any damage by erosion or other causes has occurred after the completion of grading and before beginning the application of fertilizer and ground limestone, Contractor shall repair such damage include filling gullies, smoothing irregularities, and repairing other incidental damage.

An area to be seeded shall be considered a satisfactory seedbed without additional treatment if it has recently been thoroughly loosened and worked to a depth of not less than 5 inches as a result of grading operations

and, if immediately prior to seeding, the top 3 inches of soil is loose, friable, reasonably free from large clods, rocks, large roots, or other undesirable matter, and if shaped to the required grade.

When the area to be seeded is sparsely sodded, weedy, barren and unworked, or packed and hard, any grass and weeds shall first be cut or otherwise satisfactorily disposed of, and the soil then scarified or otherwise loosened to a depth not less than 5 inches. Clods shall be broken and the top 3 inches of soil shall be worked into a satisfactory seedbed by discing, or by use of cultipackers, rollers, drags, harrows, or other appropriate means.

901-3.2 Dry application method.

a. Fertilizing. Following advance preparations and cleanup fertilizer shall be uniformly spread at the rate that will provide not less than the minimum quantity stated in Paragraph 901-2.3.

c. Seeding. Grass seed shall be sown at the rate specified in Paragraph 901-2.1 immediately after fertilizing. The fertilizer and seed shall be raked within the depth range stated in the special provisions. Seeds of legumes, either alone or in mixtures, shall be inoculated before mixing or sowing, in accordance with the instructions of the manufacturer of the inoculant. When seeding is required at other than the seasons shown on the plans or in the special provisions, a cover crop shall be sown by the same methods required for grass and legume seeding.

d. Rolling. After the seed has been properly covered, the seedbed shall be immediately compacted by means of an approved lawn roller, weighing 40 to 65 pounds per foot of width for clay soil (or any soil having a tendency to pack), and weighing 150 to 200 pounds per foot of width for sandy or light soils.

901-3.3 Wet application method.

a. General. Contractor may elect to apply seed and fertilizer (and lime, if required) by spraying them on the previously prepared seedbed in the form of an aqueous mixture and by using the methods and equipment described herein. The rates of application shall be as specified in the special provisions.

b. Spraying equipment. The spraying equipment shall have a container or water tank equipped with a liquid level gauge calibrated to read in increments not larger than 50 gallons over the entire range of the tank capacity, mounted so as to be visible to the nozzle operator. The container or tank shall also be equipped with a mechanical power-driven agitator capable of keeping all the solids in the mixture in complete suspension at all times until used.

The unit shall also be equipped with a pressure pump capable of delivering 100 gallons per minute at a pressure of 100 lbs / sq inches. The pump shall be mounted in a line that will recirculate the mixture through the tank whenever it is not being sprayed from the nozzle. All pump passages and pipe lines shall be capable of providing clearance for 5/8 inch solids. The power unit for the pump and agitator shall have controls mounted so as to be accessible to the nozzle operator. There shall be an indicating pressure gauge connected and mounted immediately at the back of the nozzle.

The nozzle pipe shall be mounted on an elevated supporting stand in such a manner that it can be rotated through 360 degrees horizontally and inclined vertically from at least 20 degrees below to at least 60 degrees above the horizontal. There shall be a quick-acting, three-way control valve connecting the recirculating line to the nozzle pipe and mounted so that the nozzle operator can control and regulate the amount of flow of mixture delivered to the nozzle. At least three different types of nozzles shall be supplied so that mixtures may be properly sprayed over distance varying from 20 to 100 feet. One shall be a close-range ribbon nozzle, one a medium-range ribbon nozzle, and one a long-range jet nozzle. For case of removal and cleaning, all nozzles shall be connected to the nozzle pipe by means of quick-release couplings.

In order to reach areas inaccessible to the regular equipment, an extension hose at least 50 feet in length shall be provided to which the nozzles may be connected.

c. Mixtures. Lime, if required, shall be applied separately, in the quantity specified, prior to the fertilizing and seeding operations. Not more than 220 pounds of lime shall be added to and mixed with each 100 gallons of water. Seed and fertilizer shall be mixed together in the relative proportions specified, but not more than a total of 220 pounds of these combined solids shall be added to and mixed with each 100 gallons of water.

All water used shall be obtained from fresh water sources and shall be free from injurious chemicals and other toxic substances harmful to plant life. Contractor shall identify to RPR all sources of water at least two weeks prior to use. RPR may take samples of the water at the source or from the tank at any time and have a laboratory test the samples for chemical and saline content. Contractor shall not use any water from any source that is disapproved by RPR following such tests.

All mixtures shall be constantly agitated from the time they are mixed until they are finally applied to the seedbed. All such mixtures shall be used within two hours from the time they were mixed or they shall be wasted and disposed of at approved locations.

d. Spraying. Lime, if required, shall be sprayed only upon previously prepared seedbeds. After the applied lime mixture has dried, the lime shall be worked into the top 3 inches, after which the seedbed shall again be properly graded and dressed to a smooth finish.

Mixtures of seed and fertilizer shall only be sprayed upon previously prepared seedbeds on which the lime, if required, shall already have been worked in. The mixtures shall be applied by means of a high-pressure spray that shall always be directed upward into the air so that the mixtures will fall to the ground like rain in a uniform spray. Nozzles or sprays shall never be directed toward the ground in such a manner as might produce erosion or runoff.

Particular care shall be exercised to ensure that the application is made uniformly and at the prescribed rate and to guard against misses and overlapped areas. Proper predetermined quantities of the mixture in accordance with specifications shall be used to cover specified sections of known area.

Checks on the rate and uniformity of application may be made by observing the degree of wetting of the ground or by distributing test sheets of paper or pans over the area at intervals and observing the quantity of material deposited thereon.

On surfaces that are to be mulched as indicated by the plans or designated by RPR, seed and fertilizer applied by the spray method need not be raked into the soil or rolled. However, on surfaces on which mulch is not to be used, the raking and rolling operations will be required after the soil has dried.

901-3.4 Maintenance of seeded areas. Contractor shall protect seeded areas against traffic or other use by warning signs or barricades, as approved by RPR. Surfaces gullied or otherwise damaged following seeding shall be repaired by regrading and reseeding as directed. Contractor shall mow, water as directed, and otherwise maintain seeded areas in a satisfactory condition until final inspection and acceptance of the work.

When either the dry or wet application method outlined above is used for work done out of season, it will be required that Contractor establish a good stand of grass of uniform color and density to the satisfaction of RPR. A grass stand shall be considered adequate when bare spots are 1 square foot or less, randomly dispersed, and do not exceed 3 percent of the area seeded.

METHOD OF MEASUREMENT

901-4.1 The quantity of seeding to be paid for shall be the number of units 1,000 square feet measured on the ground surface, completed and accepted.

BASIS OF PAYMENT

901-5.1 Payment shall be made at the contract unit price per acre, which price and payment shall be full compensation for furnishing and placing all material and for all labor, equipment, tools, and incidentals necessary to complete the work prescribed in this item.

Payment will be made under:

Item 901-5.1	Seeding by Wet Method - per acre.

REFERENCES

The publications listed below form a part of this Specification to the extent referenced. The publications are referred to within the text by the basic designation only.

ASTM International (ASTM)

ASTM C602	Standard Specification for Agricultural Liming Materials

Federal Specifications (FED SPEC)

FED SPEC	JJJ-S-181, Federal Specification, Seeds, Agricultural

Advisory Circulars (AC)

AC 150/5200-33	Hazardous Wildlife Attractants on or Near Airports

FAA/United States Department of Agriculture

Wildlife Hazard Management at Airports, A Manual for Airport Personnel

END OF ITEM T-901

Item T-905 Topsoil

DESCRIPTION

905-1.1 This item shall consist of preparing the ground surface for topsoil application, removing topsoil from designated stockpiles or areas to be stripped on the site or from approved sources off the site, and placing and spreading the topsoil on prepared areas in accordance with this Specification at the locations shown on the plans or as directed by RPR.

MATERIALS

905-2.1 Topsoil. Topsoil shall be the surface layer of soil with no admixture of refuse or any material toxic to plant growth, and it shall be reasonably free from subsoil and stumps, roots, brush, stones (2 inches or more in diameter), and clay lumps or similar objects. Brush and other vegetation that will not be incorporated with the soil during handling operations shall be cut and removed. Ordinary sod and herbaceous growth such as grass and weeds are not to be removed, but shall be thoroughly broken up and intermixed with the soil during handling operations. Heavy sod or other cover, which cannot be incorporated into the topsoil by discing or other means, shall be removed. The topsoil or soil mixture, unless otherwise specified or approved, shall have a pH range of approximately 5.5-7.6 pH, when tested in accordance with the methods of testing of the Association of Official Agricultural Chemists in effect on the date of invitation of bids. The organic content shall be not less than 3 nor more than 20 percent as determined by the wet-combustion method (chromic acid reduction). There shall be not less than 20 nor more than 80 percent of the material passing the 200 mesh sieve as determined by the wash test in accordance with ASTM C117.

Natural topsoil may be amended by Contractor with approved materials and methods to meet the above specifications.

905-2.2 Inspection and tests. Within 10 days following acceptance of the bid, RPR shall be notified of the source of topsoil to be furnished by Contractor. The topsoil shall be inspected to determine if the selected soil meets the requirements specified and to determine the depth to which stripping will be permitted. At this time, Contractor may be required to take representative soil samples from several locations within the area under consideration and to the proposed stripping depths, for testing purposes as specified in Paragraph 905-2.1.

CONSTRUCTION METHODS

905-3.1 General. Areas to be topsoiled shall be shown on the plans. If topsoil is available on the site, the location of the stockpiles or areas to be stripped of topsoil and the stripping depths shall be shown on the plans.

Suitable equipment necessary for proper preparation and treatment of the ground surface, stripping of topsoil, and for the handling and placing of all required materials shall be on hand, in good condition, and approved by RPR before the various operations are started.

905-3.2 Preparing the ground surface. Immediately prior to dumping and spreading the topsoil on any area, the surface shall be loosened by discs or spike-tooth harrows, or by other means approved by RPR, to a minimum depth of 2 inches to facilitate bonding of the topsoil to the covered subgrade soil. The surface

of the area to be topsoiled shall be cleared of all stones larger than 2 inches in any diameter and all litter or other material which may be detrimental to proper bonding, the rise of capillary moisture, or the proper growth of the desired planting. Limited areas, as shown on the plans, which are too compact to respond to these operations shall receive special scarification.

Grades on the area to be topsoiled, which have been established by others as shown on the plans, shall be maintained in a true and even condition. Where grades have not been established, the areas shall be smooth-graded and the surface left at the prescribed grades in an even and compacted condition to prevent the formation of low places or pockets where water will stand.

905-3.3 Obtaining topsoil. Prior to the stripping of topsoil from designated areas, any vegetation, briars, stumps and large roots, rubbish or stones found on such areas, which may interfere with subsequent operations, shall be removed using methods approved by RPR. Heavy sod or other cover, which cannot be incorporated into the topsoil by discing or other means shall be removed.

When suitable topsoil is available on the site, Contractor shall remove this material from the designated areas and to the depth as directed by RPR. The topsoil shall be spread on areas already tilled and smooth-graded, or stockpiled in areas approved by RPR. Any topsoil stockpiled by Contractor shall be rehandled and placed without additional compensation. Any topsoil that has been stockpiled on the site by others, and is required for topsoil purposes, shall be removed and placed by Contractor. The sites of all stockpiles and areas adjacent thereto which have been disturbed by Contractor shall be graded if required and put into a condition acceptable for seeding.

When suitable topsoil is secured off the airport site, Contractor shall locate and obtain the supply, subject to the approval of RPR. Contractor shall notify RPR sufficiently in advance of operations in order that necessary measurements and tests can be made. Contractor shall remove the topsoil from approved areas and to the depth as directed. The topsoil shall be hauled to the site of the work and placed for spreading, or spread as required. Any topsoil hauled to the site of the work and stockpiled shall be rehandled and placed without additional compensation.

905-3.4 Placing topsoil. The topsoil shall be evenly spread on the prepared areas to a uniform depth of 2 inches after compaction, unless otherwise shown on the plans or stated in the special provisions. Spreading shall not be done when the ground or topsoil is frozen, excessively wet, or otherwise in a condition detrimental to the work. Spreading shall be carried on so that turfing operations can proceed with a minimum of soil preparation or tilling.

After spreading, any large, stiff clods and hard lumps shall be broken with a pulverizer or by other effective means, and all stones or rocks (2 inches or more in diameter), roots, litter, or any foreign matter shall be raked up and disposed of by Contractor. after spreading is completed, the topsoil shall be satisfactorily compacted by rolling with a cultipacker or by other means approved by RPR. The compacted topsoil surface shall conform to the required lines, grades, and cross-sections. Any topsoil or other dirt falling upon pavements as a result of hauling or handling of topsoil shall be promptly removed.

METHOD OF MEASUREMENT

905-4.1 Topsoil obtained on the site shall be measured by the number of cubic yards of topsoil measured in its original position and stripped or excavated. Topsoil stockpiled by others and removed for topsoil by Contractor shall be measured by the number of cubic yards of topsoil measured in the stockpile. Topsoil shall be measured by volume in cubic yards computed by the method of end areas.

905-4.2 Topsoil obtained off the site shall be measured by the number of cubic yards of topsoil measured in its original position and stripped or excavated. Topsoil shall be measured by volume in cubic yards computed by the method of end areas.

BASIS OF PAYMENT

905-5.1 Payment will be made at the contract unit price per cubic yard for topsoil (obtained on the site). This price shall be full compensation for furnishing all materials and for all preparation, placing, and spreading of the materials, and for all labor, equipment, tools, and incidentals necessary to complete the item.

905-5.2 Payment will be made at the contract unit price per cubic yard for topsoil (obtained off the site). This price shall be full compensation for furnishing all materials and for all preparation, placing, and spreading of the materials, and for all labor, equipment, tools, and incidentals necessary to complete the item.

Payment will be made under:

Item T-905-5.1	Topsoil (Furnished from Off the Site) - per cubic yard

REFERENCES

The publications listed below form a part of this Specification to the extent referenced. The publications are referred to within the text by the basic designation only.

ASTM International (ASTM)

ASTM C117	Materials Finer than 75 µm (No. 200) Sieve in Mineral Aggregates by Washing

Advisory Circulars (AC)

AC 150/5200-33	Hazardous Wildlife Attractants on or Near Airports

FAA/United States Department of Agriculture

Wildlife Hazard Management at Airports, A Manual for Airport Personnel

END OF ITEM T-905

ITEM MC - ROCK RIPRAP AND FILTER FABRIC

PART 1 - GENERAL

1.1 SUMMARY

A. Section includes construction of loose rock riprap on a geotextile filter layer.

1.2 SUBMITTALS

A. Provide gradation curves for riprap to be used before any rock delivery.
B. Laboratory test results for bulk specific gravity, absorption, and sodium sulfate soundness at least 30 days before delivery of any rock.
C. Name and location of rock source.
D. Submit a sample of filter cloth and manufacturer certification it meets Specification requirements.

1.3 REFERENCES

A. ASTM A975-97 - Standard Specifications for Double-Twisted Hexagonal Mesh Gabions and Rivet Mattresses (Metallic-Coated Steel Wire or Metallic-Coated Steel Wire with Polyvinyl Chloride (PVC) Coating).
B. ASTM A370-979 - Text Methods and Definitions for Mechanical Testing of Steel Products.
C. ASTM B117-97 - Salt Spray Test.
D. ASTM C88 - Standard Test Method for Soundness of Aggregates by Use of Sodium Sulfate or Magnesium Sulfate.
E. ASTM C127 - Standard Test Method for Specific Gravity and Absorption of Course Aggregate (as modified in this specification section).
F. ASTM D1242-95A – Resistance of Plastic Materials to Abrasion.
G. ASTM D1499-99 – Standard Practice for Filtered Open-Flume Carbon Arc Exposures of Plastics.
H. ASTM D2240-04 – Standard Test Method for Rubber Property-Durometer Hardness.
I. ASTM D412-98a – Standard Test Methods for Vulcanized Rubber and Thermoplastic Elastomers – Tension.
J. ASTM D746-04 – Standard Test Method for Brittleness Temperature of Plactics and Elastomers by Impact.
K. ASTM D792-00 – Standard Test Methods for Density and Specific Gravity (Relative Density) of Plastics by Displacement.
L. ASTM G152-00 – Standard Practice for Operating Open Flume Carbon Arc Light Apparatus for Exposure of Non-Metallic Materials.
M. ASTM D3786 - Hydraulic Bursting Strength of Knitted Goods and Nonwoven Fabrics: Diaphragm Bursting Strength Tester Method.
N. ASTM D4354 - Sampling of Geosynthetics for Testing.
O. ASTM D4355 - Deterioration of Geotextiles from Exposure to Ultraviolet Light and Water (Xenon-Arc Type Apparatus).
P. ASTM D4491 - Water Permeability of Geotextiles by Permittivity.
Q. ASTM D4533 - Trapezoid Tearing Strength of Geotextiles.
R. ASTM D4632 - Grab Breaking Load and Elongation of Geotextiles.
S. ASTM D4751 - Determining Apparent Opening Size of a Geotextile.
T. ASTM D4759 - Determining the Specification Conformance of Geosynthetics.

U. ASTM D4833 - Index Puncture Resistance of Geotextiles, Geomembranes, and Related Products.
V. ASTM D4873 - Identification, Storage, and Handling of Geosynthetic Rolls.
W. TEX 735-I - Sampling Construction Fabrics.
X. TEX 616-J - Testing Construction Fabrics.

PART 2 - PRODUCTS

2.1 MATERIALS

A. Rock:
1. Loose rock riprap shall be limestone or other hard, angular to round, non-erodible rock with a specific weight of 155 lbs. per cubic foot. Rock shall be well graded with diameters 4 to 8 inches.
2. Excavate, select, and handle rock from designated sources as necessary to meet quality and grading requirements herein. Rock shall conform to specified grading limits when installed.
3. Excavate, select, and handle rock riprap as necessary to meet quality and grading requirements specified. Individual rock fragments shall be dense, sound, and free from cracks, seams, and other defects conducive to accelerated weathering. Rock fragments shall be angular-to-subrounded in shape. Least dimension of individual rock fragments shall not be less than one-third greatest dimension of fragment.
4. Rock riprap shall have the following properties:
a. Bulk specific gravity (saturated surface-dry basis) not less than 2.5 when tested per ASTM C127.
b. Absorption not more than 2 percent when tested per ASTM C127.
c. Weight loss in five cycles not more than 10 percent when sodium sulfate used or 15 percent when magnesium sulfate used when tested per ASTM C88, modified as follows:
1) Test sample shall not be separated into fractions but consist of 5,000 ±300 grams of rock fragments, reasonably uniform in size and shape and weighing approximately 100 grams each, obtained by breaking rock and selecting fragments of required size.
2) After sample is dried and following completion of final test cycle and washing to remove sodium sulfate or magnesium sulfate, determine loss of weight by subtracting from original weight of sample the final weight of all fragments not broken into three or more pieces.
3) Report shall show percentage loss of weight, list sulfate solution used, and results of qualitative examination.

B. Geotextile:
1. Shall conform to Texas Department of Transportation Geotextile Performance Requirements (Type 2) and Typar 3601 non-woven, or approved equal, typical equivalent sieve opening equal to 140.
2. Fabric shall be constructed exclusively of manmade thermoplastic fibers, a nonwoven geotextile fabric, and form a mat of uniform quality.
3. Fabric fibers may be continuous and oriented in a random pattern throughout fabric.
4. Fabric shall be mildew-resistant, rot-proof, and satisfactory for use in wet soil and aggregate environment.

5. Packaging Requirements
    a. Package fabric in rolls of length and width specified.
    b. Fabric itself shall be uniformly wound onto suitable cylindrical forms or cores to aid in handling and unrolling.
    c. Each roll of fabric and form or core where rolled shall be packaged individually in a suitable sheath, wrapper or container to help protect geotextile from damage due to ultraviolet light and moisture during normal storage and handling.
6. Tagging or Labeling:
    a. Each roll shall be identified by a tag or label securely affixed outside of roll on one end. This tag or label must list the following required information (examples of each are shown in parentheses):
        1) Unique roll number, serially designated (Roll No. 31275).
        2) Manufacturer lot/control numbers, if any (Lot 290, Control 6750).
        3) Name of fabric manufacturer (Afghan Fabrics).
        4) Date of Manufacture (Jan 16, 1987).
        5) Brand name of the product (Fabriweld).
        6) Manufacturer style/catalog designation of fabric, if any (300-X).
        7) Roll width in inches (Width 150 inches).
        8) Roll length in yards (Length 100 yards).
        9) Gross weight in pounds of entire package to include fabric core, wrapping, and sheath or container identification tag, etc. (Gross 147 pounds).
        10) Tare weight in pounds of core, wrapping, sheath, or container identification tag, etc. (Tare 18 pounds).
        11) Net weight in pounds of fabric alone (Net Weight 129 pounds).

C. Obtain bedding from designated sources and select to meet quality and grading requirements herein.

D. At least 30 days before changing source of approved rock riprap, notify Engineer in writing of new sources to obtain material. Submit gradation, tests, source name, and location required and receive Engineer approval before delivery of any material from new source. Failure to obtain approval will result in rejection of source and any material delivered.

PART 3 - EXECUTION

3.1 SUBGRADE PREPARATION

A. Cut/fill and grade subgrade surfaces on which rock riprap and filter fabric are placed to lines and grades shown on Drawings. When fill to subgrade lines required, it shall consist of approved materials and conform to requirements of specified class of fill. Subgrade shall be compacted to 95-percent density, per ASTM D698, for a depth of 6 inches.

3.2 GEOTEXTILE

A. Where Drawings specify geotextile, spread filter material uniformly on prepared subgrade surfaces.

B. Sampling and Testing Requirements
   1. Take samples for testing purposes per Test Method "Tex-735-I, Sampling Construction Fabrics."
   2. Test per appropriate ASTM or Test Method "Tex-616-J, Testing Construction Fabrics."

C. Basis for Rejection:
   1. Should any individual sample selected at random from 100 rolls, or fraction thereof, fail to meet any specification requirement, reject that roll and take two additional samples, one from each of two other additional rolls selected at random from same 100-roll lot, or fraction thereof.
   2. If either two additional samples fail to comply with any portion of specification, reject entire quantity of rolls represented by that sample.

D. Installation:
   1. Subgrade Preparation: Surface underlying the geotextile shall be smooth and free of ruts or protrusions which could damage geotextile. Subgrade materials and compaction requirements shall be per Item P-152.
   2. Placement: Request presence of Engineer during handling and installation. Repair or replace geotextile rolls damaged or contain imperfections as directed. Lay geotextile flat and smooth so it is in direct contact with subgrade. Geotextile shall also be free of tensile stresses, folds, and wrinkles.
   3. Continuously overlap geotextile panels minimum 12 inches. Contractor has option of field sewing instead of overlapping.
   4. Extend filter fabric up edge of adjacent structure or excavation to anchor fabric and prevent undermining from occurring around concrete portions of structure.
   5. Protect geotextile during installation from clogging, tears, and other damage. shall Repair or replace damaged geotextile as directed. Use adequate ballast (sand bags) to prevent uplift by wind. DO NOT leave geotextile uncovered more than 14 days during installation.
   6. Repair geotextile damaged during installation by placing a patch of same type of geotextile extending 12 inches minimum beyond edge of damage/defect. Continuously fasten patches using sewn seam or other approved method. Align machine direction of patch with machine direction of geotextile repaired. Replace geotextile which cannot be repaired.
   7. DO NOT cover geotextile before Engineer approval. Request presence of Engineer during covering of geotextile.

3.3 MEASUREMENT

A. Measure loose rock riprap based on cubic yardage of rock placed. No separate measurement made for excavation or filter fabric, as both items are incidental to cost of rock.

3.4 PAVEMENT

A. Price for this item shall consist of all labor, equipment, materials, supplies, superintendence, and all incidentals necessary to fully construct loose rock riprap.

PART 4 - PAYMENT

A. Payment will be made under:
   1. Item MC – Rock Riprap and Filter Fabric, complete in place, per square foot.

END OF SECTION

PACKET 9.207 July 11, 2023

Item 247
Flexible Base

1. DESCRIPTION

Construct a foundation course composed of flexible base.

2. MATERIALS

Furnish uncontaminated materials of uniform quality that meet the requirements of the Plans and Specifications. Notify Engineer of the proposed material sources and of changes to material sources. Engineer may sample and test project materials at any time before compaction throughout the duration of the project to assure specification compliance. Use Tex-100-E material definitions.

2.1. Aggregate. Furnish aggregate of the type and grade shown on the plans and meeting the requirements of Table 1. Each source must meet Table 1 requirements for liquid limit, plasticity index, and wet ball mill for the grade specified. Do not use additives, such as but not limited to lime, cement, or fly ash to modify aggregates to meet the requirements of Table 1 unless shown on the plans.

Table 1
Material Requirements

Property	Test Method	Grade 1 2			
Sampling	Tex-400-A				
Master gradation sieve size (cumulative % retained)	Tex-110-E				
2-1/2"		0			
1-3/4"		0–10			
7/8"		10–35			
3/8"		30–65			
#4		45–75			
#40		65–90			
Liquid Limit, % Max	Tex-104-E	40			
Plasticity Index, Max[1]	Tex-106-E	10			
Plasticity index, Min[1]		As shown on the plans			
Wet ball mill, % Max	Tex-116-E	40			
Wet ball mill, % Max increase passing the #40 sieve		20			
Min compressive strength, psi	Tex-117-E				
lateral pressure 0 psi		35			
lateral pressure 3 psi		–			
lateral pressure 15 psi		175			

1. Determine plastic index in accordance with Tex-107-E (linear shrinkage) when liquid limit is unattainable as defined in Tex-104-E.

Quality Control. The following list will be a guideline for the number of tests required for a sequence of construction.
Engineer shall direct required tests and reserves the right to adjust, modify, or waive required test.
Base Material. Retest gradation, liquid limits, and plasticity index, for each 10,000 square yards of base material laid.

2.1.1. Material Tolerances. Engineer may accept material if no more than 1 of the 5 most recent gradation tests has an individual sieve outside the specified limits of the gradation.
When target grading is required by the plans, no single failing test may exceed the master grading by more than 5 percentage points on sieves No. 4 and larger or 3 percentage points on sieves smaller than No. 4.

Engineer may accept material if no more than 1 of the 5 most recent plasticity index tests is outside the specified limit. No single failing test may exceed the allowable limit by more than 2 points.

2.1.2. Material Types. Do not use fillers or binders unless approved. Furnish the type specified on the plans in accordance with the following:

2.1.2.1. Type A. Crushed stone produced and graded from oversize quarried aggregate that originates from a single, naturally occurring source. Do not use gravel or multiple sources.

2.1.2.2. Type B. Crushed or uncrushed gravel. Blending of 2 or more sources is allowed.

2.1.2.3. Type C. Crushed gravel with a minimum of 60 percent of the particles retained on a No. 4 sieve with 2 or more crushed faces as determined by Tex-460-A, Part I. Blending of 2 or more sources is allowed.

2.1.2.4. Type D. Type A material or crushed concrete. Crushed concrete containing gravel will be considered Type D material. Crushed concrete must meet the requirements in Section 247.2.1.3.2., "Recycled Material (Including Crushed Concrete) Requirements," and be managed in a way to provide for uniform quality.

2.1.2.5. Type E. Caliche, iron ore or as otherwise shown on the plans. Engineer may require separate dedicated stockpiles in order to verify compliance.

2.1.3. Recycled Material. Reclaimed asphalt pavement (RAP) and other recycled materials may be used when shown on the plans. Request approval to blend 2 or more sources of recycled materials.

2.1.3.1. Limits on Percentage. Do not exceed 20 percent RAP by weight, when RAP is allowed, unless otherwise shown on the plans. The percentage limitations for other recycled materials will be as shown on the plans.

2.1.3.2. Recycled Material (Including Crushed Concrete) Requirements.

2.1.3.2.1. Contractor-Furnished Recycled Materials. Provide recycled materials, other than RAP, that have a maximum sulfate content of 3,000 ppm when tested in accordance with Tex-145-E. When Contractor furnishes the recycled materials, including crushed concrete, the final product will be subject to the requirements of Table 1 for the grade specified. Certify compliance with DMS-11000, "Evaluating and Using Nonhazardous Recyclable Materials Guidelines," for Contractor furnished recycled materials. In addition, recycled materials must be free from reinforcing steel and other objectionable material and have at most 1.5% deleterious material.

2.1.3.2.2. Owner-Furnished Required Recycled Materials. When the Owner furnishes and requires the use of recycled materials, unless otherwise shown on the plans:

- Owner-required recycled material will not be subject to the requirements in Table 1, when tested in accordance with Tex-413-A. For RAP, do not exceed a maximum percent loss from decantation of 5.0% when tested in accordance with Tex-406-A. Test RAP without removing the asphalt.
- Contractor-furnished materials are subject to the requirements in Table 1 and this Item, the final product, blended, will be subject to the requirements in Table 1, and
- for final product, unblended (100 percent Owner-furnished required recycled material), the liquid limit, plasticity index, wet ball mill, and compressive strength is waived.

Crush Owner-furnished RAP so that 100 percent passes the 2 in. sieve. Contractor is responsible for uniformly blending to meet the percentage required.

2.1.3.2.3. Owner-Furnished and Allowed Recycled Materials. When Owner furnishes and allows the use of recycled materials or allows Contractor to furnish recycled materials, the final blended product is subject to the requirements of Table 1 and the plans.

2.1.3.3. Recycled Material Sources. Owner recycled material is available to Contractor only when shown on the plans.
Return unused Owner recycled materials to Owner stockpile location designated by Engineer unless otherwise shown on the plans.
The use of Contractor-owned recycled materials is allowed when shown on the plans. Contractor-owned surplus recycled materials remain the property of Contractor. Remove Contractor-owned recycled materials from the project and dispose of them in accordance with federal, state, and local regulations before project acceptance. Do not stockpile Contractor-owned recycled material with Owner-owned recycled material unless approved.

2.2. Water. Furnish water free of industrial wastes and other objectionable matter.

2.3. Material Sources. Expose the vertical faces of all strata of material proposed for use when non-commercial sources are used. Secure and process the material by successive vertical cuts extending through all exposed strata, when directed.

3. EQUIPMENT

Provide machinery, tools, and equipment necessary for proper execution of the work.

3.1. Provide rollers in accordance with Item 210, “Rolling.” Provide proof rollers in accordance with Item 216, “Proof Rolling,” when required.

3.2. When ride quality measurement is required, provide a high speed or lightweight inertial profiler certified at the Texas A&M Transportation Institute. Provide equipment certification documentation. Display a current decal on the equipment indicating the certification expiration date.

4. CONSTRUCTION

Construct each layer uniformly, free of loose or segregated areas, and with the required density and moisture content. Provide a smooth surface that conforms to the typical sections, lines, and grades shown on the plans
Stockpile base material temporarily at an approved location before delivery to the roadway. Build stockpiles in layers no greater than 2 ft. thick. Stockpiles must have a total height between 10 and 16 ft. unless otherwise approved. After construction and acceptance of the stockpile, loading from the stockpile for delivery is allowed.
Do not add or remove material from temporary stockpiles that require sampling and testing before delivery unless otherwise approved. Charges for additional sampling and testing required as a result of adding or removing material will be deducted from Contractor’s estimated quantity.
Haul approved flexible base in clean trucks. Deliver the required quantity to each 100-ft. station or designated stockpile site as shown on the plans. Prepare stockpile sites as directed. When delivery is to the 100-ft. station, manipulate to conform to the typical sections shown on the plans or as directed.

4.1. Preparation of Subgrade or Existing Base. Remove or scarify existing asphalt concrete pavement in accordance with Item P-101 “Surface Preparation” when shown on the plans or as directed. Shape the subgrade or existing base to conform to the typical sections shown on the plans or as directed.
When new base is required to be mixed with existing base, deliver, place, and spread the new flexible base in the required amount per station. Manipulate and thoroughly mix the new base with existing material to provide a uniform mixture to the specified depth before shaping.

Proof roll the roadbed in accordance with Item 216, “Proof Rolling,” before pulverizing or scarifying when shown
on the plans or directed. Correct soft spots as directed.

4.2. Placing. Spread and shape flexible base into a uniform layer with an approved spreader the same day as
delivered unless otherwise approved. Construct layers to the thickness shown on the plans. Maintain the shape
of the course. Control dust by sprinkling, as directed. Correct or replace segregated areas as directed at no
additional expense to the Owner.

Place successive base courses and finish courses using the same construction methods required for the first
course.

Upon completion, the finished base shall conform with the typical section shown on plans and established lines
and grades. Contractor should avoid overworking base course and working excess fines to the top of finished
surface. If this occurs, Contractor will be required to remove excess fines by power brooming or other
mechanical means before placing prime coat.

4.3. Compaction. Compact using density control unless otherwise shown on the plans. Multiple lifts are permitted
when shown on the plans or approved. Bring each layer to the moisture content directed. When necessary,
sprinkle the material in accordance with Item 204, “Sprinkling.”

Begin rolling longitudinally at the sides and progress toward the center, overlapping on successive trips by at
least 1/2 the width of the roller unit. Begin rolling at the low side and progress toward the high side on super-
elevated curves. Offset alternate trips of the roller. Operate rollers at a speed not to exceed 3 mph, or as
directed.

Before final acceptance, Engineer will select the location of tests and measure the flexible base depth in
accordance with Tex-140-E. Correct areas deficient by more than 1/2-inch in thickness by scarifying, adding
material as required, reshaping, recompacting, and refinishing at Contractor's expense.

4.3.1. Ordinary Compaction. Ordinary compaction is not intended for this project. If needed, roll with approved
compaction equipment as directed. Correct irregularities, depressions, and weak spots immediately by
scarifying the affected areas, adding or removing material as required, reshaping, and recompacting.

4.3.2. Density Control. Compact to at least 100 percent of the maximum dry density determined by Tex-113-E
unless otherwise shown on the plans. Maintain moisture during compaction within ±2 percentage points of the
optimum moisture content as determined by Tex-113-E. Measure the moisture content of the material in
accordance with Tex-115-E or Tex-103-E during compaction daily and report the results the same day to the
Engineer.

The Engineer will determine roadway density and moisture content of completed sections in accordance with
Tex-115-E or Tex-113-E. The Engineer may accept the section if no more than 1 of the 5 most recent density tests is below the specified density and the failing test is no more than 3 pcf below the specified density.

Density tests will be taken at one test per installation area in the patch areas and one test per 200 square
yards.

4.4. Finishing. After completing compaction, clip, skin, or tight-blade the surface with a maintainer or subgrade
trimmer to a depth of approximately 1/4-inch. Remove loosened material and dispose of it at an approved
location. Seal the clipped surface immediately by rolling with a pneumatic tire roller until a smooth surface is
attained. Add small increments of water as needed during rolling. Shape and maintain the course and surface
in conformity with the typical sections, lines, and grades as shown on the plans or as directed.

Correct grade deviations greater than 1/4-inch in 16 feet measured longitudinally or greater than 1/4-inch over
the entire width of the cross-section in areas where surfacing is to be placed. Correct by loosening and adding,
removing, replacing, and recompacting material, and shaping in accordance with Section 247.4.3, "Compaction."

4.5. Curing. Cure the finished section until the moisture content is at least 2 percentage points below optimum or
as directed before applying the next successive course or prime coat.

4.6. Ride Quality. This section applies to the final travel lanes that receive a 1 or 2 course surface treatment for
the final surface, unless otherwise shown on the plans. Measure ride quality of the base course after placement
of the prime coat and before placement of the surface treatment, unless otherwise approved. Use a certified
profilograph operated by the Owner's personnel. Provide profile measurements to Engineer in electronic data files within 3 days after placement of the prime
coat using the format specified in Tex-1001-S. Engineer will use Owner software to evaluate longitudinal
profiles to determine areas requiring corrective action. Correct 0.1-mi.sections having an average international
Roughness Index (IRI) value greater than 100.0 in. per mile or an individual IRI value of 100.0 in. per mile or less
for each wheel path, unless otherwise shown on the plans.

Correct re-profiled sections until specification requirements are met, as approved. Perform this work at no
additional expense to the Owner.

5. MEASUREMENT

Flexible base will be measured as follows:

Item 247-6.1 Flexible Base, Grade 1-2, Type A, B, C, D or E, 6-inch thickness, (Complete In Place) per
square yard.

Measurement is further defined for payment as follows.

5.1. Square Yard. By the square yard of surface area in the completed and accepted final position. The surface
area of the base course is based on the width of flexible base as shown on the plans. No measurement
will be made for thickness or width exceeding that shown on the typical section or provided on the plans for
the item unless otherwise shown on the plans.

5.2. Ton. By the ton of dry weight in trucks as delivered. The dry weight is determined by deducting the weight
of the moisture in the material at the time of weighing from the gross weight of the material. Engineer will
determine the moisture content in the material in accordance with Tex-103-E from samples taken at the time
of weighing.

When material is measured in trucks, the weight of the material will be determined on certified scales or
Contractor must provide a set of standard platform truck scales at a location approved by Engineer. Scales
must conform to the requirements of Item 520, "Weighing and Measuring Equipment."

6. PAYMENT

The work performed and materials furnished in accordance with this Item and measured as provided under
"Measurement" will be paid for at the unit price bid for the types of work shown below. No additional payment
will be made for thickness or width exceeding that shown on the typical section or provided on the plans for
the item unless otherwise shown on the plans.

Sprinkling and rolling, except proof rolling, will not be paid for directly but will be subsidiary to this item.

Tons delivered in the final position or square yard measurement.

Where subgrade is constructed under this Contract, correction of soft spots in the subgrade will be at
Contractor's expense. Where subgrade is not constructed under this Contract, correction of soft spots in the
subgrade will be paid in accordance with Item 4, Items not Listed in the Bid Schedule, or Article 4.4, "Changes in the Work."

6.1. Flexible Base (Grade 1-2, Type A, B, C, D or E). Payment shall be made at the Contract unit price per square
yard for 6-inch flexible base constructed in one 6-inch lift. Price shall be full compensation for securing and
furnishing all materials, including royalty and freight involved; furnishing scales and labor involved in weighing
material when required; loading all materials; all hauling, delivering, and manipulations; sprinkling; rolling;
sprinkling for dust control; shaping and fine grading; spreading, mining, blading, compacting, shaping, finishing;
and curing base material; labor, tools and incidentals necessary to complete Work.

Payment will be made under:

TxDOT Item 247-6.1, Flexible Base, Grade 1-2, Type A, B, C, D or E, installed in one 6-inch lift, furnished and installed, complete, per square yard.

APPENDIX A

CONSTRUCTION SAFETY AND PHASING PLAN

Parkhill

Midland International Air & Space Port

CONSTRUCTION SAFETY AND PHASING PLAN (CSPP)

Midland Air & Space Port (MAF)

Northwest Basin Wildlife Improvements
Midland, Texas

PACKET 9.215 July 11, 2023

June | 2023
Parkhill Project #01976818

Parkhill

Midland International Air & Space Port

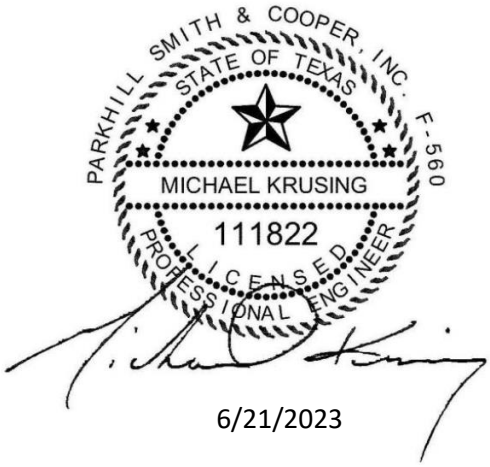

CONSTRUCTION SAFETY AND PHASING PLAN (CSPP)

Midland Air & Space Port (MAF)

Northwest Basin Wildlife Improvements
Midland, Texas

June | 2023
Parkhill Project #01976818

TABLE OF CONTENTS

1. COORDINATION 1
2. PHASING 2
3. AREAS/OPERATIONS AFFECTED BY CONSTRUCTION 2
4. NAVIGATION AID (NAVAID) PROTECTION 2
5. CONTRACTOR ACCESS 3
6. WILDLIFE MANAGEMENT 5
7. FOREIGN OBJECT DEBRIS (FOD) MANAGEMENT 6
8. HAZARDOUS MATERIALS (HAZMAT) MANAGEMENT 6
9. CONSTRUCTION ACTIVITY NOTIFICATIONS 6
10. INSPECTION REQUIREMENTS 8
11. UNDERGROUND UTILITIES 8
12. PENALTIES 8
13. SPECIAL CONDITIONS 8
14. RUNWAY AND TAXIWAY VISUAL AIDS 9
15. MARKING AND SIGNS 9
16. HAZARD MARKING AND LIGHTING 9
17. WORK ZONE LIGHTING FOR NIGHT CONSTRUCTION 10
18. PROTECTION 10
19. OTHER CONSTRUCTION LIMITATIONS 11

APPENDICES

APPENDIX A: CONSTRUCTION SAFETY AND PHASING PLAN AND DETAILS
APPENDIX B: FAA FORM 7460-1, NOTICE OF PROPOSED CONSTRUCTION OR ALTERATION (BLANK)
APPENDIX C: ADVISORY CIRCULAR 150/5370-2G, OPERATIONAL SAFETY ON AIRPORTS DURING CONSTRUCTION
APPENDIX D: FAA CSPP REVIEW CHECKLIST

Project Name: MAF Northwest Basin Wildlife Improvements

Sponsor's Agent:

Justin Ruff, Director of Airports
City of Midland, Texas
PO Box 60305
Midland Texas 79711
432.560.2200 x3010

Aaron Easton, Deputy Director of Airports
City of Midland, Texas
PO Box 60305
Midland Texas 79711
432.560.2200 x3010

Consultant/Engineer:

Danny Winchester, PE, Project Manager
Parkhill
1700 West Wall Street Suite 100
Midland Texas 79701
432.697.1447

Michael Krusing, P.E., Project Engineer
Parkhill
4222 85th Street
Lubbock Texas 79423
806.432.2200

Grant/Project Numbers: FAA AIP No.: 3-48-0150-070-2023

Engineer's Project No.: 01976818 | 76818

1. COORDINATION

A. PROJECT MEETINGS

Predesign Conference. A Predesign Conference was held between Midland International Air & Space Port (MAF) staff and Parkhill personnel. Items discussed included Project scope, phasing, design, schedule, survey, unique Project elements/areas of potential concern, and utilities.

Prebid Conference. A Prebid Conference in accordance with FAA AC 150/5300-9B will be held for Consulting Engineer, MAF, and FAA to discuss Project details and allow contractors to ask Project-specific questions. Prebid Conference will be led by MAF with assistance from Parkhill.

Preconstruction Meeting. A Preconstruction Meeting, in accordance with FAA AC 150/5370-12B, will be held before issuance of Notice to Proceed. At minimum, required attendees will be MAF, Consulting Engineer, Resident Project Representative (RPR), Prime Contractor, and all subcontractors.

Construction Progress Meetings. Construction progress meetings will be held throughout Project duration, typically monthly. At minimum, required attendees will be Airport administrative staff, Consulting Engineer, RPR, Prime Contractor, and all subcontractors performing work during the current period. Construction phasing and safety will be a standing item at all construction progress meetings. Other ongoing agenda items will include:

- Project Schedule
- Safety/Security
- Project Coordination
- Construction Issues
- Submittals Review
- Request for Information (RFI) Review
- Change Orders Review

- Environmental Issues
- Quality Assurance (Test Reports)
- Record Drawings
- Pay Application Review
- General Discussion

Consulting Engineer will prepare and distribute meeting minutes for all meetings.

B. SCOPE

Regrading basin as shown on Plans, new concrete entrance road, and drainage structure improvements.

Any changes in Project Scope will require a revision to the CSPP, which must be approved by MAF and FAA.

C. FAA AIR TRAFFIC CONTROL TOWER (ATCT) COORDINATION

MAF Operations shall coordinate communication with MAF Air Traffic Control Tower (ATCT). FAA ATCT personnel will be invited to preconstruction and construction progress meetings to discuss construction schedule and Project phasing. Before any Project construction phase beginning or ending, a meeting to discuss pavement closure or ending shall be attended by MAF Operation staff, Consulting Engineer, FAA Regional ADO representative, FAA ATCT personnel, Contractor, etc.

2. PHASING

Refer to Phasing Plans included in Appendix A for limits of each phase.

A. BID PACKAGE (90 CALENDAR DAYS TOTAL)

- Phase 1 (90 Calendar Days)
- Construction Phasing Drawings may be reviewed in Appendix A.

B. PROJECT SCHEDULE

Contractor must submit a Project Schedule and Phasing Plan at/before preconstruction meeting. Any changes made to Project Schedule or Phasing will require a revision to CSPP which must be approved by MAF and FAA.

3. AREAS/OPERATIONS AFFECTED BY CONSTRUCTION

No protected surfaces will be affected by construction for this Project.

4. NAVIGATION AID (NAVAID) PROTECTION

A. NAVAIDS IN CLOSE PROXIMITY TO WORK AREA

No NAVAIDs are near work area; therefore, no physical impact to any NAVAIDs is anticipated.

5. CONTRACTOR ACCESS

A. GENERAL

Airport security is a vital part of Contractor responsibility during the Project. Contractor and employees, subcontractors, suppliers, and representatives shall always follow security guidelines, rules, and regulations of MAF and the Transportation Security Administration (TSA) during Project execution. Contractor is directly responsible for all fines or penalties levied against MAF as a result of any breach of security or safety caused by Contractor or employees, suppliers, subcontractors, or representatives.

B. AIRPORT OPERATIONS AREA (AOA)

Airport Operations Area (AOA) is any portion of the Airport property normally secured against unauthorized entry. AOA includes all areas specifically reserved for aircraft operations, support equipment, and personnel. Generally, AOA boundaries are Airport outer security fencing and any building that forms part of secured perimeter. When necessary to cross pavement surface on airfield, Contractor shall daily inspect all paved surfaces for Foreign Object Debris (FOD) and before reopening pavement surface to air traffic. Final inspection shall be by MAF Operations. Contractor shall never leave opening in secure fence.

C. MAF SECURITY BADGES

Contractor is responsible for obtaining a photo-identification security badge issued by MAF Operations for each supervisor or foreman of every work crew working within AOA. Contractor shall obtain MAF Operations security badges for at least one member of each work crew working in separate areas of AOA. All individuals responsible to the Contractor, including employees, subcontractors, suppliers, or representatives, obtain and display a MAF Operations security badge, or are directly escorted/supervised by an individual displaying a current MAF Operations security badge.

Contractor may obtain MAF security badges from MAF Operations Department. MAF Operations reserves the right to limit the number of security badges issued to Contractor. MAF Operations will charge Contractor for each security badge issued. Fingerprint verification will be an additional cost. Total cost is covered by Contractor and not refundable. An additional fee will be charged for lost or destroyed badges.

MAF Operations security badges shall always be worn and easily visible while working within the AOA. Badge holder shall be familiar with and obey all regulations, security, and safety rules. MAF Operations security badge may be confiscated, and all security rights revoked by MAF Operations upon breach of any security or safety regulations at Operation discretion. MAF Operations badge holder shall surrender badge at Project completion, transfer or termination of employment, or any time at MAF Operations request.

MAF shall conduct a background check of each applicant for an MAF Operations security badge. Contractor is responsible for completing required forms and submitting to MAF Operations for review as early in the Project as possible to avoid construction delays. Forms for completing required background checks are available through MAF Operations after Project award. MAF Operations shall be responsible for reviewing background checks. Only persons whose application is approved by MAF Operations, are issued security badges. MAF Operations reserves the right to bar anyone from the AOA found by background check to be, in the opinion of MAF Operations, a risk to AOA security or safety.

At Project completion, Contractor shall return all MAF Operations-issued security badges to MAF Operations. MAF Operations will charge an additional fee for each lost or destroyed MAF Operations-issued security badge. All MAF Operations-issued security badges must be accounted for and surrendered at Project completion. Failure to account for and surrender all MAF Operations-issued security badges will constitute grounds for withholding retainage from final pay estimate amount.

D. CONTRACTOR'S ENTRANCE GATE

Adjacent to Contractor entrance gate outside AOA, Contractor shall provide a parking area for employee's personal automobiles. Engineer directs limits of this parking/storage area. At Project completion, any damage done by Contractor to this area shall be repaired to Engineer satisfaction at no additional cost to Owner. Repairs shall include but not limited to regrading, reseeding, and/or repaving any damaged areas.

Contractor is responsible for and shall control all movement through Contractor entrance gate. Only authorized personnel and vehicles are allowed to enter AOA through this gate. Pedestrian walkthroughs are not allowed through vehicular gate. When not in immediate use, Contractor shall securely lock gate to prevent entrance by unauthorized persons or vehicles. Upon request, Contractor shall provide Director of Aviation and MAF Operations with duplicate keys (for key locks) or combinations (for combination locks) to lock(s) used to secure Contractor entrance gate to AOA.

If construction activities, such as hauling materials, require Contractor entrance gate to AOA remain open for long periods, Contractor may, upon MAF Operations approval, leave gate open and provide a full-time watchguard at the gate. Watchguard shall be approved for and possess an MAF Operations-issued security badge. If this security arrangement is desired and approved, gate shall be manned by a watchguard while gate remains open. Watchguard shall be a Contractor representative and responsible for all movement through gate. Again, only authorized persons and vehicles are allowed by Contractor's watchguard to enter AOA.

E. CONTRACTOR'S PLANT SITE, STORAGE, AND OFFICE AREA

Contractor is held completely responsible for any damage or deterioration in areas allowed for Contractor use as well as for maintenance and dust control for Project duration.

Direct negotiation may be conducted with Director of Aviation for any areas desired. Areas used by Contractor may be subject to rental rates and fees as Director of Aviation identifies.

Contractor shall completely restore, at own expense, areas occupied including but not limited to regrading disturbed areas, complete removal of debris, or any other material Contractor brings onto site, as well as complete replacement of topsoil, turf, asphalt pavement, concrete slabs, or drives, etc. that were worn, deteriorated, or damaged while Contractor and forces occupied area. All restoration shall be to Director of Aviation's satisfaction.

Prior to moving into an unpaved area, Contractor shall clear and grub as well as remove and stockpile a minimum 6 inches of existing topsoil. After Project completion and clearing site of materials, equipment, and debris, Contractor shall replace, spread, and grade salvaged topsoil, followed by seeding and fertilizing.

All restoration activities shall be accomplished per applicable Technical Specifications.

No direct payment will be made to Contractor for preparing or restoring plant site haul routes, storage, or office areas.

For all projects with an onsite concrete or hot-mix asphalt batch plant, and for projects involving pug-mill produced material, a concrete or asphalt paved material stockpile area is required. Stockpile all materials to incorporate into concrete, hot mix, cement-treated base (CTB), or other similar material on a specially prepared concrete or asphalt pad so stockpile contamination does not occur. Stockpile area shall be restored to pre-Project conditions

F. VEHICLE ESCORT

All vehicles responsible to Contractor entering AOA, (supplier vehicles, etc.), shall be escorted by an approved Contractor escort vehicle from point of AOA entry to construction site. Escort vehicle shall be clearly identified with standard FAA specified markings and/or flags ans well as marked with Contractor name.

Escort vehicle is responsible for leading supply, delivery, or other vehicles across active airfield. To facilitate safe movement of escort vehicle and escorted vehicles, driver of escort vehicle shall be approved for, issued, and display an MAF Operations security badge. Further, escort vehicle driver shall be familiar with MAF security and safety procedures.

G. CHALLENGING UNAUTHORIZED PERSONNEL OR VEHICLES:

Contractor and employees, subcontractors, suppliers, and representatives who are issued an MAF Operations security badge, are responsible for challenging any person/vehicle found on AOA or other non-public area who does not display, cannot produce a valid MAF Operations security badge, or is not under escort or direct supervision of a person possessing a valid MAF Operations security badge. Advise the person he/she is within a restricted area and inform of an appropriate exit route. Should unauthorized person refuse to exit restricted area, immediately notifiy MAF Operations for further action and keep unauthorized person under surveillance until MAF Operations arrives.

Any expired or altered badge or badge bearing a photograph not matching bearer shall be brought to the attention of MAF Operations and immediately confiscated by MAF Operations or Airport Police.

H. CONTRACTOR'S SAFETY PLAN (CSP)

Contractor is required to submit a Construction Safety Plan (CSP) as part of the submittal process before construction. Always adhere to CSP. MAF reserves the right to have Contractor amend CSP at any time if concerns arise.

Escort vehicle will be responsible for leading supply, delivery, or other vehicles across active airfield. To facilitate safe movement of escort and escorted vehicles, escort vehicle driver shall be approved for, issued, and display an MAF security badge. Further, escort vehicle driver shall be familiar with airport security and safety procedures. Escort vehicle shall be equipped with FAA radio (see Article 5.I - Two-Way Radio Communications). Driver of escort vehicle shall be familiar with FAA radio, operation, and obey all instructions from Air Traffic Control Tower.

I. TWO-WAY RADIO COMMUNICATIONS

MAF does not permit Contractor to contact ATCT; therefore, Contractor will not be required to have two-way radios. Communication will be through MAF Operations staff.

6. WILDLIFE MANAGEMENT

A. TRASH

Contractor must dispose all trash in a covered trash can or other method, not allowing trash to become a hazard or animal attractant.

B. STANDING WATER

Contractor shall minimize standing water.

C. TALL GRASS AND SEEDS

Contractor must maintain construction area grass to height required by MAF.

D. POORLY MAINTAINED FENCING AND GATES

Contractor shall maintain any fencing or gates in good condition, proper working order, and gap under fence or gate shall not exceed 3 inches.

E. DISRUPTION OF EXISTING WILDLIFE HABITAT

In event of wildlife habitat, Contractor will immediately notify MAF and Engineer.

7. FOREIGN OBJECT DEBRIS (FOD) MANAGEMENT

Contractor shall train and emphasize to construction site employees the need for continuous Foreign Object Debris (FOD) checks on or near active airfield pavement.

Contractor must conduct FOD checks before and after each construction shift at a minimum and monitor nearby active pavements throughout construction shift.

8. HAZARDOUS MATERIALS (HAZMAT) MANAGEMENT

Hazardous materials will be handled and stored per latest revision to FAA Advisory Circular 150/5370-2G - Operational Safety on Airports during Construction. Contractor must be prepared to immediately contain and clean spills resulting from fuel, oil, petroleum products, or hydraulic fluid leaks. Transportation and handling of other hazardous materials on Airport requires additional special procedures as addressed in latest revisions to FAA Advisory Circular 150/5320-15A - Management of Airport Industrial Waste. All spills must be immediately reported to MAF Operations.

9. CONSTRUCTION ACTIVITY NOTIFICATIONS

A. RESPONSIBLE REPRESENTATIVES / POINTS OF CONTACT

MAF

Name	Position	Phone
Aaron Easton	Deputy Director of Airports	432.560.2200 x3010
Nick Krakovec	Airport Operations Supervisor	432.560.2200 x3006

Parkhill, Engineer/Consultant

Name	Position	Phone
Danny Winchester, P.E.	Project Manager	432.697.1447
Michael Krusing, P.E.	Project Engineer	806.473.3671

TBD, Quality Assurance Testing

Name	Position	Phone

***** Insert Contractor and subcontractor personnel information upon Project award. *****

_____, Contractor

Name	Position/Trade	Phone

_____, Subcontractor

Name	Position/Trade	Phone

_____, Subcontractor

Name	Position/Trade	Phone

B. NOTICES TO AIRMEN (NOTAM)

MAF is responsible for issuing any Notice to Airmen (NOTAM) required before Project begins, as Project progresses, and will cancel NOTAMs at completion of intermediate construction phases of Project, as required. Contractor shall closely coordinate anticipated and required NOTAMs with MAF and provide MAF at least 72 hours' notice of necessary NOTAMs.

C. EMERGENCY NOTIFICATION PROCEDURES

In case of emergency, Contractor shall immediately call 911 first, then MAF Operations, then Engineer.

D. AIRCRAFT RESCUE AND FIREFIGHTING (ARFF) NOTIFICATIONS

During airport emergencies, all ARFF vehicles always have the immediate right of-way and may traverse any and all known roadways throughout airfield. Contractor, subcontractors, and suppliers shall immediately yield right-of-way to all Airport ARFF personnel and equipment.

Owner and Engineer shall be notified in writing at least 72 hours in advance if water lines or fire hydrants are out of service. 72-hour advance notification shall also be provided prior to performing any work that may close or affect an emergency rescue and firefighting route.

MAF Administration/Operations will communicate with MAF ARFF as needed to ensure MAF ARFF remain aware of construction activities.

E. FAA NOTIFICATION

Contractor will notify Consulting Engineer and MAF 72 hours in advance of any workaround NAVAIDs or shutdowns affecting NAVAIDs owned by FAA. Contractor shall notify NAVAIDs owned by a separate party 72 hours in advance of any workaround or shutdowns of NAVAIDs.

10. INSPECTION REQUIREMENTS

A. DAILY INSPECTIONS

Contractor shall perform daily safety, security, and phasing inspections to ensure CSPP compliance. Document inspections in Contractor's Daily Logs/Quality Control Logs.

Contractor is required to submit a Quality Control Plan (QCP) for Owner or designated representative review before any construction. QCP will address specific requirements for inspection of individual specification/pay items including test method, sampling point, testing frequency for each item, and proposed remediation action for each item if it does not meet Specification requirements. QCP will also provide direction on developing inspection reports and what to include. QCP will likely be developed in whole or in conjunction with selected Quality Control firm. QCP shall include and address Construction Management Plan (CMP) requirement.

B. FINAL INSPECTIONS

MAF will perform final safety inspection before opening any airfield pavement to aircraft.

11. UNDERGROUND UTILITIES

Contractor shall locate, mark, and protect all utilities and infrastructure during construction. Location of utilities shall include notification of Texas One Call system, as well as coordination with MAF.

12. PENALTIES

If Contractor is, at Engineer and MAF discretion, continuously negligent towards construction site safety, or refuses to comply with safety requirements, Contractor access to airfield may be suspended until Contractor complies. No reimbursement for delay will be granted under this circumstance. This would include negligence towards FOD control.

13. SPECIAL CONDITIONS

A. FAA FORM 7460-1

- Consulting Engineer will prepare and submit FAA Form 7460-1 for Project scope and proposed Construction Safety and Phasing Plan (CSPP).
- Contractor shall submit Form 7460-1 on all equipment over 20 feet high.

- A blank Form 7460-1 - Notice of Proposed Construction or Alteration, is included in Appendix B. Contractor shall submit supplemental FAA Form 7460-1 to FAA at least 45 days prior to utilization of equipment in excess of 20 feet in height.

B. ONSITE BURNING AND BLASTING

Onsite burning and blasting are prohibited.

C. GUN PROHIBITION ON AIRPORT PROPERTY

No firearms or guns are allowed on MAF property.

14. RUNWAY AND TAXIWAY VISUAL AIDS

Airport marking, lighting, signs, and visual NAVAIDs must be clearly visible to pilots, not misleading, confusing, or deceptive. All must be secured in place to prevent movement by prop wash, jet blast, wing vortices, or other wind currents and constructed of materials to minimize damage to an aircraft in the event of inadvertent contact.

Lighting, signs, and NAVAIDs located within object-free area must be frangible.

15. MARKING AND SIGNS

A. ACCESS ROUTE

Contractor required to mark access routes and haul routes with lathes and flag tape.

B. APPROVED WORK AREAS

Contractor must mark approved work areas with lathes and flag tape to ensure construction personnel and equipment remain in approved areas.

16. HAZARD MARKING AND LIGHTING

A. EQUIPMENT

- Contractor vehicles shall be clearly identified with Contractor name, standard FAA marking, lighting, and/or flags. Rotating amber beacons are required for all nighttime work.
- Contractor shall submit 7460s on all equipment over 20 feet in height.
- Any request to use nighttime lighting will be provided in writing two weeks prior to requested start time, from Contractor to Engineer and MAF for approval.

B. WORK AREAS

- Contractor shall provide temporary, low-profile barricades to delineate safe operating areas for aircrafts.
- Barricades shall have flashing red lights.
- Contractor must inspect lights each evening and immediately replace any lights not operating correctly.
- Contractor will be fined for non-working lights as indicated in Project Specifications.
- Line perimeter construction area with low-profile aviation barricades spaced at 5 feet.

17. WORK ZONE LIGHTING FOR NIGHT CONSTRUCTION

If accomplishing work at night, Contractor-provided lighting equipment must adequately illuminate work area. Present a Lighting Plan to MAF, Engineer, and FAA at least 14 days before commencing nighttime construction activities. Requirement for Lighting Plan are stated in Section 3.22 of FAA AC 150/5370-2G.

18. PROTECTION

A. RUNWAY SAFETY AREA (RSA)

No construction or material stockpile shall occur within an active RSA. Contractor shall mark out RSA before construction. RSA is 500 feet wide and extends 1,000 feet beyond runway end for al runways.

B. RUNWAY OBJECT FREE AREA (ROFA)

No material stockpile will occur within an active ROFA. ROFA is 800 feet wide and 1,000 feet beyond runway end for all runways.

C. TAXIWAY SAFETY AREA (TSA)

No construction or material stockpile shall occur within an active TSA. TSA is 171 feet wide.

D. TAXIWAY OBJECT FREE AREA (TOFA)

No material stockpile shall occur within an active TOFA. TOFA is 259 feet wide.

E. OBSTACLE FREE ZONE (OFZ)

No construction activity or material stockpile will penetrate OFZ.

F. RUNWAY APPROACH/DEPARTURE SURFACES

No construction activities will penetrate approach/departure surfaces.

G. OPEN TRENCHES

Open trenches are not permitted within RSA of an open runway or TSA of an open taxiway. Contractor shall prominently mark any open trench or excavation at construction site with lighted barricades.

H. SAFETY INFORMATION

Refer to Appendix A for safety information.

I. JET BLAST

Contractor shall take precautions to minimize effects of jet blast, particularly in areas near runway threshold.

J. ELECTRICAL LOCK OUT/TAG OUT REQUIREMENTS

Contractor shall prepare lockout/tag out plan and communicate procedures to all staff.

K. UNUSED RUNWAY

Where shown on Construction/Safety Plan, Contractor shall denote unusable runway pavement using low-profile aviation barricades. Refer to Plans for details.

19. OTHER CONSTRUCTION LIMITATIONS

A. PROHIBITIONS

- No use of tall equipment over 20 feet unless a 7460-1 determination letter is issued for such equipment.
- No use of open-flame welding or torches.
- No use of electrical blasting caps.
- No use of flare pots.

B. RESTRICTIONS

- Any construction suspension required during specific airport operations will be coordinated by Engineer, Owner, and Contractor during construction.
- Areas that cannot be worked on simultaneously, will be coordinated by Engineer, Owner, and Contractor during construction.
- Refer to Article 16 – Hazard Marking and Lighting, for night construction requirements.
- Seasonal construction restrictions will be coordinated by Engineer, Owner, and Contractor during construction.

APPENDIX A: CONSTRUCTION SAFETY AND PHASING PLAN AND DETAILS

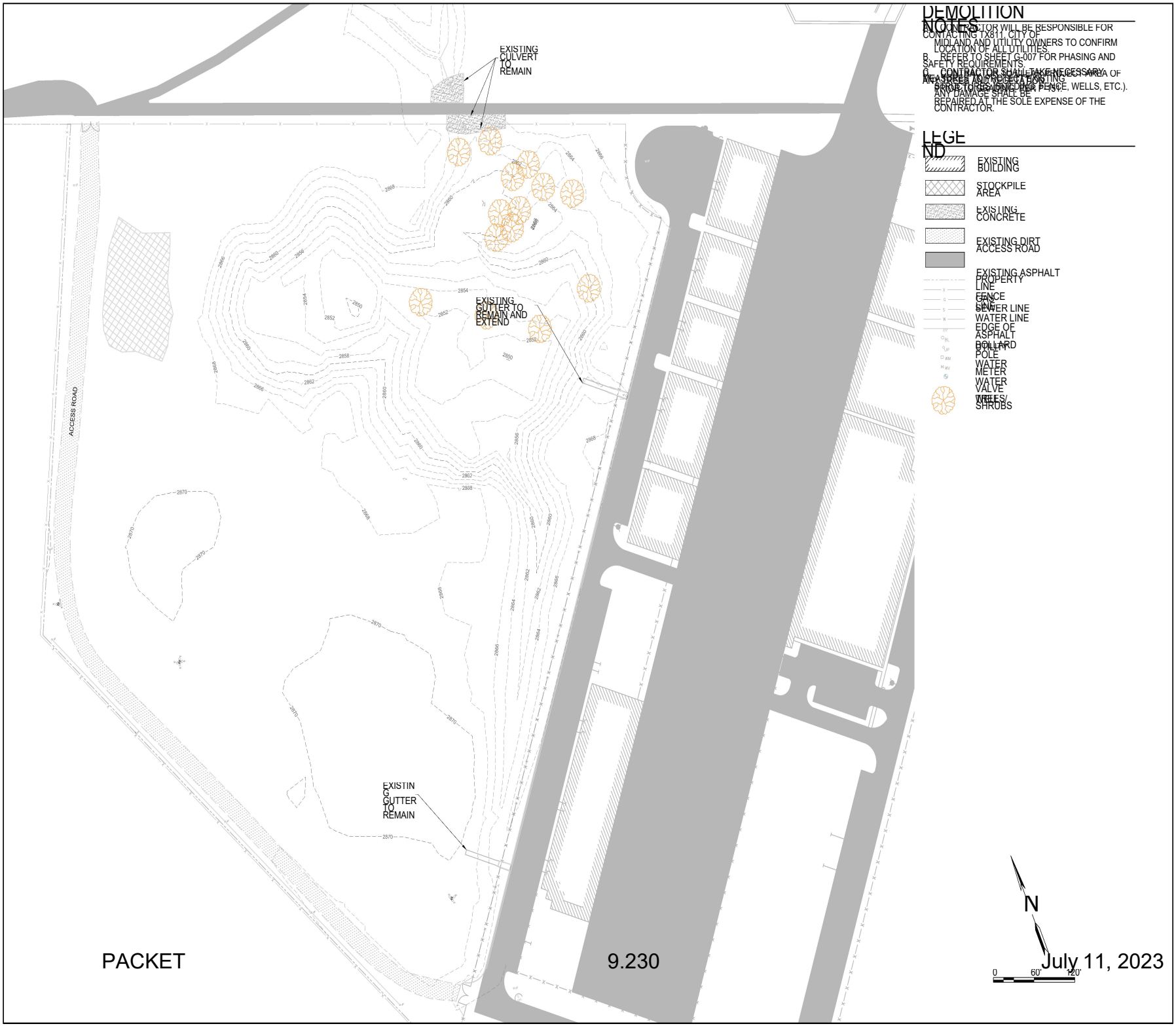

DEMOLITION NOTES

A. CONTRACTOR WILL BE RESPONSIBLE FOR CONTACTING TX811, CITY OF MIDLAND AND UTILITY OWNERS TO CONFIRM LOCATION OF ALL UTILITIES.

B. REFER TO SHEET G-007 FOR PHASING AND SAFETY REQUIREMENTS.

C. CONTRACTOR SHALL TAKE NECESSARY PRECAUTIONS TO PROTECT EXISTING AREAS (PAVEMENT, BUILDINGS, FENCE, WELLS, ETC.). ANY DAMAGE SHALL BE REPAIRED AT THE SOLE EXPENSE OF THE CONTRACTOR.

LEGEND

- EXISTING BUILDING
- STOCKPILE AREA
- EXISTING CONCRETE
- EXISTING DIRT ACCESS ROAD
- EXISTING ASPHALT
- PROPERTY LINE
- FENCE
- GAS LINE
- SEWER LINE
- WATER LINE
- EDGE OF ASPHALT
- BOLLARD
- BOLLEY
- POLE
- WATER METER
- WATER VALVE
- TREES/ SHRUBS

PACKET 9.230 July 11, 2023

Parkhill

THIS DOCUMENT IS RELEASED ON JUN 26, 2023 FOR THE PURPOSE OF INTERIM REVIEW UNDER THE AUTHORITY OF MICHAEL KRUSING, P.E., LICENSE #[illegible] & [illegible] AND SHALL NOT BE USED FOR REGULATORY APPROVAL, CONSTRUCTION, BIDDING OR PERMIT PURPOSES.

MIDLAND INTERNATIONAL AIR & SPACE PORT

MAF NW BASIN WILDLIFE IMPROVEMENTS

Midland International Air & Space Port

CLIENT
MIDLAND INTERNATIONAL AIR & SPACE PORT
Midland, TX
79706

PROJECT NO
19768.18

#	DATE	DESCRIPTION
3	06/21/2023	BID SET
2	10/22/2022	FINAL
1	DESIGN 09/26/2019	PRELIMINARY DESIGN

EXISTING CONDITIONS

G-101

A:\2019\19768.18\03_DSGN\01_DWG\050_CIVIL\C-101-9768.DWG, 6/14/2023 4:14:19 PM, sdane

NOTE:
DISTANCE BETWEEN EXISTING GROUND AND GRADE BREAK AND GRADE BREAK TO BASIN FLOOR VARIES. SEE LAYOUT SHEET FOR POINTS OF INFLECTION OF GRADE BREAK OR BASIN FLOOR.

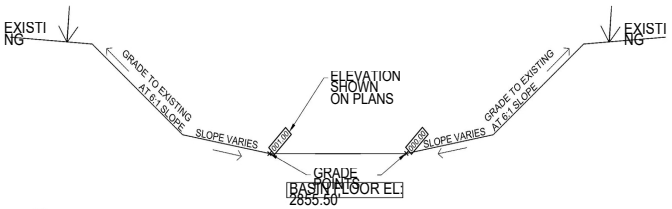

B1 TYPICAL GRADE OF BASIN
NOT TO SCALE

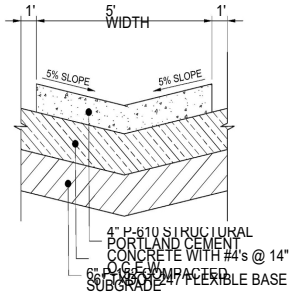

B3 DRAINAGE CHANNEL
NOT TO SCALE

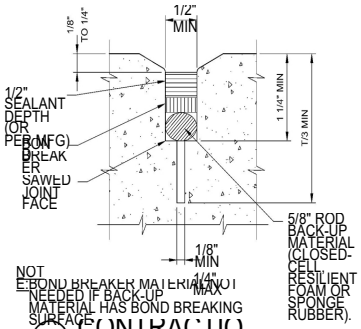

B4 CONTRACTION JOINT
NOT TO SCALE

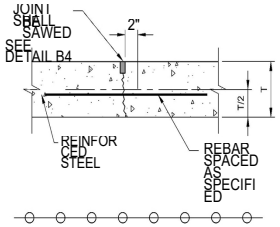

A1 TYPE C CONTRACTION JOINT
NOT TO SCALE

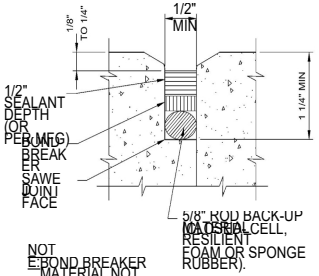

A2 CONSTRUCTION JOINT
NOT TO SCALE

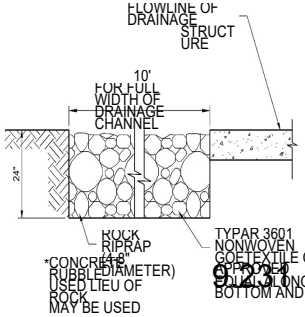

A3 ROCK RIP-RAP DETAIL
NOT TO SCALE

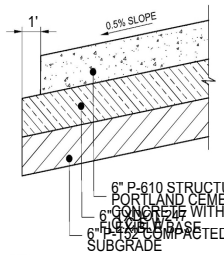

A4 CONCRETE PAVEMENT SECTION
NOT TO SCALE

PACKET

July 11, 2023

Parkhill

THIS DOCUMENT IS RELEASED ON JUN 26, 2023 FOR THE PURPOSE OF INTERIM REVIEW UNDER THE AUTHORITY OF MICHAEL KRUSING, P.E., LICENSE #[illegible] & [illegible] NOT INTENDED FOR REGULATORY APPROVAL, CONSTRUCTION, BIDDING OR PERMIT PURPOSES.

MIDLAND INTERNATIONAL AIR & SPACE PORT

MAF NW BASIN WILDLIFE IMPROVEMENTS

Midland International Air & Space Port

CLIENT
MIDLAND INTERNATIONAL AIR & SPACE PORT
Midland, TX
9506 La Force Blvd.

PROJECT NO
[illegible]9768.18

#	DATE	DESCRIPTION
3	06/21/2023	BID SET
2	10/22/2022	FINAL
1	DESIGN	
[illegible]	[illegible]	PRELIMINARY DESIGN

MISCELLANEOUS DETAILS

C 501

A:\20\89768.18\03_DSGN\01_DWG\050_CIVIL\C-501-9768.DWG, 6/14/2023 7:34:50 PM, sdane

APPENDIX B: FAA FORM 7460-1, NOTICE OF PROPOSED CONSTRUCTION OR ALTERATION (BLANK)

NOTICE OF PROPOSED CONSTRUCTION OR ALTERATION

§ 77.9 Construction or alteration requiring notice.

If you are required to file notice under §77.9, you must submit to the FAA a completed FAA Form 7460–1, Notice of Proposed Construction or Alteration. You may submit a form by one of the following methods:

- Mail: Mail Processing Center, Federal Aviation Administration, Southwest Regional Operation Group, 10101 Hillwood Parkway, Fort Worth, TX 76177
- Fax: (817) 222-5920
- Website: https://oeaaa.faa.gov

(a) Each sponsor who proposes construction or alteration of an airport that is eligible for inclusion in the National Plan of Integrated Airport Systems (NPIAS) must notify the FAA in accordance with this section.

(b) Each person who proposes any of the following construction or alteration must notify the FAA in accordance with this section:

(1) Any construction or alteration that is more than 200 ft. AGL at its site.

(2) Any construction or alteration that exceeds an imaginary surface extending outward and upward at a slope of 100 to 1 for a horizontal distance of 20,000 ft. from the nearest point of the nearest runway of each airport described in paragraph (d) of this section with its longest runway more than 3,200 ft. in actual length, excluding heliports.

(3) Any construction or alteration that exceeds an imaginary surface extending outward and upward at a slope of 50 to 1 for a horizontal distance of 10,000 ft. from the nearest point of the nearest runway of each airport described in paragraph (d) of this section with its longest runway no more than 3,200 ft. in actual length, excluding heliports.

(4) Any construction or alteration that exceeds an imaginary surface extending outward and upward at a slope of 25 to 1 for a horizontal distance of 5,000 ft. from the nearest point of the nearest landing and takeoff area of each heliport described in paragraph (d) of this section which is available for public use and is either a visual flight rules or instrument flight rules landing area, which is constructed or altered after May 29, 2008.

(5) Any highway, railroad, or other traverse way for mobile objects, of a height which, if adjusted upward 17 feet for an Interstate Highway that is part of the National System of Military and Interstate Highways where overcrossings are designed for a minimum of 17 feet vertical distance, 15 feet for any other public roadway, 10 feet or the height of the highest mobile object that would normally traverse the road, whichever is greater, would exceed a height at the point of penetration of the horizontal surface of 0.5 nautical miles or the conical surface described in paragraph (d) of this section. An FAA determination under §77.23(a)(1) or §77.23(a)(2) is not required for any road, 23 feet or greater in height, for which there is no future use shown on any public road planning document I have access to.

(6) Any construction or alteration on any airport regardless of height or location. One engine inoperative takeoff and climbout surface areas are defined for each runway based upon the takeoff and climbout procedure specified for each runway. Unless otherwise specified, an amount equal to 152 feet per statute mile shall be used to calculate the one engine inoperative takeoff and climbout surface slope.

(7) Any construction or alteration on any airport listed in the Airport Directory, Alaska Supplement or Pacific Chart Supplement of the Government Flight Information Publication.

(8) Any construction or alteration on any airport under construction that will be available for public use;

(9) Any construction or alteration on an airport operated by the DOD.

(c) You need to file notice of construction or alteration of:

(1) Any object that will be shielded by existing structures of a permanent and substantial nature or by natural terrain or topographic features of equal or greater height, and will be located in the congested area of a city, town, or settlement where the shielded object would not adversely affect safety in air navigation;

(2) Any antenna structure of 20 feet or less in height, except one that would increase the height of another antenna structure.

(d) You need to file notice with the FAA if you propose construction or alteration that is within the following areas:

(1) Within 20,000 ft. of a public use airport or heliport which is listed in the Airport Directory, Alaska Supplement or Pacific Chart Supplement of the Government Flight Information Publication, and it is of greater height than an imaginary surface extending outward and upward from the airport at the slope of 100 to 1 for a horizontal distance of 20,000 ft. for each runway more than 3,200 ft. in actual length, and 10,000 ft. for all other runways. The distance is measured from the nearest point of the nearest runway of the airport with its longest runway more than 3,200 ft. in actual length, excluding heliports.

(2) Within 10,000 ft. of a military airport or heliport which is operated by the DOD, or within 10,000 ft. of an airport or heliport which is operated by the FAA or proposed in any form or manner known to the FAA, if it is of greater height than an imaginary surface extending outward and upward from the airport at the slope of 100 to 1 for a horizontal distance of 10,000 ft. for each runway of the airport with its longest runway more than 3,200 ft. in actual length, excluding heliports. The distance is measured from the nearest point of the nearest runway of the airport with its longest runway more than 3,200 ft. in actual length, excluding heliports.

(3) Within 5,000 ft. of a public use heliport which is listed in the Airport Directory, Alaska Supplement or Pacific Chart Supplement of the Government Flight Information Publication, and it is of greater height than an imaginary surface extending outward and upward from the heliport at the slope of 25 to 1 for a horizontal distance of 5,000 ft. from the nearest point of the nearest landing and takeoff area of each heliport described in paragraph (d) of this section which is available for public use and is either a visual flight rules or instrument flight rules landing area, which is constructed or altered after May 29, 2008.

(4) Within 5,000 ft. of a military or FAA-approved private use heliport which is not listed in the Airport Directory, Alaska Supplement or Pacific Chart Supplement of the Government Flight Information Publication, and it is of greater height than an imaginary surface extending outward and upward from the heliport at the slope of 25 to 1 for a horizontal distance of 5,000 ft. from the nearest point of the nearest landing and takeoff area of each heliport described in paragraph (d) of this section which is available for public use and is either a visual flight rules or instrument flight rules landing area, which is constructed or altered after May 29, 2008.

(5) Any highway, railroad, or other traverse way for mobile objects, of a height which, if adjusted upward 17 feet for an Interstate Highway that is part of the National System of Military and Interstate Highways where overcrossings are designed for a minimum of 17 feet vertical distance, 15 feet for any other public roadway, 10 feet or the height of the highest mobile object that would normally traverse the road, whichever is greater, would exceed a height at the point of penetration of the horizontal surface of 0.5 nautical miles or the conical surface described in paragraph (d) of this section. An FAA determination under §77.23(a)(1) or §77.23(a)(2) is not required for any road, 23 feet or greater in height, for which there is no future use shown on any public road planning document I have access to.

(6) Any construction or alteration on any airport regardless of height or location. One engine inoperative takeoff and climbout surface areas are defined for each runway based upon the takeoff and climbout procedure specified for each runway. Unless otherwise specified, an amount equal to 152 feet per statute mile shall be used to calculate the one engine inoperative takeoff and climbout surface slope.

(7) Any construction or alteration on any airport listed in the Airport Directory, Alaska Supplement or Pacific Chart Supplement of the Government Flight Information Publication.

(8) Any construction or alteration on any airport under construction that will be available for public use;

(9) Any construction or alteration on an airport operated by the DOD.

(c) You need to file notice of construction or alteration of:

(1) Any object that will be shielded by existing structures of a permanent and substantial nature or by natural terrain or topographic features of equal or greater height, and will be located in the congested area of a city, town, or settlement where the shielded object would not adversely affect safety in air navigation;

(2) Any antenna structure of 20 feet or less in height, except one that would increase the height of another antenna structure.

INSTRUCTIONS FOR COMPLETING FAA FORM 7460-1

PLEASE TYPE or PRINT

ITEM #1. Please include the name, address and phone number of a personal contact point as well as the company name.

ITEM #2. Please include the name, address and phone number of a personal contact point as well as the company name.

ITEM #3. New Construction would be a structure that has not yet been built. Alteration is a change to an existing structure such as the addition of a side mounted antenna, a change to the marking and lighting, a change to power and/or frequency, or a change to the height. The nature of the alteration shall be included in ITEM #21 "Complete Description of Proposal". Deconstruction is a correction to the latitude and/or longitude, a correction to the height, or filing on an existing structure which has never been studied by the FAA. The reason for the notice shall be included in ITEM #21 "Complete Description of Proposal".

ITEM #4. If Permanent, so indicate. If Temporary, such as a crane or drilling derrick, enters the estimated length of time the temporary structure will be up.

ITEM #5. Enter the date that construction is expected to start and the date that construction should be completed.

ITEM #6. Please indicate the type of structure. DO NOT LEAVE BLANK.

ITEM #7. In the event that obstruction marking and lighting is required, please indicate type desired. If no preference, check "other" and indicate "no preference" DO NOT LEAVE BLANK. NOTE: High Intensity lighting shall be used only for structures over 500' AGL. In the absence of high intensity lighting for structures over 500' AGL, marking is also required.

ITEM #8. If the structure has been registered with the FCC, enter the FCC Antenna Structure Registration number here.

ITEM #9 and #10. Latitude and longitude must be geographic coordinates, accurate to within the nearest second known. Latitude and longitude derived solely from a hand-held GPS is only accurate to within 100 meters (328 feet) 95 percent of the time. This data, when plotted, should match the site depiction submitted under ITEM #20.

ITEM #11. NAD 83 is preferred, however, latitude and longitude may be submitted in NAD 27. Also, in some geographic areas where NAD 27 and NAD 83 are not available other datum may be used. It is important to know which datum is used. DO NOT LEAVE BLANK.

ITEM #12. Enter the name of the nearest public use (not private use) airport or heliport, military airfield or heliport to the site. If the structure is or will be in a city, enter the name of that city and state.

ITEM #13. Enter the name of the nearest public use (not private use) airport or heliport, military airfield or heliport to the site. If the structure is or will be in a city, enter the name of that city and state.

ITEM #14. Enter the distance from the airport or heliport listed in #13 to the structure.

ITEM #15. Enter the direction from the airport or heliport listed in #13 to the structure.

ITEM #16. Enter the site elevation above mean sea level and expressed in whole feet rounded to the nearest foot (e.g. 17'3" rounds to 17'. 17'6" rounds to 18'). This data should match the ground contour elevations for site depiction submitted under ITEM #20.

ITEM #17. Enter the total structure height above ground level in whole feet rounded to the next highest foot (e.g. 17'3" rounds to 18'). The data entered in this block should match the overall height above mean sea level and expressed in whole feet as in ITEM #16. The total structure height includes appurtenances mounted on top of the structure, such as antennas, obstruction lights, lightning rods, etc.

ITEM #18. If an FAA aeronautical study was previously conducted, enter the previous study number.

ITEM #19. Enter the relationship of the structure to roads, airports, prominent terrain, existing structures, etc. Attach an 8-1/2" x 11" non-reduced copy of the appropriate 7.5 minute U.S. Geological Survey (USGS) Quadrangle Map MARKED WITH A PRECISE INDICATION OF THE SITE LOCATION. To obtain maps, contact USGS at 1-888-275-8747 or via Internet at "http://store.usgs.gov". If available, attach a copy of the sectional aeronautical chart showing the site location.

ITEM #20. For a new structure, provide a detailed site plan depicting the location of the structure with respect to the airport property and runways. For alterations and deconstruction, include any previously submitted site plan, if available. Site plans should be drawn to scale and should include the following:

- For antennas, include the type of antenna and center of radiation (AGL and AMSL) and all frequencies.
- For antennas, include the type of antenna and center of radiation (AGL and AMSL) and all frequencies.
- (Attach the antenna pattern, if available), include size and configuration of wires and their supporting structures (attach detail if available).
- For buildings/structures, include dimensions, and indicate orientation to true north.
- For each pole/support, include coordinates, site elevation, and structure height above ground level or water.
- For existing structures, thoroughly explain the reason for notifying the FAA (e.g. construction materials or previous study, etc.).
- Filing alterations may alert the FAA that you believe the sponsor of this construction or alteration from complying with any other federal, state or local rules or regulations. If you are not sure what other rules or regulations apply to your proposal, contact local/state aviation's and zoning authorities.

Paperwork Reduction Act Statement: This information is collected to evaluate the effect of proposed construction or alteration on air navigation and is not confidential. Providing this information is mandatory or anyone proposing construction or alteration that meets or exceeds the criteria contained in 14 CFR, part 77. We estimate that the burden of this collection is an average 19 minutes per response, including the time for reviewing instructions, searching existing data sources, gathering and maintaining the data needed, completing and reviewing the collection of information. A federal agency may not conduct or sponsor, and a person is not required to respond to, nor shall a person be subject to a penalty for failure to comply with a collection of information subject to the requirements of the Paperwork Reduction Act unless that collection of information displays a currently valid OMB Control Number. The OMB control number associated with this collection is 2120-0001. Comments concerning the accuracy of this burden and suggestions for reducing the burden should be directed to the FAA at: 800 Independence Ave., S.W., Washington, DC 20591, Attn: Information Collection Clearance Officer, ASP-110.

Please Type or Print on Form

Form Approved OMB No. 2120-0001 Expiration Date: 10/31/2019

U.S. Department of Transportation
Federal Aviation Administration

Failure To Provide All Requested Information May Delay Processing of Your Notice

Notice of Proposed Construction or Alteration

FOR FAA USE ONLY
Aeronautical Study Number

1. Sponsor *(person, company, etc. proposing this action)*:
Attn: of:
Name:
Address:
City: State: Zip:
Telephone: Fax:

2. Sponsor's Representative *(if other than #1)*:
Attn: of:
Name:
Address:
City: State: Zip:
Telephone: Fax:

3. Notice of: ☐ New Construction ☐ Alteration ☐ Existing ☐ Permanent ☐ Temporary (months, days)

4. Work Schedule: Beginning End

5. Duration:

6. Type: ☐ Antenna ☐ Crane ☐ Building ☐ Power Line ☐ Landfill ☐ Tower ☐ Water Tank ☐ Other

7. Marking/Painting and/or Lighting Preferred: ☐ Red Lights and Paint ☐ Dual - Red and Medium Intensity White-Medium Intensity ☐ Dual - Red and High Intensity White-High Intensity ☐ Other

8. FCC Antenna Structure Registration Number *(if applicable)*:

9. Latitude: 0 ' " (NAD 83 / NAD 27)

10. Longitude: 0 ' " (NAD 83 / NAD 27)

11. Datum: ☐ NAD 83 ☐ NAD 27 ☐ Other

12. Nearest: City: State

13. Nearest *Public-use* *(not private-use)* or Military Airport or Heliport:

14. Distance from #13. to Structure:

15. Direction from #13. to Structure:

16. Site Elevation *(AMSL)*: ft.

17. Total Structure Height *(AGL)*: ft.

18. Overall Height (#16 + #17) ***(AMSL)***: ft.

19. Previous FAA Aeronautical Study Number *(if applicable)*: -OE

20. Description of Location: *(Attach a USGS 7.5 minute Quadrangle Map with the precise site marked and any certified survey)*

21. Complete Description of Proposal:

Frequency/Power (kW)	

Notice is required by 14 Code of Federal Regulations, part 77 pursuant to 49 U.S.C., Section 44718. Persons who knowingly and willingly violate the notice requirements of part 77 are subject to a civil penalty of $1,000 per day until the notice is received by the Administrator (49 U.S.C. 46301(a)).

I hereby certify that all of the above statements made by me are true, complete, and correct to the best of my knowledge. In addition, I agree to mark and/or light the structure in accordance with established marking & lighting standards as necessary.

Date	Typed or Printed Name and Title of Person Filing Notice	Signature

FAA Form 7460-1 (5/17) Supersedes Previous Edition

NSN: 0052-00-012-0009

APPENDIX C: ADVISORY CIRCULAR 150/5370-2G, OPERATIONAL SAFETY ON AIRPORTS DURING CONSTRUCTION

All contractors and subcontractors responsible for implementation of this CSPP must review all relevant sections of the FAA AC 150/5370-2G, Operating Safety on Airports During Construction

Click here to link to the full Advisory Circular PDF:

https://www.faa.gov/documentLibrary/media/Advisory_Circular/150-5370-2G.pdf

APPENDIX D: FAA CSPP REVIEW CHECKLIST

Checklist for FAA CSPP Review

Airport Name: MIDLAND INTERNATIONAL AIR & SPACE PORT LOCID: MAF

Associate City: MIDLAND, TEXAS

Project No. 01.9768.18

Project Name: MAF NW BASIN WILDLIFE IMPROVEMENTS

F.1.1. AC 150/5370-2G

This checklist identifies the main elements and sub-elements established under Chapter 2 of Advisory Circular 150/5370-2G. Project Managers (PM) are encouraged to use this checklist as an aid when reviewing a Sponsor's CSPP for conformance to the safety standards. Because the PM's approval/disapproval letter in OE/AAA represents the official FAA action, a completed checklist is not a required record the PM must sign or archive in the grant file.

CSPP Element	Element Addressed?			Remarks
	Yes	No	N/A	
Coordination (Section 2.5)				
– Contractor Progress Meetings	✔			
– Addresses necessary actions when changes are proposed to CSPP	✔			
– Provisions for FAA ATO Coordination	✔			
Phasing (Section 2.6)				
– Phase Elements	✔			
– Construction Safety Drawings	✔			
Area and Operations Affected by Construction Activity (Section 2.7)				
– Identification of affected Areas	✔			No protected surfaces will be affected.
– Mitigation Affects	✔			
Navigation Aid Protection (Section 2.8)				
– Operational NAVAID Critical areas	✔			No NAVAIDs are near work area
Contractor Access (Section 2.9)				
– Location of Stockpiles Construction Material	✔			
– Vehicle and Pedestrian Operations	✔			
Wildlife Management (Section 2.10)				
– Trash	✔			
– Standing Water	✔			
– Tall Grass	✔			
– Fencing and Gates	✔			
– Disruption of Wildlife Habitat	✔			
Foreign Object Debris (Section 2.11)				
– FOD Control Measures	✔			
Hazardous Material Management (Section 2.12)				
– Hazardous Material Controls	✔			

CSPP Element	Element Addressed?			Remarks
	Yes	No	N/A	
Notification of Construction Activities (Section 2.13)				
– List of Responsible Representatives	✔			
– NOTAMs	✔			
– Emergency Notification Procedures	✔			
– Coordination with ARFF	✔			
– Notification to the FAA (Part 77, NAVAIDs….)	✔			
Inspection Requirements (Section 2.14)				
– Daily Inspections	✔			
– Final Inspections	✔			
Underground Utilities (Section 2.15)				
– Procedures for protecting underground utilities	✔			
Penalties (Section 2.16)				
– Penalty provisions for noncompliance with CSPP	✔			
Special Conditions (Section 2.17)				
– Conditions that may affect airport operations	✔			
Runway and Taxiway Visual Aids (Section 2.18)				
– General – Convey Clear Meaning; Secured from movement; Frangible	✔			
– Markings	✔			
– Lighting and Visual NAVAIDs	✔			
– Signage	✔			
Access Routes - Marking and Signage (Section 2.19)				
– Haul Road Demarcation	✔			
Hazard Marking, Lighting and Signage (Section 2.20)				
– Areas Impacted by Construction Operations	✔			
– Equipment	✔			
Work Zone Lighting for Nighttime Construction (Section 2.21)				
– Proper Illumination of Construction Area/Equipment	✔			
Protection Runway and Taxiway Areas, Zones and Surfaces (Section 2.22)				
– Runway Safety Area (RSA)	✔			
– Runway Object Free Area (ROFA)	✔			
– Taxiway Safety Area (TSA)	✔			
– Taxiway Object Free Area (TOFA)	✔			
– Obstacle Free Zone (OFZ)	✔			
– Approach and Departure Surfaces	✔			
Other Limitations on Construction (Section 2.23)				
– Prohibitions	✔			
– Restrictions	✔			

APPENDIX B
CONSTRUCTION MANAGEMENT PLAN

Midland International Air & Space Port

CONSTRUCTION MANAGEMENT PLAN (CMP)

Midland Air & Space Port (MAF)

Northwest Basin Wildlife Improvements
Midland, Texas

June | 2023
Parkhill Project #01976818

Midland International Air & Space Port

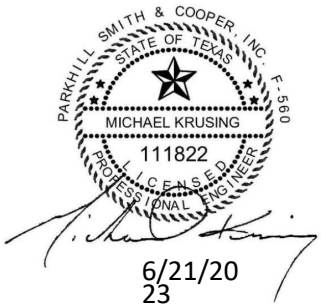

6/21/2023

CONSTRUCTION MANAGEMENT PLAN (CMP)

Midland Air & Space Port (MAF)

Northwest Basin Wildlife Improvements
Midland, Texas

June | 2023
Parkhill Project #01976818

TABLE OF CONTENTS

A. INTRODUCTION 1
B. PERSONNEL 1
C. INSPECTION PROCEDURES AND FREQUENCIES 3
D. SUBMITTAL PROCESS 4
E. QUALITY CONTROL TESTING (BY CONTRACTOR) 4
F. ACCEPTANCE TESTING (BY OWNER'S REPRESENTATIVE) 5
G. TENDERED 6
H. FINAL TEST AND QUALITY CONTROL REPORT 6

APPENDIX A: CONSULTING ENGINEERING STAFF RESUMES
APPENDIX B: LABORATORY CERTIFICATION
APPENDIX C: SUBMITTAL PROCESS SUMMARY
APPENDIX D: QUALITY CONTROL TESTING (BY CONTRACTOR)
APPENDIX E: ACCEPTANCE TESTING/QUALITY ASSURANCE (BY ENGINEER)

A. INTRODUCTION

The Project accomplished under this program consists of regrading the Northwest Basin at the Midland International Air & Space Port (MAF). Other construction items include constructing concrete access road and drainage structures.

B. PERSONNEL AND RESPONSIBILITIES

- Sponsor:
  - Ms. Justine Ruff, Director of Airports, City of Midland, Texas, P.O. Box 60305, Midland Texas 79711, 432.560.2200 x3010
  - Mr. Aaron Easton, Deputy Director of Airports, City of Midland, Texas, P.O. Box 60305, Midland Texas 79711, 432.560.2200 x3010
- Federal Aviation Administration:
  - Michael Van Vliet, FAA, Southwest Region, Texas Airports Development Office ASW-650, 10101 Hillwood Parkway, Fort Worth, Texas 76177, michael.van.vliet@faa.gov, 817.222.5132
- Consulting Engineer and Staff
  - Danny Winchester, PE, Project Manager, Parkhill, 309 West Wall Street, Suite 100, Midland Texas 79701, 432.687.1447, dwinchester@parkhill.com
  - Michael Krusing, PE, Project Engineer, Parkhill, 4222 66th Street, Lubbock Texas 79423, mkrusing@parkhill.com, 806.473.2200
  - Lanell Pahe, Engineer, Parkhill, 3880 Rio Rancho Boulevard NE Suite 400, Rio Rancho, New Mexico 87124, lpahe@Parkhill.com, 505.473.3664
  - Debbie German, Project Coordinator, Parkhill, 4222 66th Street, Lubbock Texas 79423, 806.473.2200, dgerman@parkhill.com
- Project Manager/Engineer will oversee construction period services. Parkhill will also provide one, full-time Resident Project Representative (RPR) during Project construction. A second RPR will be provided if needed. RPR duties, responsibilities, and limitations of authority are described in the Professional Engineering Services Agreement. RPR will report directly to the Parkhill Project Manager. Parkhill will compile a copy of all test reports to be delivered to TxDOT Aviation. Key personnel and chain of communication are described as follows:

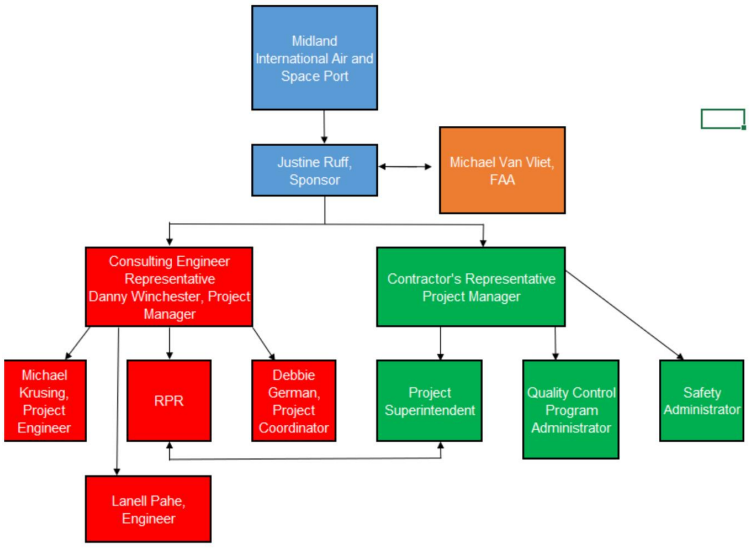

- Contractor (Updated upon award)
  - Contact Name, Title: _____
  - Address: _____
  - City State Zip: _____
  - Phone: _____
  - Email: _____
- Testing Laboratories
  - Sponsor's Quality Assurance Testing Lab (TBD)
    - Contact Name, Title: _____
    - Address: _____
    - City State Zip: _____
    - Phone: _____
    - Email: _____
  - Contractor's Quality Control Testing Lab (TBD)
    - Contact Name, Title: _____
    - Address: _____
    - City State Zip: _____
    - Phone: _____
    - Email: _____

As required, the Sponsor's Quality Assurance (QA) testing laboratory and Contractor's Quality Control (QC) testing laboratory must be certified according to ASTM D3666 and C1077.
Laboratory certificates may be found in Appendix B. Sponsor's QA laboratory is responsible for reporting all construction period and material compliant test results to Contractor, Sponsor, Sponsor's Agent, AA and Engineer. Contractor's QC laboratory is responsible for reporting all construction period and material compliant test results to Contractor, Engineer, Sponsor and Sponsor's Agent.

C. INSPECTION PROCEDURES AND FREQUENCIES

1. BY CONTRACTOR: Contractor is required to perform daily inspections of work in progress and to be performed. Inspection notes shall be captured in Contractor's daily reports and addressed and corrected as applicable. This will include isolated spot checks by Contractor and Contractor's QC testing laboratory. Contractor shall perform certain QC testing, where applicable, as defined in Project Specifications and Article I.E. Quality Control Testing (by Contractor) of Contractor's Quality Control Program.

2. BY ENGINEER: Engineer is required to visit the site at intervals appropriate to the various stages of construction as Engineer deems necessary to observe, as an experienced and qualified design professional, the progress and quality of the various aspects of Contractor's work. Based on information obtained during such visits and observations, Engineer will determine if Contractor's work is proceeding in accordance with the Contract Documents. Engineer will not be required to make exhaustive or continuous inspections to check the quality or quantity of Contractor's work. Engineer's efforts will be directed toward providing assurance to Owner that Contractor is completing the Work in accordance with the Contract Documents and that, based on Contractor's observations and an evaluation of the Contractor's Applications for Payment, the Schedule of Values is acceptable, and the conditions precedent to Contractor's being entitled to each payment have been met. Engineer will not supervise, direct, control, or have authority over or responsibility for Contractor's means, methods, techniques, sequences, or procedures of construction, or the safety precautions and programs incident thereto, or for any failure of Contractor to comply with laws, rules, regulations, ordinances, codes, or orders applicable to Contractor's furnishing and performing the Work. Engineer will not have control over or charge of and will not be responsible for acts or omissions of Contractor, Subcontractors, or any of their agents or employees, or any other persons performing any of the Work, except as may otherwise be required of Engineer in the Contract Documents. Engineer will not be responsible for the failure of any Subcontractor to perform or furnish the Work in accordance with the Contract Documents.

3. BY ENGINEER'S REPRESENTATIVE (RPR): Parkhill will provide onsite full-time daily observation of Contractor's QC testing further in their role as Contractor Quality Control Program Reviewer (CQCPR) as per Agreement for Professional Services. RPR will check for "general conformance to plans and specifications." RPR will not "inspect" every detail of Contractor's Project nor direct Contractor operations. RPR will observe, document findings, and bring any concerns to Parkhill project manager. RPR will also coordinate Owner's QA testing laboratory. Tests will be performed as required by Technical Specifications and as directed by AA as per Agreement for Professional Services. RPR will maintain daily logs [in accordance with Quality Control Program] documenting daily activities, observations, and testing performed. Logs will be submitted to AA as part of Project Final Report, if applicable. RPR will perform periodic review of Contractor's QC testing, including test reports, and will prepare Daily Reports (Diaries) documenting RPR's observations and any corrective actions taken by Contractor. Include all photos in Daily Reports. Submit Daily Reports to AA Project Manager and carbon copy Sponsor. Final Report.

D. SUBMITTAL PROCESS

Contractor must prepare and submit a complete submittal list at Preconstruction Meeting to populate into Procore and maintain throughout Project duration. Engineer will also maintain a record of submittal status in Procore. All submittals shall address "Buy American" and FAA-required requirements by having Contractor submit a written certification statement indicating requirements are met. A preliminary list of submittals may be found in Appendix C. This list is not complete. Contractor to omit a submittal from list.

E. QUALITY CONTROL TESTING (BY CONTRACTOR)

Contractor must visually inspect all items used upon arrival and maintain control charts for applicable material production. Contractor shall perform and document all daily inspections and tests as determined in the Technical Specifications, FAA Item C-100 – Contractor Quality Control Program. Contractor shall make QC reports, test results, and inspection reports available to Engineer. Provide test results before start of the following day. Provide inspection reports on working day of record. All items of material and equipment are subject to Engineer surveillance. If Contractor determines to perform tests or sampling and testing in addition to the requirements of QC Program, Engineer may expect Contractor to:

- Perform adequate quality control measures.
- Furnish Engineer with required samples for independent quality assurance tests.
- Assist Engineer in obtaining samples.
- Cooperate with Engineer and laboratory personnel and furnish facilities required for the proper and convenient performance of their duties.

For a list of Parkhill tests, see Appendix D, Table 2 – Quality Control Testing by Contractor. All items of material and equipment are subject to Engineer surveillance. If Contractor determines to perform tests or sampling and testing in addition to the requirements of QC Program, Engineer may expect Contractor to:

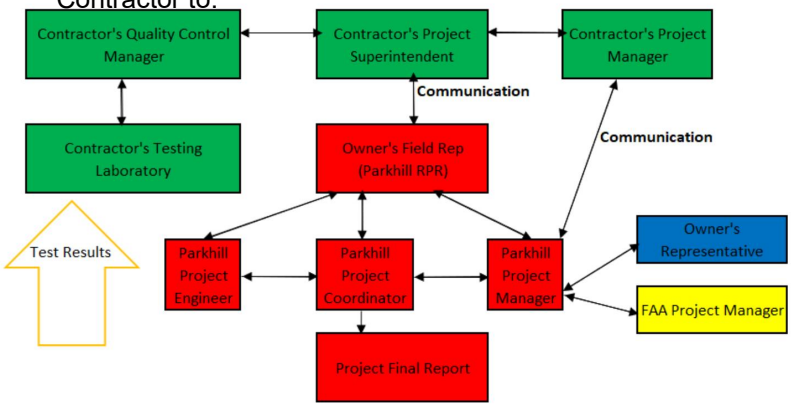

Summary of Action: If/when deficiencies arise during construction, instigate immediate communication, discussion, and corrective action including but not limited to:

- Discussion of test results and potential implications
- Retest by Contractor to verify results.
- If retest confirms deficiency, Contractor shall rework deficiency or potentially replace
- Removal and replacement of defective material tested by Contractor's laboratory.
- Contractor shall develop a plan for avoiding same deficiency on future segments of Work.
- Differences in results addressed in Contractor's QC Plan.

F. ACCEPTANCE TESTING (BY OWNER'S REPRESENTATIVE)

For Testing Methods, see Appendix E, Table 3 - Quality Assurance (by Engineer).

Quality Assurance Testing Responsibility:

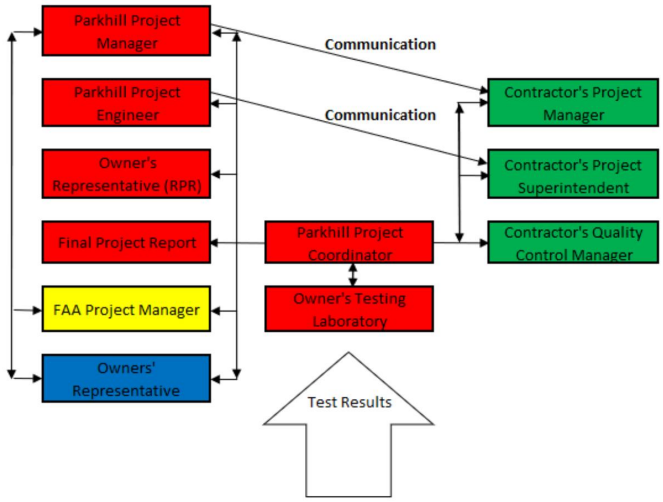

G. TEST RESULTS AND DOCUMENTATION

Daily Quality Control (QC) Tests: Contractor must document all QC test results performed on Project. Submit test results to RPR for review the day after testing is performed. If results are deficient, RPR will initiate dialogue with Contractor's Superintendent. If results are favorable, RPR will forward results to Parkhill Project Assistant to be compiled for Project Report.

Daily Quality Acceptance Tests: RPR will coordinate testing with Owner's Laboratory. RPR will record test results at point of testing, using this data to reconcile test reports received from Owner's Testing Laboratory. RPR will also note tests performed in failing. Deficient test results will be immediately communicated to Contractor's Project Superintendent.

- Retest: Whether passing or failing, RPR will obtain a copy of all QC test results performed by Contractor. Deficient results will result in immediate communication between Contractor and Engineer and subsequent retesting. Corresponding tests performed by Owner's Testing Laboratory will be documented.

H. FINAL TESTS AND QUALITY ASSURANCE REPORT

As part of the Project Report, Engineer, Contractor, and Owner's Testing Laboratory will coordinate preparation of a Final Test and Quality Control Report. Report will summarize number of tests performed versus number of tests required for each specification item. Failed tests and subsequent retests will be included. Where necessary, document acceptance of specification deficiencies.

APPENDIX A: CONSULTING ENGINEER STAFF RESUMES
(v b re est



Danny Winchester, PE

Civil Engineer | Principal

Danny Winchester, PE is a Principal and a Team Leader for Parkhill's Aviation Sector. His 35 years at Parkhill have been spent in aviation design and project management. Danny's aviation design has been mostly with FAA Certificated Airports (Part 139). He has been involved in aviation projects at Midland International Air & Space Port since he came to work for Parkhill. He has developed a strong expertise in FAA funding processes for Airport Improvement Project funding and Passenger Facility Charge funding. This expertise has allowed Danny to assist the City of Midland in acquiring over $150 million of funding from FAA for Capital Improvement Projects at the Midland International Airport over the past 35 years. Danny assisted Midland International Air & Space becoming the first Commercial Service Airport in Texas to receive an FAA Certified Space Launch Site Operator License.

Danny has served the engineering profession by serving in many roles at the local, regional, and state levels of the Texas Society of Professional Engineers. He was recognized by the Texas Society of Professional Engineers as both the Engineer of the Year and Young Engineer of the Year for the Permian Basin Chapter. He received the Distinguished Engineer Award from the Texas Engineering Foundation - 2004.

EDUCATION
Texas Tech University
Bachelor of Science, Engineering, 1984

REGISTRATION
Licensed Professional Engineer
Texas, 65060

YEARS OF EXPERIENCE
37

NOTABLE PROJECTS

- Midland International Airport Security Access Control System
- MAF Access Control System Improvements
- MAF Apron Lighting and Pavement Rehabilitation
- MAF Aircraft Ramp Rehabilitation
- MAF Airfield Lighting Vault Upgrade
- MAF Airfield Lighting and Signage
- MAF Airfield Pavement Crack Sealing
- MAF Concrete Taxiway Rehabilitation
- MAF Construct Taxiway and Apron at ANG
- MAF Emergency Roadway and Gates Rehabilitation
- MAF Executive Apron Reconstruction
- MAF Executive Apron Reconstruction Area B
- MAF New Terminal Vehicle Parking Lots
- MAF Overlay Taxilane
- MAF Runway 16R/34L Extension - Phase 1
- MAF Runway 16R/34L Extension - Phase 2
- MAF Rehab Entrance Road Pavement and Guidance Signage
- MAF RIM (Runway 10 End)
- MAF Runway 16R/34L Rehabilitation
- MAF Security Checkpoint Expansion
- MAF Taxiway P Aircraft Parking
- MAF Terminal Building Rehabilitation
- MAF Taxiway Systems Rehabilitation
- MAF Terminal Building Outbound Baggage Conveyance System Replacement
- MAF Terminal Rehabilitation
- MAF Terminal Vehicle Parking Rehabilitation and Parking
- MAF Terminal Building Equipment Replacement
- MAF Terminal Expansion - Gate 6



Michael Krusing, PE

Civil Engineer I Associate

Michael Krusing, PE is an Associate and Team Leader for Parkhill's Aviation Sector. After joining Parkhill in 2007, Michael worked with the infrastructure team in Amarillo, until 2010, when he joined Parkhill's Aviation team. In November 2014, Michael transferred from Parkhill's Amarillo office to the Lubbock office to better serve Parkhill's clients. Michael has gained experience by designing multiple projects for TxDOT Aviation and New Mexico Department of Transportation. He has also worked on projects benefiting Lubbock Preston Smith International Airport, Midland International Air and Space Port, and Laredo International Airport. Michael played a vital role in the designs of two projects that won Most Outstanding Airport in 2015 (Artesia Municipal) and 2016 (Eastside County).

EDUCATION
Texas Tech University
Bachelor of Engineering, 2007

REGISTRATION
Licensed Professional Engineer
111822
Licensed Professional Engineer
New Mexico, 20863

YEARS OF EXPERIENCE
14

NOTABLE PROJECTS

- Artesia Municipal Airport Runway 12-30 Phase II Reconstruction
- Artesia Municipal Airport Runway 12-30 Reconstruction Preliminary Design, Final Design, and Construction Services
- Artesia Municipal Airport Runway 12-30 Reconstruction Preliminary Engineering Report
- Artesia Municipal Airport Runway 3-21 Rehabilitation
- Artesia Municipal Airport Taxiway A1 Construction
- El Paso International Airport FBO Ramp Addition and Taxiway U & V Reconstruction
- Lubbock Runway 17R-35L Reconstruction
- MAF Airfield Lighting Rehabilitation
- MAF Concrete Terminal Apron Rehabilitation
- MAF Nav Barrow Wildlife
- MAF Terminal Vehicle Parking Rehabilitation and Parking
- New Hangar Development
- Replacement Roadway and Gates Rehabilitation
- TxDOT Cleburne Taxiway D Relocation, Runway 15/33 and Taxiway A Rehabilitation
- TxDOT Dumitt Municipal Airport 2011
- TxDOT Floydada Municipal Airport
- TxDOT Graham Municipal Airport
- TxDOT Hale County Airport
- TxDOT Moore County Airport
- TxDOT Hemphill Co Airport
- TxDOT Perryton Airport
- TxDOT Hereford Airport



Lanell Pahe

Engineering Technician

Lanell Pahe is a member of Parkhill's Aviation Sector. Her design experience includes pavement design, FAAR field pavement evaluation, airfield site layout, marking and electrical layouts, pavement rehabilitation, drainage, site grading, Stormwater Pollution Prevention Plan (SWPPP), and Construction Safety and Phasing Plan Layout. Lanell has worked on multiple Aviation Projects and Part 139 airports. She uses Civil 3D 2019, AutoCAD and G.I.S. for design and project cost estimating.

EDUCATION
New Mexico State University
Bachelor of Science Engineering Technology, 2016

YEARS OF EXPERIENCE
7

NOTABLE PROJECTS

- Artesia Municipal Airport Runway 12-30
- Artesia Municipal Airport Runway 3-21 Rehabilitation
- CES - Albuquerque ABQ Jet Bridge Assessment
- El Paso International Airport FBO Ramp Addition and Taxiway U & V Realignment
- El Paso International Airport Taxiway A Realignment and Taxiways D & J Reconstruction, Joint Seal
- LBB Airfield-Wide Asphalt - Package 3
- LBB CIP Update-Airfield Asphalt Repair Package 3
- LBB Runway 17R-35L Ph II Construction
- LBB Taxiways M and J Rehabilitation
- Lubbock Preston Smith International Airport Runway 17R-35L Design
- Lubbock Preston Smith International Airport Terminal Apron Rehabilitation
- Lubbock Runway 17R-35L Construction
- MAF Airfield Lighting Rehabilitation
- MAF Concrete Terminal Apron Rehabilitation
- MAF NW Basin Wildlife Improvements
- MAF RIM (Runway 10 End)
- Midland International Air and Space Port Airfield Storm Drainage Study and Upgrades
- Municipal Airport Runway 12-30 Reconstruction Preliminary Design, Final Design & Bid Phase Services
- Plainview-Hale County Business Park Regional Airport SWPPP
- TxDOT Cleburne Taxiway D Relocation, Runway 15/33 and Taxiway A Rehabilitation
- TxDOT Floydada Municipal Airport
- TxDOT Hale County Airport 2013
- TxDOT Hemphill County Airport 2013
- TxDOT Hereford Airport 2014
- TxDOT Midland Airpark Hangars
- TxDOT Moore County Airfield Rehab
- TxDOT Muleshoe Municipal Airport Pavement Reconstruction
- TxDOT Perry Lefors Field (Pampa) Elec Improvements
- TxDOT Perryton Airport 2040
- TxDOT Post-Garza County Airport Improvements
- TxDOT Stanton Airport Pavement Rehab Lighting



Debbie German

Project Assistant

Debbie is the Aviation Project Assistant (PASS) and has been with Parkhill since March 2015. She began with Parkhill in the Civil Clerical department, where she completed and reviewed FAA, TxDOT, and EJCDC specifications, reports, and more. She continues to work with those entities as well as assist in creating Parkhill's Civil Master Specifications to improve the firm's design communication and clarity. As a PASS, she provides project management support to the Aviation Sector with project documentation, internal and external communication, and project tracking. Debbie has a thorough understanding of TxDOT's eGrants, assisting clients in securing TxDOT funding for their projects, and Procore, Parkhill's go-to software for communicating Civil project information among the client, design team, and other stakeholders. In each capacity, Debbie serves as a liaison between her clients, the project managers, and the project superintendents to ensure clear communication among each party. She also is a member of the firm's Project Success Committee, which upholds its core values and motto of Building Community.

EDUCATION
University of Phoenix
Bachelor of Business Services / Management, 2012

YEARS OF EXPERIENCE
6

NOTABLE PROJECTS

- LBB Terminal Apron Rehabilitation
- MAF Airfield Lighting Vault Relocation
- MAF Airfield Pavement Maintenance
- Concrete Apron Rehabilitate NW Quadrant
- Tulsa Airport Pavement Rehabilitation
- Tulsa Airport Perimeter Road Rehabilitation
- TxDOT Cameron AP Pavement Rehab, Lighting, and PAPI
- TxDOT Cleburne Taxiway D Relocation, Runway 15/33 and Taxiway A Rehabilitation
- TxDOT Cuero Municipal Airport Taxiway Rehabilitation
- TxDOT Hondo Municipal Airport Taxiway Rehabilitation
- TxDOT Odessa Ector County Airport Improvements
- TxDOT Pecos Municipal Airport Taxiway and Apron Pavement Rehabilitation
- TxDOT Seymour Municipal Airport Runway 17-35 Improvements
- TxDOT Winkler County Airport Pavement Improvements
- Winkler County Airport Hangars

APPENDIX B: LABORATORY CERTIFICATION

Available Upon Request

APPENDIX C: SUBMITTAL PROCESS SUMMARY

Table 1: SUMMARY OF SUBMITTALS

Specification	Spec Section	Submitted By	Material	Test Standard	Test Required	Sampling Locations	Minimum Test Frequency	Requirements	Notes
C-102 Temporary Air and Water Pollution, Erosion, Sedimentation and Control	102-3.2	C	Schedule						Contractor to prepare SWPPP and NOI, submit copies to Engineer/Owner.
C-105 Mobilization		C		None	None				
P-151 Clearing and Grubbing		C		None	None				
P-152 Excavation, Subgrade, and Embankment		C		None	Nonw				
P-605 Joint Sealants for Pavements	605-2.1	C	Joint Sealant	ASTM D6690					
	605-2.2	C	Backer Rod	ASTM D5249				25% +/- 5% larger in diameter than the nominal width of the joint	
	605-3.2	C	List of machines, equipment, and tools					X days prior to use on the project	
P-610 Concrete for Miscellaneous Structures	610-2.1a	C	Reactivity	ASTM C1260	Alkali Reactivity of Aggregates	Source	1 / 6 MO.	<0.08% at 14 days	Combine Fine and Coarse aggregate.
	610-2.2	C	Coarse Aggregate	ASTM C33	Gradation	Source	1 / Project	Requirements in Table 4, Class 5S	
	610-2.3	C	Fine Aggregate	ASTM C33		Source	1 / Project	Conform to test method.	
	610-2.4	C	cement	ASTM C595		Source	1 / Project	Type I, IP, IP-A, IS-A, IL	
	610-2.4	C	Cement	ASTM C114 or ASTM C1365	Alkalies	Source	1/ Project		
	610-2.5.a	C	Fly Ash	ASTM C618		Source	1/ Project	CaO Content <15%, total available alkali content <3% (ASTM C311)	
	610-2.6	C	Water	ASTM 1602		Source	1/Project	Potable water. Conform to test method.	
	610-2.7.a	C	Air-Entraining Admixture	ASTM C260	Air-Entraining Admixtures for Concrete	Source	1 / Project		
	610-2.7.b	C	Water-Reducing Admixture	ASTM C494		Source	1/Project	Type A, B, D	Type F & G high range water reducing admixtures and ASTM C1017 flowable admixtures shall NOT be used
	610-2.7.c	C	Chemical Admixture	ASTM C494	Set Retarding, Set Accelerating Admixture	Source	1 / Project	Retarding shall meet Type A, B, or D; Set accelerating shall meet Type C or E admixtures containing calcium chloride shall not be used.	Approved by RPR
	610-2.8	C	Premolded Joint Material	ASTM D1751 or ASTM D6690	Premolded Joint Seal	Source	1 / Project	Conform to test method.	
	610-2.9	C	Joint Filler	ASTM D6690		Source	1 / Project	Conform to test method	See P-605
	610-2.10	C	Reinforced Steel	See Steel Reinforcement Table	Steel Reinforcement	Source	1/Project	Conform to test method in table "Steel Reinforcement"	
	610-2.11	C	Curing Material	ASTM C309	See Table	Source	1 / Project	See Table "Material for Curing"	

Table 1: SUMMARY OF SUBMITTALS

Specification	Spec Section	Submitted By	Material	Test Standard	Test Required	Sampling Locations	Minimum Test Frequency	Requirements	Notes
P-610 Concrete for Miscellaneous Structures	610-3.2	C	Concrete Mixture	ASTM C39	Compressive Strength of Cylindrical Specimens Concrete	Source/Lab	1 / Project	Shall develop a compressive strength of 4000psi in 28 day.	Concrete shall contain no less than 470lbs cementitious material per cubic yd, water cementitious ratio shall not exceed .45 by weight.
	610-3.2	C	Concrete Mixture	ASTM C231	Air Content	Source	1/Project	Air content of concrete shall be 5% +/- 1.5%	
	610-3.2	C	Concrete Mixture	ASTM C143	Slump Test	Source	1 / Project	Slump not more than 4"	
	610-3.3	C	Mixing	ASTM C94 or ASTM C685	Air Temp	Source	1 / Structure	Concrete shall not be mixed while the air temp is <40 degrees F	
T-901 Seeding	901-2.1	C	Seed	Fed Spec JJJ-S-181	Type	Source	Project	AWIS Seed Act; Refer to Seed Properties and Rates Table	Seed blend/quantity of type seeds and application between 20%-80%
T-905 Topsoiling	905-2.1	C	Topsoil	ASTM C117	Wash Test	Source	Project	80% of material passing 200 mesh sieve.	
	905-2.2	C	Topsoil			Source	1/Project		Inspect Source Material (pH and organics)
T-908 Mulching	905-2.1	C	Mulch		Sample	Source	1/project, 30 days before delivery to project site	Sample to be approved by RPR	
TxDOT Item 247 Flexible Base	247-2.1	C	Aggregate	Tex-110-E	Sieve Analysis	Source	1 / Project	Table 1	Grade 1-2
	247-2.1	C	Aggregate	Tex-104-E	Liquid Limit, Plasticity Index	Source	1 / Project	< 40 < 10	Grade 1-2
	247-2.1	C	Aggregate	Tex-106-E	Wet Ball Mill, Increase passing #40 Sieve	Source	1 / Project	< 40	Grade 1-2
	247-2.1	C	Aggregate	Tex-116-E	Wet Ball Mill, Increase passing #40 Sieve	Source	1 / Project	< 20	Grade 1-2
	247-2.1	C	Aggregate	Tex-117-E	Compressive Strength, psi (Lateral Pressure Min0 psi)	Source	1 / Project	< 35	Grade 1-2
	247-2.1	C	Aggregate	Tex-117-E	Compressive Strength, psi (Lateral Pressure 15 psi)	Source	1 / Project	< 175	Grade 1-2
	247-2.1.2	C	Aggregate	Material Type		Souce	1 / Project	Type C	
Item MC - Rock RipRap & Filter Fabric	MC-1.2A	C	Aggregate		Gradation Curve	Souce	1 / Project		Size, 4 to 8 inches
	MC-1.2B	C	Aggreagate	ASTM C127; ASTM C127; ASTM C88	Bulk Specific Gravity, Absorption, Sodium Sulfate Soundness	Souce	1 / Project	2.5; 2; 10%	
	MC-1.2C	C	Aggregate		Location of Rock Name and Source	Souce	1 / Project		
	MC-1.2D	C	Geotextile	See Specifications					

APPENDIX D: QUALITY CONTROL TESTING (BY CONTRACTOR)

Table 2: QUALITY CONTROL (by Contractor)

Specification	Spec Section Material		Test By	Test Procedure Sampling Locations	Test Required		Minimum Test Frequency	Requirements	Notes
C-102 Temporary Air and Water Pollution, Soil Erosion, and	102-3.2	C	Proposed method of erosion and pollution control				1/Project		
	102-3.2	C	Plan for waste disposal				1/Project		
	102-3.3	C	Erosion Control	Erosion Control Plan, CSPP & AC 150/5370-2					Control pollution of air and water, soil erosion, and siltation through use of silt fences, berms, dikes, basins, ditches, slope drains, sediment traps, sandbags, straw bales, gravel filters, mulches, grasses, and fiber
	102-3.3	C	Pollution Control Measures						
C-105 Mobilization	105-2	C	Posted Notices						Equal Employment Opportunity, Davis Bacon Wage Poster
P-101 Surface Preparation	101-3.7	C	Maintenance - Pavement						Determinma tion Applicable Davis-Bacon Wage Rate
P-152 Excavation, Subgrade, and Embankments		C		None	None				
P-153 Clearing and Grubbing		C		None	None				
P-605 Joint Sealants for Pavements		C		None	None				
P-610 Concrete for Miscellaneous Structures	610-3.2	C	PCC	ASTM C231	Air Content		1 / truck at project	5% ± 1%	
	610-3.7	C	PCC	ASTM C143	Slump Test		1 / structure greater than site	Slump not more than 4"	RPR to monitor test.
	610-3.13	C			Temperature			>40 degrees F	If below 40 degree F, refer to ACI 306R
	610-3.14	C			Temperature			<85 degrees F	If concrete placed in conditions >85 degrees F, refer to ACI 305R.
T-901 Seeding	901-3.4	C	Maintenance					Protect seeded areas against traffic or other use by placing warning signs and barricades as approved by RPR; shall mow and water as directed to maintain seeded areas.	Protect seeded areas against traffic or other use by placing warning signs and barricades as approved by RPR; shall mow and water as directed to maintain seeded areas until final inspection and acceptance of the work.
T-905 Topsoiling	905-2.1	C	Topsoil	pH, organic content				pH between 5.5-7.5	pH, 3%-20% organics
T-908 Mulching	908-3,3	C	Mulch	Care & Repair				Protect from traffic or other use by placing warning signs and/or barricades, as approved by RPR	

APPENDIX E: ACCEPTANCE TESTING/QUALITY ASSURANCE (BY ENGINEER)

Table 3: QUALITY ASSURANCE (by Engineer)

Specification	Spec Section Test By		Material	Test Procedure Required	Test	Sampling Locations	Minimum Test Frequency	Requirements	Notes
C-102 Temporary Air and Water Pollution, Soil Erosion, and Siltation Control Measures	102-3.1	E		BMP	None				
C-105 Mobilization		E		None	None				
P-101 Surface Preparation and Grubbing		E		None	None				
P-152 Excavation, Subgrade, and Embankment	152-2.5	E	Subgrade	Density		Area where subbase or base course is to be applied		100% Max Density for non-cohesive soils (PI<3) (ASTM D4318). 95% Max Density for cohesive soils (ASTM D698).	
	152-2.7	E	Subgrade	Density	Compaction thickness	Once subgrade is being prepared	1st half-day of construction	Test to be performed in presence of RPR	>6" thickness
	152-2.9	E	Subgrade	Proof-rolling	Compaction	As specified by RPR	Prior to embankment (and after compaction completed)	Test to be performed in presence of RPR	
	152-2.10	E	Subgrade	ASTM D6938	Nuclear Density Test	In-Place	Per 12 inch lift	100% Max Density for non-cohesive soils (PI<3 use ASTM D4318). 95% Max Density for cohesive soils (ASTM D698)	
	152-2.10	E	Subgrade	Moisture Density (Proctor) ASTM D698 or D1557		Area where subgrade is being applied	3,000 Sq. Yds per lift, or as determined by Geotechnical Engineer	T-99 or T-180 Optimum Moisture	FAA RD-76-66 for additional guidance.
	152-2.13-a	E	Subgrade	Smoothness	Straight Edge	Perpendicular to CL		shall not vary more than +/- 1/2" when straightedge tested with	All final smoothness and grade checks to happen in presence of RPR
	152.2-13-b	E	Subgrade	Grade	Crown	50 foot grid		within +/- .05' of specified grade	
P-605 Joint Sealants for Concrete Pavements		E		None	None				
P-610 Concrete for Misc. Structures	610-4.1	E	PCC	ASTM C143	Slump Test		1 / truck at project site	Not more than 4".	
	610-4.1	E	PCC	ASTM C231	Air Content		1 / structure	5% air ± 1%	
	610-4.1	E	PCC	ASTM C31 AND ASTM C39	Compressive Stength		1/structure		Shall develop a compressive strength of 4000psi in 28 day.
T-901 Seeding		E		None	None				
T-905 Topsoiling		E		None	None				
Item MC-5308 Woven Geotextile Interlayer		E		None	None				

City Council Meeting

Item Number: 10

Meeting Date: July 11, 2023

To: City Council / City Manager

From: Justine Ruff, Director

Subject: **Motion approving the plans and specifications for the MAF Taxiway "E" Reconstruction Project, said plans and specifications being on file in the City Secretary's office referenced by the number and date of this motion, and authorizing the Interim City Manager or the Interim City Manager's designee to advertise for competitive bids for said project pursuant to the statutes of the State of Texas for accomplishing the work set forth in said plans and specifications (DISTRICT 4) (AIRPORTS)**

Purpose:

Motion approving the plans and specifications for the MAF Taxiway "E" Reconstruction Project, said plans and specifications being on file in the City Secretary's office referenced by the number and date of this Motion, and to authorize the Interim City Manager or the Interim City Manager's designee to advertise for competitive bids for said project pursuant to the statues of the State of Texas for accomplishing the work set forth in said plans and specifications.

Recommended City Council Action:

Approve

Fiscal Impact:

To Be Determined

Discussion:

In the Airport's 2021 Agreement with Parkhill, Smith & Cooper, the MAF Taxiway "E" Reconstruction Project (900412) was included. This project addresses the existing Taxiway "E" which was last rehabilitated in 1993 with a surface seal applied in 2013. Block cracking is occurring in several areas of the pavement that penetrate the base section below the asphalt

surface. Foreign Object Debris (FOD) has become an issue from the deteriorating asphalt surface breaking off at the edges of the cracks. This project will reconstruct Taxiway “E”, West of Taxiway “A” full depth with new subgrade course, base course and asphalt surface. This project will be included in FAA Grant #70, and the grant will cover 90% of the construction expenses of the project. The project is being bid at this time as the FAA has requested that we have “bids in hand” when the Grant is funded.

Tina Gaug

City Manager’s Office

Parkhill

PROJECT MANUAL

MIDLAND INTERNATIONAL AIR & SPACE PORT (MAF)

Taxiway E Reconstruction

Midland, Texas

Midland International Air & Space Port

June | 2023

Parkhill Project #01623522

PACKET 10.3 July 11, 2023

Parkhill

PROJECT MANUAL

MIDLAND INTERNATIONAL AIR & SPACE PORT (MAF)

Taxiway E Reconstruction

Midland, Texas

Midland International Air & Space Port

THIS DOCUMENT IS RELEASED FOR THE PURPOSE OF INTERIM REVIEW UNDER THE AUTHORITY OF BIJAN T. JAMALABAD, P.E., LICENSE #88531. IT IS NOT TO BE USED FOR REGULATORY APPROVAL, CONSTRUCTION, BIDDING, OR PERMIT PURPOSES.

PARKHILL F-560
06/26/2023

June | 2023

Parkhill Project #01623522

PACKET 10.4 July 11, 2023

TABLE OF CONTENTS

ADVERTISEMENT FOR BIDS (Notice to Bidders)..... A
INSTRUCTIONS TO BIDDERS.....IB
BID BOND.....BB
PROPOSAL..... C
CONTRACT..... D
PERFORMANCE BOND .....E
PAYMENT BOND .....F
CERTIFICATE OF INSURANCE..... G
EXPERIENCE RECORD ..... H
EQUIPMENT SCHEDULE I

Contract Assurance/ Prompt Payment
City of Midland Department of Airports - DBE Policy Statement and Documentation
Bidder Information Sheet
Davis-Bacon Wage Rates

SPECIAL PROVISIONS

Article	Title
SP-1	Scope of Work
SP-2	Contract Documents
SP-3	Time and Order of Completion
SP-4	Limitation of Operation
SP-5	Construction Activity
SP-6	Affidavit of Bills Paid
SP-7	Calendar Day
SP-8	Protection of Property
SP-9	Electric Power and Natural Gas
SP-10	Lines and Grades
SP-11	Water for Construction
SP-12	Material Tests
SP-13	Barricades, Signs, and Hazard Markings
SP-14	Prevention of Air and Water Pollution
SP-15	Public Convenience and Safety
SP-16	Final Cleaning
SP-17	Insurance
SP-18	Removal and Disposal of Structures, Utilities, and Obstructions
SP-19	Conformity with Plans and Allowable Deviations
SP-20	Removal of Defective and Unauthorized Work
SP-21	Disputed Claims for Extra Work
SP-22	Federal Participation
SP-23	Indemnification
SP-24	Contractor Responsibility for Work
SP-25	Correction of Faulty Work after Final Payment
SP-26	Texas State Sales Tax
SP-27	Separate Contracts
SP-28	Trench Safety
SP-29	Load Restrictions
SP-30	Notice to Proceed
SP-31	Payment for Materials on Hand

SP-32	Weighing and Measuring Equipment
SP-33	Progress Schedule
SP-34	Average Climatic Range
SP-35	Substantially Complete
SP-36	Submittals
SP-37	Geotechnical Information
SP-38	Sovereign Immunity
SP-39	Governing Law and Venue
SP-40	Third-Party Beneficiary
SP-41	Releases
SP-42	Independent Contractor
SP-43	Notice of Alleged Breach; Statutory Prerequisites
SP-44	Assignment
SP-45	Waiver of Attorney Fees
SP-46	Prompt Pay Act
SP-47	Payment
SP-48	Project Closeout
SP-49	Disclosure of Interested Parties
SP-50	Parkhill/RPR Authority and Duty
SP-51	Anti-Boycott Statutes

GENERAL CONDITIONS OF THE CONTRACT

Article	Title
GC-01.	Owner
GC-02.	Contractor
GC-03.	Architect/Engineer
GC-04.	Contract Documents
GC-05.	Subcontractor
GC-06.	Written Notice
GC-07.	Work
GC-08.	Deleted
GC-09.	Deleted
GC-10.	Layout of Work
GC-11.	Architect/Engineer Authority and Duty
GC-12.	Superintendence and Project Representation
GC-13.	Contractor Duty and Superintendence
GC-14.	Contractor Understanding
GC-15.	Character of Workers
GC-16.	Contractor Buildings
GC-17.	Sanitation
GC-18.	Shop Drawings
GC-19.	Preliminary Approval
GC-20.	Defects and Remedies
GC-21.	Changes and Alterations
GC-22.	Right of Architect/Engineer to Modify Methods and Equipment
GC-23.	Keeping Plans and Specifications Accessible
GC-24.	Ownership of Drawings
GC-25.	Adequacy of Design
GC-26.	Right of Entry

GC-27.	Collateral Contracts
GC-28.	Discrepancies and Omissions
GC-29.	Deleted
GC-30.	Protection Against Accident to Employees and the Public
GC-31.	Contractor Insurance
GC-32.	Time for Completion and Liquidated Damages
GC-33.	Price for Work
GC-34.	Bonds
GC-35.	Losses from Natural Causes
GC-36.	Protection of Adjoining Property
GC-37.	Protection Against Subcontractor, Laborer, Materialmen and Furnisher of Machinery, Equipment, and Supply Claims
GC-38.	Protection Against Royalties or Patented Invention
GC-39.	Laws and Ordinances
GC-40.	Assignment and Subletting
GC-41.	Time and Order of Completion
GC-42.	Extension of Time
GC-43.	Hindrances and Delays
GC-44.	Quantities and Measurements
GC-45.	Estimated Quantities
GC-46.	Partial Payments
GC-47.	Use of Completed Portions
GC-48.	Final Completion and Acceptance
GC-49.	Final Payment
GC-50.	Payment Withheld
GC-51.	Delayed Payments
GC-52.	Extra Work
GC-53.	Time of Filing Claims
GC-54.	Deleted
GC-55.	Abandonment by Contractor
GC-56.	Abandonment by Owner

FAA AC 150/5370-10H

CONTRACT PROVISION GUIDELINES FOR OBLIGATED SPONSOR AND AIRPORT IMPROVEMENT PROGRAM PROJECTS

PART 1 – GENERAL CONTRACT PROVISIONS

Section 10 Definition of Terms
Section 20 Proposal Requirements and Conditions
Section 30 Award and Execution of Contract
Section 40 Scope of Work
Section 50 Control of Work
Section 60 Control of Materials
Section 70 Legal Regulations and Responsibility to Public
Section 80 Execution and Progress
Section 90 Measurement and Payment

PART 2 – GENERAL CONSTRUCTION ITEMS
Item C-100 Contractor Quality Control Program (CQCP)
Item C-102 Temporary Air and Water Pollution, Soil Erosion, and Siltation Control
Item C-105 Mobilization

PART 4 – BASE COURSES
Item P-209 Crushed Aggregate Base Course

PART 3 – SITEWORK
Item P-101 Preparation/Removal of Existing Pavements
Item P-151 Clearing and Grubbing
Item P-154 Subbase Course
Item P-155 Lime-Treated Subgrade

PART 6 – FLEXIBLE PAVEMENTS
Item P-401 Asphalt Mix Pavement

PART 8 – SURFACE TREATMENTS
Item P-608-R Rapid Cure Seal Coat

PART 9– MISCELLANEOUS
Item P-602 Emulsified Asphalt Prime Coat
Item P-603 Emulsified Asphalt Tack Coat
Item P-610 Concrete for Miscellaneous Structures
Item P-620 Runway and Taxiway Marking

PART 11 – DRAINAGE
Item D-701 Pipe for Storm Drains and Culverts
Item D-752 Concrete Culverts, Headwalls, and Miscellaneous Drainage Structures

PART 12 – TURFING
Item T-901 Seeding
Item T-905 Topsoil

PART 13 – LIGHTING INSTALLATION
Item L-108 Underground Power Cable for Airports
Item L-110 Airport Underground Electrical Duct Banks and Conduits
Item L-125 Installation of Airport Lighting Systems

PARKHILL STANDARD SPECIFICATION
P140 - Temporary Barricades and Marking for Pavement Closure

APPENDICES
APPENDIX A – GEOTECHNICAL INVESTIGATION
APPENDIX B – CONSTRUCTION MANAGEMENT PLAN (CMP)
APPENDIX C – CONSTRUCTION SAFETY AND PHASING PLAN (CSPP)

ADVERTISEMENT FOR BIDS
NOTICE TO BIDDERS

Sealed Proposals addressed to the City Secretary will be received at the office of the City Secretary, City Hall, Midland, Texas until 2pm, Wednesday, August 9, 2023, for furnishing all necessary materials, machinery, equipment, superintendence, and labor for constructing certain improvements at Midland International Air & Space Port (MAF), Midland, Texas. These improvements are contained in Plans and Specifications entitled, "Midland International Air & Space Port, Taxiway E Reconstruction," dated June 2023.

Immediately following the closing time for receipt of Bids/Proposals, Bids/Proposals will be publicly opened and read aloud. Any Bid received after closing time will be returned unopened.

Principal items of Work are set forth in specific detail in the Proposal Section of these Specifications; however, Work items may be generally described as reconstruction of existing asphalt taxiway, installation of new drainage pipe headwalls, overall drainage improvements including concrete drainage flumes, and relocation of existing taxiway guidance sign.

Work will also include other miscellaneous materials, equipment, machinery, superintendence, and labor for constructing these improvements for MAF, Midland, Texas.

A Bid Proposal guaranty is to accompany the Bid, thereby guaranteeing the good faith of the Bidder and that Bidder will enter the written Contract. The guaranty is to amount to 5 percent of the total Bid and must be in the form of cash or certified check, issued by a bank satisfactory to the City of Midland, or a Bid Bond.

Bidders are expected to inspect Site of Work and inform themselves regarding all local conditions.

In all areas of employment, women will be afforded equal opportunity for employment. Employment of women shall not diminish the standards or requirements for employment of minorities.

This Project is subject to Minority Business Enterprise Contract Provisions, Foreign Trade Restrictions, Federal Debarment and Suspension, Drug-free Workplace, and other requirements stated in the Instructions to Bidders and other Sections of Project Specifications and Contract Documents.

Policy. It is the policy of the Department of Transportation (DOT) that disadvantaged business enterprises as defined in 49 CFR Part 26 shall have maximum opportunity to participate in performance of Contracts financed in whole or in part with Federal funds.

Buy American Provision. Proposed Contract is subject to the Buy American Provision under Section 9129 of the Aviation Safety and Capacity Expansion Act of 1990. Details of such requirement are contained in Specifications.

MAF treats Bidder/Offer compliance with good faith effort requirements as a matter of responsiveness.

Requirements of 49 CFR Part 26, Regulations of the U.S. Department of Transportation, apply to this Contract. It is the policy of MAF to practice nondiscrimination based on race, color, sex, or national origin in Award or performance of this Contract. All firms qualifying under this solicitation are encouraged to submit Bids/Proposals. Award of this Contract will be conditioned upon satisfying requirements of this bid Specification. These requirements apply to all Bidders/Offerors, including those who qualify as a DBE.

DBE contract goal of 9.8 percent has been established for this Contract. Bidder/Offeror shall make good faith efforts, as defined in Appendix A, 49 CFR Part 26, to meet contract goal for DBE participation in performance of this contract.

Successful Bidder/Offeror will be required to submit the following information:

(1) names and addresses of DBE firms that will participate in Contract;
(2) description of Work each DBE firm will perform;
(3) dollar amount of participation of each DBE firm participating;
(4) written documentation of Bidder/Offeror commitment to use a DBE subcontractor whose participation submits to meet Contract goal;
(5) written confirmation from DBE of participation in Contract as provided in commitment made under (4); and
(6) if Contract goal is not met, evidence of good faith efforts.

Successful Bidder or Offeror must provide written confirmation of participation from each DBE firm the Bidder/Offeror lists in their commitment. Bidder/Offeror must submit DBE written confirmation of participation within five days of receiving Owner notice to successful Bidder.

Information for Bidders, Proposal forms, Specifications, and Plans are on file in the office of the Director of Airports, MAF.

Downloaded documents (PDF file extension format) can be obtained from the PSC Info Exchange web site after registering as a Plan Holder with Parkhill via https://parkhill.com/projects-for-bid/ or by contacting Debbie German, Project Coordinator, at dagerman@parkhill.com. No cost or deposit required for downloaded documents.

CITY OF MIDLAND, TEXAS
Marcia Bentley-German, City Secretary

INSTRUCTIONS TO BIDDERS

IB-1. BID FORMS

Bid shall be submitted on Proposal form in the bound Specifications.

In addition to the completed Proposals, Bid forms shall include Bid Security, Financial Statement, and other specified documents. Failure to submit a complete Bid as specified will be considered as sufficient cause for rejection of the Bid.

IB-2. PREPARATION OF PROPOSALS

All blanks in the forms shall be filled in or marked "N.A." (Not Applicable) and all required information shall be included with Proposals. Bid prices shall be written in ink. Receipt of all Addenda issued shall be acknowledged in the space provided on the Addendum. Each Addendum received and the Bid Security shall be enclosed with Proposal. Proposal and accompanying documents shall be enclosed in a sealed envelope, addressed to the City Secretary, 300 N. Loraine, Midland, Texas 79701, marked "MAF Taxiway E Reconstruction" with name and address of Bidder also shown thereon. **If Sealed Bid is sent in a mailing envelope, outside of mailing envelope must also have same marking visible.**

IB-3. EXPERIENCE RECORD AND FINANCIAL STATEMENT

Experience Record included herein, shall be filled in, showing completed jobs, of a similar nature to the one covered by Proposal, and work in progress with Contract and Bond amounts and percent complete.

A sworn statement of the current financial condition of Bidder shall also be enclosed with Proposal, to provide Owner with information relative to the responsibility of Bidders and their ability to finance and construct the Work. This statement shall be enclosed with Proposal in a separate envelope and will be returned to Bidder upon return of Bid Security.

TxDOT prequalification can be submitted in lieu of a financial statement with bids; however, financial information may be required of the apparent low Bidder.

IB-4. BID SECURITY

Each Proposal must be accompanied by a Bid Bond, Certified Check, or cash in the amount of not less than 5 percent of the maximum Bid submitted, payable without recourse to the City of Midland, Texas. If a Bid Bond is submitted as Bid Security, it shall be executed by an approved surety company authorized to do business in the State of Texas and accepted according to the latest list of companies holding certificates of authority from the Secretary of the Treasury of the United States of America. Such Bid Security shall be so conditioned if Bidder is awarded Contract and unable or fails to furnish Performance and Payment Bonds and execute Contract within 10 days after date of Award, Security shall revert to Owner as compensation for damages which Owner suffers because of such failure by Bidder.

IB-5. PERFORMANCE AND PAYMENT BONDS

With execution and delivery of the Contract Documents, Contractor shall furnish, on the forms provided herein, Bonds, as required by the General Conditions, of 100 percent of the total Contract price, executed by an approved surety company authorized to do business in the State of Texas, and accepted according to the latest list of companies holding certificates of authority from the Secretary of the Treasury of the United States of America. Performance and Payment Bonds submitted shall be in compliance with Chapter 2253 of the Texas Government Code.

IB-6. INTERPRETATION OF BIDS

No Bid will be considered which fails to supply all information indicated, or which has any limitation or provisions placed upon it by Bidder. In case of a difference between the written words and the figures in Proposal, amount stated in written words will be considered as Bid price, without recourse on the part of Contractor. In case of ambiguity or lack of clearness in Proposal, Owner will adopt the most advantageous construction thereof or reject the Bid. Owner reserves the right to accept or reject any or all Bids, if it is deemed to be in the best interest of the public. Further, Owner reserves the right to reject any Bids because of irregularity or to waive such irregularity if such action is in the public interest.

IB-7. DISPOSITION OF BIDS

Owner expects to make Award of the Contracts as soon as possible after the opening of Bids, but specifically reserves the right to hold all Proposals for a period not to exceed 90 days, before making an Award. No Proposal, having been opened, may be withdrawn prior to expiration of this 90-day period. Bid Security of all but the successful Bidder will be returned upon making an Award.

Contract will be awarded to the responsible Bidder submitting the lowest Bid complying with the conditions of the Advertisement for Bidders and the Instructions to Bidders.

IB-8. EXAMINATION OF SITE, PLANS, AND SPECIFICATIONS

Before submitting Proposal, each Bidder shall have made a thorough examination of the Site of Work and of the Plans and Specifications, and shall become informed as to the location and nature of the proposed construction, labor conditions, and all other matters that may affect the cost and time of completion of the Work upon which he bids. Bidders shall make such investigations of the nature of the Project as deemed necessary and shall assume all responsibility for fully informing themselves of the character of materials which will be encountered. Submission of a Proposal shall be prima facie evidence that Bidder has made such an examination. Contact Chris Welch, Airport Facilities Manager (432.560.2200), to schedule a site examination visit.

IB-9. PREBID CONFERENCE

A prebid conference will be held at 2:00 p.m., Tuesday, July 25, 2023, in the Conference Room at Midland International Air & Space Port (MAF). At this time, all interested Bidders will be requested to appear and present any questions they may have pertaining to this Project. All Bidders are urged to attend Prebid Conference because they will be charged with notice of the matters discussed therein. Attendance to the Prebid Conference is NOT mandatory.

IB-10. INTERPRETATION OF SPECIFICATIONS PRIOR TO BIDDING

Any questions arising during the advertising period as to the meaning or intent of the Specifications will be answered by an Addendum which will be sent to all who have placed a deposit and/or furnished plans and Contract documents issued by Parkhill. Engineer shall receive requests for clarifications to Specifications and Plans at least three days prior to the date for receipt of Bids.

Receipt of each Addendum shall be acknowledged by Bidder in the space provided and each Addendum shall be enclosed with Proposal when it is submitted. All Addenda shall become a part of these Contract Documents.

IB-11. AVAILABILITY OF PLANS

A. For Bidders

All parties with an interest in the type of Work included in the Project covered by these documents, shall be given a reasonable opportunity to examine the documents and prepare a Bid or Sub-Bid. Documents may be examined without charge as noted in the Notice to Bidders.

Downloadable documents (PDF file extension format) can be obtained from the PSC Info Exchange web site after registering as a Plan Holder with Parkhill via https://parkhill.com/projects-for-bid/ or through Debbie German, Project Coordinator, at dagerman@parkhill.com. No cost or deposit required for downloaded documents.

B. For Contractor

Contractor will be furnished five sets of Specifications and Plans for his use during construction. This shall include all Plans and Specifications furnished to material suppliers and subcontractors but does not include the executed contract copies. Plans and Specifications for use during construction will be furnished directly only to Contractor. Contractor shall then distribute copies of Plans and Specifications to suppliers, subcontractors, or others, as required for proper execution of the Work.

Should additional sets of documents be desired, they may be purchased, by Contractor only, at the following prices, exclusive of postage or freight charges:

Plans and Specifications are $150.00 per set.

IB-12. SPECIAL PROVISIONS

Attention of Bidders is directed to SPECIAL PROVISIONS included in these documents for requirements concerning Scope of Work, labor, insurance, and similar subjects.

IB-13. PLANT LOCATION AND STORAGE AREA

Contractors bidding on the Work included in this Contract who desire to locate a material storage area or other similar facility on the airport property may secure such site, buildings or areas by direct negotiation with the Director of Airports, MAF, Midland, Texas.

IB-14. WITHDRAWAL OF PROPOSALS

Any Bidder, upon his or his authorized representative's written request, will be given permission to withdraw his Proposal not later than the time set for opening thereof. At the time of opening of Proposals, when such Proposal is reached, it will be returned to him unread.

IB-15. DISQUALIFICATION OF BIDDERS

Any one or more of the following causes may be considered as sufficient for the disqualification of Bidder and the rejection of Bid or Bids:

More than one Proposal for the same Work from an individual firm, partnership, or corporation under the same or different name.

Evidence of collusion among Bidders. Participants in such collusion may not receive recognition as Bidders for any future Work.

Unbalanced Proposals in which the prices for some items are out of proportion to the prices for other items.

Failure to submit a unit price for each item of Work for which a Bid price is required by Proposal.

Lack of competency as revealed by the financial statement submitted.

Lack of responsibility as shown by past work judged from workmanship and progress standpoints.

Uncompleted Work which, in the judgment of Owner, might hinder or prevent the prompt completion of additional Work if awarded.

For being in arrears on existing Contracts, in litigation with Owner, or having defaulted on a previous contract.

IB-16. MATERIAL GUARANTY

Before any Contract is awarded, Bidder may be required to furnish a complete statement of origin, composition, or manufacture of any or all materials proposed to be used in the construction of the Work, together with samples, which may be subjected to the tests provided for in these Specifications to determine their quality and fitness for the Work.

IB-17. DISADVANTAGED BUSINESS ENTERPRISE CONTRACT PROVISIONS

It is the policy of the Department of Transportation (DOT) that disadvantaged business enterprises as defined in 49 CFR Part 26 shall have the maximum opportunity to participate in the performance of Contracts financed in whole or in part with Federal funds under this agreement. Consequently, Bidder will be required to conform to the DBE requirements of 49 CFR Part 26.

IB-18. WAIVER

BY SUBMITTING A BID, EACH BIDDER AGREES TO AND DOES HEREBY WAIVE ANY CLAIM BIDDER HAS OR MAY HAVE AGAINST THE CITY OF MIDLAND, TEXAS, AND CITY EMPLOYEES, AGENTS, AND OFFICERS ARISING OUT OF OR IN ANY WAY CONNECTED WITH THE FOLLOWING:

1. ADMINISTRATION, EVALUATION, OR RECOMMENDATION OF ANY BID;
2. WAIVER OR DELETION OF ANY REQUIREMENT UNDER BID DOCUMENTS OR CONTRACT DOCUMENTS;
3. ACCEPTANCE OR REJECTION OF ANY BIDS; AND
4. AWARD OF CONTRACT.

BY SUBMITTING A BID, BIDDER ACKNOWLEDGES AN UNDERSTANDING OF ALL BIDDING DOCUMENT TERMS AND CONSENTS TO BIDDING PROCESS AND THE POSSIBILITY OF A NEGATIVE ASSESSMENT. BY SUBMITTING A BID, BIDDER ACKNOWLEDGES AND AGREES THAT THERE WAS/IS NO DISPARITY OF BARGAINING POWER BETWEEN BIDDER AND THE CITY OF MIDLAND, TEXAS.

BIDDER AGREES THIS IS THE INTENTIONAL RELINQUISHMENT OF THE LISTED PRESENTLY EXISTING KNOWN RIGHTS.

IB-19. WAIVER OF ATTORNEY FEES

BY EXECUTING THIS CONTRACT, CONTRACTOR AGREES TO WAIVE AND DOES HEREBY KNOWINGLY, CONCLUSIVELY, VOLUNTARILY AND INTENTIONALLY WAIVE ANY CLAIM IT HAS/MAY HAVE IN THE FUTURE AGAINST OWNER, REGARDING AWARD OF ATTORNEY FEES, WHICH ARE IN ANY WAY RELATED TO CONTRACT, OR CONSTRUCTION, INTERPRETATION OR BREACH OF CONTRACT. CONTRACTOR SPECIFICALLY AGREES IF CONTRACTOR BRINGS/COMMENCES ANY LEGAL ACTION OR PROCEEDING RELATED TO THIS CONTRACT, CONSTRUCTION, INTERPRETATION, VALIDITY, OR BREACH OF CONTRACT, INCLUDING BUT NOT LIMITED TO ANY ACTION PURSUANT TO PROVISIONS OF THE TEXAS UNIFORM DECLARATORY JUDGMENTS ACT (TEXAS CIVIL PRACTICE AND REMEDIES CODE SECTION 37.001, ET. SEQ., AS AMENDED), OR CHAPTER 271 OF THE TEXAS LOCAL GOVERNMENT CODE, CONTRACTOR AGREES TO ABANDON, WAIVE, AND RELINQUISH ANY AND ALL RIGHTS TO RECOVERY OF ATTORNEY FEES TO WHICH CONTRACTOR MIGHT OTHERWISE BE ENTITLED.

CONTRACTOR AGREES THIS IS VOLUNTARY AND INTENTIONAL RELINQUISHMENT AND ABANDONMENT OF A PRESENTLY EXISTING KNOWN RIGHT. CONTRACTOR ACKNOWLEDGES AN UNDERSTANDING OF ALL TERMS AND CONDITIONS OF CONTRACT. CONTRACTOR FURTHER ACKNOWLEDGES AND AGREES THAT WAS/IS NO DISPARITY OF BARGAINING POWER BETWEEN OWNER AND CONTRACTOR.

THIS SECTION SHALL NOT BE CONSTRUED OR INTERPRETED AS A WAIVER OF SOVEREIGN IMMUNITY.

CONTRACTOR AND OWNER ARE RELYING ON THEIR OWN JUDGMENT. EACH PARTY HAD THE OPPORTUNITY TO DISCUSS THIS CONTRACT WITH COMPETENT LEGAL COUNSEL PRIOR TO ITS EXECUTION.

BID BOND

THE STATE OF TEXAS)

SURETY'S NO._____

COUNTY OF MIDLAND)

KNOWN ALL MEN BY THESE PRESENTS, THAT_____

_____(hereinafter called "Principal"), as Principal, and_____

_____ (hereinafter called "Surety"), as Surety, are held and firmly bound unto the City of Midland, a home rule municipal corporation of Midland County (hereinafter called "Obligee"), in the amount of_____

_____DOLLARS ($____), for payment whereof said Principal and Surety bind themselves and their heirs, administrators, executors, successors and assigns, jointly and severally, firmly by these presents.

WHEREAS, Principal submitted a Bid or Proposal to enter a certain written contract with Obligee to perform all work associated with the MAF Taxiway E Reconstruction Project.

NOW, THEREFORE, THE CONDITION OF THIS OBLIGATION IS SUCH, if said Principal shall faithfully, enter such written Contract, then this obligation shall be void; otherwise to remain in full force and effect.

IT IS EXPRESSLY UNDERSTOOD AND AGREED if said Principal should withdraw its Bid any time after such Bid is opened and before official rejection of such Bid or, if successful in securing the Award thereof, said Principal should fail to enter into the Contract and furnish satisfactory Performance Bond and Payment Bond, Obligee, in either of such events, shall be entitled and hereby given the right to collect this Bid Bond as liquidated damages.

PROVIDED further if any legal action be filed upon this Bond venue shall lie in Midland County, Texas.

IN WITNESS WHEREOF, the said Principal and Surety do sign and seal this instrument, this day of _____, 20___.

_____	_____
Surety	
By _____	By _____
Address _____	Address _____
_____	_____

APPROVED AS TO FORM:

_____
City Attorney

NOTE: Attach Power of Attorney

PROPOSAL

TO: Mayor and City Council
City of Midland
Midland, Texas

Date: _____

To Whom it May Concern:

Pursuant to foregoing Notice to Bidders, undersigned Bidder hereby proposes to do all Work and furnish all necessary superintendence, labor, machinery, equipment, tools, and materials, and anything necessary to complete all Work Bid, as provided by attached Specifications, shown on Plans, and is bound to acceptance of this Proposal to execute Contract and Bonds per accompanying forms, performing and completing Work within time stated, and furnishing all required guarantees, for the following prices to-wit:

MAF TAXIWAY E RECONSTRUCTION

Item	Quantity Unit	Description of Item and Unit Prices	Total Amount
1	1 LS	Item C-100, Contractor Quality Control Program (CQCP), complete, per lump sum: _____Dollars and _____Cents ($_____)	$_____
2	1 LS	Item C-102, Temporary Air and Water Pollution, Soil Erosion, and Siltation Control, complete, per lump sum: _____Dollars and _____Cents ($_____)	$_____
3	1 LS	Item C-105, Contractor Mobilization, complete, per lump sum: _____Dollars and _____Cents ($_____)	$_____
4	6,610 SY	Item P-101, Pavement Removal (no payment for saw cutting along existing pavement as it is incidental to other work items), complete, per square yard: _____Dollars and _____Cents ($_____ _____)	$_____
5	1 LS	Item P-140, Temporary Barricades and Marking for Pavement Closure, complete, per lump sum: _____Dollars and _____Cents ($_____)	$_____

Item	Quantity Unit	Description of Item and Unit Prices	Total Amount
6	60 CY	Item P-152-4.1, Drainage Excavation and Trenching, complete, per cubic yard: _____Dollars and _____Cents ($_____ _____)	$_____
7	2,340 CY	Item P-152-4.4, Excavation, Grading, and Subgrade Preparation, complete, per cubic yard: _____Dollars and _____Cents ($_____ _____)	$_____
8	8,520 SY	Item P-152-4.5, Grading in Unpaved Areas, complete, per square yard: _____Dollars and _____Cents ($_____ _____)	$_____
9	7,150 SY	Item P-154-5.1, Subbase Course, complete, per square yard: _____Dollars and _____Cents ($_____ _____)	$_____
10	7,150 SY	Item P-209-5.1, Crushed Aggregate Base Course (14 inches thick), complete, per square yard: _____Dollars and _____Cents ($_____ _____)	$_____
11	1,670 TON	Item P-401-8.1a, Asphalt Surface Course Including Binder, 4-inch thickness, two lifts, complete, per ton: _____Dollars and _____Cents ($_____ _____)	$_____
12	2,150 GAL	Item P-602-5.1, Emulsified Asphalt Prime Coat (0.3 GAL/SY), complete, per gallon: _____Dollars and _____Cents ($_____ _____)	$_____

Item	Quantity Unit	Description of Item and Unit Prices	Total Amount
13	1,080 GAL	Item P-603-5.1, Emulsified Asphalt Tack Coat (0.15 GAL/ SY), complete, per gallon: _____Dollars and _____Cents ($_____ _____)	$_____
14	7,150 SY	Item P-608-R-8.1, Asphalt Surface Treatment, complete, per square yard: _____Dollars and _____Cents ($_____ _____)	$_____
15	300 SY	Item P-610-6.1, Concrete (drainage valley gutters construction only) is incidental for all other work items, complete, per square yard: _____Dollars and _____Cents ($_____ _____)	$_____
16	2,330 SF	Item P-620-5.2, Marking including Reflective Media (beads), complete, per square foot: _____Dollars and _____Cents ($_____ _____)	$_____
17	20 LF	Item D-701-5.1, 27-inch Reinforced Safety End Treatment, complete, per linear foot: _____Dollars and _____Cents ($_____ _____)	$_____
18	30 LF	Item D-701-5.2, 42-inch Reinforced Concrete Pipe, complete, per linear foot: _____Dollars and _____Cents ($_____ _____)	$_____
19	1 EA	Item D-752-5.1, 27-inch Concrete Reinforced Safety End Treatment, complete, per each: _____Dollars and _____Cents ($_____ _____)	$_____

Item	Quantity Unit	Description of Item and Unit Prices	Total Amount
20	2 EA	Item D-752-5.2, 42-inch Concrete Reinforced Safety End Treatment, complete, per each: _____Dollars and _____Cents ($_____ _____)	$_____
21	0.5 AC	Item T-901-5.1, Seeding, Fertilizing, and Watering, complete, per acre: _____Dollars and _____Cents ($_____ _____)	$_____
22	6,610 SY	Item T-905, Topsoil (Obtained on site or removed from stockpile), complete, per square yard: _____Dollars and _____Cents ($_____ _____)	$_____
23	400 LF	Item L-108-5.1, Trenching, Backfill, and Compact for PVC Conduit 24-inch minimum depth, complete, per linear foot: _____Dollars and _____Cents ($_____ _____)	$_____
24	100 LF	Item L-108-5.2, Trenching, Backfill, and Compact for PVC Conduit 40-inch minimum depth, complete, per linear foot: _____Dollars and _____Cents ($_____ _____)	$_____
25	400 LF	Item L-108-5.3, No. 8 AWG, 5kV, L-824, Type C Cable, Installed in Trench, Duct Bank or Conduit, complete, per linear foot: _____Dollars and _____Cents ($_____ _____)	$_____
26	490 LF	Item L-108-5.4, No. 6 AWG, Solid, Bare Copper Wire, Installed Above Duct Bank or Conduit, Including Connections/Terminations, complete, per linear foot: _____Dollars and _____Cents ($_____ _____)	$_____

Item	Quantity Unit	Description of Item and Unit Prices	Total Amount
27	490 LF	Item L-108-5.5, No. 6 AWG, Insulated, Stranded Equipment Bonding Installed in Duct Bank or Conduit, complete, per linear foot: _____Dollars and _____Cents ($_____ _____)	$_____
28	400 LF	Item L-110-5.1, Non-Encased Electrical Conduit, 2-inch, SCH 40, complete, per linear foot: _____Dollars and _____Cents ($_____ _____)	$_____
29	100 LF	Item L-110-5.2, Concrete-Encased Electrical Conduit, two 4-inch SCH 40, Including Duct Markers, complete, per linear foot: _____Dollars and _____Cents ($_____ _____)	$_____
30	2 EA	Item L-110-5.3, Concrete-Encased Electrical Conduit, two 4-inch SCH 80, including Duct Markers, complete, per each: _____Dollars and _____Cents ($_____ _____)	$_____
31	2 EA	Item L-125-1, Remove and Dispose Off Site Existing Taxiway Guidance Signage (Including all Underground Conduit, Wiring Connections, Boxes, and Concrete Pads), complete, per each: _____Dollars and _____Cents ($_____ _____)	$_____
32	5 EA	Item L-125-5.2, Remove and Save Five Existing Taxiway Edge Lights to Reuse, and Remove and Dispose, off site Existing underground conduit, wiring connections, boxes, concrete pads, and associated items, complete, per each: _____Dollars and _____Cents ($_____ _____)	$_____

Item	Quantity Unit	Description of Item and Unit Prices	Total Amount
33	2 EA	Item L-125-3, Three Module, Size 2, Style 2, Internally Lighted LED Guidance Sign, Base Mounted on Concrete-Encased Can, complete, per each: _____Dollars and _____Cents ($_____ _____)	$_____
34	10 EA	Item L-125-5.4, L-1861, LED Medium-Intensity Taxiway Edge Light (Blue), Base Mounted on Concrete-Encased L-867 Light Base, Complete with Transformer and PVC Transformer Support (Quantity Includes Reuse of Five Edge Light Fixtures Salvaged in Line Item 32), complete, per each: _____Dollars and _____Cents ($_____ _____)	$_____
		TOTAL BID	

Bidder is required to separate cost of materials to be incorporated into this Project. Such material costs are separated from other costs, so Bidder is a seller of such materials to the City. Bidder shall be required to issue a resale certificate on such materials in lieu of paying sales tax on such materials at time of purchase. The City will provide successful Bidder with a sales tax exemption certificate for such materials. Labor and materials charge shall be separated as follows:

BID

MATERIALS $_____

LABOR $_____

TOTAL BID **$_____**

Undersigned Bidder hereby confirms he/she visited the Site of Work and carefully examined Plans, Specifications, and Contract Documents pertaining to Work covered by this Bid, and prices bid herein are based on minimum wage rates included in Specifications.

Bidder certifies, by submission of this Proposal or acceptance of this Contract, neither Bidder nor Bidder's principals are presently debarred, suspended, proposed for debarment, declared ineligible, or voluntary excluded from participation in this transaction by any Federal department or agency. Bidder further agrees by submitting this Proposal, Bidder will include this clause without modification in all lower tier transactions, solicitations, Proposals, Contracts, and subcontracts. Where Bidder or any lower tier participant is unable to certify to this statement, it shall attach an explanation to this Proposal.

Contractor or subcontractor, by submission of offer/execution of a Contract, certifies it:

a. is not owned or controlled by one or more citizens or nationals of a foreign country included in the list of countries that discriminate against U.S. firms published by the Office of the United States Trade Representative (USTR);

b. has not knowingly entered into any contract or subcontract for this Project with a Contractor that is a citizen or national of a foreign country on said list or is owned or controlled directly or indirectly by one or more citizens or nationals of a foreign country on said list.

c. has not procured any product nor subcontracted for the supply of any product for use on the Project that is produced in a foreign country on said list.

Unless restrictions of this clause are waived by the Secretary of Transportation in accordance with 49 CFR 30.17, no Contract shall be awarded to Contractor or subcontractor who is unable to certify to the above. If Contractor knowingly procures or subcontracts for supply of any product or service of a foreign country on said list for use on Project, the Federal Aviation Administration may direct, through the sponsor, cancellation of Contract at no cost to the Government.

Further, Contractor agrees if awarded a Contract resulting from this solicitation, it will incorporate this provision for certification without modification in each Contract and in all lower tier subcontracts. Contractor may rely upon the certification of a prospective subcontractor unless it has knowledge that the certification is erroneous.

Contractor shall provide immediate written notice to sponsor if Contractor learns its certification or that of a subcontractor was erroneous when submitted or has become erroneous by reason of changed circumstances. Subcontractor agrees to provide immediate written notice to Contractor, if at any time it learns that its certification was erroneous by reason of changed circumstances.

This certification is a material representation of fact upon which reliance was placed when making the award. If later determined Contractor or subcontractor knowingly rendered an erroneous certification, the Federal Aviation Administration may direct, through the sponsor, cancellation of Contract or subcontract for default at no cost to the Government.

Nothing contained in the foregoing shall be construed to require establishment of a system of records to render, in good faith, certification required by this provision. Knowledge and information of a contractor is not required to exceed that normally possessed by a prudent person in the ordinary course of business dealings.

This certification concerns a matter within the jurisdiction of an agency of the United States of America and making of a false, fictitious, or fraudulent certification may render maker subject to prosecution under Title 18, United States Code, Section 1001.

Bidder hereby agrees to commence Work under this Contract within 10 days of a date specified in written "Notice to Proceed" and to complete Work within the consecutive calendar day framework noted in Contract. Bidder further agrees to pay as liquidated damages, the sum of $1,000.00 for each consecutive calendar day beyond each phase of days allowed as hereinafter provided in Article 32 of the General Conditions.

Bidder acknowledges receipt of the following addendum:_____

_____

Enclosed with this Proposal is a Cashier's or Certified Check for_____

_____ Dollars ($_____)

or, a Proposal Bond in the sum of 5 percent of Greatest Amount Bid Dollars ($5 percent of Greatest Bid), which it is agreed shall be collected and retained by Owner as liquidated damages in the event the Proposal is accepted by the Owner within 90 days after date advertised for the reception of Bids and undersigned fails to execute Contract or required bonds with Owner, under conditions hereof, within 10 days after date said Proposal is accepted; otherwise, said check or Bond shall be returned to undersigned upon demand.

_____
Contractor

(Seal if Bidder is a Corporation)

By_____

_____
Address

NOTE: Complete all blanks in this and accompanying forms and include proper Bid Security.

CONTRACT

STATE OF TEXAS

COUNTY OF MIDLAND

THIS CONTRACT is made and entered into this _____ day of _____ 20___, by and between the **CITY OF MIDLAND, TEXAS**, a home rule municipal corporation ("***Owner***"), and _____ _____, ("***Contractor***").

WITNESS: That for and in consideration of payments and agreements hereinafter mentioned, to be made and performed by Owner, and under conditions expressed in the bond bearing even date herewith, Contractor hereby agrees to commence and complete construction of items of work included in this Project, described as reconstruction of existing asphalt taxiway, installation of new drainage pipe headwalls, overall drainage improvements including concrete drainage flumes, and relocation of an existing taxiway guidance sign.

Work will also include other miscellaneous materials, equipment, machinery, superintendence, and labor for constructing improvements for Midland International Air & Space Port (MAF).

These improvements are shown on Plans and Specifications entitled MAF Taxiway E Reconstruction" dated June 2023. Plans and Specifications are hereby incorporated herein by reference for all legal purposes and shall apply to this Contract as if fully set forth herein.

This Contract shall include all extra work in connection therewith. All work performed hereunder shall be in accordance with those certain General Conditions and Special Provisions, attached hereto, and hereby incorporated herein by referenced for all legal purposes and shall apply to this Contract as if fully set forth herein. Contractor shall, at own proper cost and expense, furnish all materials, supplies, machinery, equipment, tools, superintendence, labor, insurance, and other accessories and services necessary to complete said construction, in accordance with conditions and prices stated in Proposal attached hereto, and in accordance with all General Conditions, Special Provisions, and Plans, which includes all maps, plats, blueprints, and other drawings and printed or written explanatory matter thereof, and Specifications therefor, as prepared by Parkhill ("***Architect/Engineer***"), each of which has been identified by endorsement of Contractor and Engineer thereon, together with Contractor's written Proposal, General Conditions, Special Provisions, Performance Bond, and Payment Bond hereto attached; all of which are made a part hereof and collectively evidence and constitute the entire agreement between the parties hereof.

Contractor hereby agrees to commence work under this Contract within 10 days of a date specified in written "Notice to Proceed" and to complete work under Base Bid identified on plans within [number] calendar days from Notice to Proceed.

Contractor further agrees to pay as liquidated damages the sum of one thousand Dollars ($1,000) for each consecutive calendar day beyond days allowed as hereinafter provided in Article 32 of General Conditions.

Owner agrees to pay Contractor from current funds for performance of this Contract in accordance with Proposal submitted therefor, subject to additions and deductions, as provided in Specifications, and to make payments on account thereof as provided therein.

BY EXECUTING THIS CONTRACT, CONTRACTOR AGREES TO WAIVE AND DOES HEREBY WAIVE ANY CLAIM CONTRACTOR HAS/MAY HAVE AGAINST THE CITY OF MIDLAND, TEXAS, AND PARKHILL, REGARDING AWARD OF ATTORNEY FEES, WHICH ARE IN ANY WAY RELATED TO CONTRACT, OR CONSTRUCTION, INTERPRETATION OR BREACH OF CONTRACT. CONTRACTOR SPECIFICALLY AGREES IF CONTRACTOR BRINGS/COMMENCES ANY LEGAL ACTION OR PROCEEDING RELATED TO THIS CONTRACT, CONSTRUCTION, INTERPRETATION, VALIDITY, OR BREACH OF THIS CONTRACT, INCLUDING BUT NOT LIMITED TO ANY ACTION PURSUANT TO PROVISIONS OF THE TEXAS UNIFORM DECLARATORY JUDGMENTS ACT (TEXAS CIVIL PRACTICE AND REMEDIES CODE SECTION 37.001, *ET SEQ*., AS AMENDED), CONTRACTOR AGREES TO WAIVE AND RELINQUISH ANY AND ALL RIGHTS TO RECOVERY OF ATTORNEY FEES TO WHICH CONTRACTOR MIGHT OTHERWISE BE ENTITLED.

CONTRACTOR AGREES THIS IS INTENTIONAL RELINQUISHMENT OF A PRESENTLY EXISTING KNOWN RIGHT. CONTRACTOR ACKNOWLEDGES AN UNDERSTANDING OF ALL TERMS AND CONDITIONS OF THIS CONTRACT.

By execution of this Contract, Contractor hereby represents and warrants to the City of Midland, Texas, that Contractor has read and understood the Contract.

This Contract shall be governed by laws of the State of Texas. Venue of any suit, right, or cause of action arising under or in connection with this Contract shall lie exclusively in Midland County, Texas. All payments and performance under or connected to this Contract shall be deemed to have occurred exclusively in Midland County, Texas.

IN WITNESS WHEREOF, the parties to these presents have executed this Agreement in the year and day first above written.

OWNER:

CITY OF MIDLAND, TEXAS **ATTEST:**

By _____ **By** _____
Lori Blong, Mayor Marcia Bentley-German, City Secretary

CONTRACTOR:

By_____
Signature

Name, Title: _____
Print

Complete Address:

_____

_____

STATE OF _____

COUNTY OF _____

Before me, _____, on this day, personally
Notary

appeared, _____ (Name of Signer), who

□ is known to me

□ proved to me on the oath of _____
Witness

□ proved to me through _____
Document Description

to be the person whose name is subscribed herein and acknowledged to me execution of the same for purposes and consideration herein expressed.

Given under my hand and seal of office this

_____ day of _____, A.D., _____.
Day Month Year

Notary Seal

_____
Signature of Notary Officer

PERFORMANCE BOND
SUBMITTED IN COMPLIANCE WITH CHAPTER 2253 OF THE TEXAS GOVERNMENT CODE

STATE OF TEXAS §

COUNTY OF MIDLAND §

KNOW ALL MEN BY THESE PRESENTS: That we, _____of the City of _____, County of _____, and State of _____, as Principal, and _____ _____ hereinafter called "Surety," are held and firmly bound unto the City of Midland, Texas, a home rule municipal corporation of Midland County, Texas, (hereinafter called the City-Obligee), in the penal sum of _____ _____ DOLLARS, ($_____) lawful money of the United States, well and truly to be paid to the City of Midland, Texas, for payment whereof said Principal and Surety bind themselves and their heirs, administrators, executors, successors, and assigns, jointly and severally, firmly by these presents.

WHEREAS, Principal has entered a certain written Contract with the Owner-Obligee, dated the __ day of _____ 20___, to the MAF Taxiway E Reconstruction for the Midland Airpark, Midland, Texas specifically including in the Scope of this Work and Bond, additional maintenance guaranty provisions set forth in Contract conditions, which Contract is hereby referred to and made a part hereof as fully and to the same extent as if copied at length herein, as well as the Principal's primary obligation to perform according to Plans and Specifications.

NOW, THEREFORE, THE CONDITION OF THIS OBLIGATION IS SUCH, if said Principal shall faithfully perform Work in accordance with Plans, Specifications, Instructions to Bidders, General and Special Conditions, and other Contract Documents, including any Addendums thereto, then this obligation shall be void; otherwise, to remain in full force and effect.

PROVIDED further if any legal action be filed upon this Bond venue shall lie in Midland County, State of Texas.

PROVIDED further this Performance Bond is submitted in compliance with Chapter 2253 of the Texas Government Code.

Surety, for value received, stipulates and agrees no change, extension of time, alteration, or addition to terms of the Contract, or to the Work performed thereunder, or Plans, Specifications or Drawings accompanying the same, or any assignment of the Contract as may be provided for in Instructions to Bidders, shall in any way affect its obligation on this Bond, and it does waive notice of any such change, extension of time, alteration, or addition to the terms of the Contract, assignment thereof, or to the Work to be performed thereunder.

IN WITNESS WHEREOF said Principal and Surety have signed and sealed this instrument, this ____ day of _____, 20__.

_____	_____
Contractor	Surety
By _____	By _____
	(Title)

NOTE: If signed by an officer of Surety Company, there must be on file a certified extract from by-laws showing this person has authority to sign such obligation. If signed by an Attorney in Fact, Owner must be furnished with a copy of Power of Attorney for their files.

PAYMENT BOND
SUBMITTED IN COMPLIANCE WITH CHAPTER 2253 OF THE TEXAS GOVERNMENT CODE

STATE OF TEXAS §

COUNTY OF MIDLAND §

KNOW ALL MEN BY THESE PRESENTS: That we, _____of the City of _____, County of _____, and State of _____ _____, as principal, and _____, hereinafter called "Surety," are held and firmly bound unto the City of Midland, Texas, a home rule municipal corporation of Midland County, Texas, (hereinafter called "City-Obligee"), in the penal sum of _____ DOLLARS, ($___ _____) lawful money of the United States, well and truly to be paid to the City of Midland, for payment whereof said Principal and Surety bind themselves and their heirs, administrators, executors, successors, and assigns, jointly and severally, firmly by these presents.

WHEREAS, Principal has entered into a certain written contract with Owner-Obligee, dated the ____ day of _____ 20__, to the MAF Taxiway E Reconstruction for the Midland International Air & Space Port, Midland, Texas which Contract is hereby referred to and made a part hereof as fully and to the same extent as if copied at length herein.

NOW, THEREFORE, the condition of this obligation is if said Principal shall pay all claimants supplying labor and material to him or a subcontractor in the prosecution of the work provided for in said contract, then this obligation shall be null and void; otherwise, to remain in full force and effect.

PROVIDED further if any legal action be filed upon this Bond venue shall lie in Midland County, State of Texas.

PROVIDE further this Payment Bond is submitted in compliance with Chapter 2253 of the Texas Government Code.

Surety, for value received, stipulates and agrees no change, extension of time, alteration, or addition to terms of this Contract, or to Work performed thereunder, or Plans, Specifications, or Drawings accompanying the same, or any assignment of Contract as may be provided in Instructions to Bidders, shall in any way affect its obligation on this Bond, and it does waive notice of any such change, extension of time, alteration, or addition to terms of the Contract, assignment thereof, or to Work to be performed thereunder.

WITNESS our hands this the _____ day of _____, 20___.

_____	_____
Contractor	Surety
By_____	By _____
	(Title)

NOTE: If signed by an officer of Surety Company, there must be on file a certified extract from by-laws showing this person has authority to sign such obligation. If signed by an Attorney in Fact, Owner must be furnished with a copy of Power of Attorney for their files.

CERTIFICATE OF INSURANCE

TO: CITY OF MIDLAND
MIDLAND INTERNATIONAL AIR & SPACE PORT
MIDLAND, TEXAS

Date _____

Type of Project: MAF Taxiway E Reconstruction

THIS IS TO CERTIFY THAT _____
(Name of Insured)

is, at the date of this certificate, insured by this Company with respect to business operations hereinafter described, for types of Insurance and in accordance with provisions of standard policies used by this Company, and further hereinafter described. Exceptions to standard policy noted on reverse side hereof.

TYPE OF INSURANCE			
Policy No	Effective	Expires	Limits of Liability
Workmen's Compensation		Public	
1 person $_____		Liability	
1 accident $_____		Contingent	
1 person $_____		Liability	
1 accident $_____			
Property Damage			
Builder's Risk			
Automobile			
Other			

SAMPLE ONLY
SUCCESSFUL
CONTRACTOR
SHALL PROVIDE
CERTIFICATE OF
INSURANCE FROM
HIS CARRIER

Foregoing Policies (do) (do not) cover all sub-contractors.

Locations Covered:_____

Description of Operations Covered:_____

The noted policies either in the body thereof or by appropriate endorsement provide they may not be changed or cancelled by insurer in less than the legal time required after insured receives written notice of such change or cancellation, or, in case there is no legal requirement, in less than five days after insured receives such written notice.

SEND EIGHT COPIES OF THIS
CERTIFICATE TO OWNER

_____
(Name of Insurer)

By _____

Title _____

Phone _____

NOTE: Name CITY OF MIDLAND and PARKHILL as additional insureds on required insurance policies.

EXPERIENCE RECORD

List of Projects, like that covered by Proposal, Bidder successfully completed:

Amount of Contract Award	Type of Work	Date Completed	Name and Address of Owner

PACKET 10.34 July 11, 2023

List of Projects Bidder is now engaged in completing:

Amount of Contract Award	Type of Work	Percent Completed	Name and Address of Owner

PACKET 10.35 July 11, 2023

List of Surety Bonds in force on uncompleted work:

Amount of Contract Award	Amount of Bond	Name of Surety Company

_____
Bidder

Print Name:_____

_____

_____
Business Address

EQUIPMENT SCHEDULE

Bidder should list major equipment available and serviceable for use on this Work.

Portion of Work Bidder proposes to sublet, if any:

Dated this _____ day of _____, 20____.

By _____

Title _____

CONTRACT ASSURANCE

Contractor will ensure the following clause is placed in every DOT-assisted Contract and subcontract:

Contractor or subcontractor shall not discriminate based on race, color, national origin, or sex in performance of this Contract. Contractor shall carry out applicable requirements of 49 CFR Part 26 in Award and administration of DOT-assisted Contracts. Failure by Contractor to carry out requirements is a material breach of this Contract which may result in termination of this Contract or such other remedy as recipient deems appropriate. This may include, but is not limited to:

1. Withholding monthly progress payments;
2. Assessing sanctions;
3. Liquidated damages; and/or
4. Disqualifying Contractor from future bidding as non-responsible.

PROMPT PAYMENT

Prime Contractor agrees to pay each subcontractor under this Prime Contract for satisfactory performance of Contract no later than 30 working days from receipt of each payment Prime Contractor receives from the City of Midland. Prime Contractor agrees further to return retainage payments to each subcontractor within 30 working days after subcontractor's work is satisfactorily completed. Any delay or postponement of payment from above referenced time frame may occur only for good cause following written approval of the City of Midland. The clause applies to both DBE and non-DBE subcontractors.

For purposes of this Section, a subcontractor's work is satisfactorily completed when all tasks called for in subcontract have been accomplished and documented as required by the City of Midland. When the City of Midland makes an incremental acceptance of a portion of a prime contract, work of a subcontractor covered by that acceptance is deemed satisfactorily completed.

Contractor will not be reimbursed for Work performed by subcontractors unless and until Contractor ensures subcontractors are promptly paid for Work they have performed.

Contractor failure to comply with requirements of DBE Plan shall constitute a material breach of this Contract. In such a case, the City of Midland reserves the right to terminate Contract; to deduct amount of DBE goal not accomplished by DBE from money due or to become due Contractor, not as a penalty but as liquidated damages to the City of Midland or such other remedy/remedies as the City of Midland deems appropriate.

CITY OF MIDLAND DEPARTMENT OF AIRPORTS
DBE POLICY STATEMENT

Section 26.1, 26.23 Objectives/Policy Statement

The City of Midland, Owner, and Operator of Midland International Air & Space Port, herein referred to as MAF, established a Disadvantaged Business Enterprise (DBE) program in accordance with regulations of the U.S. Department of Transportation (DOT), 49 CFR Part 26. MAF received Federal financial assistance from the Department of Transportation and as a condition of receiving this assistance, MAF signed an assurance to comply with 49 CFR Part 26.

It is the MAF policy to ensure DBEs, as defined in Part 26, have an equal opportunity to receive and participate in DOT-assisted Contracts. It is also our policy to:

1. ensure nondiscrimination in Award and administration of DOT-assisted Contracts;
2. create a level playing field on which DBEs can compete fairly for DOT-assisted Contracts;
3. ensure DBE Program is narrowly tailored in accordance with applicable law;
4. ensure only firms who fully meet 49 CFR Part 26 eligibility standards are permitted to participate as DBEs;
5. help remove barriers to participation of DBEs in DOT-assisted Contracts; and
6. assist development of firms who can successfully compete in the marketplace outside the DBE program.

An MAF staff person has been delegated as the DBE Liaison Officer. In that capacity, appointed staff is responsible for implementing all DBE program aspects. Implementation of the DBE program is accorded the same priority as compliance with all other legal obligations incurred by MAF in financial assistance agreements with the Department of Transportation.

MAF disseminated this policy statement to the City Council of the City of Midland, Texas and all components of the organization. We distributed this statement to DBE and non-DBE business communities who perform Work for us on DOT-assisted Contracts. This is accomplished via inclusion in all our Bid Documents.

Justine Ruff, Director of Airports

MONITORING PAYMENTS TO DBEs AND NON-DBEs

MAF undertakes ongoing monitoring of prime payments to subcontractors over the course of any covered contract. Such monitoring activities will be accomplished as follows:

1. Prime Contractors must submit monthly proof of prompt payment to Airport.
2. DBELO will monitor prompt payment to subcontractors via review of cancelled checks and/or accounts payable ledgers submitted with monthly reports.
3. DBELO will verify checks payable to subcontractors are dated within prompt payment period.
4. DBELO may also contact DBE subcontractors by phone/email to confirm receipt of payment within prompt payment period.

Airport requires prime contractors to maintain records/documents of payment to subcontractors, including DBEs, for a minimum of three years unless otherwise provided by applicable record retention requirements for Airport financial assistance agreement, whichever is longer. These records will be made available for inspection upon request by any authorized representative of the MAF or DOT. This reporting requirement extends to all DBE and non-DBE subcontractors.

INFORMATION TO BE SUBMITTED (26.53(B)):

MAF treats Bidder/Offeror compliance with good faith effort requirements as a matter of responsiveness.

Requirements of 49 CFR Part 26, Regulations of the U.S. Department of Transportation, apply to this Contract. It is MAF policy to practice nondiscrimination based on race, color, sex, or national origin in award or performance of this Contract. All firms qualifying under this solicitation are encouraged to submit Bids/Proposals. Award of this Contract will be conditioned upon satisfying Bid Specification requirements applying to all Bidders/Offerors, including those who qualify as a DBE. A DBE Contract goal of 9.8 percent has been established for this Contract. Bidder/Offeror shall make good faith efforts, as defined in Appendix A, 49 CFR Part 26, to meet the Contract goal for DBE participation in performance of this Contract.

Types of actions to support good faith efforts at meeting Contract goal for DBE participation (not intended as an all-inclusive list and other methods by Bidder may be relevant in documenting good faith effort:

1. Have DBE subcontractors attend Prebid Meeting
2. Documentation of notices sent to potential DBE subcontractors requesting interest in bidding.
3. Documentation of emails sent to potential DBE subcontractors requesting interest in bidding.
4. Documentation (dates and times) of phone calls made to potential DBE subcontractors informing them of the Project and soliciting an interest in bidding. This should include follow-up calls to support aggressively attempting to obtain DBE participation.

Good faith effort documentation must be included with Proposal submitted.

INCLUDE WITH PROPOSAL:

1. Form 1: Disadvantaged Business Enterprise (DBE) Utilization, (signed by Bidder/Offeror);
2. Form 2: Letter of Intent (for each DBE firm). Note: *DBE firm signature not required at time of proposal submission*; and
3. Completed Bidder Information Sheet.

UPON AWARD OF CONTRACT:

Successful Bidder/Offeror will be required to submit the following information within five days of bid opening:

(1) names and addresses of DBE firms who will participate in the Contract;
(2) description of Work each DBE firm will perform;
(3) dollar amount of participation for each DBE firm participating;
(4) written documentation of Bidder/Offeror commitment to use a DBE subcontractor whose participation meets Contract goal;
(5) written confirmation from DBE of Contract participation as provided in commitment made under (4); and
(6) upon unmet Contract goal, evidence of good faith efforts. Successful Bidder/Offeror must submit DBE written confirmation of participation within five days after Bid Opening.

Midland International Air & Space Port

To all Bidders for AIP-funded projects for Midland International Air & Space (MAF):

Any company desiring to submit a bid on an AIP grant project for MAF, must complete a Bidder Information Sheet that includes:

- Name of Firm;
- Address of Firm;
- Age of Firm;
- If Firm is a certified Disadvantaged Business Enterprise (DBE); and
- Amount of annual gross receipts.

Before Contract is awarded, companies must also submit Demonstration of Good Faith Efforts, Form 1: DBE Utilization, and Form 2: Letter of Intent for each DBE subcontractor. If DBE goal percentage is met, complete one Form 1 and a separate Form 2 for each DBE subcontractor. If not met, complete Form 1 and submit documentation of Good Faith Efforts (see 49 CFR Part 26, Appendix A) to support percentage accomplished.

Upon Airport acceptance of Bid, submit the following information to MAF Disadvantage Business Enterprises Liaison Officer (DBELO) before Project starts:

- Commitments made to all subcontractors (DBE/non-DBE): MAF Form 2: Letter of Intent or TxDOT Form 4901; and
- Proof of DBE certification of all DBE subcontractors.

Once Project starts, submit monthly to the DBELO a Monthly Progress Report (MAF form or TxDOT Forms 4903 or 4904) of actual dollar amount paid to DBE subcontractors.

Call 432.560.2200 for questions. Thank you for your time and consideration regarding this matter.

Sincerely,

MAF Liaison Officer
Disadvantage Business Enterprise

Encl

FORMS 1 AND 2: DEMONSTRATION OF GOOD FAITH EFFORTS

Form 1: Disadvantaged Business Enterprise (DBE) Utilization

Undersigned Bidder/Offeror has satisfied bid specification requirements as follows:

☐ Bidder/Offeror met DBE contract goal:

Bidder/Offeror is committed to a minimum of 9.82% DBE utilization on this contract.

☐ Bidder/Offeror has not met DBE contract goal:

Bidder/Offeror is committed to a minimum of _____ % DBE utilization on this contract and submitted documentation demonstrating good faith efforts.

Legal name of Bidder/Offeror's firm: _____

Bidder/Offeror Representative: _____

Name/Title: _____

_____ _____

Signature Date

Form 2: Letter of Intent

Note: Authorized representative (AR) named herein must be a vested individual with authority to make contracting decisions on behalf of the firm.

Name of Bidder/Offeror's firm: _____

Name/title of firm's AR: _____

Phone: _____ Email: _____

Name of DBE firm: _____

Name/title of DBE firm's AR: _____

Address: _____

City: _____ State: ____Zip: _____

Phone: _____ Email: _____

Work to be performed by DBE firm: _____

Description of Work	NAICS	Dollar Amount/%*	Dealer/Manufacturer**

**Percentage to be used only in negotiated procurements, including design-build contracts.*
***For material suppliers only, indicate if DBE is a manufacturer or regular dealer as defined by §26.55.*

Undersigned Bidder/Offeror is committed to utilizing the named DBE firm for work described herein. Total expected dollar value of this work is $_____. Bidder/Offeror understands if awarded contract/agreement resulting from this procurement, it must enter a subcontract with identified DBE firm representative of listed type and amount of work. Bidder/Offeror understands upon submitting this form with bid/offer, it may not substitute/terminate listed DBE without following procedures of 49 CFR Part 26, §26.53.

_____ _____

Signature of Bidder/Offeror's Authorized Representative Date

Undersigned DBE affirms it is ready, willing, and able to perform amount and type of work as described herein and is properly certified to be counted for DBE participation, therefore.

_____ _____

Signature of DBE's Authorized Representative Date

If Bidder/Offeror does not receive award of prime contract, all representations in this Letter of Intent shall be null and void.

Submit this page for each DBE subcontractor.

Midland International Air & Space Port

Department of Airports

BIDDER INFORMATION SHEET

Firm Name: _____

_____

Address: _____

_____

_____

Age of Firm: _____

Is your Firm a Certified Disadvantaged Business Enterprise (DBE)? **YES** ☐
NO ☐

Mark the category of your Firm's Annual Gross Receipts.

- ☐ **Less than $1 million.**
- ☐ **More than $1 million, less than $5 million.**
- ☐ **More than $5 million, less than $10 million.**
- ☐ **More than $10 million, less than $15 million.**
- ☐ **More than $15 million.**

DBE/NON-DBE MONTHLY PROGRESS REPORT FOR MAF

Project: _____ AIP Grant No.: _____

Contractor: _____ Contract Amount: _____

DBE Goal: _____ DBE Goal Dollars: _____

Contractor DBE Status (DBE/non-DBE): _____ Reporting Month: (Month/Year): _____

Vendor Number	Name of Prime/Subcontractor DBE or Non-DBE	*D/N	**Disadvantaged Group	Type of Work	***Total $ Amt Paid for Work Performed (Prime & Sub; DBE & Non-DBE)	**** $ Amt Paid to Non-DBE Firm this Pay Period	***** $ Amt Paid to DBE Firm this Pay Period

* All payments to DBE and Non-DBE firms are required to be reported (D=DBE; N=non-DBE).

** If firm is a DBE, report Disadvantaged Group the DBE firm falls under: BA=Black American; HA=Hispanic American; NA=Native American; SAA=Subcont. Asian American; APA=Asian Pacific American; NMW=Non-Minority Women; O=Other.

*** Goal/commitment progress report amount and/or race-neutral amount. Do not subtract non-DBE/second-tier subcontractors and haulers from this column.

**** Report amount paid to non-DBE firm or sub.

***** Report amount paid to DBE firm or sub.

If using a non-DBE hauling firm that leases from DBE truck owner-operators, payments made to each owner-operator must be reported separately. Report amount of payment DBE subcontractors paid to non-DBE subcontractors/haulers.

Submission of this report for periods of negative DBE activity is required. This report is required monthly until entirety of project specified is completed.

I hereby certify the above is a true and correct statement of amounts paid to the DBE or Non-DBE firms listed above.

Signature: _____ Date: _____

Company Official

🛠**This report must be submitted with monthly request for payment.**

DAVIS BACON WAGE DETERMINATION

"General Decision Number: TX20230002 01/06/2023

Superseded General Decision Number: TX20220002

State: Texas

Construction Types: Heavy and Highway

Counties: Armstrong, Carson, Crosby, Ector, Irion, Lubbock, Midland, Potter, Randall, Taylor and Tom Green Counties in Texas.

HEAVY & HIGHWAY CONSTRUCTION PROJECTS

Note: Contracts subject to the Davis-Bacon Act are generally required to pay at least the applicable minimum wage rate required under Executive Order 14026 or Executive Order 13658. Please note that these Executive Orders apply to covered contracts entered into by the federal government that are subject to the Davis-Bacon Act itself, but do not apply to contracts subject only to the Davis-Bacon Related Acts, including those set forth at 29 CFR 5.1(a)(2)-(60).

If the contract is entered into on or after January 30, 2022, or the contract is renewed or extended (e.g., an option is exercised) on or after January 30, 2022:	. Executive Order 14026 generally applies to the contract. . The contractor must pay all covered workers at least $16.20 per hour (or the applicable wage rate listed on this wage determination, if it is higher) for all hours spent performing on the contract in 2023.
If the contract was awarded on or between January 1, 2015 and January 29, 2022, and the contract is not renewed or extended on or after January 30, 2022:	. Executive Order 13658 generally applies to the contract. . The contractor must pay all covered workers at least $12.15 per hour (or the applicable wage rate listed on this wage determination, if it is higher) for all hours spent performing on that contract in 2023.

The applicable Executive Order minimum wage rate will be adjusted annually. If this contract is covered by one of the Executive Orders and a classification considered necessary for performance of work on the contract does not appear on this wage determination, the contractor must still submit a conformance request.

Additional information on contractor requirements and worker protections under the Executive Orders is available at http://www.dol.gov/whd/govcontracts.

Modification Number	Publication Date
0	01/06/2023

SUTX2011-002 08/02/2011

	Rates	Fringes
CEMENT MASON/CONCRETE FINISHER (Paving & Structures)	$ 13.55 **	
ELECTRICIAN	$ 20.96	
FORM BUILDER/FORM SETTER		
Paving & Curb	$ 12.36 **	
Structures	$ 13.52 **	
LABORER		
Asphalt Raker	$ 12.28 **	
Flagger	$ 9.30 **	
Laborer, Common	$ 10.30 **	
Laborer, Utility	$ 11.80 **	
Work Zone Barricade Servicer	$ 10.30 **	
POWER EQUIPMENT OPERATOR:		
Asphalt Distributer	$ 14.87 **	
Asphalt Paving Machine	$ 13.40 **	
Broom and Sweeper	$ 11.21 **	
Crane, Lattice Boom 80 Tons or Less	$ 16.82	
Crawler Tractor Operator	$ 13.96 **	
Excavator, 50,000 lbs or less	$ 13.46 **	
Front End Loader Operator, Over 3 CY	$ 12.77 **	
Front End Loader, 3CY or less	$ 12.28 **	
Loader/Backhoe	$ 14.18 **	

```
     Mechanic....................$ 20.14
     Milling Machine.............$ 15.54 **
     Motor Grader,  Rough........$ 16.15 **
     Motor Grader, Fine..........$ 17.49
     Pavement Marking Machine....$ 16.42
     Reclaimer/Pulverizer........$ 12.85 **
     Roller, Asphalt.............$ 10.95 **
     Roller, Other...............$ 10.36 **
     Scraper.....................$ 10.61 **
     Spreader Box................$ 12.60 **

Servicer.........................$ 13.98 **

Steel Worker (Reinforcing).......$ 13.50 **

TRUCK DRIVER
     Lowboy-Float................$ 14.46 **
     Single Axle.................$ 12.74 **
     Single or Tandem Axle Dump..$ 11.33 **
     Tandem Axle Tractor with
     Semi........................$ 12.49 **
----------------------------------------------------------------

WELDERS - Receive rate prescribed for craft performing
operation to which welding is incidental.

================================================================

** Workers in this classification may be entitled to a higher
minimum wage under Executive Order 14026 ($16.20) or 13658
($12.15).  Please see the Note at the top of the wage
determination for more information.

Note: Executive Order (EO) 13706, Establishing Paid Sick Leave
for Federal Contractors applies to all contracts subject to the
Davis-Bacon Act for which the contract is awarded (and any
solicitation was issued) on or after January 1, 2017.  If this
contract is covered by the EO, the contractor must provide
employees with 1 hour of paid sick leave for every 30 hours
they work, up to 56 hours of paid sick leave each year.
Employees must be permitted to use paid sick leave for their
own illness, injury or other health-related needs, including
preventive care; to assist a family member (or person who is
like family to the employee) who is ill, injured, or has other
health-related needs, including preventive care; or for reasons
resulting from, or to assist a family member (or person who is
like family to the employee) who is a victim of, domestic
violence, sexual assault, or stalking.  Additional information
on contractor requirements and worker protections under the EO
is available at
```

https://www.dol.gov/agencies/whd/government-contracts.

Unlisted classifications needed for work not included within the scope of the classifications listed may be added after award only as provided in the labor standards contract clauses (29CFR 5.5 (a) (1) (ii)).

The body of each wage determination lists the classification and wage rates that have been found to be prevailing for the cited type(s) of construction in the area covered by the wage determination. The classifications are listed in alphabetical order of ""identifiers"" that indicate whether the particular rate is a union rate (current union negotiated rate for local), a survey rate (weighted average rate) or a union average rate (weighted union average rate).

Union Rate Identifiers

A four letter classification abbreviation identifier enclosed in dotted lines beginning with characters other than ""SU"" or ""UAVG"" denotes that the union classification and rate were prevailing for that classification in the survey. Example: PLUM0198-005 07/01/2014. PLUM is an abbreviation identifier of the union which prevailed in the survey for this classification, which in this example would be Plumbers. 0198 indicates the local union number or district council number where applicable, i.e., Plumbers Local 0198. The next number, 005 in the example, is an internal number used in processing the wage determination. 07/01/2014 is the effective date of the most current negotiated rate, which in this example is July 1, 2014.

Union prevailing wage rates are updated to reflect all rate changes in the collective bargaining agreement (CBA) governing this classification and rate.

Survey Rate Identifiers

Classifications listed under the ""SU"" identifier indicate that no one rate prevailed for this classification in the survey and the published rate is derived by computing a weighted average rate based on all the rates reported in the survey for that classification. As this weighted average rate includes all rates reported in the survey, it may include both union and non-union rates. Example: SULA2012-007 5/13/2014. SU indicates the rates are survey rates based on a weighted average

calculation of rates and are not majority rates. LA indicates the State of Louisiana. 2012 is the year of survey on which these classifications and rates are based. The next number, 007 in the example, is an internal number used in producing the wage determination. 5/13/2014 indicates the survey completion date for the classifications and rates under that identifier.

Survey wage rates are not updated and remain in effect until a new survey is conducted.

Union Average Rate Identifiers

Classification(s) listed under the UAVG identifier indicate that no single majority rate prevailed for those classifications; however, 100% of the data reported for the classifications was union data. EXAMPLE: UAVG-OH-0010 08/29/2014. UAVG indicates that the rate is a weighted union average rate. OH indicates the state. The next number, 0010 in the example, is an internal number used in producing the wage determination. 08/29/2014 indicates the survey completion date for the classifications and rates under that identifier.

A UAVG rate will be updated once a year, usually in January of each year, to reflect a weighted average of the current negotiated/CBA rate of the union locals from which the rate is based.

WAGE DETERMINATION APPEALS PROCESS

1.) Has there been an initial decision in the matter? This can be:

* an existing published wage determination
* a survey underlying a wage determination
* a Wage and Hour Division letter setting forth a position on a wage determination matter
* a conformance (additional classification and rate) ruling

On survey related matters, initial contact, including requests for summaries of surveys, should be with the Wage and Hour National Office because National Office has responsibility for the Davis-Bacon survey program. If the response from this initial contact is not satisfactory, then the process described in 2.) and 3.) should be followed.

With regard to any other matter not yet ripe for the formal

process described here, initial contact should be with the Branch of Construction Wage Determinations. Write to:

Branch of Construction Wage Determinations
Wage and Hour Division
U.S. Department of Labor
200 Constitution Avenue, N.W.
Washington, DC 20210

2.) If the answer to the question in 1.) is yes, then an interested party (those affected by the action) can request review and reconsideration from the Wage and Hour Administrator (See 29 CFR Part 1.8 and 29 CFR Part 7). Write to:

Wage and Hour Administrator
U.S. Department of Labor
200 Constitution Avenue, N.W.
Washington, DC 20210

The request should be accompanied by a full statement of the interested party's position and by any information (wage payment data, project description, area practice material, etc.) that the requestor considers relevant to the issue.

3.) If the decision of the Administrator is not favorable, an interested party may appeal directly to the Administrative Review Board (formerly the Wage Appeals Board). Write to:

Administrative Review Board
U.S. Department of Labor
200 Constitution Avenue, N.W.
Washington, DC 20210

4.) All decisions by the Administrative Review Board are final.

==========

END OF GENERAL DECISIO"

SPECIAL PROVISIONS

SP-1 SCOPE OF WORK

Work to be accomplished under these Specifications including Plans shall consist of:

1.1 Principal items of Work are set forth in specific detail in the Proposal Section of these Specifications; however, Work may be generally described as reconstruction of existing asphalt taxiway, installation of new drainage pipe headwalls, overall drainage improvements including concrete drainage flumes, and relocation of existing taxiway guidance sign.

1.2 Work will also include other miscellaneous materials, equipment, machinery, superintendence, and labor for constructing these improvements for the Midland International Air & Space Port (MAF), Midland, Texas.

1.3 Contractor shall furnish all labor, materials, and equipment necessary to complete Work called for in these Specifications and shown on the Plans.

1.4 Payment for various items of Work will be made as specified under various payment articles of Technical Sections.

SP-2 CONTRACT DOCUMENTS

All Work covered by this Contract shall be done in accordance with Contract Documents described in the General Conditions. Drawings included in documents consist of the plans entitled ”MAF Taxiway E Reconstruction,” dated June 2023.

Bidders shall be thoroughly familiar with all Drawings and Specifications. Contractor shall be responsible for satisfactory completion of all Work shown on Drawings or specified.

Intent of Plans and Specifications is to prescribe a complete Work or improvement which Contractor undertakes to do in full compliance with Plans, Specifications, Special Provisions, Proposal, and Contract. Contractor shall do all Work including such additional, extra, and incidental Work considered necessary to complete the Project in a satisfactory and acceptable manner, as provided in Plans, Proposal, and Contract. Unless otherwise provided in Specifications, Special Provisions, or Contract, Contractor shall furnish all materials, equipment, tools, labor, and incidentals necessary to prosecute completion of Work.

Contract Documents are complementary and that called for by any one entity shall be as binding as if called for by all. In case of conflict between Contract Documents, priority of interpretation shall be in the following order:

- Signed Contract,
- Performance Bond,
- Special Bonds (if any),
- Proposal,
- Special Provisions,
- Notice to Bidders,
- Instructions to Bidders,
- Technical Specifications,
- Plans, and
- General Conditions of Contract.

PACKET 10.54 July 11, 2023

SP-3 TIME AND ORDER OF COMPLETION

Contractor is permitted to prosecute certain portions of Work in order and manner of own choosing to the best interest of the Project; however, Work shall be conducted in such manner and with such materials, equipment, and labor as required to ensure completion in accordance with Plans and Specifications within time stated in Proposal and Contract. Contractor shall furnish Parkhill with proposed progress schedule and Parkhill shall approved schedule before Work is commenced on Project.

Contractor is reminded approved material submittals are required before incorporation of materials into this Project. To avoid delays in Work progress, provide complete information to Parkhill as early as possible for review and approval.

Contractor will be required to execute various portions of the Project in phases to maintain usage of airport facilities as well as safety during the entire Project. Contractor will be allowed to develop own phasing plan which will meet phasing intent shown on Plans. Contractor phasing plan will be subject to Parkhill approval.

Other Contractors may perform Work for Owner in the same general area as that covered under this Contract. Contractor shall be expected to coordinate his Work with Work of other Contractors as required to ensure all Work can be carried out with the least possible interference with operation of other contractors or Owner. Contractor coordination with other contractors shall require Parkhill approval. Owner reserves the right to control and direct sequence of operations in areas others will be working. Provision shall be made for other contractors to have suitable space to Work, store materials, as well as access to these areas.

Contractor shall schedule Work well in advance of actual operations and keep Parkhill advised of this schedule so close coordination can be maintained with Director of Airports and other contractors. Portions of taxiways and runways will be closed as required for proper execution of Work, but at least three days' notice will be required before closing any portion of a taxiway or runway. Director of Airports will file Notice to Airmen (NOTAMs) required for various construction operations.

When closing portions of airfield for construction, keep time closed to a minimum. Contractor is required to provide, install, and maintain approved closed runway/taxiway markings in accordance with the latest FAA Advisory Circular 150/5370 and other applicable FAA regulations. No separate measurement or payment shall be made for closed runway or taxiway marking. Coordinate all operations through Parkhill and Director of Airports.

SP-4 LIMITATION OF OPERATION

Complete each item of Work without delay. In no instance shall Contractor be permitted to transfer forces from uncompleted Work to new Work without Parkhill permission. Contractor is required to submit a schedule of operations to Parkhill for approval. Contractor shall not commence new Work to the prejudice of Work already started.

Contractor shall take all necessary precautions to ensure operating aircraft and passenger safety as well as that of Contractor equipment and personnel. Give special considerations to flight schedules and routes taken by equipment traveling within Airport area. Contractor shall provide all such equipment with a flag on a staff attached to equipment, so flag is readily visible. Flag shall be not less than 3 feet square, checkered pattern of international orange-and-white squares, not less than 1-foot on each side. Contractor shall estimate all difficulties to be encountered. Keep equipment not actually in operation clear of landing areas. Personnel shall not enter areas of Airport where aircraft are operating without specific permission.

Nighttime construction activities are not permitted without prior approval of Parkhill and Director of Airports. If required and permitted, nighttime construction activities shall be as noted on Plans and coordinated, through Parkhill, with Director of Airports. During nighttime construction, Contractor shall provide all equipment traveling within Airport area with a flashing light that is always visible and operational.

Coordinate all operations through Parkhill and Director of Airports, so no interference with aircraft traffic on active runways, taxiways, or aprons will result from Contractor operations. Construction activities are not allowed within safety areas of any active runway/taxiway unless approved by Parkhill and Director of Airports.

- Taxiway safety area is the area within 90 feet of the centerline of any taxiway/taxilane.
- Runway safety area is the area within 250 feet of the centerline of any runway when aircraft are operating under Visual Flight Rule (VFR, clear weather) conditions, or within 570 feet of the centerline of any runway when aircraft are operating under Instrument Flight Rule (IFR, inclement weather) conditions.

As required, Contractor shall maintain flagpersons to direct construction traffic to cross or travel along any active taxiway, apron, or runway. Direct traffic away from these facilities when possible and never allow traffic to cross an active runway, taxiway, or apron without proper clearance.

Contractor shall schedule Work well in advance of actual operations and keep Parkhill advised of this schedule so close coordination can be maintained with Director of Airports. Aprons, runways, and taxiways will be closed as required for proper execution of Work as provided in previous Articles.

Contractor shall exert every effort to maintain safety of aircraft traffic and be acquainted with rules and regulations concerning aircraft traffic safety. Maintain FAA Advisory Circular 150/5370-2G, "Operational Safety on Airports during Construction," requirements. Violations of safety rules by Contractor workers shall result in discharge of such workers in accordance with General Conditions. Continued violations of safety rules and regulations by Contractor, after Parkhill or MAF notify Contractor of such violations, shall constitute grounds for suspending Contractor operations until steps are taken to insure a safe operation.

Contractor's field office and material storage area may be located inside secure area of Airport but outside safety areas of taxiways/runways near construction. Contractor shall provide an area for parking all equipment not used for construction purposes, as well as for parking employee vehicles. This area shall be located away from the Airport operational area (AOA) in an area approved by Parkhill and Director of Airports. No employee or other unauthorized vehicles will be allowed within the AOA. If Contractor needs field office outside of secure area, Contractor can install temporary security fencing around office site. Airport must approve security fence.

Contractor shall utilize existing vehicle gates for employees and subcontractors. Contractor shall be responsible for allowing only authorized personnel to enter the AOA through this gate. Contractor shall always control entrance through the gate by employees or subcontractors entering/exiting the gate.

Hauling routes shall not be along/across any paved airport street, road, apron, taxiway, or runway without specific written authorization from Parkhill and Director of Airports. Any damage incurred by Contractor equipment shall be repaired by and at Contractor expense and as required by Parkhill and Director of Airports.

Contractor shall maintain pavement surfaces of runways, taxiways, and aprons, allowed to be used as hauling routes, in a clean condition, suitable for use by aircraft, as determined by Director of Airports.

Successful Bidder is subject to a pre-award review by Office of Compliance and Security, Equal Opportunity Division, Federal Aviation Administration, to determine Contractor's previous compliance status.

Contractor is subject to a preconstruction conference to discuss phasing and Project safety control after award of Contract.

SP-5 CONSTRUCTION ACTIVITY

When construction activity is performed on/adjacent to AOA, the following rules and regulations apply unless otherwise authorized by Airport Operations. **Contractor must have all picture-badged supervisors fingerprinted. Fingerprinting cost is $70.00 per person, paid by Contractor**.

5-1 AOA Badge: At least one supervisor with an AOA picture badge must always be present with any group of unbadged personnel.

5-2 Escorts: All escorts performed by Contractor within AOA must be accomplished by picture-badged personnel operating a vehicle marked by a 3- by 3-foot orange-and-white checkered flag. Traffic must always adhere to haul routes (see Subarticle 5-3). Only authorized airport personnel are to perform escorts off established haul routes.

5-3 Haul Routes: Establishment of AOA haul routes must be authorized through Airport Operations. Contractor shall furnish, erect, maintain, and remove flags for delineation of haul routes. Criteria of establishing perimeter of a haul route and restricted areas will be as follows:

A. Green flags will prominently mark either side of haul route at intervals to easily define route.
B. Yellow flags will prominently mark a boundary 500 feet adjacent to a runway centerline to delineate restricted areas during poor visibility as determined by Airport Operations.
C. Red flags will prominently mark a boundary 250 feet adjacent to a runway centerline to indicate entry is prohibited unless specifically authorized by Airport Operations.
D. Haul Routes that cross/come within 153 feet of a taxiway must have a flagperson present to control vehicular traffic.
E. No haul route may come within 1,000 feet from end of a runway unless specifically authorized by Airport Operations.

5-4 Cranes: Any construction activity utilizing a crane or other hoisting device shall have prior written approval of FAA. Contractor shall be responsible for filing prescribed forms for airspace clearance in accordance with Part 77 of Federal Aviation Regulations. Applications for airspace clearance must be submitted at least 30 days before construction activities. To avoid construction delays, Contractor is urged to timely file prescribed forms. Airspace clearance from FAA must be approved before erection of crane or other hoisting device. The following information is required:

A. Location of equipment.
B. Maximum extendable height.
C. Duration of use.
D. Daily hours of operation.

Top of crane must be marked by a 3- by 3-foot orange-and-white checkered flag and lowered at night and during periods of poor visibility as directed by Airport Operations. Cranes which exceed a height of 149 feet must be approved in writing by the FAA (FAA Form 7460-1). Contractor shall notify Parkhill at least 48 hours before erecting crane.

5-5 Restricted Areas: Construction prohibited in these areas unless authorized by Airport Operations:

A. Within 90 feet of a taxiway or apron taxiway centerline.
B. Within 250 feet parallel to runway centerline. (500 feet during poor visibility as determined by Airport Operations.)
C. Within 1,000 feet of end of the runway.
D. Within certain areas about runway to cause interference with navigational equipment.

5-6 Trenches and Excavations: No trenches or excavations allowed within these areas:

A. Within 250 feet parallel to runway centerline.
B. Within 90 feet parallel to taxiway or apron taxiway centerline.
C. Within 1,000 feet of end of runway.

EXCEPTION: Authorization considered on a case-by-case basis by Airport Operations.

5-7 Stockpiles of Material: No stockpiled material allowed within these areas:

A. Within 500 feet parallel to runway centerline.
B. Within 90 feet parallel to taxiway or apron taxiway centerline.
C. Within 1,000 feet of end of runway.

EXCEPTION: Authorization considered on a case-by-case basis by Airport Operations.

5-8 Escorts, Badges, and Permits: When construction activity is performed on/adjacent to AOA and access onto apron required, the following rules will apply unless otherwise authorized by Airport Operations:

A. Escorts: Airport Operations must escort Contractor vehicles and equipment. Contractor must observe all rules and regulations.

EXCEPTION: Vehicles displaying a Permanent AOA Access decal do not require an escort while operating on ramps.

B. AOA Badges: Contractor personnel will display AOA Identification Badge.
C. AOA Access Permit: Contractor vehicles will display AOA Access Permit or Temporary AOA Access Permit.

EXCEPTION: Construction equipment (tractors, dump trucks, cranes, etc.) are not required to display an AOA Access Permit.

5-9 Protection of Airfield Areas: Utilize these procedures to prevent inadvertent entry by aircraft or vehicles into closed sections of taxiways, runways, or aprons. Contractor shall provide all materials and labor to furnish, erect, maintain, and remove these items as subsidiary to other items in Project.

A. When any taxiway or other AOA is closed, area will be protected by cones and flashing lights set up at entrances to closed areas.
B. Appropriate NOTAMs will be issued on closure and associated maintenance or construction activity.
C. Centerline and edge lights will be turned off, removed, obliterated, or disconnected as dictated by circumstances requiring closure.
D. All excavations in existing pavement areas (e.g. mudjacking repairs) must have hole protected by cones and flashing lights, in addition to cones and lights marking closed area.
E. Major excavations (constructing new taxiways, ramps, other construction activity) or major repairs of existing taxiway/runway will be protected by 10-inch-wide by 8-foot-long plastic, FAA-approved barricades (striped orange and white) with at least two red-flashing lights on top of each barricade.

F. In some cases, taxiway centerline striping will be obliterated, and a temporary displaced centerline provided.
G. All airfield activities must be continually coordinated through Airport Operations Supervisor.

SP-6 AFFIDAVIT OF BILLS PAID

Before Owner's Final Acceptance of this Project, Contractor shall execute an Affidavit that all bills for labor, materials, and incidentals incurred in construction of these improvements, are paid in full, including any retainage, and no claims are pending, of which Contractor is notified.

SP-7 CALENDAR DAY

Time for Project completion and liquidated damages shall be in accordance with provisions of General Conditions, Article GC-32 - Time for Completion and Liquidated Damages. A calendar day is every day shown on the calendar.

SP-8 PROTECTION OF PROPERTY

Contractor shall exercise care to prevent damage to all structures, above or below ground, including buildings, fences, pipelines, utilities, roads, etc., publicly or privately owned, and including Work performed by others. Contractor is responsible for locating all underground facilities damaged by proposed construction.

Contractor shall be responsible for all damage done to either public or private property during construction except as specifically provided otherwise in these Specifications.

Known existing underground utilities and structures are shown on Plans. Locations are believed reasonably accurate but not guaranteed.

Contractor shall take all steps necessary to protect existing facilities during construction to assure continuous operation of lights for runways and taxiways which will be open for night operations.

SP-9 ELECTRIC POWER AND NATURAL GAS

Contractor shall provide electrical, natural gas, and other fuel requirements and pay for electricity, gas, or fuel consumed during Project construction. Contractor shall construct own service lines and such construction shall be in strict accordance with all applicable codes and laws.

SP-10 LINES AND GRADES

Parkhill will provide Contractor with horizontal control points and a benchmark for vertical control. Contractor shall do all construction staking. References to lines and grades as established by Parkhill shall reference these control points.

Parkhill will provide Contractor with all necessary information relating to control points set by Parkhill. Contractor will be responsible for laying out Work. Parkhill will check Contractor's grade control and major layouts at Parkhill's discretion, but this check will not relieve Contractor of responsibility of correctly locating line and grade in accordance with Plans and Specifications.

Parkhill will take all measurements necessary to determine amount of Work performed under various items payment is provided. When necessary, Work will be suspended to permit this Work, but such suspension will be as brief as practicable, and Contractor shall be allowed no extra compensation.

Contractor shall be certain as to accuracy of all measurements before constructing any permanent structure and not take advantage of any errors made in laying out Work. Contractor shall scrupulously preserve such stakes/markings as Parkhill may set for either Parkhill or Contractor guidance. In case of Contractor or employee negligence resulting in destruction of such stakes/markings, an amount equal to the cost of replacing same may be deducted from subsequent estimates due Contractor, at Parkhill discretion.

SP-11 WATER FOR CONSTRUCTION

Contractor shall provide for water requirements and pay for all water consumed during Project construction. Contractor shall arrange and pay for connections to existing water mains, fire hydrants, and piping/hauling water to the point where water is required.

SP-12 MATERIAL TESTS

Specifications require various tests on construction materials. In general, Contractor shall bear the cost of all material tests required before approval of material, source, or mix design. City will bear the cost of all passing commercial laboratory tests required for acceptance during construction of improvements and Contractor shall bear the cost of all failing construction tests.

Where only small amounts of material are used or where compliance with Specifications determined by visual inspection, no tests are required. Certificates of compliance required on all materials not tested.

All materials proposed used may be tested any time during preparation and use. If, after trial, sources of supply approved do not furnish a product of uniform quality or product from any source proves unacceptable any time, Contractor shall furnish approved material from another source.

SP-13 BARRICADES, SIGNS, AND HAZARD MARKINGS

Contractor shall provide, erect, and maintain all necessary barricades, signs, danger signals, and lights for protection of Work and the safety of the public for passengers and aircraft. Before closing existing apron, runways, or taxiways, place warning signs for air traffic at such locations, visible day and night. Any movement of Contractor vehicles or equipment on/across aprons or taxiways shall carry FAA standard markings or flags. Movement of other vehicles responsible to Contractor shall be under escort, as specified in Article SP-5-2.

Barricades for runways, taxiways, and aprons closed to traffic shall consist of 10-inch-wide by 8-foot-long plastic, FAA-approved barricades. Each barricade shall have reflective striping and a red flashing light on each end. Barricades shall be spaced with no more than 10-foot clearance between flashing lights attached to successive barricades. Obstructions shall be illuminated at night. Proper illumination of obstructions is critical to safe operation of aircraft on the Airport. All warning lights shall be equipped with photocell controls to automatically turn on lights at night and off at daytime. Contractor shall check lights daily (and each night) to assure batteries/power cells are working. Immediately replace or repair any lights found out-of-order, flashing weakly, or in otherwise less than acceptable operating condition. Parkhill may suspend Work on Project if Contractor's warning lights are not maintained. A $25.00/day charge will be assessed Contractor for each light found inoperative by Owner's personnel or representatives.

SP-14 PREVENTION OF AIR AND WATER POLLUTION

Contractor shall use suitable precaution to minimize air and water pollution during Work progress. Contractor shall meet all EPA requirements concerning air and water pollution. Contractor shall implement a Stormwater Pollution Prevention Plan (SWPPP) as required by Plans and Specifications.

SP-15 PUBLIC CONVENIENCE AND SAFETY

Materials stored on the Airport shall be placed and Work always conducted to cause no greater obstruction to air and ground traffic than Parkhill consider necessary. In protecting operational areas, minimum clearances maintained for runways shall agree with Part 77 of Federal Aviation Regulations. During Project construction, Contractor shall also maintain operational safety on Airport in accordance with the FAA Advisory Circular 150/5370-2G, "Operational Safety on Airports during Construction" and SW5200.5B, "Airport Safety during FAA-funded Airport Construction and FAA Facilities Maintenance." No runway, taxiway, apron, or roadway shall be closed or opened except by express permission from Parkhill and Director of Airports.

Contractor shall be responsible for maintaining pavement free of all rocks, gravel, dirt, and other debris where hauling is permitted on/across any active roadway, apron, runway, taxiway, or areas temporarily closed subject to opening on short notice. Contractor shall immediately remove all rocks, gravel, dirt, or other debris.

SP-16 FINAL CLEANING

As each intermediate phase of Work is completed and before opening any portion of any airfield apron, roadway, runway, or taxiway, Contractor shall be responsible for cleaning construction site and adjacent pavement as specified.

Upon completion of Work and before Acceptance and Final Payment is made, Contractor shall remove from the site all machinery, equipment, surplus and discarded materials, rubbish, and temporary structures. Material cleared from site and deposited on adjacent property will not be considered satisfactorily disposed. Cleanup cost shall be included as a part of cost of various items of Work involved with no direct compensation made for this Work.

SP-17 INSURANCE

Contractor shall not begin Work under this Contract until all insurance is obtained as required in General Conditions of Contract, proof of same is furnished to Owner, and Owner approves. All insurance required for this Project shall name the City of Midland and Parkhill as additional insureds.

Contractor shall obtain and deliver to Owner, an Owner's Protective or Contingent Public Liability Insurance Policy naming the City of Midland and Parkhill as additional insureds and amount of policy shall be as follows:

- $1,000,000 for injuries, including accidental death, to one or more persons and subject to noted limit for each person;
- $1,000,000 total limit for all damages arising out of bodily injuries to or death of two or more persons in any one accident;
- limit not less than $1,000,000 for all damages arising out of injury to or destruction of property in any one accident, and subject to that limit per accident; and
- $2,000,000 total (or aggregate) limit for all damages arising out of injury to or destruction of property during policy period.

Before Work on any Contract or subcontract begins, Contractor(s) and subcontractor(s) shall submit seven certificates to Owner for approval covering each insurance policy carried and offered as evidence of compliance with noted requirements, signed by an authorized representative of insurance company, setting forth:

- name and address of insured;
- location of operations to which insurance applies,
- number of policy and type(s) of insurance in force thereunder on date borne by such certificate;
- policy expiration date and limit(s) of liability thereunder on date borne by such certificate;
- statement insurance of type afforded by policy applies to all operations of whatever character, undertaken by insured during performance of Contract, provided such operations are required in performance of Contract and
- provision the policy may be canceled only by mailing written notice to named insured at address shown in this policy stating when, not less than 10 days thereafter, and cancellation of such policy shall be effective, with copy to Owner of letter of intent.

These certificates will become a part of Contract Documents and must be included with Contract Documents before execution by the City of Midland. Coverages specified herein apply to all Contractor operations in connection with this Work, including automobile and other vehicles.

Contractor's insurance shall cover self, all subcontractors, and sub-subcontractors. All other sublevels of Contractors shall provide copies of proof of insurance if not covered by the general Contractor.

Contractor shall provide a Waiver of Subrogation in favor of the City of Midland and Parkhill on Worker's Compensation and Employee Liability Insurance, Contractor's Public Liability and Property Damage Liability Insurance, and Automobile Insurance.

SP-18 REMOVAL AND DISPOSAL OF STRUCTURES, UTILITIES, AND OBSTRUCTIONS

All materials and debris specified to be disposed by Contractor shall become Contractor's property and Contractor shall properly dispose off Airport property.

SP-19 CONFORMITY WITH PLANS AND ALLOWABLE DEVIATIONS

Finished surfaces shall conform to lines, grades, cross sections, and dimensions. Any deviation from Plans required by exigencies of construction shall be determined and authorized by Parkhill in writing.

SP-20 REMOVAL OF DEFECTIVE AND UNAUTHORIZED WORK

All Work rejected or condemned shall be repaired or, if not satisfactorily repaired, removed and replaced at Contractor expense. Contractor shall immediately remove materials not conforming to Specification requirements from site of Work and replaced with satisfactory material at Contractor expense.

Work done beyond that shown on Plans, or as given, except as herein provided, without proper inspection, or any extra or unclassified Work done without written authority and prior agreement in writing as to prices, will be done at Contractor risk and considered unauthorized and, at Parkhill option, may not be measured, paid for, and may be ordered removed and replaced at Contractor expense.

Upon Contractor failure to repair satisfactorily or remove and replace, if so directed, rejected, unauthorized, or condemned Work or materials immediately after receiving formal notice from Parkhill, Owner may recover for such defective Work or materials on Contractor bond, or by action in court having proper jurisdiction over such matters, or may employ labor, equipment, and satisfactorily repair or remove and replace such Work and charge cost of same to Contractor, which will be deducted from any money due.

SP-21 DISPUTED CLAIMS FOR EXTRA WORK

In case Contractor deems extra compensation is due for Work on materials not clearly covered in Contract nor ordered by Parkhill as an extra, Contractor shall notify Parkhill in writing of intention to make a claim for such extra compensation before beginning Work on which claim is based and shall afford Parkhill every facility for keeping actual cost of Work. Contractor's failure to give such notification or afford Parkhill proper facilities for keeping strict account of actual costs, shall constitute a waiver of claim for such extra compensation. Contractor's filing of such notice and keeping of costs by Parkhill shall not in any way be construed to prove claim validity. When Work is completed, Contractor shall, within 10 days, file a claim for extra compensation with Parkhill, who will present it to Owner for consideration.

SP-22 FEDERAL PARTICIPATION

Pursuant to provisions of the Act of Congress known as the Airport Improvement Program of 1982 as amended, the United States Government may pay a portion of improvement cost. This Act of Congress provides construction Work and labor in each state shall be in accordance with laws of that state subject to FAA inspection and approval and in accordance with rules and regulations made pursuant to said Act. Construction Work, therefore, will be subject to such inspection by FAA Administrator or agents as deemed necessary to meet with requirements when Federal funds are used, but such inspection will in no sense make the Federal Government a party to this Contract nor interfere with rights of either party to Contract.

SP-23 INDEMNIFICATION

CONTRACTOR SHALL INDEMNIFY AND HOLD HARMLESS AND DEFEND OWNER, PARKHILL, AND ALL OFFICERS, AGENTS, AND EMPLOYEES FROM ALL SUITS, ACTIONS, CLAIMS, DAMAGES, PERSONAL INJURIES, ACCIDENTAL DEATH, LOSSES, PROPERTY DAMAGE, AND EXPENSES OF ANY CHARACTER WHATSOEVER, INCLUDING REASONABLE ATTORNEY FEES, BROUGHT FOR/ON ACCOUNT OF ANY INJURIES/DAMAGES RECEIVED/SUSTAINED BY ANY PERSON(S)/PROPERTY, ON ACCOUNT OF ANY NEGLIGENT ACT OF CONTRACTOR, AGENTS, EMPLOYEES, OR ANY SUBCONTRACTOR, IN EXECUTION, SUPERVISION, AND OPERATIONS GROWING OUT OF OR IN ANY WAY CONNECTED WITH PERFORMANCE OF THIS CONTRACT, AND CONTRACTOR IS REQUIRED TO PAY ANY JUDGMENT WITH COSTS OBTAINED AGAINST OWNER, PARKHILL, OR ANY OFFICERS, AGENTS, OR EMPLOYEES, INCLUDING REASONABLE ATTORNEY FEES.

CONTRACTOR SHALL INDEMNIFY AND HOLD HARMLESS AND DEFEND OWNER AND ALL OWNER'S OFFICERS, AGENTS, AND EMPLOYEES AND PARKHILL AND OFFICERS, AGENTS, AND EMPLOYEES OF PARKHILL FROM ALL SUITS, ACTIONS, CLAIMS, DAMAGES, PERSONAL INJURIES, ACCIDENTAL DEATH, PROPERTY DAMAGE, LOSSES, AND EXPENSES OF ANY CHARACTER WHATSOEVER, INCLUDING ATTORNEY FEES, BROUGHT FOR/ON ACCOUNT OF ANY INJURIES/DAMAGES RECEIVED OR SUSTAINED BY ANY PERSON(S)/PROPERTY, ON ACCOUNT OF ANY NEGLIGENT ACT OF OWNER, OWNER'S OFFICERS, AGENTS, AND EMPLOYEES, OR ON ACCOUNT OF ANY NEGLIGENT ACT OF PARKHILL, OR OFFICERS, AGENTS, AND EMPLOYEES OF PARKHILL WHETHER SUCH NEGLIGENT ACTS WERE SOLE PROXIMATE CAUSE OF

INJURY/DAMAGE OR A PROXIMATE CAUSE JOINTLY AND CONCURRENTLY WITH CONTRACTOR OR CONTRACTOR'S EMPLOYEES, AGENTS, OR SUBCONTRACTORS NEGLIGENCE, IN EXECUTION, SUPERVISION, AND OPERATIONS GROWING OUT OF/IN ANY WAY CONNECTED WITH PERFORMANCE OF THIS CONTRACT, AND CONTRACTOR IS REQUIRED TO PAY ANY JUDGMENT WITH COSTS WHICH MAY BE OBTAINED AGAINST OWNER OR ANY OFFICERS, AGENTS, OR EMPLOYEES, INCLUDING REASONABLE ATTORNEY FEES.

CONTRACTOR AGREES TO INDEMNIFY AND SAVE OWNER AND PARKHILL HARMLESS FROM ALL CLAIMS GROWING OUT OF ANY DEMANDS OF SUBCONTRACTORS, LABORERS, WORKMEN, MECHANICS, MATERIALMEN, AND FURNISHERS OF MACHINERY AND PARTS THEREOF, EQUIPMENT, POWER TOOLS, ALL SUPPLIES, INCLUDING COMMISSARY INCURRED IN FURTHERING PERFORMANCE OF THIS CONTRACT. WHEN OWNER SO DESIRES, CONTRACTOR SHALL FURNISH SATISFACTORY EVIDENCE ALL OBLIGATIONS OF NATURE HEREINABOVE DESIGNATED HAVE BEEN PAID, DISCHARGED, OR WAIVED.

CONTRACTOR HEREBY WAIVES ALL RIGHTS TO ANY ATTORNEY FEES AWARDED AS RESULT OF ANY ACTION BROUGHT UNDER THE TEXAS UNIFORM DECLARATORY JUDGMENTS ACT RELATING TO THIS CONTRACT.

SP-24 CONTRACTOR RESPONSIBILITY FOR WORK

Until acceptance by Parkhill of any part or all construction, as provided for in these Specifications, it shall be under charge and care of Contractor who shall take every necessary precaution against injury or damage to any part of Work by action of elements or from any other cause whatsoever, whether arising from execution/non-execution of Work. Contractor shall rebuild, repair, restore, and make good, at own expense, all injuries or damage to any portion of Work occasioned by any noted cause before completion and acceptance.

SP-25 CORRECTION OF FAULTY WORK AFTER FINAL PAYMENT

Making Final Payment by Owner to Contractor shall not relieve Contractor of responsibility for faulty materials or workmanship. Contractor shall promptly replace any such defects discovered within one year from date of written acceptance of Work.

Performance Bond shall remain in effect until one year after date of written acceptance of Work to insure compliance by Contractor with requirements of this Article.

SP-26 TEXAS STATE SALES TAX

Work under this Contract is for an entity which qualifies for exemption pursuant to provisions of Article 151.309 of the Texas Tax Code.

Contractor performing this Contract may purchase, rent, or lease all materials, supplies, and equipment incorporated into Project by issuing an exemption certificate to supplier in lieu of tax, said exemption certificate complying with State Comptroller rulings. However, equipment and parts for equipment purchased used on Project but not incorporated into Project do not qualify for said tax exemption.

Contractor shall issue a resale certificate in lieu of paying such sales tax for all materials incorporated into Project. Further, Contractor shall separate charges for materials incorporated into Project from charges for labor. Any such exemption certificate issued by Contractor in lieu of tax shall be subject to provisions of State Comptroller rulings.

SP-27 SEPARATE CONTRACTS

Owner reserves the right to let other contracts about/near Project. Contractor shall afford other contractors a reasonable opportunity for introduction and storage of materials, execution of Work, and coordinate Work with theirs. Contractor coordination with other contractors shall require Parkhill approval. See Article SP-3 for additional requirements concerning separate Contracts.

SP-28 TRENCH SAFETY

Contractor shall strictly comply with all requirements of Occupational Safety and Health Administration (OSHA) Manual, Chapter XVII, Subpart P - Excavation, Trenching and Shoring, for all trenching and excavation operations.

If depths of trenches are encountered over 5 feet, Contractor shall cut trench walls to angle of repose of soils encountered or submit alternate shoring details to Parkhill for approval.

SP-29 LOAD RESTRICTIONS

Contractor shall comply with all legal load restrictions in hauling materials on public roads beyond limits of Work. A special permit will not relieve Contractor of liability for damage which may result from moving material or equipment.

Equipment operations of such weight or so loaded to cause damage to structures or any other type of construction will not be permitted. Hauling materials over base course is not permitted. Hauling materials over base or surface course under construction shall be limited as directed. No loads will be permitted on a concrete pavement, base, or structure before curing period expiration. Contractor shall be responsible for all damage done by hauling equipment and shall correct such damage at own expense.

SP-30 NOTICE TO PROCEED

Notice to proceed shall state the date on which it is expected Contractor will begin construction and from which date Contract time will be charged. Contractor shall begin Work to be performed under Contract within 10 days of date set by Parkhill in written Notice to Proceed, but in any event, Contractor shall notify Parkhill at least 24 hours in advance of time actual construction operations will begin.

SP-31 PAYMENT FOR MATERIALS ON HAND

Partial payments may be made to extent of delivered cost of materials to incorporate in Work, if such materials meet requirements of Contract, Plans, and Specifications and are delivered to acceptable sites on Airport property or other sites in the vicinity acceptable to Owner. Such delivered costs of stored or stockpiled materials may be included in next partial payment after these conditions are met:

A. Material is stored/stockpiled in a manner acceptable to Parkhill at/on an approved site.
B. Contractor furnished Parkhill with acceptable evidence of quantity and quality of such stored/stockpiled materials.
C. Contractor furnished Parkhill with satisfactory evidence material and transportation costs have been paid. Contractor is to provide copies of invoices paid (listing the cost of each item) for materials on hand requested on partial payment request.

D. Contractor furnished Owner legal title (free of liens/encumbrances of any kind) to material so stored/stockpiled.
E. Contractor furnished Owner evidence material stored/stockpiled is insured against loss by damage to or disappearance of such materials any time before use in Work.

Transfer of title and Owner's payment for such stored/stockpiled materials shall in no way relieve Contractor of responsibility for furnishing and placing such materials in accordance with requirements of Contract, Plans, and Specifications.

In no case will amount of partial payments for materials on hand exceed Contract price for such materials or Contract price for Contract item in which material is intended for use.

No partial payment made for stored/stockpiled living or perishable plant materials.

Contractor bears all costs associated with partial payment of stored/stockpiled materials in accordance with provisions of this subsection. See also Articles SP-52 "Partial Payments" and GC-46 "Partial Payments."

SP-32 WEIGHING AND MEASURING EQUIPMENT

Except as modified herein, all scales and scale installations shall meet requirements of the National Institute of Standards and Technology Handbooks 44 and 112 (published by U.S. Department of Commerce and available from Superintendent of Documents, U.S. Government Printing Office, Washington, D.D. 20402-9325), except required accuracy shall be 0.4 percent of load weighed or one graduation on the scale dial. Contractor shall provide personnel, facilities, and equipment for checking scales to Parkhill satisfaction.

Check all scales before beginning operations, after each move, at times when, in Parkhill opinion, there is a question as to accuracy/adequacy, and at least once each six months. Contractor shall furnish a report of calibration from a scale mechanic licensed by the Texas Department of Agriculture using certified weights and approved by Parkhill, certifying scales meet requirements of this item. Plant operations shall cease during checking operation. When inaccuracy/inadequacy is discovered, do not resume scale use until corrective measures are complete and/or scales calibrated. When equipment is adjusted, modify to bring performance errors as close as practicable to zero value.

SP-33 PROGRESS SCHEDULE

Within 15 working days after Award of Contract (or at Preconstruction Meeting), Contractor shall submit a Project Progress Schedule. Progress Schedule shall be prepared in a form suitable to Parkhill and show proposed starting and completion dates for each phase of construction as well as each item of Work within each phase. Progress schedule shall include a "Percent Complete Curve" with monthly amount, cumulative amount, and cumulative percent. Progress Schedule, if suitable and indicates certain Project completion within the specified time, will be approved in writing by Parkhill. Revisions/changes in approved progress schedule may only be made with Parkhill approval.

SP-34 AVERAGE CLIMATIC RANGE

Time allowed for completion of entire Project shall include number of calendar days for anticipated delays due to normal weather conditions. No time extension for delays due to weather allowed until and unless such delays exceed claims for extension of time because of abnormal inclement weather. Such extension of time shall be granted only because such abnormal inclement weather prevented execution of major items of Work on normal working days. Weather conditions on a particular day may affect Work on days following the normal weather day. This subsequent delay shall not be considered abnormal, and no extension of time will be considered.

The following Weather Table reflects meteorological data from Midland-Odessa area and will be used to determine Contract time extensions due to abnormally inclement weather. For purposes of this Contract, "abnormally inclement weather" is interpreted as number of days more than normal number of days on which rainfall exceeds 0.01-inch, or snow/ice pellets exceed 1.0-inch. Extensions of time to complete Work will be based on calendar days and granted by monthly account. No "rain days" unused for previous months may be carried over or accountable for future periods of time.

WEATHER TABLE		
MONTH	**MEAN NO. OF RAIN DAYS[1]**	**MEAN NO. OF SNOW/ICE PELLETS DAYS[2]**
January	3	0
February	3	0
March	4	0
April	3	0
May	5	0
June	5	0
July	4	0
August	5	0
September	7	0
October	3	0
November	3	0
December	3	0
TOTAL	**48**	**0**

[1] Mean number of days' rainfall, 0.01 inch or more.
[2] Mean number of days' 1.0 inch or more.
* Less than 0.5 inch.

Table based on information reported from MAF, Midland, Texas.
Latitude 31 degrees, 56 minutes N Longitude, 102 degrees 12 minutes W, elevation (ground) 2,862 feet.
Means are based on records covering 10 years from 2012-2021.

SP-35 SUBSTANTIALLY COMPLETE

In various Specifications "Substantially Complete" is used. Definition shall be:

> "Substantially complete shall occur at time Work to be completed is complete as specified and Owner accepts/occupies facility/improvement. All equipment shall have been completely installed, tested, ready for Owner acceptance and use, and accepted by Owner before Work is defined as substantially complete."

SP-36 SUBMITTALS

Transmit each submittal with Contractor-standard transmittal letter including Contractor name, address, and phone number. Identify Project, Contractor, subcontractor, or supplier, pertinent Drawing sheet and detail number(s), and Specification Section number, as appropriate. Apply Contractor stamp, signed/initialed certifying review, verification of Products required, field dimensions, adjacent construction Work, and coordination of information, are in accordance with requirements of Work and Contract Documents. Schedule submittals to expedite Project and deliver to Parkhill via the Procore website (except for product samples mailed to Parkhill's physical address). Coordinate submission of related items. Identify variations from Contract Documents and product/system limitations detrimental to successful performance of completed Work. Parkhill Project Coordinator (PC) shall distribute reviewed submittals to concerned parties via the Procore website instructing parties to promptly report any inability to comply with provisions. Process/format as follows:

- Digitally upload all submittals using PDF file extension. Each submittal shall be a single PDF file including transmittal letter. Multiple files for the same submittal will not be accepted.
- Submittals in any other format, including ZIP files, will be rejected.
- Hard copies will not be accepted.
- To ensure each page is legible, PDF pages of Drawings shall be same size/scale as a hard copy. Where applicable, provide scale symbols to indicate scale. Illegible submittals will be rejected.
- Upload submittals to the Parkhill Procore website.

Submittal procedures described herein apply to Construction Progress Schedule, Products List, Shop Drawings, Product Data, Samples (actual samples to submit, not digital files), Design Data, Test Reports, Certificates, Manufacturer Instructions and Field Reports, and other types of submittals submitted to Parkhill. Submittals shall include but not necessarily limited to:

- Preliminary CPM Contractor's Construction Schedule.
- Detailed lighting plan for night Work (if applicable).
- Contractor's list of emergency names and phone number.
- Video and/or written report of existing facilities conditions documenting inspection results performed before start of Work.
- List of subcontractors and material suppliers with experience statement.
- Certified payroll reports and statement of compliance from Contractor and all subcontractors (submitted directly to Airport Accountant).
- Disadvantaged Business Enterprise (DBE) utilization reports (submitted with monthly pay applications).
- Three-week lookahead Project schedule (at weekly construction meetings).
- Contractor Quality Control Plan (submitted by preconstruction meeting).
- Other submittals noted in Appendix C of Construction Management Plan (CMP).
- Contractor affidavit regarding settlement of claims (closeout request).
- Original affidavit acknowledging all subcontractors, material suppliers, payrolls, bill for materials and equipment, and other indebtedness connected with Contract have been paid or otherwise satisfied (closeout request).
- Original with notary signature, full and final release and waiver on liens from Contractor, each subcontractor, and material suppler that documents that are been paid in full (closeout request).
- Warranty (due at Final Completion).
- Maintenance and operating instructions of new equipment.

SP-37 GEOTECHNICAL INFORMATION

Geotechnical Investigation for Midland International Air and Space Port, Midland, Texas, dated February 15, 2023, 41 pages, from Jose Melendez, P.E. with Rodriguez Engineering Laboratories.

SP-38 SOVEREIGN IMMUNITY

By executing this Contract, Owner is not waiving its right to sovereign immunity. Owner is retaining immunity from suit. Owner is not granting consent to be sued by legislative resolution or action.

THERE IS NO WAIVER OF SOVEREIGN IMMUNITY.

SP-39 GOVERNING LAW AND VENUE

This Contract shall be governed by laws of the State of Texas. All performance and payment made pursuant to this Contract shall be deemed to have occurred in Midland County, Texas. Exclusive venue for any claims, suits, or other action arising from or connected in any way to this Contract or performance of this Contract shall be in Midland County, Texas. Obligations and undertakings of each party to this Contract shall be deemed to have occurred in Midland County, Texas. This Contract shall be governed by, interpreted, enforced, and construed under the law of the State of Texas. Laws of the State of Texas shall govern, construe, and enforce all rights and duties of parties, including but not limited to tort claims and all Contractual claims or disputes, arising from or relating in any way that would direct application of laws of another jurisdiction.

SP-40 THIRD-PARTY BENEFICIARY

This Contract does not create a third-party beneficiary nor is there a third-party beneficiary to this Contract. No person/entity not a party to this Contract shall have any third-party beneficiary or other rights hereunder.

SP-41 RELEASES

NOTWITHSTANDING ANY OTHER PROVISIONS, Contractor hereby releases, acquits, RELINQUISHES, and forever discharges OWNER, Owner's employees and officers, and PARKHILL, and its employees and officers, from any and all demands, claims, DAMAGES, or causes of action of any kind whatsoever which Contractor has/might have including but not limited to BREACH OF CONTRACT, QUANTUM MERUIT, CLAIMS UNDER DUE PROCESS AND TAKINGS CLAUSES OF THE TEXAS AND UNITED STATES CONSTITUTIONS, TORT CLAIMS, OR OWNER NEGLIGENCE.

SP-42 INDEPENDENT CONTRACTOR

It is expressly understood and agreed Contractor shall perform all Work and services described herein as an independent Contractor and not an officer, agent, servant, or employee of Owner; Contractor shall have exclusive control of and exclusive right to control details of services and Work performed hereunder, and all persons performing the same; and solely responsible for acts and omissions of its officers, agents, employees, Contractors, and subcontractors; that the doctrine of respondent superior shall not apply as between Owner and Contractor, its officers, agents, employees, Contractors, and subcontractors; and that nothing herein shall be construed as creating a partnership or joint enterprise between Owner and Contractor. No person performing any Work and services described hereunder by Contractor shall be considered an officer, agent, servant, or employee of Owner. Further, it is specifically understood and agreed that nothing in this Contract is intended or shall be construed as creating a "Community of Pecuniary Interest" or "An Equal Right of Control" which would give rise to vicarious liability. Contractor shall be an independent Contractor under this Contract and shall assume all rights, obligations, and liabilities applicable to it as such independent Contractor. Owner does not have the power to direct the order Work is done. Owner shall not have the right to control means, methods, or details of Contractor's work. Contractor shall assume exclusive responsibility for Work. Contractor is entirely free to do Work in its own way.

SP-43 NOTICE OF ALLEGED BREACH, STATUTORY PREREQUISITES

As a condition precedent to filing suit for alleged damages incurred by an alleged breach of an express or implied provision of this Contract, Contractor or legal representative shall give City Manager, or other reasonable official of Owner, notice in writing (consisting of one original and seven copies of notice attached to Contract) of such damages, duly verified, within 150 days after same has been sustained. Discovery rule does not apply to giving this notice. Notice shall include when, where, and how damages occurred, apparent extent thereof, amount of damages sustained, amount for which Contractor will settle, physical and mailing addresses of Contractor at time and date claim was presented as well as physical and mailing addresses of Contractor for six months immediately preceding occurrence of such damages, and names and addresses of witnesses upon whom Contractor relies on to establish claim. Failure to notify City Manager within time and manner provided herein shall exonerate, excuse, and except Owner from any liability whatsoever. Owner is under no obligation to provide notice to Contractor that Contractor's notice is insufficient. Owner reserves the right to request reasonable, additional information regarding claim. Said additional information shall be supplied within 30 days after receipt of notice.

Statutory prerequisites outlined herein constitute jurisdictional requirements pursuant to Section 271.154 of the Texas Local Government Code and Section 311.034 of the Texas Government Code. Notwithstanding another provision, Contractor failure to comply with requirements herein shall perpetually bar Contractor's claim for damages under Chapter 271 of the Texas Local Government Code, and Section 311.034 of the Texas Government Code, regardless of if Owner has actual/constructive notice/knowledge of said claim or alleged damages. Contractor agrees requirements of this entire Contract are reasonable.

SP-44 ASSIGNMENT

Contractor shall not directly/indirectly assign all/any part of this Contract or any interest, right, or privilege herein, without prior written consent of Owner. Owner has the sole discretion on whether to grant consent to an assignment.

SP-45 WAIVER OF ATTORNEY FEES

BY EXECUTING THIS CONTRACT, CONTRACTOR AGREES TO WAIVE AND DOES HEREBY KNOWINGLY, CONCLUSIVELY, VOLUNTARILY, AND INTENTIONALLY WAIVE ANY CLAIM IT HAS OR MAY HAVE IN THE FUTURE AGAINST OWNER, REGARDING AWARD OF ATTORNEY FEES, WHICH ARE IN ANY WAY RELATED TO CONTRACT OR CONSTRUCTION, INTERPRETATION, OR BREACH OF CONTRACT. CONTRACTOR SPECIFICALLY AGREES IF CONTRACTOR BRINGS/COMMENCES ANY LEGAL ACTION/PROCEEDING RELATED TO THIS CONTRACT, CONSTRUCTION, INTERPRETATION, VALIDITY, OR BREACH OF CONTRACT INCLUDING BUT NOT LIMITED TO ANY ACTION PURSUANT TO PROVISIONS OF THE TEXAS UNIFORM DECLARATORY JUDGMENTS ACT (TEXAS CIVIL PRACTICE AND REMEDIES CODE SECTION 37.001, ET. SEQ., AS AMENDED), OR CHAPTER 271 OF THE TEXAS LOCAL GOVERNMENT CODE, CONTRACTOR AGREES TO ABANDON, WAIVE, AND RELINQUISH ALL RIGHTS TO RECOVERY OF ATTORNEY FEES TO WHICH CONTRACTOR MIGHT OTHERWISE BE ENTITLED.

CONTRACTOR AGREES THIS IS A VOLUNTARY AND INTENTIONAL RELINQUISHMENT AND ABANDONMENT OF A PRESENTLY EXISTING KNOWN RIGHT. CONTRACTOR ACKNOWLEDGES AN UNDERSTANDING OF ALL TERMS AND CONDITIONS OF CONTRACT. CONTRACTOR FURTHER ACKNOWLEDGES AND AGREES THERE WAS AND IS NO DISPARITY OF BARGAINING POWER BETWEEN OWNER AND CONTRACTOR. THIS SECTION SHALL NOT BE CONSTRUED/INTERPRETED AS A WAIVER OF SOVEREIGN IMMUNITY.

CONTRACTOR AND OWNER ARE RELYING ON THEIR OWN JUDGMENT. EACH PARTY HAD THE OPPORTUNITY TO DISCUSS THIS CONTRACT WITH COMPETENT LEGAL COUNSEL PRIOR TO EXECUTION.

SP-46 PROMPT PAY ACT

Owner and Contractor agree Texas Government Code, Chapter 2251, Payment for Goods and Services (the "Prompt Pay Act") does not waive governmental immunity.

SP-47 PAYMENT

After Contractor completes all Work including all Change Orders altering original Scope, amount of said Contract are completed, and Owner inspected and approved that Work is completed and in compliance with Contract and all subsequent Change Orders, Owner may thereafter issue payment to Contractor in amount of Contract and all Change Orders. Owner shall be the final judge of when Contractor completes Work. Owner, at sole discretion, shall determine if Work under Contract and under any Change Orders was done to Owner requirements. Owner may make periodic payments to Contractor; however, such periodic payments may only be made pursuant to this Article and only after all Work and Change Orders are completed by Contractor and approved by Owner.

SP-48 PROJECT CLOSEOUT

Approval of Final Payment to Contractor is contingent upon completion and submittal of items listed below. Final payment not approved until Parkhill approves Contractor's final submittal. Contractor shall:

- provide two copies of all manufacturer warranties specified for materials, equipment, and installations.
- provide weekly payroll records (not previously received) from General Contractor and all subcontractors.
- complete final cleanup. Upon completion of Work and before Acceptance and Final Payment is made, Contractor shall remove from Site all machinery, equipment, surplus and discarded materials, rubbish, temporary structures, and stumps or portions of trees. Contractor shall cut all brush and woods within limits indicated and leave site neat and presentable. Material cleared from site and deposited on adjacent property will not be considered as having been disposed satisfactorily unless Contractor obtained written permission of such property owner.
- complete all punch list items identified during Final Inspection.
- provide complete release of all claims for labor and material arising out of Contract.
- provide a certified statement signed by subcontractors indicating actual amounts paid to Disadvantaged Business Enterprise (DBE) subcontractors and/or suppliers associated with Project.
- return copies of sales tax completion forms when applicable per state requirements.
- provide manufacturer certifications for all items incorporated in Work.
- make all required Record, As-Built, or As-Constructed Drawings available.
- deliver Project Operation and Maintenance (O&M) Manual(s).
- provide Security for Construction Warranty.
- submit equipment commissioning documentation, if required.

SP-49 DISCLOSURE OF INTERESTED PARTIES

Successful Proposer will be required to complete Texas Ethics Commission Form 1295 - Certificate of Interested Parties and submit completed form with executed Contracts for Project. Complete Form 1295 online at the Texas Ethics website: https://www.ethics.state.tx.us/filinginfo/1295/.

Parkhill will email links to Contractor with an explanation once Contract is awarded. Contractor is responsible for completing form, printing, and submitting along with all other required Contract documents.

SP-50 PARKHILL/RPR AUTHORITY AND DUTY

Parkhill nor RPR shall supervise, direct, or have control over Contractor's Work nor have any responsibility for construction means, methods, techniques, sequences, or procedures selected by Contractor nor for Contractor's safety precautions or programs in connection with Work. These rights and responsibilities are solely those of Contractor in accordance with Contract Documents.

Parkhill nor RPR shall be responsible for any acts/omissions of Contractor, subcontractor, entity performing any portions of Work, or agents or employees of any of them. Parkhill nor RPR guarantee Contractor performance nor are responsible for Contractor's failure to perform Work in accordance with Contract Documents or any applicable laws, codes, rules, or regulations.

SP-51 ANTI-BOYCOTT STATUTES

To the extent that Sections 2271.002 and 2274.002 of the Texas Government Code (collectively, the "Anti-Boycott Statutes") apply to this Contract, Contractor hereby verifies:

- that Contractor does not boycott Israel and will not boycott Israel during the term of this Contract;
- that Contractor does not boycott energy companies and will not boycott energy companies during the term of this Contract; and
- that Contractor does not have a practice, policy, guidance, or directive that discriminates against a firearm entity or firearm trade association and will not discriminate during the term of this Contract against a firearm entity or firearm trade association.

To the extent that the Anti-Boycott Statutes do not apply to this Contract, such verification is not required, and Contractor shall be deemed to have not made such verification.

SP-52 PARTIAL PAYMENTS

Partial Payments will be made to Contractor at least once each month as work progresses. Said payments will be based upon estimates, prepared by Contractor for Architect/Engineer review, of the value of work performed and materials complete and in place, in accordance with Contract, Plans, and Specifications. Such partial payments may also include delivered actual cost of those materials stockpiled and stored in accordance with Construction Contract requirements. No partial payment will be made when amount due to Contractor since last estimate is less than $500.

1) From the total amount determined payable on a partial payment, Owner shall deduct and retain 5% of such total amount to protect Owner interests. Unless Owner instructs otherwise, amount Owner retains will be in effect until final payment is made except:
    a. Contractor may request release of retainage on work partially accepted by Owner in accordance with Construction Contract requirements. Contractor must provide a certified invoice to Owner to support retainage value held by Owner for partially accepted work.
2) Contractor is required to pay all subcontractors for satisfactory performance of their contracts no later than 30 days after Contractor received partial payment. Contractor must provide Owner evidence of prompt and full retainage payment held by prime Contractor to subcontractor within 30 days after subcontractor work is satisfactorily

completed. Subcontractor work is satisfactorily completed when all tasks called for in subcontract are accomplished and documented as Owner requires. When Owner incrementally accepts a portion of a prime contract, subcontractor work covered by that acceptance is deemed satisfactorily completed.

3) When at least 95% of work is completed to Owner satisfaction, Contractor shall, at Owner discretion and with consent of surety, prepare estimates of both contract value and cost of remaining work to be done. Owner may retain an amount not less than twice the contract value or estimated cost, whichever is greater, of work remaining to be done. Remainder, less all previous payments and deductions, will then be certified for payment to Contractor.

It is understood and agreed that Contractor shall not be entitled to demand or receive partial payment based on quantities of work in excess of those provided in proposal or covered by approved change orders or supplemental agreements, except when Architect/Engineer determines such excess quantities are to be part of the final quantity for item of work in question.

No partial payment shall bind Owner to acceptance of any materials or work in place as to quality or quantity. All partial payments are subject to correction at time of final payment in accordance with Construction Contract requirements.

Contractor shall deliver Owner a complete release of all claims for labor and material arising out of this contract before final payment is made. If any subcontractor or supplier fails to furnish such a release in full, Contractor may furnish a bond or other collateral satisfactory to Owner to indemnify Owner against any potential lien or other such claim. Bond or collateral shall include all costs, expenses, and attorney fees Owner may be compelled to pay in discharging any such lien or claim.

END OF DOCUMENT

GENERAL CONDITIONS OF CONTRACT

GC-01. OWNER

When "Owner," "Party of the First Part," or "First Party" are used in Contract Documents, it shall refer to Owner as described in Contract.

GC-02. CONTRACTOR

When "Contractor," "Party of the Second Part," or "Second Party," are used, it shall mean person(s), co-partnership, or corporation so defined in Contract who agreed to perform Work embraced in this Contract, or to legal representatives.

GC-03. ARCHITECT/ENGINEER

When "Architect/Engineer" is used in this Contract, it shall refer to Parkhill, Architect/Engineer of Owner, or such other Architect/Engineer, supervisor, or inspector, as authorized by said Owner, to act as Owner's representative with respect to services performed or furnished by Architect/Engineer.

GC-04. CONTRACT DOCUMENTS

Contract Documents shall consist of Notice to Bidders (Advertisement), Instructions to Bidders, Proposal, signed Contract, Performance Bond, Payment Bond, General Conditions of the Contract, Special Provisions, Technical Specifications, Plans, and all modifications thereof incorporated in any documents before execution of Contract.

Contract Documents are complementary and called for by any one person/entity shall be as binding as if called for by all. In case of conflict between Contract Documents, priority of interpretation shall be in the following order:

1. Signed Contract,
2. Performance Bond,
3. Special Bonds (if any),
4. Proposal,
5. Special Provisions,
6. Notice to Bidders,
7. Instructions to Bidders,
8. Technical Specifications,
9. Plans, and
10. General Conditions of the Contract.

GC-05. SUBCONTRACTOR

"Subcontractor," as employed herein, includes only those with a direct contract with Contractor and includes one who furnished material worked to a special design according to plans or Specifications of this Work but does not include one who merely furnished material not so worked.

GC-06. WRITTEN NOTICE

Written notice shall be deemed to be duly served if delivered in person to individual, member of firm, or officer of corporation intended, or if delivered/sent by registered mail to last business address known.

GC-07. WORK

Unless otherwise stipulated, Contractor shall provide and pay for all materials, supplies, machinery, equipment, tools, superintendence, labor, insurance, water, light, power, fuel, transportation, and other facilities necessary for execution and completion of Work covered by Contract Documents. Unless otherwise specified, all materials shall be new and both workmanship and materials of good quality. Contractor shall, if required, furnish satisfactory evidence as to kind and quality of materials. Materials or Work described in words shall have a well-known technical or trade meaning and held to refer to such recognized standards.

GC-08. DELETED

GC-09. DELETED

GC-10. LAYOUT OF WORK

Except as specifically provided herein, Contractor shall be responsible for laying out all Work and accomplish Work as acceptable to Architect/Engineer. Architect/Engineer will check Contractor's layout of all major structures and other layout work done by Contractor at Contractor request, but this check does not relieve Contractor of responsibility of correctly locating all Work in accordance with Plans and Specifications.

GC-11. ARCHITECT/ENGINEER AUTHORITY AND DUTY

Unless otherwise specified, it is mutually agreed between parties to this Contract that Architect/Engineer will observe quality and progress of Work at various times. To prevent delays, disputes, and discourage litigation, it is further agreed Architect/Engineer shall, in all cases, determine amounts and quantities of several kinds of Work paid under this Contract. He shall determine all questions in relation to said Work and construction thereof, and in all cases, decide every question which may arise relative to execution of this Contract on part of said Contractor. Architect/Engineer estimates and findings shall be conditions precedent to right of parties hereto to any action of Contract, and any rights of Contractor to receive any money under this Contract; provided, however, should Architect/Engineer render any decision or give any direction, which in the opinion of either party hereto, is not in accordance with meaning and intent of this Contract, either party may file with said Architect/Engineer within 30 days, written objection to decision/direction so rendered. Contract intent is for there to be no delay in execution of Work; therefore, written decisions/directions of Architect/Engineer as rendered shall be promptly carried out and any claim arising therefrom shall be thereafter adjusted as hereinafter provided.

Architect/Engineer shall, within a reasonable time, render and deliver to both Owner and Contractor, a written decision on all claims of parties hereto and all questions which may arise relative to execution of Work or interpretation of Contract, Specifications, and Plans. Should Architect/Engineer fail to make such decision within a reasonable time, an appeal may be taken as if decision was rendered against party appealing.

When "directed," "required," "permitted," "designated," "considered necessary," "prescribed," "approval," "acceptable," "satisfactory," or words of like import are used, it is understood direction, requirement, permission, order, designation, prescription, approved by, acceptable, or satisfactory of Architect/Engineer is intended.

In Specifications or Drawings accompanying this Contract, terms of description of various qualities relative to finish, workmanship, or other qualities of similar kind which cannot, from their nature, be specifically and clearly described and specified, but necessarily described in general terms, fulfillment of which must depend on individual judgment, in all such cases, any question of fulfillment of said Specifications shall be decided by Architect/Engineer, and said work done in accordance with interpretations of meaning of words, terms, or clauses defining character of Work.

GC-12. SUPERINTENDENCE AND PROJECT REPRESENTATION

It is agreed by Contractor that Architect/Engineer may appoint such subordinate engineers, supervisors, or project representatives as Architect/Engineer may deem proper to inspect material furnished and Work done under this Contract, see said material is furnished and done in accordance with Specifications therefor. Contractor shall furnish all reasonable aid and assistance required by subordinate engineers, supervisors, or project representatives for proper inspection and examination of Work. Contractor shall regard and obey directions and instructions of any subordinate engineers, supervisors, or project representatives so appointed when such directions and instructions are consistent with obligations of this Contract and accompanying Plans and Specifications, provided; however, should Contractor object to any orders by any subordinate engineer, supervisor, or project representative, Contractor may, within six days, make written appeal to Architect/Engineer for his decision.

GC-13. CONTRACTOR DUTY AND SUPERINTENDENCE

Contractor shall give personal attention to faithful prosecution and completion of this Contract and keep on Work, during progress, competent superintendent, and any necessary assistants all satisfactory to Architect/Engineer. Superintendent shall represent Contractor when absent and all directions given shall be as binding as if given to Contractor. Adequate supervision by competent and responsible Contractor representatives is essential to proper performance of Work and lack of such supervision shall be grounds for suspending Contractor operations. Confirm important directions in writing to Contractor. Confirm other directions on written request in each case.

GC-14. CONTRACTOR UNDERSTANDING

It is understood and agreed that Contractor is, by careful examination, satisfied as to nature and location of Work, confirmation of ground, character, quality, and quantity of materials to be encountered, character of equipment and facilities needed preliminary to and during prosecution of Work, general and local conditions, and all other matters which can in any way affect Work under this Contract. No verbal agreement or conversation with any officer, agent, or employee of Owner, either before or after execution of this Contract, shall affect or modify any terms or obligations herein contained.

GC-15. CHARACTER OF WORKERS

Contractor agrees to employ orderly and competent employees, skillful in performance of work required under this Contract, to do Work; and agrees whenever informed by Architect/Engineer in writing, any employee(s) on Work are, in Architect/Engineer opinion, incompetent, unfaithful, or disorderly, such employee(s) shall be discharged from Work and not again employed on Work without Architect/Engineer's written consent.

GC-16. CONTRACTOR BUILDINGS

Building structures for housing employees, erecting tents, or other forms of protection will be permitted only at such places as Architect/Engineer shall direct, and sanitary conditions of grounds in or about such structures shall always be maintained as satisfactory to Architect/Engineer.

GC-17. SANITATION

Contractor shall construct and maintain necessary sanitary conveniences for use of laborers on work, properly secluded from public observation, approved by Architect/Engineer, and use strictly enforced.

GC-18. SHOP DRAWINGS

Contractor shall submit to Architect/Engineer with such promptness as to cause no delay in work of any Contractor, Shop/Setting Drawings and schedules required for Work of various trades, and Architect/Engineer shall pass upon them with reasonable promptness, making required corrections. Architect/Engineer approval of such Drawings or schedules, shall not relieve Contractor from responsibility for deviations from Drawings or Specifications, unless Architect/Engineer called attention to, in writing,

such deviations at time of submission nor relieve Contractor from responsibility for errors of any sort in Shop Drawings or schedules.

GC-19. PRELIMINARY APPROVAL

Architect/Engineer shall not have power to waive obligations of this Contract for furnishing by Contractor of good material, and performing good work as herein described, and full accordance with Plans and Specifications. No failure or omission of Architect/Engineer to condemn any defective work or material shall relieve Contractor from obligations to tear out, remove, and properly replace same at any time prior to final acceptance upon discovery of said defective work or material, provided; however, Architect/Engineer shall, upon request of Contractor, inspect, accept, and/or reject any material furnished, and in event material was once accepted by Architect/Engineer, such acceptance shall be binding on Owner, unless clearly shown such material furnished does not meet specifications for this work. Any questioned work may be ordered taken up or removed for Architect/Engineer to re-examine, prior to final acceptance, and, if found not in accordance with Specifications for said work, all expense of removing, re-examination, and replacement shall be borne by Contractor, otherwise expense thus incurred shall be allowed as Extra Work and paid for by Owner, provided, where inspection or approval is specifically required by Specifications prior to performance of certain work, should Contractor proceed with such work without requesting prior inspection or approval, Contractor shall bear all expense of taking up, removing, and replacing work if so directed by Architect/Engineer.

GC-20. DEFECTS AND REMEDIES

It is further agreed if Work or any part thereof, or any material brought on site of Work for use in Work or selected for same, shall be deemed by Architect/Engineer as unsuitable or not in conformity with Specifications, Contractor shall, after receipt of written notice thereof from Architect/Engineer, forthwith remove such material and rebuild or otherwise remedy such work for full accordance with this Contract.

GC-21. CHANGES AND ALTERATIONS

Contractor further agrees Owner may make such changes and alterations as Owner sees fit, in line, grade, form, dimensions, plans, or materials for Work herein contemplated, or any part thereof, before or after beginning construction without affecting validity of this Contract and accompanying performance bond.

If such changes or alterations diminish quantity of Work to do, they shall not constitute basis for a claim for damages, or anticipated profits on Work that may be dispensed with, except as provided for unit price items under "Estimated Quantities." If amount of Work is increased or decreased, and Work can fairly be classified under Specifications, price adjustment for such increase or decrease shall be made according to quantity actually done and at unit price, if any, established for such work under this Contract, except as provided for unit price items under "Estimated Quantities;" otherwise, price adjustment for such changed work shall be made as provided under Extra Work. In case Owner shall make such changes or alterations as useless any material already done or material already furnished or used, Owner shall recompense Contractor for any material or labor so used, and any actual loss occasioned by such change, due to actual expense incurred in preparation as originally planned.

GC-22. RIGHT OF ARCHITECT/ENGINEER TO MODIFY METHODS AND EQUIPMENT

If at any time, methods or equipment used by Contractor are found inadequate to secure quality of Work or rate of progress required under this Contract, Architect/Engineer may order Contractor, in writing, to increase safety or improve character and efficiency, and Contractor shall comply with such order.

If at any time, Working force of Contractor is inadequate for securing progress herein specified, Contractor shall, if so ordered in writing, increase his force or equipment, or both, to such an extent as to give reasonable assurance of compliance with schedule of progress.

GC-23. KEEPING PLANS AND SPECIFICATIONS ACCESSIBLE

Architect/Engineer shall furnish Contractor with an adequate and reasonable number of copies of all Specifications without additional expense, and Contractor shall keep one copy of same constantly accessible on Work, with latest revisions noted thereon.

GC-24. OWNERSHIP OF DRAWINGS

All Drawings, Specifications, and copies thereof furnished by Architect/Engineer shall not be reused on other work, and with exception of signed contract sets, are returned to him on request, at completion of Work. All models are property of Owner.

GC-25. ADEQUACY OF DESIGN

It is understood Owner employed competent engineers and designers. It is, therefore, agreed Owner shall be responsible for adequacy of design, sufficiency of Contract Documents, safety of structure, and practicability of operations of completed Project, provided Contractor complied with requirements of said Contract Documents, all approved modifications thereof, additions, and alterations thereto approved in writing by Owner. Burden of proof of such compliance shall be upon Contractor to show compliance with said requirements of Contract Documents, approved modifications thereof, and all approved additions and alterations thereto.

GC-26. RIGHT OF ENTRY

Owner reserves the right to enter property or location on which Work herein contracted for are to be constructed or installed, by such agent(s) as elected, to supervise and inspect Work, or construct or install such collateral work as said Owner may desire.

GC-27. COLLATERAL CONTRACTS

Owner agrees to provide by separate contract or otherwise, all labor and material essential to completion of Work specifically excluded from this Contract, not delaying progress of Work, or damage said Contractor, except where such delays are specifically mentioned elsewhere in Contract Documents.

GC-28. DISCREPANCIES AND OMISSIONS

It is further agreed the intent of this Contract is all work must be done and material furnished in accordance with generally accepted practice, and in the event of any discrepancies between separate Contract Documents, priority of interpretation defined under "Contract Documents" shall govern. In the event of a remaining doubt as to meaning and intent of any portion of Contract, Specifications, or Drawings, Architect/Engineer shall define which is intended to apply to Work.

GC-29. DELETED

GC-30. PROTECTION AGAINST ACCIDENT TO EMPLOYEES AND THE PUBLIC

Contractor shall take out and procure a policy of worker compensation with an insurance company licensed to transact business in the State of Texas, which policy shall comply with Workman's Compensation Law of the State of Texas. Contractor shall always exercise reasonable precautions for the safety of employees and others on/near Work and comply with all applicable provisions of Federal, State, and Municipal safety laws and building and construction codes. All machinery, equipment, and other physical hazards shall be guarded in accordance with the "Manual of Accident Prevention in Construction" of the Associated General Contractors of America except where incompatible with Federal, State, or Municipal laws or regulations. Contractor, sureties, and insurance carriers shall defend, indemnify, and save harmless Owner and all officers, agents, employees, Architect/Engineer, agents, and employees from all suits, actions, or claims of any character, name, and description brought for or on account of any injuries or damages received or sustained by any persons/property, on account of any negligent act or fault of Contractor or any subcontractor, agents, or employees, in execution and supervision of said Contract and Project of this Contract or on account of Contractor or any subcontractor failure to provide necessary

barricades, warning lights, or signs, and will be required to pay any judgment with costs obtained against Owner or any officers, agents, or employees, and/or Architect/Engineer, agents, and/or employees.

Safety precautions taken shall be sole responsibility and discretion of Contractor, as an independent contractor; inclusion of this paragraph in Contract, as well as any notice given by Owner, Architect/Engineer, or representatives concerning omissions under this article as Work progresses, are intended only as reminders to Contractor of duty and not construed as any assumption of duty to supervise safety precautions by Owner or Architect/Engineer.

GC-31. CONTRACTOR INSURANCE

Contractor shall procure and carry, at sole cost and expense, throughout life of Contract, insurance protection as hereinafter specified. All Insurance shall name Owner and Architect/Engineer as additional insureds except Worker's Compensation and Employer Liability Insurance. Such insurance shall be carried with an insurance company licensed to transact business in the State of Texas and cover all operations in connection with this Contract. Contractor insurance shall cover self and, at minimum, all subcontractors and sub-subcontractors. All other sublevels of contractors shall provide copies of proof of insurance if not covered by General Contractor.

Contractor shall provide a Waiver of Subrogation in favor of City of Midland and Parkhill on Worker's Compensation, Employer Liability Insurance, Contractor's Public Liability, Property Damage Liability Insurance, and Automobile Insurance.

a. Worker's Compensation and Employer Liability Insurance: As required by statute, covering all employees employed on Work whether employed by Contractor or subcontractor.
b. Contractor's Public Liability and Property Damage Liability Insurance: Providing for a limit not less than $1,000,000.00 for all damages arising out of bodily injuries to or death of one person, and subject to that limit for each person, a total limit of $1,000,000.00 for all damages arising out of bodily injuries to or death of two or more persons in any one accident, and regular Contractor's Property Damage Liability Insurance providing for a limit of not less than $1,000,000.00 for all damages arising out of injury to or destruction of property in any one accident, and subject to that limit per accident, a total (or aggregate) limit of $2,000,000.00 for all damages arising out of injury to or destruction of property during policy period.
c. Automobile Insurance: Providing a limit not less than $1,000,000.00 for injuries, including accidental death, to any one person and, subject to same limit for each person a total limit of $2,000,000.00 on account of one accident, and automobile property damage insurance in an amount not less than $500,000.00.
d. Proof of Insurance Carriage: Before work on any contract or subcontract, each Contractor and subcontractor shall submit to Owner for approval, six certificates covering each insurance policy carried and offered as evidence of compliance with requirements, signed by an authorized representative of the insurance company, setting forth:
    1. Name and address of insured;
    2. Location of operations to which insurance applies;
    3. Number of policy and type(s) of insurance in force thereunder on date borne by such certificate;
    4. Expiration date of policy and limit(s) of liability thereunder on date borne by such certificate;
    5. Statement that insurance of type afforded by policy, applied to all operations of whatever character, undertaken by insured during performance of this Contract, provided such operations are required in performance of Contract; and

6. Provision that policy may be cancelled only by mailing written notice to named insured at address shown in this policy stating when, not less than 10 days thereafter, cancellation of such policy shall be effective, with copy to Owner of letter of intent.

GC-32. TIME FOR COMPLETION AND LIQUIDATED DAMAGES

It is hereby understood and mutually agreed by and between Contractor and Owner, date of beginning and time for completion as specified in Contract of Work to be done hereunder, are ESSENTIAL CONDITIONS of this Contract; and further mutually understood and agreed Work embraced in this Contract shall be commenced on a date to be specified in "Notice to Proceed."

Contractor agrees said Work shall be prosecuted regularly, diligently, and uninterruptedly at such rate of progress as will ensure full completion thereof within time specified. It is expressly understood and agreed, by and between Contractor and Owner, time for completion of Work described herein is a reasonable time for completion of same, taking into consideration average climatic range and usual industrial conditions prevailing in this locality.

If said Contractor shall neglect, fail, or refuse to complete Work within time herein specified, or any proper extension thereof granted by Owner, Contractor does hereby agree, as a part consideration for awarding this Contract, to pay to Owner amount specified in Contract, not as a penalty but as liquidated damages for such breach of contract as hereinafter set forth, for each calendar day Contractor shall be in default after time stipulated in Contract for completing Work.

Said amount is fixed and agreed upon by and between Contractor and Owner because of impracticability and extreme difficulty of fixing and ascertaining actual damages Owner would in such event sustain, and said amount is agreed to be amount of damages Owner would sustain and said amount retained as necessary by Owner from current periodical estimates.

It is further agreed time is of the essence of every portion of this Contract and Specifications wherein a definite and certain length of time is fixed for performance of any act whatsoever; and where under Contract an additional time is allowed for completion of any work, new time limit fixed by such extension shall be of the essence of this Contract. Provided, Contractor shall not be charged with liquidated damages or any excess cost when Owner determines Contractor is without fault and Contractor's reasons for time extension are acceptable to Owner; Provided, further, Contractor shall not be charged with liquidated damages of any excess cost when delay in completion of Work is due:

a. To any preference, priority, or allocation order duly issued by the Government;
b. To unforeseeable cause beyond Contractor control and without fault or negligence including but not restricted to acts of God or public enemy, acts of Owner, acts of another Contractor in performance of contract with Owner, fires, floods, epidemics, quarantine restrictions, strikes, freight embargoes, and severe weather; and
c. To any delays of subcontractors/suppliers occasioned by any cause specified in (a) and (b) of this article:

Provided further, Contractor shall, within 10 days from beginning of such delay, unless Owner shall grant a further time prior to date of final settlement of Contract, notify Owner in writing of causes of delay, who shall ascertain facts and extent of delay and notify Contractor within a reasonable time of decision in the matter.

GC-33. PRICE FOR WORK

In consideration of furnishing all necessary labor, equipment, and material and completion of all Work by Contractor, and on delivery of all material embraced in this Contract in full conformity with Specifications and stipulations herein contained, Owner agrees to pay Contractor prices set forth in Proposal hereto attached, made a part of this Contract, and Contractor hereby agrees to receive such prices in full for furnishing all material and labor required for aforesaid Work, also for all expenses incurred, and well and truly performing same and whole thereof in the manner and according to this Contract, Specifications, Drawings, and requirements of Architect/Engineer.

GC-34. BONDS

It is further agreed by parties to this Contract that Contractor will execute bonds in sum of 100 percent of total contract price for satisfactory performance of Work and payment of all labor, materials, and equipment in accordance with this Contract on forms provided for this purpose, executed by an approved surety company authorized to do business in the State of Texas, and agreed this Contract shall not be in effect until such bonds are furnished and approved by Owner. Performance and Payment Bonds shall comply with Chapter 2253 of the Texas Government Code.

GC-35. LOSSES FROM NATURAL CAUSES

Unless otherwise specified, all loss or damage to Contractor arising out of the nature of Work to be done, action of elements, any unforeseen circumstances in prosecution of same, or unusual obstructions/difficulties encountered in prosecution of Work, shall be sustained and borne by Contractor at own expense.

GC-36. PROTECTION OF ADJOINING PROPERTY

Said Contractor shall take proper means to protect adjacent/adjoining property/properties, in any way encountered, which might be injured/seriously affected by any process of construction undertaken under this Contract, from any damage/injury by reason of said process of construction; and shall be liable for any/all claims for such damage on account of failure to fully protect all adjoining property. Contractor agrees to indemnify, save, and hold harmless Owner against any claim(s) for damages due to any injury to any adjacent or adjoining property, arising/growing out of performance of Contract, but any such indemnity shall not apply to any claim of any kind arising out of existence or character of Work.

GC-37. PROTECTION AGAINST SUBCONTRACTOR, LABORER, MATERIALMEN AND FURNISHER OF MACHINERY, EQUIPMENT, AND SUPPLY CLAIMS

Contractor agrees to indemnify and save Owner harmless from all claims growing out of lawful demands of subcontractors, laborers, workmen, mechanics, materialmen, and furnishers of machinery and parts thereof, equipment, power tools, and all supplies, including commissary, incurred in furthering the performance of this Contract. When so desired by Owner, Contractor shall furnish satisfactory evidence that all obligations of nature herein designated, have been paid, discharged, or waived. If Contractor fails, Owner may, at Contractor option, pay directly any unpaid bills, of which Owner has written notice, or withhold from Contractor's unpaid compensation a sum of money deemed reasonably sufficient to liquidate any/all such lawful claims until satisfactory evidence is furnished that all liabilities were fully discharged, whereupon payments to Contractor shall be resumed in full, in accordance with terms of this Contract, but in no event shall provisions of this article be construed to impose any obligations upon Owner by either Contractor or surety.

GC-38. PROTECTION AGAINST ROYALTIES OR PATENTED INVENTION

Contractor shall pay all royalties and license fees and provide use of any design, device, material, or process covered by letters patent or copyright by suitable legal contract with patentee/owner. Contractor shall defend all suits/claims for infringement of any patent/copyrights and indemnify and save Owner harmless from any loss on account thereof, except Owner shall defend all such suits and claims and be responsible for all such loss when a particular design, device, material, or process/product of a particular

manufacturer is specified/required by Owner provided; however, if choice of alternate design, device, material, or process is allowed, Contractor shall indemnify and save Owner harmless from any loss on account of thereof. If material/process specified/required by Owner is an infringement, Contractor shall be responsible for such loss unless promptly giving such information to Owner.

GC-39. LAWS AND ORDINANCES

Contractor shall always observe and comply with all Federal, State, and local laws, ordinances, and regulations, which affect Contractor Work, and indemnify and save harmless Owner against any claims arising from violation of any such laws, ordinances, and regulations by Contractor or employees, except where such violations are called for by provisions of Contract Documents. If Plans and Specifications are at variance therewith, Contractor shall promptly notify Architect/Engineer in writing, and any necessary changes be adjusted as provided in Contract for changes in Work. If Contractor performs any work knowing it to be contrary to such laws, ordinances, rules, regulations, and without such notice to Architect/Engineer, Contractor shall bear all costs arising therefrom. In case Owner is a body politic and corporate law deriving powers, insofar as same regulates objects for which, in manner in which, or conditions under which Owner may enter into contract, shall be controlling, and considered as part of this Contract, to same effect as though embodied herein.

GC-40. ASSIGNMENT AND SUBLETTING

Contractor further agrees to retain personal control and give personal attention to fulfillment of Contract and not assign by Power of Attorney, or otherwise, or sublet said Contract without written consent of Owner, and no part or feature of Work will be sublet to anyone objectionable to Architect/Engineer or Owner. Contractor further agrees subletting of any portion/feature of Work or materials required in performance of this Contract, shall not relieve Contractor from full obligations to Owner, as provided by this Contract.

GC-41. TIME AND ORDER OF COMPLETION

It is the meaning and intent of this Contract, unless otherwise herein specifically provided, Contractor be allowed to prosecute Work at such times and sessions, in such order of precedence and manner most conducive to economy of construction provided; however, order and time of prosecution shall be such that Work shall be substantially completed as a whole or in part, in accordance with this Contract, Plans, and Specifications, and within time of completion designated in proposal; provided also, when Owner is having other work done, by Contract or his own force, Architect/Engineer may direct time and manner of constructing Work done under this Contract so conflict will be avoided and construction of various works done for Owner shall be harmonized.

Contractor shall submit, at such times reasonably requested by Architect/Engineer, schedules to show order in which Contractor proposes to carry on Work, with dates at which Contractor will start several parts of Work and estimated dates of completion of several parts.

GC-42. EXTENSION OF TIME

Should Contractor be delayed in completion of Work by any act/neglect of Owner, Architect/Engineer, any employee of either, other contractors employed by Owner, changes ordered in Work, strikes, lockouts, fires, and unusual delays by common carriers, unavoidable cause(s) beyond Contractor's control, or any cause which Architect/Engineer decides justifies delay, an extension of time shall be allowed for completing Work, sufficient to compensate for delay, amount of extension determined by Architect/Engineer, provided, however, Contractor shall give Architect/Engineer prompt notice in writing of cause of such delay.

GC-43. HINDRANCES AND DELAYS

No claims shall be made by Contractor for damages resulting from hindrances/delays from any cause (except where Work is stopped by order of Owner for own convenience) during progress of any portion of Work embraced in this Contract. In case said Work shall be stopped by act of Owner, such expense as in judgment of Architect/Engineer is caused by such stoppage of said Work shall be paid by Owner to Contractor.

GC-44. QUANTITIES AND MEASUREMENTS

No extra or customary measurements of any kind allowed, but actual measured and/or computed length, area, solid contents, number, and weight only considered, unless otherwise specifically provided.

GC-45. ESTIMATED QUANTITIES

This Contract, including Specifications, Plans, and estimate, is intended to clearly show all Work to be done and material furnished hereunder. Where estimated quantities are shown for various classes of work to be done and material furnished under this Contract, they are approximate, used only as a basis for estimating probable cost of Work, and comparing proposals offered for Work. It is understood and agreed the actual amount of Work to be done and material furnished under this Contract may differ somewhat from these estimates, and where basis for payment under this Contract is unit price method, payment shall be for actual amount of such work done and material furnished.

Where payment is based on unit price method, Contractor agrees to make no claim for damages, anticipated profits, or otherwise on account of any differences found between quantities of Work actually done, material actually furnished under this Contract, and estimated quantities contemplated and contained in proposal; provided, however, where actual quantity of any major item in this Contract is an estimated quantity and actual quantity of such "major item" varies more than 25 percent above or below estimated quantity stated in this Contract, an equitable adjustment in Contract price shall be made upon demand of either party. Equitable adjustment shall be based upon any increase/decrease in costs due solely to variation above 125 percent or below 75 percent of estimated quantity.

"Major Item" shall be any individual bid item included in proposal with a total cost equal to or greater than 10 percent of total Contract cost, computed on basis of original bid proposal, quantities, and Contract unit prices.

Any revised consideration is to be determined by agreement between parties, otherwise by terms of this Contract, as provided under "Extra Work."

GC-46. PARTIAL PAYMENTS

On/before the last day of each month, Contractor shall prepare for Architect/Engineer review, a statement showing, as completely as practicable, total value of Work done by Contractor for prior month/period. Statement shall also include value of all sound materials delivered on site of Work to be fabricated into Work. Architect/Engineer, after approval, shall submit Contractor's partial pay application to Owner.

Owner shall then pay Contractor total amount of Architect/Engineer's statement, less 5 percent of amount thereof, which 5 percent shall be retained until final payment, and further less all previous payments and all further sums may be retained by Owner under terms of this Contract. It is understood; however, in case whole Work be near to completion and some unexpected and unusual delay occurs due to no fault or neglect on part of Contractor, Owner may, upon Architect/Engineer written recommendation, pay a reasonable and equitable portion of retained percentage to Contractor; or Contractor, at Owner's option, may be relieved of obligation to fully complete Work, and thereupon, Contractor shall receive payment of balance due under Contract subject only to conditions stated under "Final Payment."

GC-47. USE OF COMPLETED PORTIONS

Owner shall have the right to take possession of and use any completed/partially completed portions of Work, notwithstanding time for completing entire work or such portions may not have expired but such taking possession and use shall not be deemed an acceptance of any work not completed in accordance with Contract Documents. If such prior use increases cost of or delays Work, Contractor shall be entitled to such extra compensation, or extension of time, or both, as Architect/Engineer determines.

GC-48. FINAL COMPLETION AND ACCEPTANCE

Within 20 days after Contractor gives Architect/Engineer written notice that Work is complete, Architect/Engineer and Owner shall inspect Work and within said time, if Work is completed in accordance with Contract Documents, Architect/Engineer shall issue to Owner and Contractor a Certificate of Completion, and thereupon it shall be duty of Owner, within 10 days, to issue a Certificate of Acceptance of Work to Contractor.

GC-49. FINAL PAYMENT

Upon issuance of Certificate of Completion, Architect/Engineer shall proceed to make final measurements and prepare final statement of value of all Work performed and materials furnished under terms of Contract and certify same to Owner, who shall pay Contractor on/before the 20th day after date of Certificate of Completion, or if governmental financial assistance is involved, within 30 working days of receipt of Final Payment from applicable governmental authority, balance due Contractor under terms of this Contract, provided full performance of contractual obligations under terms of this Contract; and said payment shall become due in any event upon said performance by Contractor. Neither Certificate of Acceptance, final payment, nor any provision in Contract Documents, shall relieve Contractor of obligation for fulfillment of any warranty required in Special Provisions of Specifications.

GC-50. PAYMENT WITHHELD

Owner may, on account of subsequently discovered evidence, withhold/nullify whole/part of any certificate to such extent as necessary for protection from loss on account of:

a. Defective work not remedied;
b. Claims filed or reasonable evidence indicating possible filing of claims;
c. Contractor failure to make payments properly to subcontractors, for material, or labor; and/or
d. Damage to another contractor.

When grounds removed or Contractor provides a Surety Bond satisfactory to Owner to protect Owner in amount withheld, payment shall be made for amounts withheld because of them.

GC-51. DELAYED PAYMENTS

Should Owner fail to pay Contractor of sum named in any partial/final statement, when payment is due, or Architect/Engineer fails to issue any statement on/before date provided, Owner shall pay Contractor, in addition to sum shown as due by such statement, interest thereon at the rate of 6 percent per annum, unless otherwise specified, from date due as provided under "Partial Payments" and "Final Payments," until fully paid, fully liquidating any injury to Contractor growing out of such delay in payment, but right is expressly reserved to Contractor in the event payments not promptly made as provided under "Partial Payments," to at any time thereafter treat Contract as abandoned by Owner and recover compensation, as provided under "Abandonment of Contract," unless such payments are withheld in accordance with provisions of "Payments Withheld."

GC-52. EXTRA WORK

"Extra Work," as used in this Contract, shall mean/include all Work required by Architect/Engineer or Owner done by Contractor to accomplish any change, alteration, or addition to Work

shown upon Plans, or reasonably implied by Specifications, and not covered by Contractor's Proposal, except as provided under "Changes and Alterations" herein.

It is agreed Contractor shall perform all Extra Work under Architect/Engineer direction when presented with a written Extra Work Order signed by Architect/Engineer, subject, however, to right of Contractor to require a written confirmation of such Extra Work Order by Owner. It is also agreed compensation to be paid Contractor for performing said Extra Work shall be determined by one or more of the following methods:

Method A - By agreed unit prices; or
Method B - By agreed lump sum; or
Method C - If neither Methods A nor B are agreed upon before Extra Work is commenced, Contractor shall be paid "actual field cost" of Work, plus 15 percent.

In the event said Extra Work be performed and paid for under Method C, provisions of this Article shall apply and "actual field cost" defined to include cost of all workmen such as foremen, timekeepers, mechanics, and laborers, and materials, supplies, teams, trucks, rentals on machinery and equipment, for time actually employed/used on such Extra Work, plus actual transportation charges necessarily incurred, together with all expenses incurred directly on account of such Extra Work, including Social Security, Old Age Benefits, Maintenance Bonds, Public Liability and Property Damage, Workmen's Compensation, and all other insurance as required by any law/ordinance, or directed by Architect/Engineer or Owner, or by them agreed to. Architect/Engineer may direct form in which accounts of "actual field cost" shall be kept and records of these accounts made available to Architect/Engineer. Architect/Engineer may also specify in writing, before Work commences, method of doing Work as well as type and kind of machinery and equipment to be used; otherwise, these matters determined by Contractor. Unless otherwise agreed upon, prices for use of machinery and equipment shall be determined by using 100 percent, unless otherwise specified, of the latest schedule of Equipment Ownership Expense adopted by the Associated General Contractors of America. Where practicable, terms and prices for use of machinery and equipment shall be incorporated in Written Extra Work Order. The 15 percent of "actual field cost" paid Contractor, shall cover and compensate profit, overhead, general superintendence and field office expense, and all other elements of cost and expense not embraced within "actual field cost" as herein defined, save that where Contractor's Camp or Field Office must be maintained primarily on account of such Extra Work, then cost to maintain and operate same shall be included in "actual field cost."

No claim for Extra Work of any kind allowed unless Architect/Engineer orders in writing. In case any oral/written orders/instructions appear to Contractor to involve Extra Work for which compensation or adjustment in construction time should be received, Contractor shall make written request to Architect/Engineer for written order authorizing such Extra Work. Should a difference of opinion arise as to what does/does not constitute Extra Work, or as to payment therefor, and Architect/Engineer insists upon performance, Contractor shall proceed with Work after making written request for written order and keep an accurate account of "actual field cost" thereof, as provided under Method C. Contractor will thereby preserve right to submit matter of payment by filing a claim as herein provided.

GC-53. TIME OF FILING CLAIMS

It is further agreed by both parties hereto, all questions of dispute/adjustment presented by Contractor shall be in writing and filed with Architect/Engineer within 15 days after Architect/Engineer gives any directions, order, or instruction to which Contractor desires to take exception. Architect/Engineer shall reply to such written exceptions by Contractor and render a final decision in writing. In case Contractor should appeal from Architect/Engineer's decision, appeal shall be filed with Architect/Engineer and Owner in writing within 10 days after date of delivery to Contractor of Architect/Engineer's final decision. It is further agreed Final Acceptance of Work by Owner and acceptance by Contractor of Final Payment, shall be a bar to any claim by either party, except as noted otherwise in Contract Documents.

GC-54. DELETED

GC-55. ABANDONMENT BY CONTRACTOR

In case Contractor should abandon and fail/refuse to resume work within 10 days after written notification from Owner or Architect/Engineer, or Contractor fails to comply with Architect/Engineer orders, when such orders are consistent with Contract Documents, then if where a Performance Bond exists, Surety on Bond shall be notified in writing and directed to complete Work, and a copy of said notice be delivered to Contractor.

After receiving said notice of abandonment, Contractor shall not remove from Work any machinery, equipment, tools, materials, or supplies on the job, but same, together with any materials and equipment under contract for Work, may be held for use on Work by Owner or Surety on construction bond, or another contractor in completion of Work; and Contractor shall not receive any rental/credit therefor (except when used in connection with Extra Work, where credit allowed as provided for under "Extra Work"), it understood use of such equipment and materials will ultimately reduce cost to complete Work and reflected in final settlement.

If no Performance Bond provided or Surety should fail to commence compliance with notice for completion herein provided for, within 10 days after service of such notice, Owner may provide for completion of Work in either of the following elective manners:

a. Owner may thereupon employ such force of men and use such machinery, equipment, tools, materials, and supplies as Owner deems necessary to complete Work and charge expense of such labor, machinery, equipment, tools, materials, and supplies to Contractor, and expense charged shall be deducted and paid by Owner out of such moneys due or may thereafter any time become due to Contractor under and by virtue of this Contract. In case such expense is less than sum payable under this Contract, if same had been completed by Contractor, then Contractor shall receive the difference. In case such expense is greater than sum payable under this Contract, if same completed by said Contractor, then Contractor and/or Surety shall pay amount of such excess to Owner; or

b. Owner under sealed bids, after five days' notice, published one or more times in a newspaper having general circulation in county of location of Work, may let Contract for completion of Work under substantially same terms and conditions provided in this Contract. In case of any increase in cost to Owner under new contract as compared to what would have been cost under this Contract, such increase shall be charged to Contractor and Surety shall remain bound therefor. However, should cost to complete any such new contract prove less than cost to complete under this Contract, Contractor and/or Surety shall be credited therewith.

When Work shall have been Substantially Completed, Contractor and Surety shall be so notified and Certificates of Completion and Acceptance, as provided herein, issued. Complete itemized statement of Contract accounts, certified to by Architect/Engineer as correct, shall then be prepared and delivered to Contractor and Surety, whereupon Contractor and/or Surety, or Owner as case may be, shall pay balance due as reflected by said statement, within 15 days after date of such Certificate of Completion.

In the event statement of accounts shows cost to complete Work is less cost to Owner, had Work been completed by Contractor under terms of this Contract; or when Contractor and/or Surety shall pay balance shown due by them to Owner, then all machinery, equipment, tools, materials, or supplies left on site of Work shall be turned over to Contractor and/or Surety. Should cost to complete Work exceed Contract price and Contractor and/or his Surety fail to pay amount due Owner within time designated herein, and there remains any machinery, equipment, tools, materials, or supplies on site of Work, notice thereof, together with an itemized list of such equipment and materials shall be mailed to Contractor and Surety at respective addresses designated in this Contract, provided; however, actual written notice given

in any manner will satisfy this condition. After mailing or other giving of such notice, such property shall be held at risk of Contractor and Surety subject only to duty of Owner to exercise ordinary care to protect such property. After 15 days from date of said notice, Owner may sell such machinery, equipment, tools, materials, or supplies and apply net sum derived from such sale to credit of Contractor and Surety. Such sale may be made at public/private sale, with/without notice, as Owner elects. Owner shall release any machinery, equipment, tools, materials, or supplies, which remain on Work, and belong to persons other than Contractor or Surety, to proper owners. Books on all operations provided herein shall be open to Contractor and Surety.

GC-56. ABANDONMENT BY OWNER

In case Owner shall fail to comply with Contract terms and fail/refuse to comply with said terms within 10 days after written notification by Contractor, Contractor may suspend/wholly abandon Work and remove therefrom all machinery, tools, equipment, and all materials on site of work not included in payments to Contractor and have not been wrought into Work. And thereupon Architect/Engineer shall make an estimate of total amount earned by Contractor, which estimate shall include value of all Work actually completed by said Contractor (at prices stated in attached proposal where unit prices are used), value of all partially completed Work at a fair and equitable price, and amount of all Extra Work performed at prices agreed upon, or provided for by terms of this Contract, and a reasonable sum to cover cost of any provisions made by Contractor to carry whole work to completion and which cannot be utilized. Architect/Engineer shall then make a final statement of balance due Contractor by deducting from estimates all previous payments by Owner and other sums retained by Owner under terms of this Contract and certify same to Owner who shall pay to Contractor on or before 30 days after date of notification by Contractor, balance shown by said final statement as due Contractor, under terms of this Agreement.

PACKET 10.87 July 11, 2023

FEDERAL CONTRACT PROVISIONS

FAA
Airports

Contract Provision Guidelines for Obligated Sponsors and Airport Improvement Program Projects

(Issued on January 20, 2023)

ACCESS TO RECORDS AND REPORTS

Contractor must maintain an acceptable cost accounting system. Contractor agrees to provide Owner, the Federal Aviation Administration (FAA) and the Comptroller General of the United States or any of their duly authorized representatives access to any books, documents, papers and records of Contractor which are directly pertinent to the specific contract for the purpose of making audit, examination, excerpts and transcriptions. Contractor agrees to maintain all books, records and reports required under this contract for a period of not less than three years after final payment is made and all pending matters are closed.

NOTICE OF REQUIREMENT FOR AFFIRMATIVE ACTION TO ENSURE EQUAL EMPLOYMENT OPPORTUNITY

1. Offeror's or Bidder's attention is called to the "Equal Opportunity Clause" and "Standard Federal Equal Employment Opportunity Construction Contract Specifications" set forth herein.

2. Goals and timetables for minority and female participation, expressed in percentage terms for Contractor's aggregate workforce in each trade on all construction work in covered area, are as follows:

Timetables

Goals for minority participation for each trade:	19.1%
Goals for female participation in each trade:	6.9%

These goals are applicable to all of Contractor's construction work (whether or not it is Federal or federally assisted) performed in the covered area. If Contractor performs construction work in a geographical area located outside of the covered area, it shall apply the goals established for such geographical area where the work is actually performed. With regard to this second area, Contractor also is subject to the goals for both its federally involved and nonfederally involved construction.

Contractor's compliance with the Executive Order and the regulations in 41 CFR Part 60-4 shall be based on its implementation of the Equal Opportunity Clause, specific affirmative action obligations required by the specifications set forth in 41 CFR 60-4.3(a) and its efforts to meet the goals. The hours of minority and female employment and training must be substantially uniform throughout the length of the contract, and in each trade, and Contractor shall make a good faith effort to employ minorities and women evenly on each of its projects. The transfer of minority or female employees or trainees from Contractor to Contractor or from project to project for the sole purpose of meeting Contractor's goals shall be a violation

of the contract, the Executive Order and the regulations in 41 CFR Part 60-4. Compliance with the goals will be measured against the total work hours performed.

3. Contractor shall provide written notification to the Director of the Office of Federal Contract Compliance Programs (OFCCP) within 10 working days of award of any construction subcontract in excess of $10,000 at any tier for construction work under the contract resulting from this solicitation. The notification shall list the name, address, and telephone number of the subcontractor; employer identification number of the subcontractor; estimated dollar amount of the subcontract; estimated starting and completion dates of the subcontract; and the geographical area in which the subcontract is to be performed.

4. As used in this notice and in the contract resulting from this solicitation, the "covered area" is Midland County and the City of Midland, Texas.

BREACH OF CONTRACT TERMS

Any violation or breach of terms of this contract on the part of Contractor or its subcontractors may result in the suspension or termination of this contract or such other action that may be necessary to enforce the rights of the parties of this agreement.

Owner will provide *Contractor* written notice that describes the nature of the breach and corrective actions Contractor must undertake in order to avoid termination of the contract. Owner reserves the right to withhold payments to Contractor until such time Contractor corrects the breach or Owner elects to terminate the contract. Owner's notice will identify a specific date by which Contractor must correct the breach. Owner may proceed with termination of the contract if Contractor fails to correct the breach by the deadline indicated in Owner's notice.

The duties and obligations imposed by the Contract Documents and the rights and remedies available thereunder are in addition to, and not a limitation of, any duties, obligations, rights and remedies otherwise imposed or available by law.

BUY AMERICAN PREFERENCE

SOURCE

Title 49 USC § 50101

Executive Order 14005, *Ensuring the Future is Made in All of America by All of America's Workers*

Bipartisan Infrastructure Law (Pub. L. No. 117-58), Build America, Buy America (BABA)

APPLICABILITY

Buy American Preference incorporates statutory requirements and policies outlined in the in 49 USC §50101, Executive Order 14005, and BABA.

Section 50101 of 49 USC requires that all steel and manufactured goods used on AIP projects be produced in the United States. This section also gives FAA the ability to issue a waiver to a Sponsor to use non-domestic material on an AIP funded project subject to meeting certain conditions. A Sponsor may request that FAA issue a waiver from the Buy American Preference requirements if FAA finds that:

1) Applying the provision is not in the public interest.
2) Steel or manufactured goods are not available in sufficient quantity or quality in the United States.
3) Cost of components and subcomponents produced in the United States is more than 60 % of the total components of a facility or equipment, and final assembly has taken place in the United States. Items that have an FAA standard specification item number (such as specific airport lighting equipment) are considered the equipment.
4) Applying this provision would increase the cost of the overall project by more than 25 %.

Executive Order 14005 advances the Administration's priority to use terms and conditions of Federal financial assistance awards to maximize the use of goods, products, and materials produced in, and services offered in, the United States. The Order directs, to the extent appropriate and consistent with applicable law, agencies shall partner with the Hollings Manufacturing Extension Partnership (MEP) to conduct supplier scouting to identify American companies that are able to produce goods, products, and materials in the United States that meet Federal procurement needs, prior to consideration of using non-domestic products.

The Bipartisan Infrastructure Law, Build America, Buy America (BABA) Act strengthens Made in America Laws and bolsters America's industrial base, protects national security, and supports high-paying jobs. Under BABA, iron, steel, and certain construction materials are required to be 100% produced in the United States.

Under the Bipartisan Infrastructure Law (Pub. L. No. 117-58) BABA three waivers are available for iron and steel, manufactured products, and construction materials when a Federal agency finds that –

1) Applying the domestic content procurement preference would be inconsistent with the public interest (a "public interest waiver");
2) Types of iron, steel, manufactured products, or construction materials are not produced in the United States in sufficient and reasonably available quantities or of a satisfactory quality (a "nonavailability waiver"); or
3) Inclusion of iron, steel, manufactured products, or construction materials produced in the United States will increase the cost of the overall project by more than 25 % (an "unreasonable cost waiver").

BABA defines construction materials, items that are or consists primarily of non-ferrous metals, plastic and polymer-based products (including polyvinylchloride, composite building materials, and polymers used in fiber optic cables), glass (including optic glass), lumber or drywall.

Items that consist of two or more of the aforementioned materials that have been combined together through a manufacturing process, and items that include at least one of the listed materials combined with a material that is not listed through a manufacturing process, should be treated as manufactured products, rather than as construction materials. For example, a plastic framed sliding window should be treated as a manufactured product while plate glass should be treated as a construction material**.**

Buy America Preference requirements flow down from Sponsor to first tier contractors, who are responsible for ensuring that lower tier contractors and subcontractors are also in compliance.

Note: Buy American Preference does not apply to temporary equipment a contractor uses as a tool of its trade and which does not remain as part of the project.

Required Documentation

FAA Buy American Requests. All applications (requests) for an FAA Buy American Preference Waiver includes, at minimum, a completed Content Percentage Worksheet and Final Assembly Questionnaire. Additional information may be requested from Applicant by FAA. Airport Sponsors, consultants, construction contractors, or equipment manufacturers are responsible for completing and submitting waiver applications. FAA is unable to make a determination on waiver requests with incomplete information. Sponsors must confirm with Bidder or offeror to assess the adequacy of the waiver request and associated information prior to forwarding a waiver request to FAA for action. All FAA waivers forms are available from FAA Buy American Requirements webpage.

Proprietary Confidentiality. Exemption 4 of the Freedom of Information Act protects "trade secrets and commercial or financial information obtained from a person that is privileged or confidential. Proprietary manufacturing and design information submitted to FAA for the purposes of receiving a Buy American Waiver shall not be disclosed outside FAA. FAA will provide a written notification to the Airport Sponsor, manufacturer(s), contractor(s) or supplier(s) when a waiver determination is complete.

Timing of Waiver Requests. Sponsors desiring a Type 2 waiver should submit their waiver request, with justification, *before* issuing a solicitation for bids or a request for proposal for a project.

Sponsor must submit a Type 2, Type 3, or Type 4 waiver request *prior* to executing the contract. FAA will generally not consider waiver requests after execution of the contract except where extraordinary and extenuating circumstances exist.

Buy American Notice of Determination (NOD) Process. FAA Reauthorization Act of 2018 requires that all approved waivers must be posted to FAA's website and remain posted for public comment for 10 days, before becoming effective. All FAA waivers must complete the NOD process. Sponsors are encouraged to wait until approved waivers become effective before executing AIP projects.

Buy American Conformance Lists. FAA Office of Airports maintains listings of projects and products that have received a waiver from the Buy American Preference requirements for project specific and nationwide use. Each of these conformance lists is available online at www.faa.gov/airports/aip/buy_american/. Products listed on FAA Nationwide Buy American Conformance list do not require additional submittal of domestic content information. Nationwide waivers expire five years from the date issued, unless revoked earlier by FAA.

Facility Waiver Requests. For construction of a facility, Sponsor may submit the waiver request after bid opening, but prior to contract execution. Examples of facility construction include terminal buildings, terminal renovation, and snow removal equipment buildings.

Contract Types –

Construction and Equipment – Sponsor must meet the Buy American Preference requirements of 49 USC § 50101 and BABA for all AIP funded projects that require materials that are or consists primarily of iron, steel or manufactured goods and construction materials.

Professional Services – Professional service agreements (PSAs) do not normally result in a deliverable that meets the definition of a manufactured product. However, the emergence of various project delivery methods has created situations where task deliverables under a PSA may include a manufactured product. If a PSA includes providing a manufactured good as a deliverable under the contract, Sponsor must include the Buy American Preference provision in the agreement.

Property – Most land transactions do not involve acquiring a manufactured product. However, under certain circumstances, a property acquisition project could result in the installation of a manufactured product. For example, the installation of property fencing, gates, doors and locks, etc. represent manufactured products acquired under an AIP funded land project that must comply with Buy American Preferences.

Use of Provisions – No mandatory language provided. The following language is acceptable to FAA and meets the intent of this requirement. If Sponsor uses different language, Sponsor's revised language must fully comply with 49 USC § 50101 and BABA.

There are two types of FAA Buy American certifications. Sponsor must incorporate the appropriate certifications of compliance with FAA Buy American Preference in the solicitation:

- **Construction Projects** involving the replacement, rehabilitation, reconstruction of airfield surfaces such as on runways, taxiways, taxilanes, aprons, roadways, parking lots, etc. – Insert the Certificate of compliance to FAA Buy American Preference based on Construction Projects.
- **Equipment and Buildings Projects** involving and including the acquisition of equipment such as snow removal equipment, navigational aids, wind cones, and the construction of buildings such as hangars, terminal development, lighting vaults, aircraft rescue & firefighting buildings, etc. - Insert the Certificate of Compliance with FAA Buy American Preference Based on Equipment/Building Projects.

MODEL SOLICITATION CLAUSES

Certification of Compliance with FAA Buy American Preference Statement

FAA BUY AMERICAN PREFERENCE

Contractor certifies that its bid/offer is in compliance with 49 USC § 50101, BABA and other related Made in America Laws,[1] U.S. statutes, guidance, and FAA policies, which provide that Federal funds may not be obligated unless all iron, steel and manufactured goods used in AIP funded projects are produced in the United States, unless FAA has issued a waiver for the product; the product is listed as an Excepted Article, Material Or Supply in Federal Acquisition Regulation subpart 25.108; or is included in FAA Nationwide Buy American Waivers Issued list.

Bidder or offeror must complete and submit the certification of compliance with FAA's Buy American Preference, BABA and Made in America laws included herein with their bid or offer. The Airport Sponsor/Owner will reject as nonresponsive any bid or offer that does not include a completed certification of compliance with FAA's Buy American Preference and BABA.

Bidder or offeror certifies that all constructions materials, defined to mean an article, material, or supply other than an item of primarily iron or steel; a manufactured product; cement and cementitious materials; aggregates such as stone, sand, or gravel; or aggregate binding agents or additives that are or consist primarily of: non-ferrous metals; plastic and polymer-based products (including polyvinylchloride, composite building materials, and polymers used in fiber optic cables); glass (including optic glass); lumber; or drywall used in the project are manufactured in the U.S.

[1] Per Executive Order 14005 "Made in America Laws" means all statutes, regulations, rules, and Executive Orders relating to federal financial assistance awards or federal procurement, including those that refer to "Buy America" or "Buy American," that require, or provide a preference for, the purchase or acquisition of goods, products, or materials produced in the United States, including iron, steel, and manufactured products offered in the United States.

Certification of Compliance with FAA Buy American Preference – Construction Projects

As a matter of bid responsiveness, bidder/offeror must complete, sign, date, and submit this certification statement with its proposal. Bidder/offeror must indicate how it intends to comply with 49 USC § 50101, BABA and other related Made in America Laws, U.S. statutes, guidance, and FAA policies, by selecting one of the following certification statements. These statements are mutually exclusive. Bidder must select one or the other (i.e., not both) by inserting a checkmark (✓) or "X."

☐ Bidder or offeror hereby certifies to comply with 49 USC § 50101, BABA and other related U.S. statutes, guidance, and policies of FAA by:

a) Only installing iron, steel and manufactured products produced in the United States;
b) Only installing construction materials defined as: an article, material, or supply – other than item of primarily iron or steel; manufactured product; cement and cementitious materials; aggregates such as stone, sand, or gravel; or aggregate binding agents or additives that are or consist primarily of non-ferrous metals; plastic and polymer-based products (including polyvinylchloride, composite building materials, and polymers used in fiber optic cables); glass (including optic glass); lumber or drywall manufactured in the United States.
c) Installing manufactured products for which FAA issued a waiver as indicated by inclusion on the current FAA Nationwide Buy American Waivers Issued listing; or
d) Installing products listed as an Excepted Article, Material or Supply in Federal Acquisition Regulation Subpart 25.108.

By selecting this certification statement, Bidder or offeror agrees:

a) To provide Airport Sponsor or FAA evidence to document source and origin of iron, steel, and/or manufactured product.
b) To faithfully comply with providing U.S. domestic products.
c) To refrain from seeking a waiver request after establishment of contract, unless extenuating circumstances emerge that FAA determines justified.
d) Certify that all construction materials used in the project are manufactured in the U.S.

☐ Bidder or offeror hereby certifies it cannot comply with 100% Buy American Preferences of 49 USC § 50101(a) but may qualify for a Type 3 or 4 waiver under 49 USC § 50101(b). By selecting this certification statement, apparent bidder or offeror with apparent low bid agrees:

a) To submit to Airport Sponsor or FAA within 15 calendar days of being selected as responsive bidder, a formal waiver request and required documentation that supports type of waiver requested.
b) Failure to submit the required documentation within the specified timeframe is cause for a non-responsive determination that may result in rejection of the proposal.
c) To faithfully comply with providing U.S. domestic products at or above the approved U.S. domestic content percentage as approved by FAA.
d) To furnish U.S. domestic product for any waiver request that FAA rejects.
e) To refrain from seeking a waiver request after establishment of the contract, unless extenuating circumstances emerge that FAA determines justified.

Required Documentation

Type 2 Waiver (Nonavailability) - Iron, steel, manufactured goods or construction materials or manufactured goods are not available in sufficient quantity or quality in the United States. The required documentation for the Nonavailability waiver is:

a) Completed Content Percentage Worksheet and Final Assembly Questionnaire
b) Record of thorough market research, consideration where appropriate of qualifying alternate items, products, or materials including;
c) A description of the market research activities and methods used to identify domestically manufactured items capable of satisfying the requirement, including the timing of the research and conclusions reached on the availability of sources.

Type 3 Waiver –Cost of components and subcomponents produced in the United States is more than 60% of cost of all components and subcomponents of "facility/project." Required documentation for a Type 3 waiver is:

a) Completed Content Percentage Worksheet and Final Assembly Questionnaire including;
b) Listing of all manufactured products that are not comprised of 100% U.S. domestic content (excludes products listed on FAA Nationwide Buy American Waivers Issued listing and products excluded by Federal Acquisition Regulation Subpart 25.108; products of unknown origin must be considered as non-domestic products in their entirety).
c) Cost of non-domestic components and subcomponents, excluding labor costs associated with final assembly and installation at project location.
d) Percentage of non-domestic component and subcomponent cost as compared to total "facility" component and subcomponent costs, excluding labor costs associated with final assembly and installation at project location.

Type 4 Waiver (Unreasonable Costs) - Applying this provision for iron, steel, manufactured goods or construction materials would increase the cost of the overall project by more than 25%. The required documentation for this waiver is:

a) A completed Content Percentage Worksheet and Final Assembly Questionnaire from
b) At minimum two comparable equal bids and/or offers;
c) Receipt or record that demonstrates that supplier scouting called for in Executive Order 14005, indicates that no domestic source exists for the project and/or component;
d) Completed waiver applications for each comparable bid and/or offer.

False Statements: Per 49 USC § 47126, this certification concerns a matter within the jurisdiction of FAA and the making of a false, fictitious, or fraudulent certification may render the maker subject to prosecution under Title 18, United States Code.

Date	Signature
Company Name	Title

GENERAL CIVIL RIGHTS PROVISIONS

In all its activities within the scope of its airport program, Contractor agrees to comply with pertinent statutes, Executive Orders, and such rules as identified in Title VI List of Pertinent Nondiscrimination Acts and Authorities to ensure that no person shall, on the grounds of race, color, national origin (including limited English proficiency), creed, sex (including sexual orientation and gender identity), age, or disability be excluded from participating in any activity conducted with or benefiting from Federal assistance.

This provision is in addition to that required by Title VI of the Civil Rights Act of 1964.

Specific Clause that is used for General Contract Agreements

The above provision binds Contractor and subcontractors from the bid solicitation period through the completion of the contract.

Title VI Solicitation Notice:

Midland Air & Space Port (MAF), in accordance with the provisions of Title VI of the Civil Rights Act of 1964 (78 Stat. 252, 42 USC §§ 2000d to 2000d-4) and the Regulations, hereby notifies all bidders or offerors that it will affirmatively ensure that for any contract entered into pursuant to this advertisement, [select businesses, or disadvantaged business enterprises or airport concession disadvantaged business enterprises] will be afforded full and fair opportunity to submit bids in response to this invitation and no businesses will be discriminated against on the grounds of race, color, national origin (including limited English proficiency), creed, sex (including sexual orientation and gender identity), age, or disability in consideration for an award.

Title VI List of Pertinent Nondiscrimination Acts and Authorities

Title VI List of Pertinent Nondiscrimination Acts and Authorities

During the performance of this contract, Contractor, for itself, its assignees, and successors in interest (hereinafter referred to as the "Contractor") agrees to comply with the following non-discrimination statutes and authorities; including but not limited to:

- Title VI of the Civil Rights Act of 1964 (42 USC § 2000d *et seq*., 78 stat. 252) (prohibits discrimination on the basis of race, color, national origin);
- 49 CFR part 21 (Non-discrimination in Federally-Assisted programs of the Department of Transportation—Effectuation of Title VI of the Civil Rights Act of 1964);
- The Uniform Relocation Assistance and Real Property Acquisition Policies Act of 1970, (42 USC § 4601) (prohibits unfair treatment of persons displaced or whose property has been acquired because of Federal or Federal-aid programs and projects);
- Section 504 of the Rehabilitation Act of 1973 (29 USC § 794 *et seq*.), as amended (prohibits discrimination on the basis of disability); and 49 CFR part 27 (Nondiscrimination on the Basis of Disability in Programs or Activities Receiving Federal Financial Assistance);
- Age Discrimination Act of 1975, as amended (42 USC § 6101 *et seq*.) (prohibits discrimination on the basis of age);
- Airport and Airway Improvement Act of 1982 (49 USC § 47123), as amended (prohibits discrimination based on race, creed, color, national origin, or sex);

- Civil Rights Restoration Act of 1987 (PL 100-259) (broadened the scope, coverage and applicability of Title VI of the Civil Rights Act of 1964, the Age Discrimination Act of 1975 and Section 504 of the Rehabilitation Act of 1973, by expanding the definition of the terms "programs or activities" to include all of the programs or activities of the Federal-aid recipients, sub-recipients and contractors, whether such programs or activities are Federally funded or not);
- Titles II and III of the Americans with Disabilities Act of 1990 (42 USC § 12101, et seq) (prohibit discrimination on the basis of disability in the operation of public entities, public and private transportation systems, places of public accommodation, and certain testing entities) as implemented by U.S. Department of Transportation regulations at 49 CFR parts 37 and 38;
- FAA's Nondiscrimination statute (49 USC § 47123) (prohibits discrimination on the basis of race, color, national origin, and sex);
- Executive Order 12898, Federal Actions to Address Environmental Justice in Minority Populations and Low-Income Populations (ensures nondiscrimination against minority populations by discouraging programs, policies, and activities with disproportionately high and adverse human health or environmental effects on minority and low-income populations);
- Executive Order 13166, Improving Access to Services for Persons with Limited English Proficiency, and resulting agency guidance, national origin discrimination includes discrimination because of limited English proficiency (LEP). To ensure compliance with Title VI, you must take reasonable steps to ensure that LEP persons have meaningful access to your programs (70 Fed. Reg. 74087 (2005));
- Title IX of the Education Amendments of 1972, as amended, which prohibits you from discriminating because of sex in education programs or activities (20 USC § 1681, et seq).

Nondiscrimination Requirements/Title VI Clauses for Compliance

Compliance with Nondiscrimination Requirements:

During performance of this contract, Contractor, for itself, its assignees, and successors in interest (hereinafter referred to as the "Contractor"), agrees as follows:

1. **Compliance with Regulations:** Contractor (hereinafter includes consultants) will comply with the Title VI List of Pertinent Nondiscrimination Acts and Authorities, as they may be amended from time to time, which are herein incorporated by reference and made a part of this contract.
2. **Nondiscrimination:** Contractor, with regard to the work performed by it during the contract, will not discriminate on the grounds of race, color, national origin (including limited English proficiency), creed, sex (including sexual orientation and gender identity), age, or disability in the selection and retention of subcontractors, including procurements of materials and leases of equipment. Contractor will not participate directly or indirectly in the discrimination prohibited by the Nondiscrimination Acts and Authorities, including employment practices when the contract covers any activity, project, or program set forth in Appendix B of 49 CFR part 21.
3. **Solicitations for Subcontracts, including Procurements of Materials and Equipment:** In all solicitations, either by competitive bidding or negotiation made by Contractor for work to be performed under a subcontract, including procurements of materials, or leases of equipment, each potential subcontractor or supplier will be notified by Contractor of Contractor's obligations under this contract and the Nondiscrimination Acts and Authorities on the grounds of race, color, or national origin.

4. **Information and Reports:** Contractor will provide all information and reports required by the Acts, the Regulations, and directives issued pursuant thereto and will permit access to its books, records, accounts, other sources of information, and its facilities as may be determined by Sponsor or FAA to be pertinent to ascertain compliance with such Nondiscrimination Acts and Authorities and instructions. Where any information required of a contractor is in the exclusive possession of another who fails or refuses to furnish the information, Contractor will so certify to Sponsor or FAA, as appropriate, and will set forth what efforts it has made to obtain the information.
5. **Sanctions for Noncompliance:** In the event of a Contractor noncompliance with non-discrimination provisions of this contract, Sponsor will impose such contract sanctions as it or FAA may determine to be appropriate, including, but not limited to:
    a. Withholding payments to Contractor under the contract until Contractor complies; and/or
    b. Cancelling, terminating, or suspending a contract, in whole or in part.
6. **Incorporation of Provisions:** Contractor will include the provisions of paragraphs one through six in every subcontract, including procurements of materials and leases of equipment, unless exempt by the Acts, the Regulations, and directives issued pursuant thereto. Contractor will take action with respect to any subcontract or procurement as Sponsor or FAA may direct as a means of enforcing such provisions including sanctions for noncompliance. Provided, that if Contractor becomes involved in, or is threatened with litigation by a subcontractor, or supplier because of such direction, Contractor may request Sponsor to enter into any litigation to protect the interests of Sponsor. In addition, Contractor may request the United States to enter into litigation to protect interests of the United States.

CLEAN AIR AND WATER POLLUTION CONTROL

Contractor agrees to comply with all applicable standards, orders, and regulations issued pursuant to the Clean Air Act (42 USC §§ 7401-7671q) and the Federal Water Pollution Control Act as amended (33 USC §§ 1251-1387). Contractor agrees to report any violation to Owner immediately upon discovery. Owner assumes responsibility for notifying the Environmental Protection Agency (EPA) and FAA.

Contractor must include this requirement in all subcontracts that exceed $150,000.

CONTRACT WORKHOURS AND SAFETY STANDARDS ACT REQUIREMENTS

1. Overtime Requirements.

No contractor or subcontractor contracting for any part of the contract work which may require or involve the employment of laborers or mechanics shall require or permit any such laborer or mechanic, including watchmen and guards, in any workweek in which he or she is employed on such work to work in excess of forty hours in such workweek unless such laborer or mechanic receives compensation at a rate not less than one and one-half times the basic rate of pay for all hours worked in excess of forty hours in such workweek.

2. Violation; Liability for Unpaid Wages; Liquidated Damages.

In the event of any violation of the clause set forth in paragraph (1) of this clause, Contractor and any subcontractor responsible therefor shall be liable for the unpaid wages. In addition, such contractor and subcontractor shall be liable to the United States (in the case of work done under contract for the District of Columbia or a territory, to such District or to such territory), for liquidated damages. Such liquidated damages shall be computed with respect to each individual laborer or mechanic, including watchmen and guards, employed in violation of the clause set forth in paragraph (1) of this clause, in the sum of $29 for each calendar day on which such individual was required or permitted to work in excess of the standard workweek of forty hours without payment of the overtime wages required by the clause set forth in paragraph (1) of this clause.

3. Withholding for Unpaid Wages and Liquidated Damages.

FAA or Owner shall upon its own action or upon written request of an authorized representative of the Department of Labor withhold or cause to be withheld, from any moneys payable on account of work performed by Contractor or subcontractor under any such contract or any other Federal contract with the same prime contractor, or any other federally-assisted contract subject to the Contract Work Hours and Safety Standards Act, which is held by the same prime contractor, such sums as may be determined to be necessary to satisfy any liabilities of such contractor or subcontractor for unpaid wages and liquidated damages as provided in the clause set forth in paragraph (2) of this clause.

4. Subcontractors.

Contractor or subcontractor shall insert in any subcontracts the clauses set forth in paragraphs (1) through (4) and also a clause requiring the subcontractor to include these clauses in any lower tier subcontracts. Prime Contractor shall be responsible for compliance by any subcontractor or lower tier subcontractor with the clauses set forth in paragraphs (1) through (4) of this clause.

COPELAND "ANTI-KICKBACK" ACT

Contractor must comply with the requirements of the Copeland "Anti-Kickback" Act (18 USC 874 and 40 USC 3145), as supplemented by Department of Labor regulation 29 CFR part 3. Contractor and subcontractors are prohibited from inducing, by any means, any person employed on the project to give up any part of the compensation to which the employee is entitled. Contractor and each Subcontractor must submit to Owner, a weekly statement on the wages paid to each employee performing on covered work during the prior week. Owner must report any violations of the Act to FAA.

DAVIS-BACON REQUIREMENTS

1. Minimum Wages.

(i) All laborers and mechanics employed or working upon the site of the work will be paid unconditionally and not less often than once a week, and without subsequent deduction or rebate on any account (except such payroll deductions as are permitted by the Secretary of Labor under the Copeland Act (29 CFR Part 3)), the full amount of wages and bona fide fringe benefits (or cash equivalent thereof) due at time of payment computed at rates not less than those contained in the wage determination of the Secretary of

Labor which is attached hereto and made a part hereof, regardless of any contractual relationship which may be alleged to exist between Contractor and such laborers and mechanics.

Contributions made or costs reasonably anticipated for bona fide fringe benefits under section 1(b)(2) of the Davis-Bacon Act on behalf of laborers or mechanics are considered wages paid to such laborers or mechanics, subject to the provisions of paragraph (1)(iv) of this section; also, regular contributions made or costs incurred for more than a weekly period (but not less often than quarterly) under plans, funds, or programs which cover the particular weekly period, are deemed to be constructively made or incurred during such weekly period. Such laborers and mechanics shall be paid the appropriate wage rate and fringe benefits on the wage determination for the classification of work actually performed, without regard to skill, except as provided in 29 CFR § 5.5(a)(4). Laborers or mechanics performing work in more than one classification may be compensated at the rate specified for each classification for the time actually worked therein: *Provided,* that the employer's payroll records accurately set forth the time spent in each classification in which work is performed. The wage determination (including any additional classification and wage rates conformed under (1)(ii) of this section) and the Davis-Bacon poster (WH-1321) shall be posted at all times by Contractor and its subcontractors at the site of the work in a prominent and accessible place where it can easily be seen by the workers.

(ii)(A) The contracting officer shall require that any class of laborers or mechanics, including helpers, which is not listed in the wage determination and which is to be employed under the contract shall be classified in conformance with the wage determination. The contracting officer shall approve an additional classification and wage rate and fringe benefits therefore only when the following criteria have been met:

(1) The work to be performed by the classification requested is not performed by a classification in the wage determination;

(2) The classification is utilized in the area by the construction industry; and

(3) The proposed wage rate, including any bona fide fringe benefits, bears a reasonable relationship to the wage rates contained in the wage determination.

(B) If Contractor and the laborers and mechanics to be employed in the classification (if known), or their representatives, and the contracting officer agree on the classification and wage rate (including the amount designated for fringe benefits where appropriate), a report of the action taken shall be sent by the contracting officer to the Administrator of the Wage and Hour Division, U.S. Department of Labor, Washington, DC 20210. The Administrator, or an authorized representative, will approve, modify, or disapprove every additional classification action within 30 days of receipt and so advise the contracting officer or will notify the contracting officer within the 30-day period that additional time is necessary.

(C) In the event Contractor, the laborers, or mechanics to be employed in the classification, or their representatives, and the contracting officer do not agree on the proposed classification and wage rate (including the amount designated for fringe benefits, where appropriate), the contracting officer shall refer the questions, including the views of all interested parties and the recommendation of the contracting officer, to the Administrator for determination. The Administrator, or an authorized representative, will issue a determination within 30 days of receipt and so advise the contracting officer or will notify the contracting officer within the 30-day period that additional time is necessary.

(D) The wage rate (including fringe benefits where appropriate) determined pursuant to subparagraphs (1)(ii) (B) or (C) of this paragraph, shall be paid to all workers performing work in the classification under this contract from the first day on which work is performed in the classification.

(iii) Whenever the minimum wage rate prescribed in the contract for a class of laborers or mechanics includes a fringe benefit which is not expressed as an hourly rate, Contractor shall either pay the benefit as stated in the wage determination or shall pay another bona fide fringe benefit or an hourly cash equivalent thereof.

(iv) If Contractor does not make payments to a trustee or other third person, Contractor may consider as part of the wages of any laborer or mechanic the amount of any costs reasonably anticipated in providing bona fide fringe benefits under a plan or program, *Provided,* that the Secretary of Labor has found, upon the written request of Contractor, that the applicable standards of the Davis-Bacon Act have been met. The Secretary of Labor may require Contractor to set aside in a separate account assets for the meeting of obligations under the plan or program.

2. Withholding. FAA or Sponsor shall upon its own action or upon written request of an authorized representative of the Department of Labor withhold or cause to be withheld from Contractor under this contract or any other Federal contract with the same prime contractor, or any other federally-assisted contract subject to Davis-Bacon prevailing wage requirements, which is held by the same prime contractor, so much of the accrued payments or advances as may be considered necessary to pay laborers and mechanics, including apprentices, trainees, and helpers, employed by Contractor or any subcontractor the full amount of wages required by the contract. In the event of failure to pay any laborer or mechanic, including any apprentice, trainee, or helper, employed or working on the site of the work, all or part of the wages required by the contract, FAA may, after written notice to Contractor, Sponsor, Applicant, or Owner, take such action as may be necessary to cause the suspension of any further payment, advance, or guarantee of funds until such violations have ceased.

3. Payrolls and Basic Records.

(i) Payrolls and basic records relating thereto shall be maintained by Contractor during the course of the work and preserved for a period of three years thereafter for all laborers and mechanics working at the site of the work. Such records shall contain the name, address, and social security number of each such worker; his or her correct classification; hourly rates of wages paid (including rates of contributions or costs anticipated for bona fide fringe benefits or cash equivalents thereof of the types described in 1(b)(2)(B) of the Davis-Bacon Act); daily and weekly number of hours worked; deductions made; and actual wages paid. Whenever the Secretary of Labor has found under 29 CFR 5.5(a)(1)(iv) that the wages of any laborer or mechanic include the amount of any costs reasonably anticipated in providing benefits under a plan or program described in section 1(b)(2)(B) of the Davis-Bacon Act, Contractor shall maintain records that show that the commitment to provide such benefits is enforceable, that the plan or program is financially responsible, and that the plan or program has been communicated in writing to the laborers or mechanics affected, and records which show the costs anticipated or the actual costs incurred in providing such benefits. Contractors employing apprentices or trainees under approved programs shall maintain written evidence of the registration of apprenticeship programs and certification of trainee programs, the registration of the apprentices and trainees, and the ratios and wage rates prescribed in the applicable programs.

(ii)(A) Contractor shall submit weekly for each week in which any contract work is performed a copy of all payrolls to FAA if the agency is a party to the contract, but if the agency is not such a party, Contractor will submit the payrolls to Applicant, Sponsor, or Owner, as the case may be, for transmission to FAA. The payrolls submitted shall set out accurately and completely all of the information required to be maintained under 29 CFR § 5.5(a)(3)(i), except that full social security numbers and home addresses shall not be included on weekly transmittals. Instead the payrolls shall only need to include an individually identifying number for each employee (*e.g.,* the last four digits of the employee's social security number). The required weekly payroll information may be submitted in any form desired. Optional Form WH–347 is available for this purpose from the Wage and Hour Division Web site at *http://www.dol.gov/esa/whd/forms/wh347instr.htm* or its successor site. Prime Contractor is responsible for the submission of copies of payrolls by all subcontractors. Contractors and subcontractors shall maintain the full social security number and current address of each covered worker and shall provide them upon request to FAA if the agency is a party to the contract, but if the agency is not such a party, Contractor will submit them to Applicant, Sponsor, or Owner, as the case may be, for transmission to FAA, Contractor, or the Wage and Hour Division of the Department of Labor for purposes of an investigation or audit of compliance with prevailing wage requirements. It is not a violation of this section for a prime contractor to require a subcontractor to provide addresses and social security numbers to Prime Contractor for its own records, without weekly submission to Sponsoring government agency (or Applicant, Sponsor, or Owner).

(B) Each payroll submitted shall be accompanied by a "Statement of Compliance," signed by Contractor or subcontractor or his or her agent who pays or supervises the payment of the persons employed under the contract and shall certify the following:

(1) That the payroll for the payroll period contains the information required to be provided under 29 CFR § 5.5(a)(3)(ii), the appropriate information is being maintained under 29 CFR § 5.5 (a)(3)(i), and that such information is correct and complete;

(2) That each laborer and mechanic (including each helper, apprentice, and trainee) employed on the contract during the payroll period has been paid the full weekly wages earned, without rebate, either directly or indirectly, and that no deductions have been made either directly or indirectly from the full wages earned, other than permissible deductions as set forth in Regulations, 29 CFR Part 3;

(3) That each laborer or mechanic has been paid not less than the applicable wage rates and fringe benefits or cash equivalents for the classification of work performed, as specified in the applicable wage determination incorporated into the contract.

(C) The weekly submission of a properly executed certification set forth on the reverse side of Optional Form WH-347 shall satisfy the requirement for submission of the "Statement of Compliance" required by paragraph (3)(ii)(B) of this section.

(D) The falsification of any of the above certifications may subject Contractor or subcontractor to civil or criminal prosecution under Section 1001 of Title 18 and Section 231 of Title 31 of the United States Code.

(iii) Contractor or subcontractor shall make the records required under paragraph (3)(i) of this section available for inspection, copying, or transcription by authorized representatives of Sponsor, FAA, or the Department of Labor and shall permit such representatives to interview employees during working hours on the job. If Contractor or subcontractor fails to submit the required records or to make them available,

the Federal agency may, after written notice to Contractor, Sponsor, applicant, or Owner, take such action as may be necessary to cause the suspension of any further payment, advance, or guarantee of funds. Furthermore, failure to submit the required records upon request or to make such records available may be grounds for debarment action pursuant to 29 CFR § 5.12.

4. Apprentices and Trainees.

(i) Apprentices. Apprentices will be permitted to work at less than the predetermined rate for the work they performed when they are employed pursuant to and individually registered in a bona fide apprenticeship program registered with the U.S. Department of Labor, Employment and Training Administration, Office of Apprenticeship Training, Employer and Labor Services, or with a State Apprenticeship Agency recognized by the Office, or if a person is employed in his or her first 90 days of probationary employment as an apprentice in such an apprenticeship program, who is not individually registered in the program, but who has been certified by the Office of Apprenticeship Training, Employer and Labor Services or a State Apprenticeship Agency (where appropriate) to be eligible for probationary employment as an apprentice. The allowable ratio of apprentices to journeymen on the job site in any craft classification shall not be greater than the ratio permitted to Contractor as to the entire work force under the registered program. Any worker listed on a payroll at an apprentice wage rate, who is not registered or otherwise employed as stated above, shall be paid not less than the applicable wage rate on the wage determination for the classification of work actually performed. In addition, any apprentice performing work on the job site in excess of the ratio permitted under the registered program shall be paid not less than the applicable wage rate on the wage determination for the work actually performed. Where a contractor is performing construction on a project in a locality other than that in which its program is registered, the ratios and wage rates (expressed in percentages of the journeyman's hourly rate) specified in Contractor's or subcontractor's registered program shall be observed. Every apprentice must be paid at not less than the rate specified in the registered program for the apprentice's level of progress, expressed as a percentage of the journeymen hourly rate specified in the applicable wage determination. Apprentices shall be paid fringe benefits in accordance with the provisions of the apprenticeship program. If the apprenticeship program does not specify fringe benefits, apprentices must be paid the full amount of fringe benefits listed on the wage determination for the applicable classification. If the Administrator determines that a different practice prevails for the applicable apprentice classification, fringes shall be paid in accordance with that determination. In the event the Office of Apprenticeship Training, Employer and Labor Services, or a State Apprenticeship Agency recognized by the Office, withdraws approval of an apprenticeship program, Contractor will no longer be permitted to utilize apprentices at less than the applicable predetermined rate for the work performed until an acceptable program is approved.

(ii) Trainees. Except as provided in 29 CFR § 5.16, trainees will not be permitted to work at less than the predetermined rate for the work performed unless they are employed pursuant to and individually registered in a program which has received prior approval, evidenced by formal certification by the U.S. Department of Labor, Employment and Training Administration. The ratio of trainees to journeymen on the job site shall not be greater than permitted under the plan approved by the Employment and Training Administration. Every trainee must be paid at not less than the rate specified in the approved program for the trainee's level of progress, expressed as a percentage of the journeyman hourly rate specified in the applicable wage determination. Trainees shall be paid fringe benefits in accordance with the provisions of the trainee program. If the trainee program does not mention fringe benefits, trainees shall be paid the

full amount of fringe benefits listed on the wage determination unless the Administrator of the Wage and Hour Division determines that there is an apprenticeship program associated with the corresponding journeyman wage rate on the wage determination that provides for less than full fringe benefits for apprentices. Any employee listed on the payroll at a trainee rate that is not registered and participating in a training plan approved by the Employment and Training Administration shall be paid not less than the applicable wage rate on the wage determination for the classification of work actually performed. In addition, any trainee performing work on the job site in excess of the ratio permitted under the registered program shall be paid not less than the applicable wage rate on the wage determination for the work actually performed. In the event the Employment and Training Administration withdraws approval of a training program, Contractor will no longer be permitted to utilize trainees at less than the applicable predetermined rate for the work performed until an acceptable program is approved.

(iii) Equal Employment Opportunity. The utilization of apprentices, trainees, and journeymen under this part shall be in conformity with the equal employment opportunity requirements of Executive Order 11246, as amended, and 29 CFR Part 30.

5. Compliance with Copeland Act Requirements.

Contractor shall comply with the requirements of 29 CFR Part 3, which are incorporated by reference in this contract.

6. Subcontracts.

Contractor or subcontractor shall insert in any subcontracts the clauses contained in 29 CFR §§ 5.5(a)(1) through (10) and such other clauses as FAA may by appropriate instructions require, and also a clause requiring the subcontractors to include these clauses in any lower tier subcontracts. Prime Contractor shall be responsible for the compliance by any subcontractor or lower tier subcontractor with all the contract clauses in 29 CFR § 5.5.

7. Contract Termination: Debarment.

A breach of the contract clauses in paragraph 1 through 10 of this section may be grounds for termination of the contract, and for debarment as a contractor and a subcontractor as provided in 29 CFR § 5.12.

8. Compliance with Davis-Bacon and Related Act Requirements.

All rulings and interpretations of the Davis-Bacon and Related Acts contained in 29 CFR Parts 1, 3, and 5 are herein incorporated by reference in this contract.

9. Disputes Concerning Labor Standards.

Disputes arising out of the labor standards provisions of this contract shall not be subject to the general disputes clause of this contract. Such disputes shall be resolved in accordance with the procedures of the Department of Labor set forth in 29 CFR Parts 5, 6, and 7. Disputes within the meaning of this clause include disputes between Contractor (or any of its subcontractors) and the contracting agency, the U.S. Department of Labor, or the employees or their representatives.

10. Certification of Eligibility.

(i) By entering into this contract, Contractor certifies that neither it (nor he or she) nor any person or firm who has an interest in Contractor's firm is a person or firm ineligible to be awarded Government contracts by virtue of section 3(a) of the Davis-Bacon Act or 29 CFR § 5.12(a)(1).

(ii) No part of this contract shall be subcontracted to any person or firm ineligible for award of a Government contract by virtue of section 3(a) of the Davis-Bacon Act or 29 CFR § 5.12(a)(1).

(iii) The penalty for making false statements is prescribed in the U.S. Criminal Code, 18 USC § 1001.

CERTIFICATION OF OFFEROR/BIDDER REGARDING DEBARMENT

By submitting a bid/proposal under this solicitation, Bidder or offeror certifies that neither it nor its principals are presently debarred or suspended by any Federal department or agency from participation in this transaction.

CERTIFICATION OF LOWER TIER CONTRACTORS REGARDING DEBARMENT

Successful bidder, by administering each lower tier subcontract that exceeds $25,000 as a "covered transaction", must confirm each lower tier participant of a "covered transaction" under the project is not presently debarred or otherwise disqualified from participation in this federally-assisted project. The successful bidder will accomplish this by:

1. Checking the System for Award Management at website: http://www.sam.gov.
2. Collecting a certification statement similar to Certification of Offeror /Bidder Regarding Debarment.
3. Inserting a clause or condition in the covered transaction with the lower tier contract.

If FAA later determines that a lower tier participant failed to disclose to a higher tier participant that it was excluded or disqualified at the time it entered the covered transaction, FAA may pursue any available remedies, including suspension and debarment of the non-compliant participant.

DISADVANTAGED BUSINESS ENTERPRISE

Bid Information Submitted as a matter of **responsiveness**:

Owner's award of this contract is conditioned upon Bidder or Offeror satisfying the good faith effort requirements of 49 CFR § 26.53.

As a condition of responsiveness, Bidder or Offeror must submit the following information with its proposal on the forms provided herein:

1) Names and addresses of Disadvantaged Business Enterprise (DBE) firms that will participate in the contract;
2) A description of the work that each DBE firm will perform;
3) The dollar amount of the participation of each DBE firm listed under (1);
4) Written statement from Bidder or Offeror that attests their commitment to use the DBE firm(s) listed under (1) to meet Owner's project goal

5) Written confirmation from each listed DBE firm that it is participating in the contract in the kind and amount of work provided in Prime Contractor's commitment; and
6) If Bidder or Offeror cannot meet the advertised project DBE goal, evidence of good faith efforts undertaken by Bidder or Offeror as described in appendix A to 49 CFR part 26. The documentation of good faith efforts must include copies of each DBE and non-DBE subcontractor quote submitted to Bidder when a non-DBE subcontractor was selected over a DBE for work on the contract.

Bid Information submitted as a matter of **responsibility**:

Owner's award of this contract is conditioned upon Bidder or Offeror satisfying the good faith effort requirements of 49 CFR § 26.53.

As a condition of responsibility, every Bidder or Offeror must submit the following information on the forms provided herein within five days after bid opening.

1) The names and addresses of Disadvantaged Business Enterprise (DBE) firms that will participate in the contract;
2) A description of the work that each DBE firm will perform;
3) The dollar amount of the participation of each DBE firm listed under (1);
4) Written statement from Bidder or Offeror that attests their commitment to use the DBE firm(s) listed under (1) to meet Owner's project goal;
5) Written confirmation from each listed DBE firm that it is participating in the contract in the kind and amount of work provided in Prime Contractor's commitment; and
6) If Bidder or Offeror cannot meet the advertised project DBE goal, evidence of good faith efforts undertaken by Bidder or Offeror as described in appendix A to 49 CFR part 26. The documentation of good faith efforts must include copies of each DBE and non-DBE subcontractor quote submitted to Bidder when a non-DBE subcontractor was selected over a DBE for work on the contract.

Contract Assurance (49 CFR § 26.13)

Contractor, subrecipient or subcontractor shall not discriminate on the basis of race, color, national origin, or sex in the performance of this contract. Contractor shall carry out applicable requirements of 49 CFR part 26 in the award and administration of DOT-assisted contracts. Failure by Contractor to carry out these requirements is a material breach of this contract, which may result in the termination of this contract or such other remedy as the recipient deems appropriate, which may include, but is not limited to:

1) Withholding monthly progress payments;
2) Assessing sanctions;
3) Liquidated damages; and/or
4) Disqualifying Contractor from future bidding as non-responsible.

Prompt Payment (49 CFR § 26.29)

Prime contractor agrees to pay each subcontractor under this prime contract for satisfactory performance of its contract no later than 30 days from the receipt of each payment Prime Contractor receives from City of Midland, Texas. Prime Contractor agrees further to return retainage payments to each subcontractor within 30 days after the subcontractor's work is satisfactorily completed. Any delay or postponement of

payment from the above referenced time frame may occur only for good cause following written approval of the City of Midland, Texas. This clause applies to both DBE and non-DBE subcontractors.

Termination of DBE Subcontracts (49 CFR § 26.53(f))

Prime Contractor must not terminate a DBE subcontractor listed in response to Bid Proposal (or an approved substitute DBE firm) without prior written consent of City of Midland, Texas. This includes, but is not limited to, instances in which Prime Contractor seeks to perform work originally designated for a DBE subcontractor with its own forces or those of an affiliate, a non-DBE firm, or with another DBE firm.

Prime Contractor shall utilize the specific DBEs listed to perform the work and supply the materials for which each is listed unless Contractor obtains written consent City of Midland, Texas. Unless City of Midland, Texas consent is provided, Prime Contractor shall not be entitled to any payment for work or material unless it is performed or supplied by the listed DBE.

City of Midland, Texas may provide such written consent only if City of Midland, Texas agrees, for reasons stated in the concurrence document, that Prime Contractor has good cause to terminate the DBE firm. For purposes of this paragraph, good cause includes the circumstances listed in 49 CFR §26.53.

Before transmitting to City of Midland, Texas its request to terminate and/or substitute a DBE subcontractor, Prime Contractor must give notice in writing to the DBE subcontractor, with a copy to City of Midland, Texas, of its intent to request to terminate and/or substitute, and the reason for the request.

Prime Contractor must give the DBE five days to respond to Prime Contractor's notice and advise City of Midland, Texas and Contractor of the reasons, if any, why it objects to the proposed termination of its subcontract and why City of Midland, Texas should not approve Prime Contractor's action. If required in a particular case as a matter of public necessity (e.g., safety), City of Midland, Texas may provide a response period shorter than five days.

In addition to post-award terminations, the provisions of this section apply to preaward deletions of or substitutions for DBE firms put forward by offerors in negotiated procurements.

TEXTING WHEN DRIVING

In accordance with Executive Order 13513, “Federal Leadership on Reducing Text Messaging While Driving”, (10/1/2009) and DOT Order 3902.10, “Text Messaging While Driving”, (12/30/2009), FAA encourages recipients of Federal grant funds to adopt and enforce safety policies that decrease crashes by distracted drivers, including policies to ban text messaging while driving when performing work related to a grant or subgrant.

In support of this initiative, Owner encourages Contractor to promote policies and initiatives for its employees and other work personnel that decrease crashes by distracted drivers, including policies that ban text messaging while driving motor vehicles while performing work activities associated with the project. Contractor must include the substance of this clause in all sub-tier contracts exceeding $10,000 that involve driving a motor vehicle in performance of work activities associated with the project.

PROHIBITION ON CERTAIN TELECOMMUNICATIONS AND VIDEO SURVEILLANCE SERVICES OR EQUIPMENT

Contractor and Subcontractor agree to comply with mandatory standards and policies relating to use and procurement of certain telecommunications and video surveillance services or equipment in compliance with the National Defense Authorization Act.

EQUAL OPPORTUNITY CLAUSE

During the performance of this contract, Contractor agrees as follows:

(1) Contractor will not discriminate against any employee or applicant for employment because of race, color, religion, sex, sexual orientation, gender identity, or national origin. Contractor will take affirmative action to ensure that applicants are employed, and that employees are treated during employment, without regard to their race, color, religion, sex, sexual orientation, gender identify, or national origin. Such action shall include, but not be limited to, the following: employment, upgrading, demotion, or transfer; recruitment or recruitment advertising; layoff, or termination; rates of pay or other forms of compensation; and selection for training, including apprenticeship. Contractor agrees to post in conspicuous places, available to employees and applicants for employment, notices to be provided setting forth the provisions of this nondiscrimination clause.

(2) Contractor will, in all solicitations or advertisements for employees placed by or on behalf of Contractor, state that all qualified applicants will receive consideration for employment without regard to race, color, religion, sex, sexual orientation, gender identity, or national origin.

(3) Contractor will not discharge or in any other manner discriminate against any employee or applicant for employment because such employee or applicant has inquired about, discussed, or disclosed the compensation of the employee or applicant or another employee or applicant. This provision shall not apply to instances in which an employee who has access to the compensation information of other employees or applicants as a part of such employee's essential job functions discloses the compensation of such other employees or applicants to individuals who do not otherwise have access to such information, unless such disclosure is in response to a formal complaint or charge, in furtherance of an investigation, proceeding, hearing, or action, including an investigation conducted by the employer, or is consistent with Contractor's legal duty to furnish information.

(4) Contractor will send to each labor union or representative of workers with which it has a collective bargaining agreement or other contract or understanding, a notice to be provided by the agency contracting officer, advising the labor union or workers' representative of Contractor's commitments under this section 202 of Executive Order 11246 of September 24, 1965, and shall post copies of the notice in conspicuous places available to employees and applicants for employment.

(5) Contractor will comply with all provisions of Executive Order 11246 of September 24, 1965, and of the rules, regulations, and relevant orders of the Secretary of Labor.

(6) Contractor will furnish all information and reports required by Executive Order 11246 of September 24, 1965, and by the rules, regulations, and orders of the Secretary of Labor, or pursuant thereto, and will

permit access to his books, records, and accounts by the contracting agency and the Secretary of Labor for purposes of investigation to ascertain compliance with such rules, regulations, and orders.

(7) In the event of Contractor's noncompliance with the nondiscrimination clauses of this contract or with any such rules, regulations, or orders, this contract may be canceled, terminated, or suspended in whole or in part and Contractor may be declared ineligible for further Government contracts in accordance with procedures authorized in Executive Order 11246 of September 24, 1965, and such other sanctions may be imposed and remedies invoked as provided in Executive Order 11246 of September 24, 1965, or by rule, regulation, or order of the Secretary of Labor, or as otherwise provided by law.

(8) Contractor will include the provisions of paragraphs (1) through (8) in every subcontract or purchase order unless exempted by rules, regulations, or orders of the Secretary of Labor issued pursuant to section 204 of Executive Order 11246 of September 24, 1965, so that such provisions will be binding upon each subcontractor or vendor. Contractor will take such action with respect to any subcontract or purchase order as may be directed by the Secretary of Labor as a means of enforcing such provisions, including sanctions for noncompliance*: Provided,* however, that in the event Contractor becomes involved in, or is threatened with, litigation with a subcontractor or vendor as a result of such direction, Contractor may request the United States to enter into such litigation to protect the interests of the United States.

STANDARD FEDERAL EQUAL EMPLOYMENT OPPORTUNITY
CONSTRUCTION CONTRACT SPECIFICATIONS

1. As used in these specifications:

a. "Covered area" means the geographical area described in the solicitation from which this contract resulted;

b. "Director" means Director, Office of Federal Contract Compliance Programs (OFCCP), U.S. Department of Labor, or any person to whom the Director delegates authority;

c. "Employer identification number" means the Federal social security number used on the Employer's Quarterly Federal Tax Return, U.S. Treasury Department Form 941;

d. "Minority" includes:

(1) Black (all persons having origins in any of the Black African racial groups not of Hispanic origin);

(2) Hispanic (all persons of Mexican, Puerto Rican, Cuban, Central or South American, or other Spanish culture or origin, regardless of race);

(3) Asian and Pacific Islander (all persons having origins in any of the original peoples of the Far East, Southeast Asia, the Indian Subcontinent, or the Pacific Islands); and

(4) American Indian or Alaskan native (all persons having origins in any of the original peoples of North America and maintaining identifiable tribal affiliations through membership and participation or community identification).

2. Whenever Contractor, or any subcontractor at any tier, subcontracts a portion of the work involving any construction trade, it shall physically include in each subcontract in excess of $10,000 the provisions

of these specifications and the Notice which contains the applicable goals for minority and female participation and which is set forth in the solicitations from which this contract resulted.

3. If Contractor is participating (pursuant to 41 CFR part 60-4.5) in a Hometown Plan approved by the U.S. Department of Labor in the covered area either individually or through an association, its affirmative action obligations on all work in the Plan area (including goals and timetables) shall be in accordance with that Plan for those trades which have unions participating in the Plan. Contractors must be able to demonstrate their participation in and compliance with the provisions of any such Hometown Plan. Each contractor or subcontractor participating in an approved plan is individually required to comply with its obligations under the EEO clause and to make a good faith effort to achieve each goal under the Plan in each trade in which it has employees. The overall good faith performance by other contractors or subcontractors toward a goal in an approved Plan does not excuse any covered contractor's or subcontractor's failure to take good faith efforts to achieve the Plan goals and timetables.

4. Contractor shall implement the specific affirmative action standards provided in paragraphs 7a through 7p of these specifications. The goals set forth in the solicitation from which this contract resulted are expressed as percentages of the total hours of employment and training of minority and female utilization Contractor should reasonably be able to achieve in each construction trade in which it has employees in the covered area. Covered construction contractors performing construction work in a geographical areas where they do not have a Federal or federally assisted construction contract shall apply the minority and female goals established for the geographical area where the work is being performed. Goals are published periodically in the Federal Register in notice form, and such notices may be obtained from any Office of Federal Contract Compliance Programs office or from Federal procurement contracting officers. Contractor is expected to make substantially uniform progress in meeting its goals in each craft during the period specified.

5. Neither the provisions of any collective bargaining agreement, nor the failure by a union with whom Contractor has a collective bargaining agreement, to refer either minorities or women shall excuse Contractor's obligations under these specifications, Executive Order 11246, or the regulations promulgated pursuant thereto.

6. In order for the nonworking training hours of apprentices and trainees to be counted in meeting the goals, such apprentices and trainees must be employed by Contractor during the training period, and Contractor must have made a commitment to employ the apprentices and trainees at the completion of their training, subject to the availability of employment opportunities. Trainees must be trained pursuant to training programs approved by the U.S. Department of Labor.

7. Contractor shall take specific affirmative actions to ensure equal employment opportunity. The evaluation of Contractor's compliance with these specifications shall be based upon its effort to achieve maximum results from its actions. Contractor shall document these efforts fully, and shall implement affirmative action steps at least as extensive as the following:

a. Ensure and maintain a working environment free of harassment, intimidation, and coercion at all sites, and in all facilities at which Contractor's employees are assigned to work. Contractor, where possible, will assign two or more women to each construction project. Contractor shall specifically ensure that all foremen, superintendents, and other onsite supervisory personnel are aware of and

carry out Contractor's obligation to maintain such a working environment, with specific attention to minority or female individuals working at such sites or in such facilities.

b. Establish and maintain a current list of minority and female recruitment sources, provide written notification to minority and female recruitment sources and to community organizations when Contractor or its unions have employment opportunities available, and maintain a record of the organizations' responses.

c. Maintain a current file of the names, addresses, and telephone numbers of each minority and female off-the-street applicant and minority or female referral from a union, a recruitment source, or community organization and of what action was taken with respect to each such individual. If such individual was sent to the union hiring hall for referral and was not referred back to Contractor by the union or, if referred, not employed by Contractor, this shall be documented in the file with the reason therefor, along with whatever additional actions Contractor may have taken.

d. Provide immediate written notification to the Director when the union or unions with which Contractor has a collective bargaining agreement has not referred to Contractor a minority person or woman sent by Contractor, or when Contractor has other information that the union referral process has impeded Contractor's efforts to meet its obligations.

e. Develop on-the-job training opportunities and/or participate in training programs for the area which expressly include minorities and women, including upgrading programs and apprenticeship and trainee programs relevant to Contractor's employment needs, especially those programs funded or approved by the Department of Labor. Contractor shall provide notice of these programs to the sources compiled under 7b above.

f. Disseminate Contractor's EEO policy by providing notice of the policy to unions and training programs and requesting their cooperation in assisting Contractor in meeting its EEO obligations; by including it in any policy manual and collective bargaining agreement; by publicizing it in the company newspaper, annual report, etc.; by specific review of the policy with all management personnel and with all minority and female employees at least once a year; and by posting the company EEO policy on bulletin boards accessible to all employees at each location where construction work is performed.

g. Review, at least annually, the company's EEO policy and affirmative action obligations under these specifications with all employees having any responsibility for hiring, assignment, layoff, termination, or other employment decisions including specific review of these items with onsite supervisory personnel such superintendents, general foremen, etc., prior to the initiation of construction work at any job site. A written record shall be made and maintained identifying the time and place of these meetings, persons attending, subject matter discussed, and disposition of the subject matter.

h. Disseminate Contractor's EEO policy externally by including it in any advertising in the news media, specifically including minority and female news media, and providing written notification to and discussing Contractor's EEO policy with other contractors and subcontractors with whom Contractor does or anticipates doing business.

i. Direct its recruitment efforts, both oral and written, to minority, female, and community organizations, to schools with minority and female students and to minority and female recruitment and training organizations serving Contractor's recruitment area and employment needs. Not later than one month prior to the date for the acceptance of applications for apprenticeship or other training by any recruitment source, Contractor shall send written notification to organizations such as the above, describing the openings, screening procedures, and tests to be used in the selection process.

j. Encourage present minority and female employees to recruit other minority persons and women and, where reasonable, provide after school, summer, and vacation employment to minority and female youth both on the site and in other areas of a contractor's work force.

k. Validate all tests and other selection requirements where there is an obligation to do so under 41 CFR part 60-3.

l. Conduct, at least annually, an inventory and evaluation at least of all minority and female personnel, for promotional opportunities and encourage these employees to seek or to prepare for, through appropriate training, etc., such opportunities.

m. Ensure that seniority practices, job classifications, work assignments, and other personnel practices do not have a discriminatory effect by continually monitoring all personnel and employment related activities to ensure that the EEO policy and Contractor's obligations under these specifications are being carried out.

n. Ensure that all facilities and company activities are nonsegregated except that separate or single-user toilet and necessary changing facilities shall be provided to assure privacy between the sexes.

o. Document and maintain a record of all solicitations of offers for subcontracts from minority and female construction contractors and suppliers, including circulation of solicitations to minority and female contractor associations and other business associations.

p. Conduct a review, at least annually, of all supervisor's adherence to and performance under Contractor's EEO policies and affirmative action obligations.

8. Contractors are encouraged to participate in voluntary associations, which assist in fulfilling one or more of their affirmative action obligations (7a through 7p). The efforts of a contractor association, joint contractor-union, contractor-community, or other similar group of which Contractor is a member and participant may be asserted as fulfilling any one or more of its obligations under 7a through 7p of these specifications provided that Contractor actively participates in the group, makes every effort to assure that the group has a positive impact on the employment of minorities and women in the industry, ensures that the concrete benefits of the program are reflected in Contractor's minority and female workforce participation, makes a good faith effort to meet its individual goals and timetables, and can provide access to documentation which demonstrates the effectiveness of actions taken on behalf of Contractor. The obligation to comply, however, is Contractor's and failure of such a group to fulfill an obligation shall not be a defense for Contractor's noncompliance.

9. A single goal for minorities and a separate single goal for women have been established. Contractor, however, is required to provide equal employment opportunity and to take affirmative action for all minority groups, both male and female, and all women, both minority and non-minority. Consequently, Contractor may be in violation of the Executive Order if a particular group is employed in a substantially

disparate manner (for example, even though Contractor has achieved its goals for women generally, Contractor may be in violation of the Executive Order if a specific minority group of women is underutilized).

10. Contractor shall not use the goals and timetables or affirmative action standards to discriminate against any person because of race, color, religion, sex, sexual orientation, gender identity, or national origin.

11. Contractor shall not enter into any subcontract with any person or firm debarred from Government contracts pursuant to Executive Order 11246.

12. Contractor shall carry out such sanctions and penalties for violation of these specifications and of the Equal Opportunity Clause, including suspension, termination, and cancellation of existing subcontracts as may be imposed or ordered pursuant to Executive Order 11246, as amended, and its implementing regulations, by the Office of Federal Contract Compliance Programs. Any contractor who fails to carry out such sanctions and penalties shall be in violation of these specifications and Executive Order 11246, as amended.

13. Contractor, in fulfilling its obligations under these specifications, shall implement specific affirmative action steps, at least as extensive as those standards prescribed in paragraph 7 of these specifications, so as to achieve maximum results from its efforts to ensure equal employment opportunity. If Contractor fails to comply with the requirements of the Executive Order, the implementing regulations, or these specifications, the Director shall proceed in accordance with 41 CFR part 60-4.8.

14. Contractor shall designate a responsible official to monitor all employment related activity to ensure that the company EEO policy is being carried out, to submit reports relating to the provisions hereof as may be required by the Government, and to keep records. Records shall at least include for each employee, the name, address, telephone numbers, construction trade, union affiliation if any, employee identification number when assigned, social security number, race, sex, status (e.g., mechanic, apprentice, trainee, helper, or laborer), dates of changes in status, hours worked per week in the indicated trade, rate of pay, and locations at which the work was performed. Records shall be maintained in an easily understandable and retrievable form; however, to the degree that existing records satisfy this requirement, contractors shall not be required to maintain separate records.

15. Nothing herein provided shall be construed as a limitation upon the application of other laws which establish different standards of compliance or upon the application of requirements for the hiring of local or other area residents (e.g. those under the Public Works Employment Act of 1977 and the Community Development Block Grant Program).

FEDERAL FAIR LABOR STANDARDS ACT (FEDERAL MINIMUM WAGE)

All contracts and subcontracts that result from this solicitation incorporate by reference the provisions of 29 CFR part 201, et seq, the Federal Fair Labor Standards Act (FLSA), with the same force and effect as if given in full text. The FLSA sets minimum wage, overtime pay, recordkeeping, and child labor standards for full and part-time workers.

Contractor has full responsibility to monitor compliance to the referenced statute or regulation. Contractor must address any claims or disputes that arise from this requirement directly with the U.S. Department of Labor – Wage and Hour Division.

CERTIFICATION REGARDING LOBBYING

Bidder or Offeror certifies by signing and submitting this bid or proposal, to the best of his or her knowledge and belief, that:

(1) No Federal appropriated funds have been paid or will be paid, by or on behalf of Bidder or Offeror, to any person for influencing or attempting to influence an officer or employee of an agency, a Member of Congress, an officer or employee of Congress, or an employee of a Member of Congress in connection with the awarding of any Federal contract, the making of any Federal grant, the making of any Federal loan, the entering into of any cooperative agreement, and the extension, continuation, renewal, amendment, or modification of any Federal contract, grant, loan, or cooperative agreement.

(2) If any funds other than Federal appropriated funds have been paid or will be paid to any person for influencing or attempting to influence an officer or employee of any agency, a Member of Congress, an officer or employee of Congress, or an employee of a Member of Congress in connection with this Federal contract, grant, loan, or cooperative agreement, the undersigned shall complete and submit Standard Form-LLL, "Disclosure Form to Report Lobbying," in accordance with its instructions.

(3) The undersigned shall require that the language of this certification be included in the award documents for all sub-awards at all tiers (including subcontracts, subgrants, and contracts under grants, loans, and cooperative agreements) and that all sub-recipients shall certify and disclose accordingly.

This certification is a material representation of fact upon which reliance was placed when this transaction was made or entered into. Submission of this certification is a prerequisite for making or entering into this transaction imposed by section 1352, title 31, U.S. Code. Any person who fails to file the required certification shall be subject to a civil penalty of not less than $10,000 and not more than $100,000 for each such failure.

PROHIBITION OF SEGREGATED FACILITIES

(a) Contractor agrees that it does not and will not maintain or provide for its employees any segregated facilities at any of its establishments, and that it does not and will not permit its employees to perform their services at any location under its control where segregated facilities are maintained. Contractor agrees that a breach of this clause is a violation of the Equal Employment Opportunity clause in this contract.

(b) "Segregated facilities," as used in this clause, means any waiting rooms, work areas, rest rooms and wash rooms, restaurants and other eating areas, time clocks, locker rooms and other storage or dressing areas, parking lots, drinking fountains, recreation or entertainment areas, transportation, and housing

facilities provided for employees that are segregated by explicit directive or are in fact segregated on the basis of race, color, religion, sex, sexual orientation, gender identity, or national origin because of written or oral policies or employee custom. The term does not include separate or single-user rest rooms or necessary dressing or sleeping areas provided to assure privacy between the sexes.

(c) Contractor shall include this clause in every subcontract and purchase order that is subject to the Equal Employment Opportunity clause of this contract.

OCCUPATIONAL SAFETY AND HEALTH ACT OF 1970

All contracts and subcontracts that result from this solicitation incorporate by reference the requirements of 29 CFR Part 1910 with the same force and effect as if given in full text. The employer must provide a work environment that is free from recognized hazards that may cause death or serious physical harm to the employee. The employer retains full responsibility to monitor its compliance and their subcontractor's compliance with the applicable requirements of the Occupational Safety and Health Act of 1970 (29 CFR Part 1910). The employer must address any claims or disputes that pertain to a referenced requirement directly with the U.S. Department of Labor – Occupational Safety and Health Administration.

PROCUREMENT OF RECOVERED MATERIALS

Contractor and subcontractor agree to comply with Section 6002 of the Solid Waste Disposal Act, as amended by the Resource Conservation and Recovery Act, and the regulatory provisions of 40 CFR Part 247. In the performance of this contract and to the extent practicable, Contractor and subcontractors are to use products containing the highest percentage of recovered materials for items designated by the Environmental Protection Agency (EPA) under 40 CFR Part 247 whenever:

1) Contract requires procurement of $10,000 or more of a designated item during the fiscal year; or
2) Contractor has procured $10,000 or more of a designated item using Federal funding during the previous fiscal year.

List of EPA-designated items is available at www.epa.gov/smm/comprehensive-procurement-guidelines-construction-products.

Section 6002(c) establishes exceptions to the preference for recovery of EPA-designated products if Contractor can demonstrate the item is:

a) Not reasonably available within a timeframe providing for compliance with the contract performance schedule;
b) Fails to meet reasonable contract performance requirements; or
c) Is only available at an unreasonable price.

CERTIFICATION OF OFFEROR/BIDDER REGARDING TAX DELINQUENCY AND FELONY CONVICTIONS

Applicant must complete the following two certification statements. Applicant must indicate its current status as it relates to tax delinquency and felony conviction by inserting a checkmark (✓) in the space

following the applicable response. Applicant agrees that, if awarded a contract resulting from this solicitation, it will incorporate this provision for certification in all lower tier subcontracts.

Certifications

1) Applicant represents that it is (✓) is not (**X**) a corporation that has any unpaid Federal tax liability that has been assessed, for which all judicial and administrative remedies have been exhausted or have lapsed, and that is not being paid in a timely manner pursuant to an agreement with the authority responsible for collecting the tax liability.
2) Applicant represents that it is (✓) is not (**X**) a corporation that was convicted of a criminal violation under any Federal law within the preceding 24 months.

Note

If an applicant responds in the affirmative to either of the above representations, Applicant is ineligible to receive an award unless Sponsor has received notification from the agency suspension and debarment official (SDO) that the SDO has considered suspension or debarment and determined that further action is not required to protect the Government's interests. Applicant therefore must provide information to Owner about its tax liability or conviction to Owner, who will then notify FAA Airports District Office, which will then notify the agency's SDO to facilitate completion of the required considerations before award decisions are made.

Term Definitions

> **Felony conviction:** Felony conviction means a conviction within the preceding 24 months of a felony criminal violation under any Federal law and includes conviction of an offense defined in a section of the U.S. Code that specifically classifies the offense as a felony and conviction of an offense that is classified as a felony under 18 USC § 3559.
>
> **Tax Delinquency**: A tax delinquency is any unpaid Federal tax liability that has been assessed, for which all judicial and administrative remedies have been exhausted, or have lapsed, and that is not being paid in a timely manner pursuant to an agreement with the authority responsible for collecting the tax liability.

TERMINATION FOR CONVENIENCE (CONSTRUCTION & EQUIPMENT CONTRACTS)

Owner may terminate this contract in whole or in part at any time by providing written notice to Contractor. Such action may be without cause and without prejudice to any other right or remedy of Owner. Upon receipt of a written notice of termination, except as explicitly directed by Owner, Contractor shall immediately proceed with the following obligations regardless of any delay in determining or adjusting amounts due under this clause:

1. Contractor must immediately discontinue work as specified in the written notice.
2. Terminate all subcontracts to the extent they relate to the work terminated under the notice.
3. Discontinue orders for materials and services except as directed by the written notice.
4. Deliver to Owner all fabricated and partially fabricated parts, completed and partially completed work, supplies, equipment and materials acquired prior to termination of the work, and as directed in the written notice.
5. Complete performance of the work not terminated by the notice.

6. Take action as directed by Owner to protect and preserve property and work related to this contract that Owner will take possession.

Owner agrees to pay Contractor for:

1. Completed and acceptable work executed in accordance with the contract documents prior to the effective date of termination;
2. Documented expenses sustained prior to the effective date of termination in performing work and furnishing labor, materials, or equipment as required by the contract documents in connection with uncompleted work;
3. Reasonable and substantiated claims, costs, and damages incurred in settlement of terminated contracts with Subcontractors and Suppliers; and
4. Reasonable and substantiated expenses to Contractor directly attributable to Owner's termination action.

Owner will not pay Contractor for loss of anticipated profits or revenue or other economic loss arising out of or resulting from Owner's termination action.

The rights and remedies this clause provides are in addition to any other rights and remedies provided by law or under this contract.

TERMINATION FOR CAUSE (CONSTRUCTION)

Section 80-09 of FAA Advisory Circular 150/5370-10 establishes standard language for conditions, rights, and remedies associated with Owner termination of this contract for cause due to default of Contractor.

TRADE RESTRICTION CERTIFICATION

By submission of an offer, Offeror certifies that with respect to this solicitation and any resultant contract, Offeror –

1) is not owned or controlled by one or more citizens of a foreign country included in the list of countries that discriminate against U.S. firms as published by the Office of the United States Trade Representative (USTR);

2) has not knowingly entered into any contract or subcontract for this project with a person that is a citizen or national of a foreign country included on the list of countries that discriminate against U.S. firms as published by the USTR; and

3) has not entered into any subcontract for any product to be used on the Federal project that is produced in a foreign country included on the list of countries that discriminate against U.S. firms published by the USTR.

This certification concerns a matter within the jurisdiction of an agency of the United States of America and the making of a false, fictitious, or fraudulent certification may render the maker subject to prosecution under Title 18 USC § 1001.

Offeror/Contractor must provide immediate written notice to Owner if Offeror/Contractor learns that its certification or that of a subcontractor was erroneous when submitted or has become erroneous by reason

of changed circumstances. Contractor must require subcontractors provide immediate written notice to Contractor if at any time it learns that its certification was erroneous by reason of changed circumstances.

Unless the restrictions of this clause are waived by the Secretary of Transportation in accordance with 49 CFR § 30.17, no contract shall be awarded to an Offeror or subcontractor:

1) who is owned or controlled by one or more citizens or nationals of a foreign country included on the list of countries that discriminate against U.S. firms published by the USTR; or
2) whose subcontractors are owned or controlled by one or more citizens or nationals of a foreign country on such USTR list; or
3) who incorporates in the public works project any product of a foreign country on such USTR list.

Nothing contained in the foregoing shall be construed to require establishment of a system of records in order to render, in good faith, the certification required by this provision. The knowledge and information of a contractor is not required to exceed that which is normally possessed by a prudent person in the ordinary course of business dealings.

Offeror agrees that, if awarded a contract resulting from this solicitation, it will incorporate this provision for certification without modification in all lower tier subcontracts. Contractor may rely on the certification of a prospective subcontractor that it is not a firm from a foreign country included on the list of countries that discriminate against U.S. firms as published by USTR, unless Offeror has knowledge that the certification is erroneous.

This certification is a material representation of fact upon which reliance was placed when making an award. If it is later determined that Contractor or subcontractor knowingly rendered an erroneous certification, FAA (FAA) may direct through Owner cancellation of the contract or subcontract for default at no cost to Owner or FAA.

VETERAN'S PREFERENCE

In the employment of labor (excluding executive, administrative, and supervisory positions), Contractor and all sub-tier contractors must give preference to covered veterans as defined within Title 49 United States Code Section 47112. Covered veterans include Vietnam-era veterans, Persian Gulf veterans, Afghanistan-Iraq war veterans, disabled veterans, and small business concerns (as defined by 15 USC § 632) owned and controlled by disabled veterans. This preference only applies when there are covered veterans readily available and qualified to perform the work to which the employment relates.

CERTIFICATION REGARDING DOMESTIC PREFERENCES FOR PROCUREMENTS

Bidder or Offeror certifies by signing and submitting this bid or proposal that, to the greatest extent practicable, Bidder or Offeror has provided a preference for the purchase, acquisition, or use of goods, products, or materials produced in the United States (including, but not limited to, iron, aluminum, steel, cement, and other manufactured products) in compliance with 2 CFR § 200.322.

Part 1 – General Contract Provisions

Section 10 Definition of Terms

When the following terms are used in these specifications, in the contract, or in any documents or other instruments pertaining to construction where these specifications govern, the intent and meaning shall be defined as follows:

Paragraph Number	Term	Definition
10-01	**AASHTO**	American Association of State Highway and Transportation Officials.
10-02	**Access Road**	Right-of-way, roadway, and all improvements constructed thereon connecting the airport to a public roadway.
10-03	**Advertisement**	A public announcement, as required by local law, inviting bids for work to be performed and materials to be furnished.
10-04	**Airport**	Airport means an area of land or water which is used or intended to be used for the landing and takeoff of aircraft; an appurtenant area used or intended to be used for airport buildings or other airport facilities or rights of way; airport buildings and facilities located in any of these areas, and a heliport.
10-05	**Airport Improvement Program (AIP)**	A grant-in-aid program, administered by the Federal Aviation Administration (FAA).
10-06	**Air Operations Area (AOA)**	Any area of the airport used or intended to be used for the landing, takeoff, or surface maneuvering of aircraft. An air operation area shall include such paved or unpaved areas that are used or intended to be used for the unobstructed movement of aircraft in addition to its associated runway, taxiway, or apron.
10-07	**Apron**	Area where aircraft are parked, unloaded or loaded, fueled and/or serviced.
10-08	**ASTM International (ASTM)**	Formerly known as the American Society for Testing and Materials (ASTM).
10-09	**Award**	Owner's notice to the successful bidder of the acceptance of the submitted bid.
10-10	**Bidder**	Any individual, partnership, firm, or corporation, acting directly or through a duly authorized representative, who submits a proposal for the work contemplated.
10-11	**Building Area**	An area on the airport to be used, considered, or intended to be used for airport buildings or other airport facilities or rights-of-way together with all airport buildings and facilities located thereon.
10-12	**Calendar Day**	Every day shown on the calendar.
10-13	**Certificate of Analysis (COA)**	The COA is the manufacturer's Certificate of Compliance (COC) including all applicable test results required by the specifications.
10-14	**Certificate of Compliance (COC)**	The manufacturer's certification stating that materials or assemblies furnished fully comply with the requirements of the contract. The certificate shall be signed by the manufacturer's authorized representative.
10-15	**Change Order**	A written order to Contractor covering changes in the plans, specifications, or proposal quantities and establishing the basis of

Paragraph Number	Term	Definition
		payment and contract time adjustment, if any, for work within the scope of the contract and necessary to complete the project.
10-16	**Contract**	A written agreement between Owner and Contractor that establishes the obligations of the parties including but not limited to performance of work, furnishing of labor, equipment and materials and the basis of payment. The awarded contract includes but may not be limited to: Advertisement, Contract form, Proposal, Performance bond, payment bond, General provisions, certifications and representations, Technical Specifications, Plans, Supplemental Provisions, standards incorporated by reference and issued addenda.
10-17	**Contract Item (Pay Item)**	A specific unit of work for which a price is provided in the contract.
10-18	**Contract Time**	The number of calendar days or working days, stated in the proposal, allowed for completion of the contract, including authorized time extensions. If a calendar date of completion is stated in the proposal, in lieu of a number of calendar or working days, the contract shall be completed by that date.
10-19	**Contractor**	The individual, partnership, firm, or corporation primarily liable for the acceptable performance of the work contracted and for the payment of all legal debts pertaining to the work who acts directly or through lawful agents or employees to complete the contract work.
10-20	**Contractors Quality Control (QC) Facilities**	Contractor's QC facilities in accordance with Contractor Quality Control Program (CQCP).
10-21	**Contractor Quality Control Program (CQCP)**	Details the methods and procedures that will be taken to assure that all materials and completed construction required by the contract conform to contract plans, technical specifications and other requirements, whether manufactured by Contractor, or procured from subcontractors or vendors.
10-22	**Control Strip**	A demonstration by Contractor that the materials, equipment, and construction processes results in a product meeting the requirements of the specification.
10-23	**Construction Safety and Phasing Plan (CSPP)**	The overall plan for safety and phasing of a construction project developed by the airport operator, or developed by the airport operator's consultant and approved by the airport operator. It is included in the invitation for bids and becomes part of the project specifications.
10-24	**Drainage System**	The system of pipes, ditches, and structures by which surface or subsurface waters are collected and conducted from the airport area.
10-25	**Engineer**	The individual, partnership, firm, or corporation duly authorized by Owner to be responsible for engineering, inspection, and/or observation of the contract work and acting directly or through an authorized representative.
10-26	**Equipment**	All machinery, together with the necessary supplies for upkeep and maintenance; and all tools and apparatus necessary for the proper construction and acceptable completion of the work.
10-27	**Extra Work**	An item of work not provided for in the awarded contract as previously modified by change order or supplemental agreement, but which is found by Owner's Engineer or Resident Project

Paragraph Number	Term	Definition
		Representative (RPR) to be necessary to complete the work within the intended scope of the contract as previously modified.
10-28	**FAA**	The Federal Aviation Administration. When used to designate a person, FAA shall mean the Administrator or their duly authorized representative.
10-29	**Federal Specifications**	The federal specifications and standards, commercial item descriptions, and supplements, amendments, and indices prepared and issued by the General Services Administration.
10-30	**Force Account**	**a.** Contract Force Account - A method of payment that addresses extra work performed by Contractor on a time and material basis. **b.** Owner Force Account - Work performed for the project by Owner's employees.
10-31	**Intention of Terms**	Whenever, in these specifications or on the plans, the words "directed," "required," "permitted," "ordered," "designated," "prescribed," or words of like import are used, it shall be understood that the direction, requirement, permission, order, designation, or prescription of Engineer and/or Resident Project Representative (RPR) is intended; and similarly, the words "approved," "acceptable," "satisfactory," or words of like import, shall mean approved by, or acceptable to, or satisfactory to Engineer and/or RPR, subject in each case to the final determination of Owner. Any reference to a specific requirement of a numbered paragraph of the contract specifications or a cited standard shall be interpreted to include all general requirements of the entire section, specification item, or cited standard that may be pertinent to such specific reference.
10-32	**Lighting**	A system of fixtures providing or controlling the light sources used on or near the airport or within the airport buildings. The field lighting includes all luminous signals, markers, floodlights, and illuminating devices used on or near the airport or to aid in the operation of aircraft landing at, taking off from, or taxiing on the airport surface.
10-33	**Major and Minor Contract Items**	A major contract item shall be any item that is listed in the proposal, the total cost of which is equal to or greater than 20% of the total amount of the award contract. All other items shall be considered minor contract items.
10-34	**Materials**	Any substance specified for use in the construction of the contract work.
10-35	**Modification of Standards (MOS)**	Any deviation from standard specifications applicable to material and construction methods in accordance with FAA Order 5300.1.
10-36	**Notice to Proceed (NTP)**	A written notice to Contractor to begin the actual contract work on a previously agreed to date. If applicable, the Notice to Proceed shall state the date on which the contract time begins.
10-37	**Owner**	The term "Owner" shall mean the party of the first part or the contracting agency signatory to the contract. Where the term "Owner" is capitalized in this document, it shall mean airport Sponsor only. Owner for this project is **City of Midland**.
10-38	Passenger Facility Charge (PFC)	Per 14 Code of Federal Regulations (CFR) Part 158 and 49 United States Code (USC) § 40117, a PFC is a charge imposed by a public agency on passengers enplaned at a commercial service airport it controls.

Paragraph Number	Term	Definition
10-39	**Pavement Structure**	The combined surface course, base course(s), and subbase course(s), if any, considered as a single unit.
10-40	**Payment bond**	The approved form of security furnished by Contractor and their own surety as a guaranty that Contractor will pay in full all bills and accounts for materials and labor used in the construction of the work.
10-41	**Performance bond**	The approved form of security furnished by Contractor and their own surety as a guaranty that Contractor will complete the work in accordance with the terms of the contract.
10-42	**Plans**	The official drawings or exact reproductions which show the location, character, dimensions and details of the airport and the work to be done and which are to be considered as a part of the contract, supplementary to the specifications. Plans may also be referred to as 'contract drawings.'
10-43	**Project**	The agreed scope of work for accomplishing specific airport development with respect to a particular airport.
10-44	**Proposal**	The written offer of the bidder (when submitted on the approved proposal form) to perform the contemplated work and furnish the necessary materials in accordance with the provisions of the plans and specifications.
10-45	**Proposal guaranty**	The security furnished with a proposal to guarantee that the bidder will enter into a contract if their own proposal is accepted by Owner.
10-46	**Quality Assurance (QA)**	Owner's responsibility to assure that construction work completed complies with specifications for payment.
10-47	**Quality Control (QC)**	Contractor's responsibility to control material(s) and construction processes to complete construction in accordance with project specifications.
10-48	**Quality Assurance (QA) Inspector**	An authorized representative of Engineer and/or Resident Project Representative (RPR) assigned to make all necessary inspections, observations, tests, and/or observation of tests of the work performed or being performed, or of the materials furnished or being furnished by Contractor.
10-49	**Quality Assurance (QA) Laboratory**	The official quality assurance testing laboratories of Owner or such other laboratories as may be designated by Engineer or RPR. May also be referred to as Engineer's, Owner's, or QA Laboratory.
10-50	**Resident Project Representative (RPR)**	The individual, partnership, firm, or corporation duly authorized by Owner to be responsible for all necessary inspections, observations, tests, and/or observations of tests of the contract work performed or being performed, or of the materials furnished or being furnished by Contractor, and acting directly or through an authorized representative.
10-51	**Runway**	The area on the airport prepared for the landing and takeoff of aircraft.
10-52	**Runway Safety Area (RSA)**	A defined surface surrounding the runway prepared or suitable for reducing the risk of damage to aircraft. See the construction safety and phasing plan (CSPP) for limits of the RSA.
10-53	**Safety Plan Compliance Document (SPCD)**	Details how Contractor will comply with the CSPP.
10-54	**Specifications**	A part of the contract containing the written directions and requirements for completing the contract work. Standards for specifying materials or testing which are cited in the contract

Paragraph Number	Term	Definition
		specifications by reference shall have the same force and effect as if included in the contract physically.
10-55	**Sponsor**	A Sponsor is defined in 49 USC § 47102(24) as a public agency that submits to the FAA for an AIP grant; or a private Owner of a public-use airport that submits to the FAA an application for an AIP grant for the airport.
10-56	**Structures**	Airport facilities such as bridges; culverts; catch basins, inlets, retaining walls, cribbing; storm and sanitary sewer lines; water lines; underdrains; electrical ducts, manholes, handholes, lighting fixtures and bases; transformers; navigational aids; buildings; vaults; and, other manmade features of the airport that may be encountered in the work and not otherwise classified herein.
10-57	**Subgrade**	The soil that forms the pavement foundation.
10-58	**Superintendent**	Contractor's executive representative who is present on the work during progress, authorized to receive and fulfill instructions from RPR, and who shall supervise and direct the construction.
10-59	**Supplemental Agreement**	A written agreement between Contractor and Owner that establishes the basis of payment and contract time adjustment, if any, for the work affected by the supplemental agreement. A supplemental agreement is required if: (1) in scope work would increase or decrease the total amount of the awarded contract by more than 25%: (2) in scope work would increase or decrease the total of any major contract item by more than 25%; (3) work that is not within the scope of the originally awarded contract; or (4) adding or deleting of a major contract item.
10-60	**Surety**	The corporation, partnership, or individual, other than Contractor, executing payment or performance bonds that are furnished to Owner by Contractor.
10-61	**Taxilane**	A taxiway designed for low speed movement of aircraft between aircraft parking areas and terminal areas.
10-62	**Taxiway**	The portion of the air operations area of an airport that has been designated by competent airport authority for movement of aircraft to and from the airport's runways, aircraft parking areas, and terminal areas.
10-63	**Taxiway/Taxilane Safety Area (TSA)**	A defined surface alongside the taxiway prepared or suitable for reducing the risk of damage to an aircraft. See the construction safety and phasing plan (CSPP) for limits of the TSA.
10-64	**Work**	The furnishing of all labor, materials, tools, equipment, and incidentals necessary or convenient to Contractor's performance of all duties and obligations imposed by the contract, plans, and specifications.
10-65	**Working day**	A working day shall be any day other than a legal holiday, Saturday, or Sunday on which the normal working forces of Contractor may proceed with regular work for at least six (6) hours toward completion of the contract. When work is suspended for causes beyond Contractor's control, it will not be counted as a working day. Saturdays, Sundays and holidays on which Contractor's forces engage in regular work will be considered as working days.
10-66	**Owner Defined terms**	None

END OF SECTION 10

Section 20 Proposal Requirements and Conditions

20-01 Advertisement (Notice to Bidders). See Section A – Advertisement for Bids (Notice to Bidders).

20-02 Qualification of bidders. Each bidder shall submit evidence of competency and evidence of financial responsibility to perform the work to Owner at the time of bid opening.

Evidence of competency, unless otherwise specified, shall consist of statements covering the bidder's past experience on similar work, and a list of equipment and a list of key personnel that would be available for the work.

Each bidder shall furnish Owner satisfactory evidence of their financial responsibility. Evidence of financial responsibility, unless otherwise specified, shall consist of a confidential statement or report of the bidder's financial resources and liabilities as of the last calendar year or the bidder's last fiscal year. Such statements or reports shall be certified by a public accountant. At the time of submitting such financial statements or reports, the bidder shall further certify whether their financial responsibility is approximately the same as stated or reported by the public accountant. If the bidder's financial responsibility has changed, the bidder shall qualify the public accountant's statement or report to reflect the bidder's true financial condition at the time such qualified statement or report is submitted to Owner.

Unless otherwise specified, a bidder may submit evidence that they are prequalified with the State Highway Division and are on the current "bidder's list" of the state in which the proposed work is located. Evidence of State Highway Division prequalification may be submitted as evidence of financial responsibility in lieu of the certified statements or reports specified above.

20-03 Contents of proposal forms. Owner's proposal forms state the location and description of the proposed construction; the place, date, and time of opening of the proposals; and the estimated quantities of the various items of work to be performed and materials to be furnished for which unit bid prices are asked. The proposal form states the time in which the work must be completed, and the amount of the proposal guaranty that must accompany the proposal. Owner will accept only those Proposals properly executed on physical forms or electronic forms provided by Owner. Bidder actions that may cause Owner to deem a proposal irregular are given in paragraph 20-09 *Irregular proposals*.

Mobilization is limited to 10 percent of the total project cost.

A prebid conference is required on this project to discuss as a minimum, the following items: material requirements; submittals; Quality Control/Quality Assurance requirements; the construction safety and phasing plan including airport access and staging areas; and unique airfield paving construction requirements. Meeting time, date, and place described in Section A – Advertisement for Bids (Notice to Bidders).

20-04 Issuance of proposal forms. Owner reserves the right to refuse to issue a proposal form to a prospective bidder if the bidder is in default for any of the following reasons:

a. Failure to comply with any prequalification regulations of Owner, if such regulations are cited, or otherwise included, in the proposal as a requirement for bidding.

b. Failure to pay, or satisfactorily settle, all bills due for labor and materials on former contracts in force with Owner at the time Owner issues the proposal to a prospective bidder.

c. Documented record of Contractor default under previous contracts with Owner.

d. Documented record of unsatisfactory work on previous contracts with Owner.

20-05 Interpretation of estimated proposal quantities. An estimate of quantities of work to be done and materials to be furnished under these specifications is given in the proposal. It is the result of careful calculations and is believed to be correct. It is given only as a basis for comparison of proposals and the award of the contract. Owner does not expressly, or by implication, agree that the actual quantities involved will correspond exactly therewith; nor shall the bidder plead misunderstanding or deception because of such estimates of quantities, or of the character, location, or other conditions pertaining to the work. Payment to Contractor will be made only for the actual quantities of work performed or materials furnished in accordance with the plans and specifications. It is understood that the quantities may be increased or decreased as provided in the Section 40, paragraph 40-02, Alteration of Work and Quantities, without in any way invalidating the unit bid prices.

20-06 Examination of plans, specifications, and site. The bidder is expected to carefully examine the site of the proposed work, the proposal, plans, specifications, and contract forms. Bidders shall satisfy themselves to the character, quality, and quantities of work to be performed, materials to be furnished, and to the requirements of the proposed contract. The submission of a proposal shall be prima facie evidence that the bidder has made such examination and is satisfied to the conditions to be encountered in performing the work and the requirements of the proposed contract, plans, and specifications.

Boring logs and other records of subsurface investigations and tests are available for inspection of bidders. It is understood and agreed that such subsurface information, whether included in the plans, specifications, or otherwise made available to the bidder, was obtained and is intended for Owner's design and estimating purposes only. Such information has been made available for the convenience of all bidders. It is further understood and agreed that each bidder is solely responsible for all assumptions, deductions, or conclusions which the bidder may make or obtain from their own examination of the boring logs and other records of subsurface investigations and tests that are furnished by Owner.

20-07 Preparation of proposal. The bidder shall submit their proposal on the forms furnished by Owner. All blank spaces in the proposal forms, unless explicitly stated otherwise, must be correctly filled in where indicated for each and every item for which a quantity is given. The bidder shall state the price (written in ink or typed) both in words and numerals which they propose for each pay item furnished in the proposal. In case of conflict between words and numerals, the words, unless obviously incorrect, shall govern.

The bidder shall correctly sign the proposal in ink. If the proposal is made by an individual, their name and post office address must be shown. If made by a partnership, the name and post office address of each member of the partnership must be shown. If made by a corporation, the person signing the proposal shall give the name of the state where the corporation was chartered and the name, titles, and business address of the president, secretary, and the treasurer. Anyone signing a proposal as an agent shall file evidence of their authority to do so and that the signature is binding upon the firm or corporation.

20-08 Responsive and responsible bidder. A responsive bid conforms to all significant terms and conditions contained in Owner's invitation for bid. It is Owner's responsibility to decide if the exceptions taken by a bidder to the solicitation are material or not and the extent of deviation it is willing to accept.

A responsible bidder has the ability to perform successfully under the terms and conditions of a proposed procurement, as defined in 2 CFR § 200.318(h). This includes such matters as Contractor integrity, compliance with public policy, record of past performance, and financial and technical resources.

20-09 Irregular proposals. Proposals shall be considered irregular for the following reasons:

a. If the proposal is on a form other than that furnished by Owner, or if Owner's form is altered, or if any part of the proposal form is detached.

b. If there are unauthorized additions, conditional or alternate pay items, or irregularities of any kind that make the proposal incomplete, indefinite, or otherwise ambiguous.

c. If the proposal does not contain a unit price for each pay item listed in the proposal, except in the case of authorized alternate pay items, for which the bidder is not required to furnish a unit price.

d. If the proposal contains unit prices that are obviously unbalanced.

e. If the proposal is not accompanied by the proposal guaranty specified by Owner.

f. If the applicable Disadvantaged Business Enterprise information is incomplete.

Owner reserves the right to reject any irregular proposal and the right to waive technicalities if such waiver is in the best interest of Owner and conforms to local laws and ordinances pertaining to the letting of construction contracts.

20-10 Bid guarantee. Each separate proposal shall be accompanied by a bid bond, certified check, or other specified acceptable collateral, in the amount specified in the proposal form. Such bond, check, or collateral, shall be made payable to Owner.

20-11 Delivery of proposal. Each proposal submitted shall be placed in a sealed envelope plainly marked with the project number, location of airport, and name and business address of the bidder on the outside. When sent by mail, preferably registered, the sealed proposal, marked as indicated above, should be enclosed in an additional envelope. No proposal will be considered unless received at the place specified in the advertisement or as modified by Addendum before the time specified for opening all bids. Proposals received after the bid opening time shall be returned to the bidder unopened.

20-12 Withdrawal or revision of proposals. A bidder may withdraw or revise (by withdrawal of one proposal and submission of another) a proposal provided that the bidder's request for withdrawal is received by Owner in writing or by email before the time specified for opening bids. Revised proposals must be received at the place specified in the advertisement before the time specified for opening all bids.

20-13 Public opening of proposals. Proposals shall be opened, and read, publicly at the time and place specified in the advertisement. Bidders, their authorized agents, and other interested persons are invited to attend. Proposals that have been withdrawn (by written or telegraphic request) or received after the time specified for opening bids shall be returned to the bidder unopened.

20-14 Disqualification of bidders. A bidder shall be considered disqualified for any of the following reasons:

a. Submitting more than one proposal from the same partnership, firm, or corporation under the same or different name.

b. Evidence of collusion among bidders. Bidders participating in such collusion shall be disqualified as bidders for any future work of Owner until any such participating bidder has been reinstated by Owner as a qualified bidder.

c. If the bidder is considered to be in "default" for any reason specified in paragraph 20-04, *Issuance of Proposal Forms,* of this section.

20-15 Discrepancies and Omissions. A Bidder who discovers discrepancies or omissions with the project bid documents shall immediately notify Owner's Engineer of the matter. A bidder that has doubt as to the true meaning of a project requirement may submit to Owner's Engineer a written request for interpretation no later than 14 days prior to bid opening.

Any interpretation of the project bid documents by Owner's Engineer will be by written addendum issued by Owner. Owner will not consider any instructions, clarifications, or interpretations of the bidding documents in any manner other than written addendum.

END OF SECTION 20

Section 30 Award and Execution of Contract

30-01 Consideration of proposals. After the proposals are publicly opened and read, they will be compared on the basis of the summation of the products obtained by multiplying the estimated quantities shown in the proposal by the unit bid prices. If a bidder's proposal contains a discrepancy between unit bid prices written in words and unit bid prices written in numbers, the unit bid price written in words shall govern.

Until the award of a contract is made, Owner reserves the right to reject a bidder's proposal for any of the following reasons:

a. If the proposal is irregular as specified in Section 20, paragraph 20-09, *Irregular Proposals*.

b. If the bidder is disqualified for any of the reasons specified Section 20, paragraph 20-14, *Disqualification of Bidders*.

In addition, until the award of a contract is made, Owner reserves the right to reject any or all proposals, waive technicalities, if such waiver is in the best interest of Owner and is in conformance with applicable state and local laws or regulations pertaining to the letting of construction contracts; advertise for new proposals; or proceed with the work otherwise. All such actions shall promote Owner's best interests.

30-02 Award of contract. The award of a contract, if it is to be awarded, shall be made within 30 calendar days of the date specified for publicly opening proposals, unless otherwise specified herein.

If Owner elects to proceed with an award of contract, Owner will make award to the responsible bidder whose bid, conforming with all the material terms and conditions of the bid documents, is the lowest in price.

30-03 Cancellation of award. Owner reserves the right to cancel the award without liability to the bidder, except return of proposal guaranty, at any time before a contract has been fully executed by all parties and is approved by Owner in accordance with paragraph 30-07 *Approval of Contract*.

30-04 Return of proposal guaranty. All proposal guaranties, except those of the two lowest bidders, will be returned immediately after Owner has made a comparison of bids as specified in the paragraph 30-01, *Consideration of Proposals.* Proposal guaranties of the two lowest bidders will be retained by Owner until such time as an award is made, at which time, the unsuccessful bidder's proposal guaranty will be returned. The successful bidder's proposal guaranty will be returned as soon as Owner receives the contract bonds as specified in paragraph 30-05, *Requirements of Contract Bonds.*

30-05 Requirements of contract bonds. At the time of the execution of the contract, the successful bidder shall furnish Owner a surety bond or bonds that have been fully executed by the bidder and the surety guaranteeing the performance of the work and the payment of all legal debts that may be incurred by reason of Contractor's performance of the work. The surety and the form of the bond or bonds shall be acceptable to Owner. Unless otherwise specified in this subsection, the surety bond or bonds shall be in a sum equal to the full amount of the contract.

30-06 Execution of contract. The successful bidder shall sign (execute) the necessary agreements for entering into the contract and return the signed contract to Owner, along with the fully executed surety bond or bonds specified in paragraph 30-05, *Requirements of Contract Bonds,* of this section, within 15 calendar days from the date mailed or otherwise delivered to the successful bidder.

30-07 Approval of contract. Upon receipt of the contract and contract bond or bonds that have been executed by the successful bidder, Owner shall complete the execution of the contract in accordance with

local laws or ordinances, and return the fully executed contract to Contractor. Delivery of the fully executed contract to Contractor shall constitute Owner's approval to be bound by the successful bidder's proposal and the terms of the contract.

30-08 Failure to execute contract. Failure of the successful bidder to execute the contract and furnish an acceptable surety bond or bonds within the period specified in paragraph 30-06, *Execution of Contract,* of this section shall be just cause for cancellation of the award and forfeiture of the proposal guaranty, not as a penalty, but as liquidated damages to Owner.

END OF SECTION 30

Section 40 Scope of Work

40-01 Intent of contract. The intent of the contract is to provide for construction and completion, in every detail, of the work described. It is further intended that Contractor shall furnish all labor, materials, equipment, tools, transportation, and supplies required to complete the work in accordance with the plans, specifications, and terms of the contract.

40-02 Alteration of work and quantities. Owner reserves the right to make such changes in quantities and work as may be necessary or desirable to complete, in a satisfactory manner, the original intended work. Unless otherwise specified in the Contract, Owner's Engineer or RPR shall be and is hereby authorized to make, in writing, such in-scope alterations in the work and variation of quantities as may be necessary to complete the work, provided such action does not represent a significant change in the character of the work.

For purpose of this section, a significant change in character of work means: any change that is outside the current contract scope of work; any change (increase or decrease) in the total contract cost by more than 25%; or any change in the total cost of a major contract item by more than 25%.

Work alterations and quantity variances that do not meet the definition of significant change in character of work shall not invalidate the contract nor release the surety. Contractor agrees to accept payment for such work alterations and quantity variances in accordance with Section 90, paragraph 90-03, *Compensation for Altered Quantities*.

Should the value of altered work or quantity variance meet the criteria for significant change in character of work, such altered work and quantity variance shall be covered by a supplemental agreement. Supplemental agreements shall also require consent of Contractor's surety and separate performance and payment bonds. If Owner and Contractor are unable to agree on a unit adjustment for any contract item that requires a supplemental agreement, Owner reserves the right to terminate the contract with respect to the item and make other arrangements for its completion.

40-03 Omitted items. Owner, Owner's Engineer or RPR may provide written notice to Contractor to omit from the work any contract item that does not meet the definition of major contract item. Major contract items may be omitted by a supplemental agreement. Such omission of contract items shall not invalidate any other contract provision or requirement.

Should a contract item be omitted or otherwise ordered to be non-performed, Contractor shall be paid for all work performed toward completion of such item prior to the date of the order to omit such item. Payment for work performed shall be in accordance with Section 90, paragraph 90-04, *Payment for Omitted Items*.

40-04 Extra work. Should acceptable completion of the contract require Contractor to perform an item of work not provided for in the awarded contract as previously modified by change order or supplemental agreement, Owner may issue a Change Order to cover the necessary extra work. Change orders for extra work shall contain agreed unit prices for performing the change order work in accordance with the requirements specified in the order, and shall contain any adjustment to the contract time that, in RPR's opinion, is necessary for completion of the extra work.

When determined by RPR to be in Owner's best interest, RPR may order Contractor to proceed with extra work as provided in Section 90, paragraph 90-05, *Payment for Extra Work*. Extra work that is necessary for acceptable completion of the project, but is not within the general scope of the work covered by the

original contract shall be covered by a supplemental agreement as defined in Section 10, paragraph 10-59, *Supplemental Agreement*.

If extra work is essential to maintaining the project critical path, RPR may order Contractor to commence the extra work under a Time and Material contract method. Once sufficient detail is available to establish the level of effort necessary for the extra work, Owner shall initiate a change order or supplemental agreement to cover the extra work.

Any claim for payment of extra work that is not covered by written agreement (change order or supplemental agreement) shall be rejected by Owner.

40-05 Maintenance of traffic. It is the explicit intention of the contract that the safety of aircraft, as well as Contractor's equipment and personnel, is the most important consideration. Contractor shall maintain traffic in the manner detailed in the Construction Safety and Phasing Plan (CSPP).

a. It is understood and agreed that Contractor shall provide for the free and unobstructed movement of aircraft in the air operations areas (AOAs) of the airport with respect to their own operations and the operations of all subcontractors as specified in Section 80, paragraph 80-04, *Limitation of Operations*. It is further understood and agreed that Contractor shall provide for the uninterrupted operation of visual and electronic signals (including power supplies thereto) used in the guidance of aircraft while operating to, from, and upon the airport as specified in Section 70, paragraph 70-15, *Contractor's Responsibility for Utility Service and Facilities of Others*.

b. With respect to their own operations and the operations of all subcontractors, Contractor shall provide marking, lighting, and other acceptable means of identifying personnel, equipment, vehicles, storage areas, and any work area or condition that may be hazardous to the operation of aircraft, fire-rescue equipment, or maintenance vehicles at the airport in accordance with the construction safety and phasing plan (CSPP) and the safety plan compliance document (SPCD).

c. When the contract requires the maintenance of an existing road, street, or highway during Contractor's performance of work that is otherwise provided for in the contract, plans, and specifications, Contractor shall keep the road, street, or highway open to all traffic and shall provide maintenance as may be required to accommodate traffic. Contractor, at their expense, shall be responsible for the repair to equal or better than preconstruction conditions of any damage caused by Contractor's equipment and personnel. Contractor shall furnish, erect, and maintain barricades, warning signs, flag person, and other traffic control devices in reasonable conformity with the Manual on Uniform Traffic Control Devices (MUTCD) (http://mutcd.fhwa.dot.gov/), unless otherwise specified. Contractor shall also construct and maintain in a safe condition any temporary connections necessary for ingress to and egress from abutting property or intersecting roads, streets, or highways. Unless otherwise specified herein, Contractor will not be required to furnish snow removal for such existing road, street, or highway**.**

40-06 Removal of existing structures. All existing structures encountered within the established lines, grades, or grading sections shall be removed by Contractor, unless such existing structures are otherwise specified to be relocated, adjusted up or down, salvaged, abandoned in place, reused in the work or to remain in place. The cost of removing such existing structures shall not be measured or paid for directly, but shall be included in the various contract items.

Should Contractor encounter an existing structure (above or below ground) in the work for which the disposition is not indicated on the plans, the Resident Project Representative (RPR) shall be notified prior to disturbing such structure. The disposition of existing structures so encountered shall be immediately determined by RPR in accordance with the provisions of the contract.

Except as provided in Section 40, paragraph 40-07, *Rights in and Use of Materials Found in the Work*, it is intended that all existing materials or structures that may be encountered (within the lines, grades, or grading

sections established for completion of the work) shall be used in the work as otherwise provided for in the contract and shall remain the property of Owner when so used in the work.

40-07 Rights in and use of materials found in the work. Should Contractor encounter any material such as (but not restricted to) sand, stone, gravel, slag, or concrete slabs within the established lines, grades, or grading sections, the use of which is intended by the terms of the contract to be embankment, Contractor may at their own option either:

a. Use such material in another contract item, providing such use is approved by RPR and is in conformance with the contract specifications applicable to such use; or,

b. Remove such material from the site, upon written approval of RPR; or

c. Use such material for Contractor's own temporary construction on site; or,

d. Use such material as intended by the terms of the contract.

Should Contractor wish to exercise option a., b., or c., Contractor shall request RPR's approval in advance of such use.

Should RPR approve Contractor's request to exercise option a., b., or c., Contractor shall be paid for the excavation or removal of such material at the applicable contract price. Contractor shall replace, at their expense, such removed or excavated material with an agreed equal volume of material that is acceptable for use in constructing embankment, backfills, or otherwise to the extent that such replacement material is needed to complete the contract work. Contractor shall not be charged for use of such material used in the work or removed from the site.

Should RPR approve Contractor's exercise of option a., Contractor shall be paid, at the applicable contract price, for furnishing and installing such material in accordance with requirements of the contract item in which the material is used.

It is understood and agreed that Contractor shall make no claim for delays by reason of their own exercise of option a., b., or c.

Contractor shall not excavate, remove, or otherwise disturb any material, structure, or part of a structure which is located outside the lines, grades, or grading sections established for the work, except where such excavation or removal is provided for in the contract, plans, or specifications.

40-08 Final cleanup. Upon completion of the work and before acceptance and final payment will be made, Contractor shall remove from the site all machinery, equipment, surplus and discarded materials, rubbish, temporary structures, and stumps or portions of trees. Contractor shall cut all brush and woods within the limits indicated and shall leave the site in a neat and presentable condition. Material cleared from the site and deposited on adjacent property will not be considered as having been disposed of satisfactorily, unless Contractor has obtained the written permission of the property Owner.

END OF SECTION 40

Section 50 Control of Work

50-01 Authority of the Resident Project Representative (RPR). RPR has final authority regarding the interpretation of project specification requirements. RPR shall determine acceptability of the quality of materials furnished, method of performance of work performed, and the manner and rate of performance of the work. RPR does not have the authority to accept work that does not conform to specification requirements.

50-02 Conformity with plans and specifications. All work and all materials furnished shall be in reasonably close conformity with the lines, grades, grading sections, cross-sections, dimensions, material requirements, and testing requirements that are specified (including specified tolerances) in the contract, plans, or specifications.

If RPR finds the materials furnished, work performed, or the finished product not within reasonably close conformity with the plans and specifications, but that the portion of the work affected will, in their opinion, result in a finished product having a level of safety, economy, durability, and workmanship acceptable to Owner, RPR will advise Owner of their determination that the affected work be accepted and remain in place. RPR will document the determination and recommend to Owner a basis of acceptance that will provide for an adjustment in the contract price for the affected portion of the work. Changes in the contract price must be covered by contract change order or supplemental agreement as applicable.

If RPR finds the materials furnished, work performed, or the finished product are not in reasonably close conformity with the plans and specifications and have resulted in an unacceptable finished product, the affected work or materials shall be removed and replaced or otherwise corrected by and at the expense of Contractor in accordance with RPR's written orders.

The term "reasonably close conformity" shall not be construed as waiving Contractor's responsibility to complete the work in accordance with the contract, plans, and specifications. The term shall not be construed as waiving RPR's responsibility to insist on strict compliance with the requirements of the contract, plans, and specifications during Contractor's execution of the work, when, in RPR's opinion, such compliance is essential to provide an acceptable finished portion of the work.

The term "reasonably close conformity" is also intended to provide RPR with the authority, after consultation with the Sponsor and FAA, to use sound engineering judgment in their determinations to accept work that is not in strict conformity, but will provide a finished product equal to or better than that required by the requirements of the contract, plans and specifications.

RPR will not be responsible for Contractor's means, methods, techniques, sequences, or procedures of construction or the safety precautions incident thereto.

50-03 Coordination of contract, plans, and specifications. The contract, plans, specifications, and all referenced standards cited are essential parts of the contract requirements. If electronic files are provided and used on the project and there is a conflict between the electronic files and hard copy plans, the hard copy plans shall govern. A requirement occurring in one is as binding as though occurring in all. They are intended to be complementary and to describe and provide for a complete work. In case of discrepancy, calculated dimensions will govern over scaled dimensions; contract technical specifications shall govern over contract general provisions, plans, cited standards for materials or testing, and cited advisory circulars (ACs); contract general provisions shall govern over plans, cited standards for materials or testing, and cited ACs; plans shall govern over cited standards for materials or testing and cited ACs. If any paragraphs

contained in the Special Provisions conflict with General Provisions or Technical Specifications, the Special Provisions shall govern.

From time to time, discrepancies within cited testing standards occur due to the timing of the change, edits, and/or replacement of the standards. If Contractor discovers any apparent discrepancy within standard test methods, Contractor shall immediately ask RPR for an interpretation and decision, and such decision shall be final.

Contractor shall not take advantage of any apparent error or omission on the plans or specifications. In the event Contractor discovers any apparent error or discrepancy, Contractor shall immediately notify Owner or the designated representative in writing requesting their written interpretation and decision.

50-04 List of Special Provisions.

SP-1 Scope of Work
SP-2 Contract Documents
SP-3 Time and Order of Completion
SP-4 Limitation of Operation
SP-5 Construction Activity
SP-6 Affidavit of Bills Paid
SP-7 Calendar Day
SP-8 Protection of Property
SP-9 Electric Power and Natural Gas
SP-10 Lines and Grades
SP-11 Water for Construction
SP-12 Material Tests
SP-13 Barricades, Signs, and Hazard Markings
SP-14 Prevention of Air and Water Pollution
SP-15 Public Convenience and Safety
SP-16 Final Cleaning
SP-17 Insurance
SP-18 Removal and Disposal of Structures, Utilities and Obstructions
SP-19 Conformity with Plans and Allowable Deviations
SP-20 Removal of Defective and Unauthorized Work
SP-21 Disputed Claims for Extra Work
SP-22 Federal Participation
SP-23 Indemnification
SP-24 Contractor Responsibility for Work
SP-25 Correction of Faulty Work after Final Payment
SP-26 Texas State Sales Tax
SP-27 Separate Contracts
SP-28 Trench Safety
SP-29 Load Restrictions
SP-30 Notice to Proceed
SP-31 Payment for Materials on Hand
SP-32 Weighing and Measuring Equipment
SP-33 Progress Schedule
SP-34 Average Climatic Range
SP-35 Substantially Complete
SP-36 Submittals
SP-37 Geotechnical Information
SP-38 Sovereign Immunity

SP-39 Governing Law and Venue
SP-40 Third-Party Beneficiary
SP-41 Releases
SP-42 Independent Contractor
SP-43 Notice of Alleged Breach; Statutory Prerequisites
SP-44 Assignment
SP-45 Waiver of Attorney's Fees
SP-46 Prompt Pay Act
SP-47 Payment
SP-48 Project Closeout
SP-49 Disclosure of Interested Parties
SP-50 Parkhill/RPR Authority and Duty
SP-51 Anti-Boycott Statutes

50-05 Cooperation of Contractor. Contractor shall be supplied with five hard copies or an electronic PDF of the plans and specifications. Contractor shall have available on the construction site at all times one hardcopy each of the plans and specifications. Additional hard copies of plans and specifications may be obtained by Contractor for the cost of reproduction.

Contractor shall give constant attention to the work to facilitate the progress thereof, and shall cooperate with RPR and their inspectors and with other Contractors in every way possible. Contractor shall have a competent superintendent on the work at all times who is fully authorized as their agent on the work. The superintendent shall be capable of reading and thoroughly understanding the plans and specifications and shall receive and fulfill instructions from RPR or their authorized representative.

50-06 Cooperation between Contractors. Owner reserves the right to contract for and perform other or additional work on or near the work covered by this contract.

When separate contracts are let within the limits of any one project, each Contractor shall conduct the work not to interfere with or hinder the progress of completion of the work being performed by other Contractors. Contractors working on the same project shall cooperate with each other as directed.

Each Contractor involved shall assume all liability, financial or otherwise, in connection with their own contract and shall protect and hold harmless Owner from any and all damages or claims that may arise because of inconvenience, delays, or loss experienced because of the presence and operations of other Contractors working within the limits of the same project.

Contractor shall arrange their work and shall place and dispose of the materials being used to not interfere with the operations of the other Contractors within the limits of the same project. Contractor shall join their work with that of the others in an acceptable manner and shall perform it in proper sequence to that of the others.

50-07 Construction layout and stakes. Engineer/RPR shall establish necessary horizontal and vertical control. The establishment of Survey Control and/or reestablishment of survey control shall be by a State Licensed Land Surveyor. Contractor is responsible for preserving integrity of horizontal and vertical controls established by Engineer/RPR. In case of negligence on the part of Contractor or their employees, resulting in the destruction of any horizontal and vertical control, the resulting costs will be deducted as a liquidated damage against Contractor.

Prior to the start of construction, Contractor will check all control points for horizontal and vertical accuracy and certify in writing to RPR that Contractor concurs with survey control established for the project. All lines, grades and measurements from control points necessary for the proper execution and control of the work on this project will be provided to RPR. Contractor is responsible to establish all layout required for the construction of the project.

Copies of survey notes will be provided to RPR for each area of construction and for each placement of material as specified to allow RPR to make periodic checks for conformance with plan grades, alignments and grade tolerances required by the applicable material specifications. Surveys will be provided to RPR prior to commencing work items that cover or disturb the survey staking. Survey(s) and notes shall be provided in DWG and PDF.

Laser, GPS, String line, or other automatic control shall be checked with temporary control as necessary. In the case of error, on the part of Contractor, their surveyor, employees or subcontractors, resulting in established grades, alignment or grade tolerances that do not concur with those specified or shown on the plans, Contractor is solely responsible for correction, removal, replacement and all associated costs at no additional cost to Owner.

No direct payment will be made, unless otherwise specified in contract documents, for this labor, materials, or other expenses. The cost shall be included in the price of the bid for the various items of the Contract.

50-08 Authority and duties of Quality Assurance (QA) inspectors. QA inspectors shall be authorized to inspect all work done and all material furnished. Such QA inspection may extend to all or any part of the work and to the preparation, fabrication, or manufacture of the materials to be used. QA inspectors are not authorized to revoke, alter, or waive any provision of the contract. QA inspectors are not authorized to issue instructions contrary to the plans and specifications or to act as foreman for Contractor.

QA Inspectors are authorized to notify Contractor or their representatives of any failure of the work or materials to conform to the requirements of the contract, plans, or specifications and to reject such nonconforming materials in question until such issues can be referred to RPR for a decision.

50-09 Inspection of the work. All materials and each part or detail of the work shall be subject to inspection. RPR shall be allowed access to all parts of the work and shall be furnished with such information and assistance by Contractor as is required to make a complete and detailed inspection.

If RPR requests it, Contractor, at any time before acceptance of the work, shall remove or uncover such portions of the finished work as may be directed. After examination, Contractor shall restore said portions of the work to the standard required by the specifications. Should the work thus exposed or examined prove acceptable, the uncovering, or removing, and the replacing of the covering or making good of the parts removed will be paid for as extra work; but should the work so exposed or examined prove unacceptable, the uncovering, or removing, and the replacing of the covering or making good of the parts removed will be at Contractor's expense.

Provide advance written notice to RPR of work Contractor plans to perform each week and each day. Any work done or materials used without written notice and allowing opportunity for inspection by RPR may be ordered removed and replaced at Contractor's expense.

Should the contract work include relocation, adjustment, or any other modification to existing facilities, not the property of the (contract) Owner, authorized representatives of Owners of such facilities shall have the right to inspect such work. Such inspection shall in no sense make any facility owner a party to the contract, and shall in no way interfere with the rights of the parties to this contract.

50-10 Removal of unacceptable and unauthorized work. All work that does not conform to the requirements of the contract, plans, and specifications will be considered unacceptable, unless otherwise determined acceptable by RPR as provided in paragraph 50-02, *Conformity with Plans and Specifications*.

Unacceptable work, whether the result of poor workmanship, use of defective materials, damage through carelessness, or any other cause found to exist prior to the final acceptance of the work, shall be removed immediately and replaced in an acceptable manner in accordance with the provisions of Section 70, paragraph 70-14, *Contractor's Responsibility for Work*.

No removal work made under provision of this paragraph shall be done without lines and grades having been established by RPR. Work done contrary to the instructions of RPR, work done beyond the lines shown on the plans or as established by RPR, except as herein specified, or any extra work done without authority, will be considered as unauthorized and will not be paid for under the provisions of the contract. Work so done may be ordered removed or replaced at Contractor's expense.

Upon failure on the part of Contractor to comply with any order of RPR made under the provisions of this subsection, RPR will have authority to cause unacceptable work to be remedied or removed and replaced; and unauthorized work to be removed and recover the resulting costs as a liquidated damage against Contractor.

50-11 Load restrictions. Contractor shall comply with all legal load restrictions in the hauling of materials on public roads beyond the limits of the work. A special permit will not relieve Contractor of liability for damage that may result from the moving of material or equipment.

The operation of equipment of such weight or so loaded as to cause damage to structures or to any other type of construction will not be permitted. Hauling of materials over the base course or surface course under construction shall be limited as directed. No loads will be permitted on a concrete pavement, base, or structure before the expiration of the curing period. Contractor, at their own expense, shall be responsible for the repair to equal or better than preconstruction conditions of any damage caused by Contractor's equipment and personnel.

50-12 Maintenance during construction. Contractor shall maintain the work during construction and until the work is accepted. Maintenance shall constitute continuous and effective work prosecuted day by day, with adequate equipment and forces so that the work is maintained in satisfactory condition at all times.

In the case of a contract for the placing of a course upon a course or subgrade previously constructed, Contractor shall maintain the previous course or subgrade during all construction operations.

All costs of maintenance work during construction and before the project is accepted shall be included in the unit prices bid on the various contract items, and Contractor will not be paid an additional amount for such work.

50-13 Failure to maintain the work. Should Contractor at any time fail to maintain the work as provided in paragraph 50-12, *Maintenance during Construction*, RPR shall immediately notify Contractor of such noncompliance. Such notification shall specify a reasonable time within which Contractor shall be required to remedy such unsatisfactory maintenance condition. The time specified will give due consideration to the exigency that exists.

Should Contractor fail to respond to RPR's notification, Owner may suspend any work necessary for Owner to correct such unsatisfactory maintenance condition, depending on the exigency that exists. Any maintenance cost incurred by Owner, shall be recovered as a liquidated damage against Contractor.

50-14 Partial acceptance. If at any time during the execution of the project Contractor substantially completes a usable unit or portion of the work, the occupancy of which will benefit Owner, Contractor may request RPR to make final inspection of that unit. If RPR finds upon inspection that the unit has been satisfactorily completed in compliance with the contract, RPR may accept it as being complete, and Contractor may be relieved of further responsibility for that unit. Such partial acceptance and beneficial occupancy by Owner shall not void or alter any provision of the contract.

50-15 Final acceptance. Upon due notice from Contractor of presumptive completion of the entire project, RPR and Owner will make an inspection. If all construction provided for and contemplated by the contract is found to be complete in accordance with the contract, plans, and specifications, such inspection shall constitute the final inspection. RPR shall notify Contractor in writing of final acceptance as of the date of the final inspection.

If, however, the inspection discloses any work, in whole or in part, as being unsatisfactory, RPR will notify Contractor and Contractor shall correct the unsatisfactory work. Upon correction of the work, another inspection will be made which shall constitute the final inspection, provided the work has been satisfactorily completed. In such event, RPR will make the final acceptance and notify Contractor in writing of this acceptance as of the date of final inspection.

50-16 Claims for adjustment and disputes. If for any reason Contractor deems that additional compensation is due for work or materials not clearly provided for in the contract, plans, or specifications or previously authorized as extra work, Contractor shall notify RPR in writing of their intention to claim such additional compensation before Contractor begins the work on which Contractor bases the claim. If such notification is not given or RPR is not afforded proper opportunity by Contractor for keeping strict account of actual cost as required, then Contractor hereby agrees to waive any claim for such additional compensation. Such notice by Contractor and the fact that RPR has kept account of the cost of the work shall not in any way be construed as proving or substantiating the validity of the claim. When the work on which the claim for additional compensation is based has been completed, Contractor shall, within 10 calendar days, submit a written claim to RPR who will present it to Owner for consideration in accordance with local laws or ordinances.

Nothing in this subsection shall be construed as a waiver of Contractor's right to dispute final payment based on differences in measurements or computations.

END OF SECTION 50

Section 60 Control of Materials

60-01 Source of supply and quality requirements. The materials used in the work shall conform to the requirements of the contract, plans, and specifications. Unless otherwise specified, such materials that are manufactured or processed shall be new (as compared to used or reprocessed).

In order to expedite the inspection and testing of materials, Contractor shall furnish documentation to RPR as to the origin, composition, and manufacture of all materials to be used in the work. Documentation shall be furnished promptly after execution of the contract but, in all cases, prior to delivery of such materials.

At RPR's option, materials may be approved at the source of supply before delivery. If it is found after trial that sources of supply for previously approved materials do not produce specified products, Contractor shall furnish materials from other sources.

Contractor shall furnish airport lighting equipment that meets the requirements of the specifications; and is listed in AC 150/5345-53, *Airport Lighting Equipment Certification Program* and *Addendum*, that is in effect on the date of advertisement.

60-02 Samples, tests, and cited specifications. All materials used in the work shall be inspected, tested, and approved by RPR before incorporation in the work unless otherwise designated. Any work in which untested materials are used without approval or written permission of RPR shall be performed at Contractor's risk. Materials found to be unacceptable and unauthorized will not be paid for and, if directed by RPR, shall be removed at Contractor's expense.

Unless otherwise designated, quality assurance tests will be made by and at the expense of Owner in accordance with the cited standard methods of ASTM, American Association of State Highway and Transportation Officials (AASHTO), federal specifications, Commercial Item Descriptions, and all other cited methods, which are current on the date of advertisement for bids.

The testing organizations performing on-site quality assurance field tests shall have copies of all referenced standards on the construction site for use by all technicians and other personnel. Unless otherwise designated, samples for quality assurance will be taken by a qualified representative of RPR. All materials being used are subject to inspection, test, or rejection at any time prior to or during incorporation into the work. Copies of all tests will be furnished to Contractor's representative at their request after review and approval of RPR.

A copy of all Contractor QC test data shall be provided to RPR daily, along with printed reports, in an approved format, on a weekly basis. After completion of the project, and prior to final payment, Contractor shall submit a final report to RPR showing all test data reports, plus an analysis of all results showing ranges, averages, and corrective action taken on all failing tests.

Contractor shall employ a Quality Control (QC) testing organization to perform all Contractor required QC tests in accordance with Item C-100 Contractor Quality Control Program (CQCP).

60-03 Certification of compliance/analysis (COC/COA). RPR may permit the use, prior to sampling and testing, of certain materials or assemblies when accompanied by manufacturer's COC stating that such materials or assemblies fully comply with the requirements of the contract. The certificate shall be signed by the manufacturer. Each lot of such materials or assemblies delivered to the work must be accompanied by a certificate of compliance in which the lot is clearly identified. The COA is the manufacturer's COC and includes all applicable test results.

Materials or assemblies used on the basis of certificates of compliance may be sampled and tested at any time and if found not to be in conformity with contract requirements will be subject to rejection whether in place or not.

The form and distribution of certificates of compliance shall be as approved by RPR.

When a material or assembly is specified by "brand name or equal" and Contractor elects to furnish the specified "or equal," Contractor shall be required to furnish the manufacturer's certificate of compliance for each lot of such material or assembly delivered to the work. Such certificate of compliance shall clearly identify each lot delivered and shall certify as to:

a. Conformance to the specified performance, testing, quality or dimensional requirements; and,

b. Suitability of the material or assembly for the use intended in the contract work.

RPR shall be the sole judge as to whether the proposed "or equal" is suitable for use in the work.

RPR reserves the right to refuse permission for use of materials or assemblies on the basis of certificates of compliance.

60-04 Plant inspection. RPR or their authorized representative may inspect, at its source, any specified material or assembly to be used in the work. Manufacturing plants may be inspected from time to time for the purpose of determining compliance with specified manufacturing methods or materials to be used in the work and to obtain samples required for acceptance of the material or assembly.

Should RPR conduct plant inspections, the following conditions shall exist:

a. RPR shall have the cooperation and assistance of Contractor and the producer with whom Contractor has contracted for materials.

b. RPR shall have full entry at all reasonable times to such parts of the plant that concern the manufacture or production of the materials being furnished.

c. If required by RPR, Contractor shall arrange for adequate office or working space that may be reasonably needed for conducting plant inspections. Place office or working space in a convenient location with respect to the plant.

It is understood and agreed that Owner shall have the right to retest any material that has been tested and approved at the source of supply after it has been delivered to the site. RPR shall have the right to reject only material which, when retested, does not meet the requirements of the contract, plans, or specifications.

60-05 Engineer/ Resident Project Representative (RPR) field office. Contractor shall provide dedicated space for the use of Engineer, RPR, and inspectors, as a field office for the duration of the project. This space shall be located conveniently near the construction and shall be separate from any space used by Contractor. Contractor shall furnish water, sanitary facilities, heat, air conditioning, and electricity.

60-06 Storage of materials. Materials shall be stored to assure the preservation of their quality and fitness for the work. Stored materials, even though approved before storage, may again be inspected prior to their use in the work. Stored materials shall be located to facilitate their prompt inspection. Contractor shall coordinate the storage of all materials with RPR. Materials to be stored on airport property shall not create an obstruction to air navigation nor shall they interfere with the free and unobstructed movement of aircraft. Unless otherwise shown on the plans and/or CSPP, the storage of materials and the location of Contractor's plant and parked equipment or vehicles shall be as directed by RPR. Private property shall not be used for storage purposes without written permission of Owner or lessee of such property. Contractor shall make all arrangements and bear all expenses for the storage of materials on private property. Upon request, Contractor shall furnish RPR a copy of the property Owner's permission.

All storage sites on private or airport property shall be restored to their original condition by Contractor at their expense, except as otherwise agreed to (in writing) by Owner or lessee of the property.

60-07 Unacceptable materials. Any material or assembly that does not conform to the requirements of the contract, plans, or specifications shall be considered unacceptable and shall be rejected. Contractor shall remove any rejected material or assembly from the site of the work, unless otherwise instructed by RPR.

Rejected material or assembly, the defects of which have been corrected by Contractor, shall not be returned to the site of the work until such time as RPR has approved its use in the work.

60-08 Owner furnished materials. Contractor shall furnish all materials required to complete the work, except those specified, if any, to be furnished by Owner. Owner-furnished materials shall be made available to Contractor at the location specified.

All costs of handling, transportation from the specified location to the site of work, storage, and installing Owner-furnished materials shall be included in the unit price bid for the contract item in which such Owner-furnished material is used.

After any Owner-furnished material has been delivered to the location specified, Contractor shall be responsible for any demurrage, damage, loss, or other deficiencies that may occur during Contractor's handling, storage, or use of such Owner-furnished material. Owner will deduct from any monies due or to become due Contractor any cost incurred by Owner in making good such loss due to Contractor's handling, storage, or use of Owner-furnished materials.

END OF SECTION 60

Section 70 Legal Regulations and Responsibility to Public

70-01 Laws to be observed. Contractor shall keep fully informed of all federal and state laws, all local laws, ordinances, and regulations and all orders and decrees of bodies or tribunals having any jurisdiction or authority, which in any manner affect those engaged or employed on the work, or which in any way affect the conduct of the work. Contractor shall at all times observe and comply with all such laws, ordinances, regulations, orders, and decrees; and shall protect and indemnify Owner and all their officers, agents, or servants against any claim or liability arising from or based on the violation of any such law, ordinance, regulation, order, or decree, whether by Contractor or Contractor's employees.

70-02 Permits, licenses, and taxes. Contractor shall procure all permits and licenses, pay all charges, fees, and taxes, and give all notices necessary and incidental to the due and lawful execution of the work.

70-03 Patented devices, materials, and processes. If Contractor is required or desires to use any design, device, material, or process covered by letters of patent or copyright, Contractor shall provide for such use by suitable legal agreement with the Patentee or Owner. Contractor and the surety shall indemnify and hold harmless Owner, any third party, or political subdivision from any and all claims for infringement by reason of the use of any such patented design, device, material or process, or any trademark or copyright, and shall indemnify Owner for any costs, expenses, and damages which it may be obliged to pay by reason of an infringement, at any time during the execution or after the completion of the work.

70-04 Restoration of surfaces disturbed by others. Owner reserves the right to authorize the construction, reconstruction, or maintenance of any public or private utility service, FAA or National Oceanic and Atmospheric Administration (NOAA) facility, or a utility service of another government agency at any time during the progress of the work. To the extent that such construction, reconstruction, or maintenance has been coordinated with Owner, such authorized work (by others) must be shown on plans and indicated.

Except as listed above, Contractor shall not permit any individual, firm, or corporation to excavate or otherwise disturb such utility services or facilities located within the limits of the work without the written permission of RPR.

Should Owner of public or private utility service, FAA, or NOAA facility, or a utility service of another government agency be authorized to construct, reconstruct, or maintain such utility service or facility during the progress of the work, Contractor shall cooperate with such Owners by arranging and performing the work in this contract to facilitate such construction, reconstruction or maintenance by others whether or not such work by others is listed above. When ordered as extra work by RPR, Contractor shall make all necessary repairs to the work which are due to such authorized work by others, unless otherwise provided for in the contract, plans, or specifications. It is understood and agreed that Contractor shall not be entitled to make any claim for damages due to such authorized work by others or for any delay to the work resulting from such authorized work.

70-05 Federal Participation. The United States Government has agreed to reimburse Owner for some portion of the contract costs. The contract work is subject to the inspection and approval of duly authorized representatives of the FAA Administrator. No requirement of this contract shall be construed as making the United States a party to the contract nor will any such requirement interfere, in any way, with the rights of either party to the contract.

70-06 Sanitary, health, and safety provisions. Contractor's worksite and facilities shall comply with applicable federal, state, and local requirements for health, safety, and sanitary provisions.

70-07 Public convenience and safety. Contractor shall control their operations and those of their subcontractors and all suppliers, to assure the least inconvenience to the traveling public. Under all circumstances, safety shall be the most important consideration.

Contractor shall maintain the free and unobstructed movement of aircraft and vehicular traffic with respect to their own operations and those of their own subcontractors and all suppliers in accordance with Section 40, paragraph 40-05, *Maintenance of Traffic,* and shall limit such operations for the convenience and safety of the traveling public as specified in Section 80, paragraph 80-04, *Limitation of Operations*.

Contractor shall remove or control debris and rubbish resulting from its work operations at frequent intervals, and upon the order of RPR. If RPR determines the existence of Contractor debris in the work site represents a hazard to airport operations and Contractor is unable to respond in a prompt and reasonable manner, RPR reserves the right to assign the task of debris removal to a third party and recover the resulting costs as a liquidated damage against Contractor.

70-08 Construction Safety and Phasing Plan (CSPP). Contractor shall complete the work in accordance with the approved Construction Safety and Phasing Plan (CSPP) developed in accordance with AC 150/5370-2, Operational Safety on Airports During Construction. CSPP is included on Project plans.

70-09 Use of explosives. The use of explosives is not permitted on this project.

70-10 Protection and restoration of property and landscape. Contractor shall be responsible for the preservation of all public and private property, and shall protect carefully from disturbance or damage all land monuments and property markers until Engineer/RPR has witnessed or otherwise referenced their location and shall not move them until directed.

Contractor shall be responsible for all damage or injury to property of any character, during the execution of the work, resulting from any act, omission, neglect, or misconduct in manner or method of executing the work, or at any time due to defective work or materials, and said responsibility shall not be released until the project has been completed and accepted.

When or where any direct or indirect damage or injury is done to public or private property by or on account of any act, omission, neglect, or misconduct in the execution of the work, or in consequence of the non-execution thereof by Contractor, Contractor shall restore, at their expense, such property to a condition similar or equal to that existing before such damage or injury was done, by repairing, or otherwise restoring as may be directed, or Contractor shall make good such damage or injury in an acceptable manner.

70-11 Responsibility for damage claims. Contractor shall indemnify and hold harmless Engineer/RPR and Owner and their officers, agents, and employees from all suits, actions, or claims, of any character, brought because of any injuries or damage received or sustained by any person, persons, or property on account of the operations of Contractor; or on account of or in consequence of any neglect in safeguarding the work; or through use of unacceptable materials in constructing the work; or because of any act or omission, neglect, or misconduct of said Contractor; or because of any claims or amounts recovered from any infringements of patent, trademark, or copyright; or from any claims or amounts arising or recovered under the "Workmen's Compensation Act," or any other law, ordinance, order, or decree. Money due Contractor under and by virtue of their own contract considered necessary by Owner for such purpose may be retained for the use of Owner or, in case no money is due, their own surety may be held until such suits, actions, or claims for injuries or damages shall have been settled and suitable evidence to that effect furnished to Owner, except that money due Contractor will not be withheld when Contractor produces satisfactory evidence that he or she is adequately protected by public liability and property damage insurance.

70-12 Third party beneficiary clause. It is specifically agreed between the parties executing the contract that it is not intended by any of the provisions of any part of the contract to create for the public or any

member thereof, a third-party beneficiary or to authorize anyone not a party to the contract to maintain a suit for personal injuries or property damage pursuant to the terms or provisions of the contract.

70-13 Opening sections of the work to traffic. If it is necessary for Contractor to complete portions of the contract work for the beneficial occupancy of Owner prior to completion of the entire contract, such "phasing" of the work must be specified below and indicated on the approved Construction Safety and Phasing Plan (CSPP) and the project plans. When so specified, Contractor shall complete such portions of the work on or before the date specified or as otherwise specified in the CSPP.

Upon completion of any portion of work listed above, such portion shall be accepted by Owner in accordance with Section 50, paragraph 50-14, *Partial Acceptance*.

No portion of the work may be opened by Contractor until directed by Owner in writing. Should it become necessary to open a portion of the work to traffic on a temporary or intermittent basis, such openings shall be made when, in the opinion of RPR, such portion of the work is in an acceptable condition to support the intended traffic. Temporary or intermittent openings are considered to be inherent in the work and shall not constitute either acceptance of the portion of the work so opened or a waiver of any provision of the contract. Any damage to the portion of the work so opened that is not attributable to traffic which is permitted by Owner shall be repaired by Contractor at their expense.

Contractor shall make their own estimate of the inherent difficulties involved in completing the work under the conditions herein described and shall not claim any added compensation by reason of delay or increased cost due to opening a portion of the contract work.

Contractor must conform to safety standards contained AC 150/5370-2 and the approved CSPP.

Contractor shall refer to the plans, specifications, and the approved CSPP to identify barricade requirements, temporary and/or permanent markings, airfield lighting, guidance signs and other safety requirements prior to opening up sections of work to traffic.

70-14 Contractor's responsibility for work. Until RPR's final written acceptance of the entire completed work, excepting only those portions of the work accepted in accordance with Section 50, paragraph 50-14, *Partial Acceptance*, Contractor shall have the charge and care thereof and shall take every precaution against injury or damage to any part due to the action of the elements or from any other cause, whether arising from the execution or from the non-execution of the work. Contractor shall rebuild, repair, restore, and make good all injuries or damages to any portion of the work occasioned by any of the above causes before final acceptance and shall bear the expense thereof except damage to the work due to unforeseeable causes beyond the control of and without the fault or negligence of Contractor, including but not restricted to acts of God such as earthquake, tidal wave, tornado, hurricane or other cataclysmic phenomenon of nature, or acts of the public enemy or of government authorities.

If the work is suspended for any cause whatever, Contractor shall be responsible for the work and shall take such precautions necessary to prevent damage to the work. Contractor shall provide for normal drainage and shall erect necessary temporary structures, signs, or other facilities at their own expense. During such period of suspension of work, Contractor shall properly and continuously maintain in an acceptable growing condition all living material in newly established planting, seeding, and sodding furnished under the contract, and shall take adequate precautions to protect new tree growth and other important vegetative growth against injury.

70-15 Contractor's responsibility for utility service and facilities of others. As provided in paragraph 70-04, *Restoration of Surfaces Disturbed by Others*, Contractor shall cooperate with Owner of any public or private utility service, FAA or NOAA, or a utility service of another government agency that may be authorized by Owner to construct, reconstruct or maintain such utility services or facilities during the progress of the work. In addition, Contractor shall control their operations to prevent the unscheduled interruption of such utility services and facilities.

To the extent that such public or private utility services, FAA, or NOAA facilities, or utility services of another governmental agency are known to exist within the limits of the contract work, the approximate locations have been indicated on the plans and/or in the contract documents.

It is understood and agreed that Owner does not guarantee the accuracy or the completeness of the location information relating to existing utility services, facilities, or structures that may be shown on the plans or encountered in the work. Any inaccuracy or omission in such information shall not relieve Contractor of the responsibility to protect such existing features from damage or unscheduled interruption of service.

It is further understood and agreed that Contractor shall, upon execution of the contract, notify Owners of all utility services or other facilities of their plan of operations. Such notification shall be in writing addressed to "The Person to Contact" as provided in this paragraph and paragraph 70-04, *Restoration of Surfaces Disturbed By Others*. A copy of each notification shall be given to RPR.

In addition to the general written notification provided, it shall be the responsibility of Contractor to keep such individual Owners advised of changes in their plan of operations that would affect such Owners.

Prior to beginning the work in the general vicinity of an existing utility service or facility, Contractor shall again notify each such Owner of their plan of operation. If, in Contractor's opinion, Owner's assistance is needed to locate the utility service or facility or the presence of a representative of Owner is desirable to observe the work, such advice should be included in the notification. Such notification shall be given by the most expeditious means to reach the utility owner's "Person to Contact" no later than two normal business days prior to Contractor's commencement of operations in such general vicinity. Contractor shall furnish a written summary of the notification to RPR.

Contractor's failure to give the two days' notice shall be cause for Owner to suspend Contractor's operations in the general vicinity of a utility service or facility.

Where the outside limits of an underground utility service have been located and staked on the ground, Contractor shall be required to use hand excavation methods within 3 feet (1 m) of such outside limits at such points as may be required to ensure protection from damage due to Contractor's operations.

Should Contractor damage or interrupt the operation of a utility service or facility by accident or otherwise, Contractor shall immediately notify the proper authority and RPR and shall take all reasonable measures to prevent further damage or interruption of service. Contractor, in such events, shall cooperate with the utility service or facility owner and RPR continuously until such damage has been repaired and service restored to the satisfaction of the utility or facility owner.

Contractor shall bear all costs of damage and restoration of service to any utility service or facility due to their operations whether due to negligence or accident. Owner reserves the right to deduct such costs from any monies due or which may become due Contractor, or their own surety.

70-15.1 FAA facilities and cable runs. Contractor is hereby advised that the construction limits of the project include existing facilities and buried cable runs that are owned, operated, and maintained by the FAA. Contractor, during the execution of the project work, shall comply with the following:

a. Contractor shall permit FAA maintenance personnel the right of access to the project work site for purposes of inspecting and maintaining all existing FAA owned facilities.

b. Contractor shall provide notice to the FAA Air Traffic Organization (ATO)/Technical Operations/System Support Center (SSC) Point-of-Contact through the airport a minimum of seven (calendar days prior to commencement of construction activities in order to permit sufficient time to locate and mark existing buried cables and to schedule any required facility outages.

c. If execution of the project work requires a facility outage, Contractor shall contact the FAA Point-of-Contact a minimum of 72 hours prior to the time of the required outage.

d. Any damage to FAA cables, access roads, or FAA facilities during construction caused by Contractor's equipment or personnel whether by negligence or accident will require Contractor to repair or replace the damaged cables, access road, or FAA facilities to FAA requirements. Contractor shall not bear the cost to repair damage to underground facilities or utilities improperly located by the FAA.

e. If the project work requires the cutting or splicing of FAA owned cables, the FAA Point-of-Contact shall be contacted a minimum of 72 hours prior to the time the cable work commences. The FAA reserves the right to have a FAA representative on site to observe the splicing of the cables as a condition of acceptance. All cable splices are to be accomplished in accordance with FAA specifications and require approval by the FAA Point-of-Contact as a condition of acceptance by Owner. Contractor is hereby advised that FAA restricts the location of where splices may be installed. If a cable splice is required in a location that is not permitted by FAA, Contractor shall furnish and install a sufficient length of new cable that eliminates the need for any splice.

70-16 Furnishing rights-of-way. Owner will be responsible for furnishing all rights-of-way upon which the work is to be constructed in advance of Contractor's operations.

70-17 Personal liability of public officials. In carrying out any of the contract provisions or in exercising any power or authority granted by this contract, there shall be no liability upon Engineer, RPR, their authorized representatives, or any officials of Owner either personally or as an official of Owner. It is understood that in such matters they act solely as agents and representatives of Owner.

70-18 No waiver of legal rights. Upon completion of the work, Owner will expeditiously make final inspection and notify Contractor of final acceptance. Such final acceptance, however, shall not preclude or stop Owner from correcting any measurement, estimate, or certificate made before or after completion of the work, nor shall Owner be precluded or stopped from recovering from Contractor or their surety, or both, such overpayment as may be sustained, or by failure on the part of Contractor to fulfill their obligations under the contract. A waiver on the part of Owner of any breach of any part of the contract shall not be held to be a waiver of any other or subsequent breach.

Contractor, without prejudice to the terms of the contract, shall be liable to Owner for latent defects, fraud, or such gross mistakes as may amount to fraud, or as regards Owner's rights under any warranty or guaranty.

70-19 Environmental protection. Contractor shall comply with all federal, state, and local laws and regulations controlling pollution of the environment. Contractor shall take necessary precautions to prevent pollution of streams, lakes, ponds, and reservoirs with fuels, oils, asphalts, chemicals, or other harmful materials and to prevent pollution of the atmosphere from particulate and gaseous matter.

70-20 Archaeological and historical findings. Unless otherwise specified in this subsection, Contractor is advised that the site of the work is not within any property, district, or site, and does not contain any building, structure, or object listed in the current National Register of Historic Places published by the United States Department of Interior.

Should Contractor encounter, during their operations, any building, part of a building, structure, or object that is incongruous with its surroundings, Contractor shall immediately cease operations in that location and notify RPR. RPR will immediately investigate Contractor's finding and Owner will direct Contractor to either resume operations or to suspend operations as directed.

Should Owner order suspension of Contractor's operations in order to protect an archaeological or historical finding, or order Contractor to perform extra work, such shall be covered by an appropriate contract change order or supplemental agreement as provided in Section 40, paragraph 40-04, *Extra Work,* and Section 90, paragraph 90-05, *Payment for Extra Work*. If appropriate, the contract change order or supplemental agreement shall include an extension of contract time in accordance with Section 80, paragraph 80-07, *Determination and Extension of Contract Time*.

70-21 Insurance Requirements. See Section GC-31, Contractor Insurance.

END OF SECTION 70

Section 80 Execution and Progress

80-01 Subletting of contract. Owner will not recognize any subcontractor on the work. Contractor shall at all times when work is in progress be represented either in person, by a qualified superintendent, or by other designated, qualified representative who is duly authorized to receive and execute orders of the Resident Project Representative (RPR).

Contractor shall perform, with his organization, an amount of work equal to at least 25 percent of the total contract cost.

Should Contractor elect to assign their contract, said assignment shall be concurred in by the surety, shall be presented for the consideration and approval of Owner, and shall be consummated only on the written approval of Owner.

Contractor shall provide copies of all subcontracts to RPR 14 days prior to being utilized on the project. As a minimum, the information shall include the following:

- Subcontractor's legal company name.
- Subcontractor's legal company address, including County name.
- Principal contact person's name, phone, and fax number.
- Complete narrative description, and dollar value of work to be performed by the subcontractor.
- Copies of required insurance certificates in accordance with the specifications.
- Minority/ non-minority status.

80-02 Notice to proceed (NTP). Owners notice to proceed will state the date on which contract time commences. Contractor is expected to commence project operations within 10 days of the NTP date. Contractor shall notify RPR at least 24 hours in advance of the time contract operations begins. Contractor shall not commence any actual operations prior to the date on which the notice to proceed is issued by Owner.

80-03 Execution and progress. Unless otherwise specified, Contractor shall submit their coordinated construction schedule showing all work activities for RPR’s review and acceptance at least 10 days prior to the start of work. Contractor’s progress schedule, once accepted by RPR, will represent Contractor's baseline plan to accomplish the project in accordance with the terms and conditions of the Contract. RPR will compare actual Contractor progress against the baseline schedule to determine that status of Contractor's performance. Contractor shall provide sufficient materials, equipment, and labor to guarantee the completion of the project in accordance with the plans and specifications within the time set forth in the proposal.

If Contractor falls significantly behind the submitted schedule, Contractor shall, upon RPR’s request, submit a revised schedule for completion of the work within the contract time and modify their operations to provide such additional materials, equipment, and labor necessary to meet the revised schedule. Should the execution of the work be discontinued for any reason, Contractor shall notify RPR at least 24 hours in advance of resuming operations.

Contractor shall not commence any actual construction prior to the date on which the NTP is issued by Owner.

Project schedule shall be prepared as a network diagram in Critical Path Method (CPM), Program Evaluation and Review Technique (PERT), or other format, or as otherwise specified. It shall include information on the sequence of work activities, milestone dates, and activity duration. The schedule shall show all work items identified in the project proposal for each work area and shall include the project start date and end date.

Contractor shall maintain the work schedule and provide an update and analysis of the progress schedule on a twice monthly basis, or as otherwise specified in the contract. Submission of the work schedule shall not relieve Contractor of overall responsibility for scheduling, sequencing, and coordinating all work to comply with the requirements of the contract.

80-04 Limitation of operations. Contractor shall control their operations and the operations of their subcontractors and all suppliers to provide for the free and unobstructed movement of aircraft in the air operations areas (AOA) of the airport.

When the work requires Contractor to conduct their operations within an AOA of the airport, the work shall be coordinated with airport operations (through RPR) at least 48 hours prior to commencement of such work. Contractor shall not close an AOA until so authorized by RPR and until the necessary temporary marking, signage and associated lighting is in place as provided in Section 70, paragraph 70-08, *Construction Safety and Phasing Plan (CSPP)*.

When the contract work requires Contractor to work within an AOA of the airport on an intermittent basis (intermittent opening and closing of the AOA), Contractor shall maintain constant communications as specified; immediately obey all instructions to vacate the AOA; and immediately obey all instructions to resume work in such AOA. Failure to maintain the specified communications or to obey instructions shall be cause for suspension of Contractor's operations in the AOA until satisfactory conditions are provided. The areas of the AOA identified in the Construction Safety Phasing Plan (CSPP) and as listed below, cannot be closed to operating aircraft to permit Contractor's operations on a continuous basis and will therefore be closed to aircraft operations intermittently as shown in the CSPP.

Contractor shall be required to conform to safety standards contained in AC 150/5370-2, Operational Safety on Airports During Construction and the approved CSPP.

80-04.1 Operational safety on airport during construction. All Contractors' operations shall be conducted in accordance with the approved project Construction Safety and Phasing Plan (CSPP) and the Safety Plan Compliance Document (SPCD) and the provisions set forth within the current version of AC 150/5370-2, Operational Safety on Airports During Construction. The CSPP included within the contract documents conveys minimum requirements for operational safety on the airport during construction activities. Contractor shall prepare and submit a SPCD that details how it proposes to comply with the requirements presented within the CSPP.

Contractor shall implement all necessary safety plan measures prior to commencement of any work activity. Contractor shall conduct routine checks to assure compliance with the safety plan measures.

Contractor is responsible to Owner for the conduct of all subcontractors it employs on the project. Contractor shall assure that all subcontractors are made aware of the requirements of the CSPP and SPCD and that they implement and maintain all necessary measures.

No deviation or modifications may be made to the approved CSPP and SPCD unless approved in writing by Owner. The necessary coordination actions to review Contractor proposed modifications to an approved CSPP or approved SPCD can require a significant amount of time.

80-05 Character of workers, methods, and equipment. Contractor shall, at all times, employ sufficient labor and equipment for prosecuting the work to full completion in the manner and time required by the contract, plans, and specifications.

All workers shall have sufficient skill and experience to perform properly the work assigned to them. Workers engaged in special work or skilled work shall have sufficient experience in such work and in the operation of the equipment required to perform the work satisfactorily.

Any person employed by Contractor or by any subcontractor who violates any operational regulations or operational safety requirements and, in the opinion of RPR, does not perform his work in a proper and skillful manner or is intemperate or disorderly shall, at the written request of RPR, be removed immediately by Contractor or subcontractor employing such person, and shall not be employed again in any portion of the work without approval of RPR.

Should Contractor fail to remove such person or persons, or fail to furnish suitable and sufficient personnel for the proper execution of the work, RPR may suspend the work by written notice until compliance with such orders.

All equipment that is proposed to be used on the work shall be of sufficient size and in such mechanical condition as to meet requirements of the work and to produce a satisfactory quality of work. Equipment used on any portion of the work shall not cause injury to previously completed work, adjacent property, or existing airport facilities due to its use.

When the methods and equipment to be used by Contractor in accomplishing the work are not prescribed in the contract, Contractor is free to use any methods or equipment that will accomplish the work in conformity with the requirements of the contract, plans, and specifications.

When the contract specifies the use of certain methods and equipment, such methods and equipment shall be used unless otherwise authorized by RPR. If Contractor desires to use a method or type of equipment other than specified in the contract, Contractor may request authority from RPR to do so. The request shall be in writing and shall include a full description of the methods and equipment proposed and of the reasons for desiring to make the change. If approval is given, it will be on the condition that Contractor will be fully responsible for producing work in conformity with contract requirements. If, after trial use of the substituted methods or equipment, RPR determines that the work produced does not meet contract requirements, Contractor shall discontinue the use of the substitute method or equipment and shall complete the remaining work with the specified methods and equipment. Contractor shall remove any deficient work and replace it with work of specified quality, or take such other corrective action as RPR may direct. No change will be made in basis of payment for the contract items involved nor in contract time as a result of authorizing a change in methods or equipment under this paragraph.

80-06 Temporary suspension of the work. Owner shall have the authority to suspend the work wholly, or in part, for such period or periods Owner may deem necessary, due to unsuitable weather, or other conditions considered unfavorable for the execution of the work, or for such time necessary due to the failure on the part of Contractor to carry out orders given or perform any or all provisions of the contract.

In the event that Contractor is ordered by Owner, in writing, to suspend work for some unforeseen cause not otherwise provided for in the contract and over which Contractor has no control, Contractor may be reimbursed for actual money expended on the work during the period of shutdown. No allowance will be made for anticipated profits. The period of shutdown shall be computed from the effective date of the written order to suspend work to the effective date of the written order to resume the work. Claims for such compensation shall be filed with RPR within the time period stated in RPR's order to resume work. Contractor shall submit with their own claim information substantiating the amount shown on the claim. RPR will forward Contractor's claim to Owner for consideration in accordance with local laws or ordinances. No provision of this article shall be construed as entitling Contractor to compensation for delays due to inclement weather or for any other delay provided for in the contract, plans, or specifications.

If it becomes necessary to suspend work for an indefinite period, Contractor shall store all materials in such manner that they will not become an obstruction nor become damaged in any way. Contractor shall take

every precaution to prevent damage or deterioration of the work performed and provide for normal drainage of the work. Contractor shall erect temporary structures where necessary to provide for traffic on, to, or from the airport.

80-07 Determination and extension of contract time. The number of calendar days shall be stated in the proposal and contract and shall be known as the Contract Time.

If the contract time requires extension for reasons beyond Contractor's control, it shall be adjusted as follows:

80-07.1 **Contract time based on calendar days.** Contract Time based on calendar days shall consist of the number of calendar days stated in the contract counting from the effective date of the Notice to Proceed and including all Saturdays, Sundays, holidays, and non-workdays. All calendar days elapsing between the effective dates of Owner's orders to suspend and resume all work, due to causes not the fault of Contractor, shall be excluded.

At the time of final payment, the contract time shall be increased in the same proportion as the cost of the actually completed quantities bears to the cost of the originally estimated quantities in the proposal. Such increase in the contract time shall not consider either cost of work or the extension of contract time that has been covered by a change order or supplemental agreement. Charges against the contract time will cease as of the date of final acceptance. **]**

80-08 Failure to complete on time. For each calendar day or working day, as specified in the contract, that any work remains uncompleted after the contract time (including all extensions and adjustments as provided in paragraph 80-07, *Determination and Extension of Contract Time*) the sum specified in the contract and proposal as liquidated damages (LD) will be deducted from any money due or to become due Contractor or their own surety. Such deducted sums shall not be deducted as a penalty but shall be considered as liquidation of a reasonable portion of damages including but not limited to additional engineering services that will be incurred by Owner should Contractor fail to complete the work in the time provided in their contract.

Schedule	Liquidated Damages Cost	Allowed Construction Time
1	$1,000	90 days

The maximum construction time allowed is indicated in the plans. Permitting Contractor to continue and finish the work or any part of it after the time fixed for its completion, or after the date to which the time for completion may have been extended, will in no way operate as a wavier on the part of Owner of any of its rights under the contract.

80-09 Default and termination of contract. Contractor shall be considered in default of their contract and such default will be considered as cause for Owner to terminate the contract for any of the following reasons, if Contractor:

a. Fails to begin the work under the contract within the time specified in the Notice to Proceed, or

b. Fails to perform the work or fails to provide sufficient workers, equipment and/or materials to assure completion of work in accordance with the terms of the contract, or

c. Performs the work unsuitably or neglects or refuses to remove materials or to perform anew such work as may be rejected as unacceptable and unsuitable, or

d. Discontinues the execution of the work, or

e. Fails to resume work which has been discontinued within a reasonable time after notice to do so, or

f. Becomes insolvent or is declared bankrupt, or commits any act of bankruptcy or insolvency, or

g. Allows any final judgment to stand against Contractor unsatisfied for a period of 10 days, or

h. Makes an assignment for the benefit of creditors, or

i. For any other cause whatsoever, fails to carry on the work in an acceptable manner.

Should Owner consider Contractor in default of the contract for any reason above, Owner shall immediately give written notice to Contractor and Contractor's surety as to the reasons for considering Contractor in default and Owner's intentions to terminate the contract.

If Contractor or surety, within a period of 10 days after such notice, does not proceed in accordance therewith, then Owner will, upon written notification from RPR of the facts of such delay, neglect, or default and Contractor's failure to comply with such notice, have full power and authority without violating the contract, to take the execution of the work out of the hands of Contractor. Owner may appropriate or use any or all materials and equipment that have been mobilized for use in the work and are acceptable and may enter into an agreement for the completion of said contract according to the terms and provisions thereof, or use such other methods as in the opinion of RPR will be required for the completion of said contract in an acceptable manner.

All costs and charges incurred by Owner, together with the cost of completing the work under contract, will be deducted from any monies due or which may become due Contractor. If such expense exceeds the sum which would have been payable under the contract, then Contractor and the surety shall be liable and shall pay to Owner the amount of such excess.

80-10 Termination for national emergencies. Owner shall terminate the contract or portion thereof by written notice when Contractor is prevented from proceeding with the construction contract as a direct result of an Executive Order of the President with respect to the execution of war or in the interest of national defense.

When the contract, or any portion thereof, is terminated before completion of all items of work in the contract, payment will be made for the actual number of units or items of work completed at the contract price or as mutually agreed for items of work partially completed or not started. No claims or loss of anticipated profits shall be considered.

Reimbursement for organization of the work, and other overhead expenses, (when not otherwise included in the contract) and moving equipment and materials to and from the job will be considered, the intent being that an equitable settlement will be made with Contractor.

Acceptable materials, obtained or ordered by Contractor for the work and that are not incorporated in the work shall, at the option of Contractor, be purchased from Contractor at actual cost as shown by receipted bills and actual cost records at such points of delivery as may be designated by RPR.

Termination of the contract or a portion thereof shall neither relieve Contractor of their responsibilities for the completed work nor shall it relieve their surety of its obligation for and concerning any just claim arising out of the work performed.

80-11 Work area, storage area and sequence of operations. Contractor shall obtain approval from RPR prior to beginning any work in all areas of the airport. No operating runway, taxiway, or air operations area (AOA) shall be crossed, entered, or obstructed while it is operational. Contractor shall plan and coordinate work in accordance with the approved CSPP and SPCD.

END OF SECTION 80

Section 90 Measurement and Payment

90-01 Measurement of quantities. All work completed under the contract will be measured by RPR, or their authorized representatives, using United States Customary Units of Measurement.

The method of measurement and computations to be used in determination of quantities of material furnished and of work performed under the contract will be those methods generally recognized as conforming to good engineering practice.

Unless otherwise specified, longitudinal measurements for area computations will be made horizontally, and no deductions will be made for individual fixtures (or leave-outs) having an area of 9 square feet or less. Unless otherwise specified, transverse measurements for area computations will be the neat dimensions shown on the plans or ordered in writing by RPR.

Unless otherwise specified, all contract items which are measured by the linear foot such as electrical ducts, conduits, pipe culverts, underdrains, and similar items shall be measured parallel to the base or foundation upon which such items are placed.

The term "lump sum" when used as an item of payment will mean complete payment for the work described in the contract. When a complete structure or structural unit (in effect, "lump sum" work) is specified as the unit of measurement, the unit will be construed to include all necessary fittings and accessories.

When requested by Contractor and approved by RPR in writing, material specified to be measured by the cubic yard (cubic meter) may be weighed, and such weights will be converted to cubic yards (cubic meters) for payment purposes. Factors for conversion from weight measurement to volume measurement will be determined by RPR and shall be agreed to by Contractor before such method of measurement of pay quantities is used.

Measurement and Payment Terms

Term	Description
Excavation and Embankment Volume	In computing volumes of excavation, the average end area method will be used unless otherwise specified.
Measurement and Proportion by Weight	"Ton" will mean the short ton consisting of 2,000 pounds avoirdupois. All materials that are measured or proportioned by weights shall be weighed on accurate, independently certified scales by competent, qualified personnel at locations designated by RPR. If material is shipped by rail, the car weight may be accepted provided that only the actual weight of material is paid for. However, car weights will not be acceptable for material to be passed through mixing plants. Trucks used to haul material being paid for by weight shall be weighed empty daily at such times as RPR directs, and each truck shall bear a plainly legible identification mark.
Measurement by Volume	Materials to be measured by volume in the hauling vehicle shall be hauled in approved vehicles and measured therein at the point of delivery. Vehicles for this purpose may be of any size or type acceptable for the materials hauled, provided that the body is of such shape that the actual contents may be readily and accurately determined. All vehicles shall be loaded to at least their water level capacity, and all loads shall be leveled when the vehicles arrive at the point of delivery.

Term	Description
Asphalt Material	Asphalt materials will be measured by the gallon or ton. When measured by volume, such volumes will be measured at 60°F or will be corrected to the volume at 60°F using ASTM D1250 for asphalts. Net certified scale weights or weights based on certified volumes in the case of rail shipments will be used as a basis of measurement, subject to correction when asphalt material has been lost from the car or the distributor, wasted, or otherwise not incorporated in the work. When asphalt materials are shipped by truck or transport, net certified weights by volume, subject to correction for loss or foaming, will be used for computing quantities.
Cement	Cement will be measured by the ton or hundredweight.
Structure	Structures will be measured according to neat lines shown on the plans or as altered to fit field conditions.
Timber	Timber will be measured by the thousand feet board measure (MFBM) actually incorporated in the structure. Measurement will be based on nominal widths and thicknesses and the extreme length of each piece.
Plates and Sheets	The thickness of plates and galvanized sheet used in the manufacture of corrugated metal pipe, metal plate pipe culverts and arches, and metal cribbing will be specified and measured in decimal fraction of inch.
Miscellaneous Items	When standard manufactured items are specified such as fence, wire, plates, rolled shapes, pipe conduit, etc., and these items are identified by gauge, unit weight, section dimensions, etc., such identification will be nominal weights or dimensions. Unless more stringently controlled by tolerances in cited specifications, manufacturing tolerances established by the industries involved will be accepted.
Scales	Scales must be tested for accuracy and serviced before use. Scales for weighing materials which are required to be proportioned or measured and paid for by weight shall be furnished, erected, and maintained by Contractor, or be certified permanently installed commercial scales. Platform scales shall be installed and maintained with the platform level and rigid bulkheads at each end. Scales shall be accurate within 0.5% of the correct weight throughout the range of use. Contractor shall have the scales checked under the observation of RPR before beginning work and at such other times as requested. The intervals shall be uniform in spacing throughout the graduated or marked length of the beam or dial and shall not exceed 0.1% of the nominal rated capacity of the scale, but not less than one pound (454 grams). The use of spring balances will not be permitted. In the event inspection reveals the scales have been “overweighing” (indicating more than correct weight) they will be immediately adjusted. All materials received subsequent to the last previous correct weighting-accuracy test will be reduced by the percentage of error in excess of 0.5%. In the event inspection reveals the scales have been under-weighing (indicating less than correct weight), they shall be immediately adjusted. No additional payment to Contractor will be allowed for materials previously weighed and recorded. Beams, dials, platforms, and other scale equipment shall be so arranged that the operator and RPR can safely and conveniently view them. Scale installations shall have available ten standard 50-pound (2.3 km) weights for testing the weighing equipment or suitable weights and devices for other approved equipment. All costs in connection with furnishing, installing, certifying, testing, and maintaining scales; for furnishing check weights and scale house; and for all other items specified in this subsection, for the weighing of materials for proportioning or payment, shall be included in the unit contract prices for the various items of the project.

Term	Description
Rental Equipment	Rental of equipment will be measured by time in hours of actual working time and necessary traveling time of the equipment within the limits of the work. Special equipment ordered in connection with extra work will be measured as agreed in the change order or supplemental agreement authorizing such work as provided in paragraph 90-05 *Payment for Extra Work*.
Pay Quantities	When the estimated quantities for a specific portion of the work are designated as the pay quantities in the contract, they shall be the final quantities for which payment for such specific portion of the work will be made, unless the dimensions of said portions of the work shown on the plans are revised by RPR. If revised dimensions result in an increase or decrease in the quantities of such work, the final quantities for payment will be revised in the amount represented by the authorized changes in the dimensions.

90-02 Scope of payment. Contractor shall receive and accept compensation provided for in the contract as full payment for furnishing all materials, for performing all work under the contract in a complete and acceptable manner, and for all risk, loss, damage, or expense of whatever character arising out of the nature of the work or the execution thereof, subject to the provisions of Section 70, paragraph 70-18, *No Waiver of Legal Rights*.

When the "basis of payment" subsection of a technical specification requires that the contract price (price bid) include compensation for certain work or material essential to the item, this same work or material will not also be measured for payment under any other contract item which may appear elsewhere in the contract, plans, or specifications.

90-03 Compensation for altered quantities. When the accepted quantities of work vary from the quantities in the proposal, Contractor shall accept as payment in full, so far as contract items are concerned, payment at the original contract price for the accepted quantities of work actually completed and accepted. No allowance, except as provided for in Section 40, paragraph 40-02, *Alteration of Work and Quantities,* will be made for any increased expense, loss of expected reimbursement, or loss of anticipated profits suffered or claimed by Contractor which results directly from such alterations or indirectly from their own unbalanced allocation of overhead and profit among the contract items, or from any other cause.

90-04 Payment for omitted items. As specified in Section 40, paragraph 40-03, *Omitted Items,* RPR shall have the right to omit from the work (order nonperformance) any contract item, except major contract items, in the best interest of Owner.

Should RPR omit or order nonperformance of a contract item or portion of such item from the work, Contractor shall accept payment in full at the contract prices for any work actually completed and acceptable prior to RPR's order to omit or non-perform such contract item.

Acceptable materials ordered by Contractor or delivered on the work prior to the date of RPR's order will be paid for at the actual cost to Contractor and shall thereupon become the property of Owner.

In addition to the reimbursement hereinbefore provided, Contractor shall be reimbursed for all actual costs incurred for the purpose of performing the omitted contract item prior to the date of RPR's order. Such additional costs incurred by Contractor must be directly related to the deleted contract item and shall be supported by certified statements by Contractor as to the nature the amount of such costs.

90-05 Payment for extra work. Extra work, performed in accordance with Section 40, paragraph 40-04, *Extra Work*, will be paid for at the contract prices or agreed prices specified in the change order or supplemental agreement authorizing the extra work.

90-06 Partial payments. Partial payments will be made to Contractor at least once each month as the work progresses. Said payments will be based upon estimates, prepared by RPR, of the value of the work performed and materials complete and in place, in accordance with the contract, plans, and specifications.

Such partial payments may also include the delivered actual cost of those materials stockpiled and stored in accordance with paragraph 90-07, *Payment for Materials on Hand*. No partial payment will be made when the amount due to Contractor since the last estimate amounts to less than five hundred dollars.

a. From the total of the amount determined to be payable on a partial payment, 5% of such total amount will be deducted and retained by the Owner for protection of the Owner's interests. Unless otherwise instructed by Owner, amount retained by Owner will be in effect until the final payment is made except as follows:
   (1) Contractor may request release of retainage on work that has been partially accepted by Owner in accordance with Section 50-03. Contractor must provide a certified invoice to RPR that supports the value of retainage held by the Owner for partially accepted work.
   (2) In lieu of retainage, Contractor may exercise at its option the establishment of an escrow account per paragraph 90-08.

b. Contractor is required to pay all subcontractors for satisfactory performance of their contracts no later than 30 days after the Contractor has received a partial payment. Contractor must provide the Owner evidence of prompt and full payment of retainage held by prime Contractor to the subcontractor within 30 days after the subcontractor's work is satisfactorily completed. A subcontractor's work is satisfactorily completed when all the tasks called for in the subcontract have been accomplished and documented as required by the Owner. When the Owner has made an incremental acceptance of a portion of a prime contract, the work of a subcontractor covered by that acceptance is deemed to be satisfactorily completed.

c. When at least 95% of the work has been completed to the satisfaction of RPR, RPR shall, at Owner's discretion and with the consent of the surety, prepare estimates of both the contract value and the cost of the remaining work to be done. Owner may retain an amount not less than twice the contract value or estimated cost, whichever is greater, of the work remaining to be done. The remainder, less all previous payments and deductions, will then be certified for payment to the Contractor.

It is understood and agreed that Contractor shall not be entitled to demand or receive partial payment based on quantities of work in excess of those provided in the proposal or covered by approved change orders or supplemental agreements, except when such excess quantities have been determined by RPR to be a part of the final quantity for the item of work in question.

No partial payment shall bind Owner to the acceptance of any materials or work in place as to quality or quantity. All partial payments are subject to correction at the time of final payment as provided in paragraph 90-09, *Acceptance and Final Payment*.

Contractor shall deliver to Owner a complete release of all claims for labor and material arising out of this contract before the final payment is made. If any subcontractor or supplier fails to furnish such a release in full, Contractor may furnish a bond or other collateral satisfactory to Owner to indemnify Owner against any potential lien or other such claim. The bond or collateral shall include all costs, expenses, and attorney fees Owner may be compelled to pay in discharging any such lien or claim.

90-07 Payment for materials on hand. Partial payments may be made to the extent of the delivered cost of materials to be incorporated in the work, provided that such materials meet the requirements of the contract, plans, and specifications and are delivered to acceptable sites on the airport property or at other sites in the vicinity that are acceptable to Owner. Such delivered costs of stored or stockpiled materials may be included in the next partial payment after the following conditions are met:

a. The material has been stored or stockpiled in a manner acceptable to RPR at or on an approved site.

b. Contractor has furnished RPR with acceptable evidence of the quantity and quality of such stored or stockpiled materials.

c. Contractor has furnished RPR with satisfactory evidence that the material and transportation costs have been paid.

d. Contractor has furnished Owner legal title (free of liens or encumbrances of any kind) to the material stored or stockpiled.

e. Contractor has furnished Owner evidence that the material stored or stockpiled is insured against loss by damage to or disappearance of such materials at any time prior to use in the work.

It is understood and agreed that the transfer of title and Owner's payment for such stored or stockpiled materials shall in no way relieve Contractor of their responsibility for furnishing and placing such materials in accordance with the requirements of the contract, plans, and specifications.

In no case will the amount of partial payments for materials on hand exceed the contract price for such materials or the contract price for the contract item in which the material is intended to be used.

No partial payment will be made for stored or stockpiled living or perishable plant materials.

Contractor shall bear all costs associated with the partial payment of stored or stockpiled materials in accordance with the provisions of this paragraph.

90-08 Payment of withheld funds. At Contractor's option, if an Owner withholds retainage in accordance with the methods described in paragraph 90-06 *Partial Payments*, Contractor may request that Owner deposit the retainage into an escrow account. Owner's deposit of retainage into an escrow account is subject to the following conditions:

a. Contractor shall bear all expenses of establishing and maintaining an escrow account and escrow agreement acceptable to Owner.

b. Contractor shall deposit to and maintain in such escrow only those securities or bank certificates of deposit as are acceptable to Owner and having a value not less than the retainage that would otherwise be withheld from partial payment.

c. Contractor shall enter into an escrow agreement satisfactory to Owner.

d. Contractor shall obtain the written consent of the surety to such agreement.

90-09 Acceptance and final payment. When the contract work has been accepted in accordance with the requirements of Section 50, paragraph 50-15, *Final Acceptance*, RPR will prepare the final estimate of the items of work actually performed. Contractor shall approve RPR's final estimate or advise RPR of Contractor's objections to the final estimate which are based on disputes in measurements or computations of the final quantities to be paid under the contract as amended by change order or supplemental agreement. Contractor and RPR shall resolve all disputes (if any) in the measurement and computation of final quantities to be paid within 30 calendar days of Contractor's receipt of RPR's final estimate. If, after such 30-day period, a dispute still exists, Contractor may approve RPR's estimate under protest of the quantities in dispute, and such disputed quantities shall be considered by Owner as a claim in accordance with Section 50, paragraph 50-16, *Claims for Adjustment and Disputes*.

After Contractor has approved, or approved under protest, RPR's final estimate, and after RPR's receipt of the project closeout documentation required in paragraph 90-11, *Contractor Final Project Documentation*, final payment will be processed based on the entire sum, or the undisputed sum in case of approval under protest, determined to be due Contractor less all previous payments and all amounts to be deducted under the provisions of the contract. All prior partial estimates and payments shall be subject to correction in the final estimate and payment.

If Contractor has filed a claim for additional compensation under the provisions of Section 50, paragraph 50-16, *Claims for Adjustments and Disputes,* or under the provisions of this paragraph, such claims will be considered by Owner in accordance with local laws or ordinances. Upon final adjudication of such claims,

any additional payment determined to be due Contractor will be paid pursuant to a supplemental final estimate.

90-10 Construction warranty.

a. In addition to any other warranties in this contract, Contractor warrants that work performed under this contract conforms to the contract requirements and is free of any defect in equipment, material, workmanship, or design furnished, or performed by Contractor or any subcontractor or supplier at any tier.

b. This warranty shall continue for a period of one year from the date of final acceptance of the work, except as noted. If Owner takes possession of any part of the work before final acceptance, this warranty shall continue for a period of one year from the date Owner takes possession.

c. Contractor shall remedy at Contractor's expense any failure to conform, or any defect. In addition, Contractor shall remedy at Contractor's expense any damage to Owner real or personal property, when that damage is the result of Contractor's failure to conform to contract requirements; or any defect of equipment, material, workmanship, or design furnished by Contractor.

d. Contractor shall restore any work damaged in fulfilling the terms and conditions of this clause. Contractor's warranty with respect to work repaired or replaced will run for one year from the date of repair or replacement.

e. Owner will notify Contractor, in writing, within seven days after the discovery of any failure, defect, or damage.

f. If Contractor fails to remedy any failure, defect, or damage within 14 days after receipt of notice, Owner shall have the right to replace, repair, or otherwise remedy the failure, defect, or damage at Contractor's expense.

g. With respect to all warranties, express or implied, from subcontractors, manufacturers, or suppliers for work performed and materials furnished under this contract, Contractor shall: (1) Obtain all warranties that would be given in normal commercial practice; (2) Require all warranties to be executed, in writing, for the benefit of Owner, as directed by Owner, and (3) Enforce all warranties for the benefit of Owner.

h. This warranty shall not limit Owner's rights with respect to latent defects, gross mistakes, or fraud.

90-11 Contractor Final Project Documentation. Approval of final payment to Contractor is contingent upon completion and submittal of the items listed below. The final payment will not be approved until RPR approves Contractor's final submittal. Contractor shall:

a. Provide two copies of all manufacturer warranties specified for materials, equipment, and installations.

b. Provide weekly payroll records (not previously received) from the general Contractor and all subcontractors.

c. Complete final cleanup in accordance with Section 40, paragraph 40-08, *Final Cleanup*.

d. Complete all punch list items identified during the Final Inspection.

e. Provide complete release of all claims for labor and material arising out of the Contract.

f. Provide a certified statement signed by the subcontractors, indicating actual amounts paid to the Disadvantaged Business Enterprise (DBE) subcontractors and/or suppliers associated with the project.

g. When applicable per state requirements, return copies of sales tax completion forms.

h. Manufacturer's certifications for all items incorporated in the work.

i. All required record drawings, as-built drawings or as-constructed drawings.

j. Project Operation and Maintenance (O&M) Manual(s).

k. Security for Construction Warranty.

l. Equipment commissioning documentation submitted, if required.

END OF SECTION 90

Item C-100 Contractor Quality Control Program (CQCP)

100-1 General. Quality is more than test results. Quality is the combination of proper materials, testing, workmanship, equipment, inspection, and documentation of the project. Establishing and maintaining a culture of quality is key to achieving a quality project. Contractor shall establish, provide, and maintain an effective Contractor Quality Control Program (CQCP) that details the methods and procedures that will be taken to assure that all materials and completed construction required by this contract conform to contract plans, technical specifications, and other requirements, whether manufactured by Contractor, or procured from subcontractors or vendors. Although guidelines are established and certain minimum requirements are specified here and elsewhere in the contract technical specifications, Contractor shall assume full responsibility for accomplishing the stated purpose.

Contractor shall establish a CQCP that will:

a. Provide qualified personnel to develop and implement the CQCP.

b. Provide to produce acceptable quality materials.

c. Provide sufficient information to assure that the specification requirements can be met.

d. Document the CQCP process.

Contractor shall not begin any construction or production of materials to be incorporated into the completed work until CQCP is reviewed and approved by Engineer and until Preconstruction Conference is complete. If CQCP is not submitted and approved by Preconstruction Conference, Notice to Proceed (NTP) will still be issued at the Preconstruction Conference and contract time will commence. Contractor will be able to begin construction on items not pertaining to CQCP. No partial payment will be made for materials subject to specific quality control (QC) requirements if installed before CQCP has been reviewed and approved.

QC requirements contained in this section and elsewhere in the contract technical specifications are in addition to and separate from the quality assurance (QA) testing requirements. QA testing requirements are the responsibility of Engineer or Contractor as specified in the specifications.

A Quality Control (QC)/Quality Assurance (QA) workshop with Engineer, RPR, Contractor, subcontractors, testing laboratories, and Owner's representative will be held–in conjunction with Preconstruction Conference. QC/QA workshop will be facilitated by Contractor with participation by all required CQCP personnel. Items to be addressed, at a minimum, will include:

a. Review of CQCP including submittals, QC Testing, Action & Suspension Limits for Production, Corrective Action Plans, Distribution of QC reports, and Control Charts.

b. Discussion of QA program.

c. Discussion of QC and QA Organization and authority including coordination and information exchange between QC and QA.

d. Establish regular meetings to discuss control of materials, methods, and testing.

e. Establishment of the overall QC culture.

100-2 Description of program.

a. General description. Contractor shall establish a CQCP to perform QC inspection and testing of all items of work required by the technical specifications, including those performed by subcontractors. CQCP shall ensure conformance to applicable specifications and plans with respect to materials, off-site

fabrication, workmanship, construction, finish, and functional performance. CQCP shall be effective for control of all construction work performed under this Contract and shall specifically include surveillance and tests required by the technical specifications, in addition to other requirements of this section and any other activities deemed necessary by Contractor to establish an effective level of QC.

b. Contractor Quality Control Program (CQCP). Contractor shall describe CQCP in a written document that shall be reviewed and approved by Engineer prior to Preconstruction Conference~~,~~. The written CQCP shall be submitted to the Engineer for review and approval at least 14 calendar days before the Preconstruction Conference. Contractor's CQCP and QC testing laboratory must be approved in writing by Engineer prior to the Notice to Proceed (NTP).

CQCP shall be organized to address, as a minimum, the following:

1. QC organization and resumes of key staff
2. Project progress schedule
3. Submittal schedule
4. Inspection requirements
5. QC testing plan
6. Documentation of QC activities and distribution of QC reports
7. Requirements for corrective action when QC and/or QA acceptance criteria are not met
8. Material quality and construction means and methods. Address all elements applicable to the project that affect the quality of the pavement structure including subgrade, subbase, base, and surface course. Some elements that must be addressed include, but is not limited to mix design, aggregate grading, stockpile management, mixing and transporting, placing, and finishing, quality control testing and inspection, smoothness, laydown plan, equipment, and temperature management plan.

Contractor must add any additional elements to CQCP necessary to adequately control all production/construction processes required by this contract.

100-3 CQCP organization. CQCP shall be implemented by the establishment of a QC organization. An organizational chart shall be developed to show all QC personnel, their authority, and how these personnel integrate with other management/production and construction functions and personnel.

The organizational chart shall identify all QC staff by name and function and shall indicate the total staff required to implement all elements of CQCP, including inspection and testing for each item of work. If necessary, different technicians can be used for specific inspection and testing functions for different items of work. If an outside organization or independent testing laboratory is used for implementation of all or part of CQCP, the personnel assigned shall be subject to the qualification requirements of paragraphs 100-03a and 100-03b. The organizational chart shall indicate which personnel are Contractor employees and which are provided by an outside organization.

QC organization shall, as a minimum, consist of the following personnel:

a. Program Administrator. Contractor Quality Control Program Administrator (CQCPA) must be a full-time employee of Contractor, or a consultant engaged by Contractor. CQCPA must have a minimum five years of experience in QC pavement construction with prior QC experience on a project of comparable size and scope as the contract.

Included in the five years of paving/QC experience, CQCPA must meet at least one of the following requirements:

(1) Professional Engineer with one year of airport paving experience.

(2) Engineer-in-training with two years of airport paving experience.

(3) National Institute for Certification in Engineering Technologies (NICET) Civil Engineering Technology Level IV with three years of airport paving experience.

(4) Individual with four years of airport paving experience, with a Bachelor of Science Degree in Civil Engineering, Civil Engineering Technology or Construction.

CQCPA must have full authority to institute any actions necessary for the successful implementation of the CQCP to ensure compliance with the contract plans and technical specifications. CQCPA authority must include the ability to immediately stop production until materials and/or processes are in compliance with contract specifications. CQCPA must report directly to a principal officer of the construction firm. CQCPA may supervise the Quality Control Program on more than one project if person can be at the job site within two hours after being notified of a problem.

b. QC technicians. Enough QC technicians necessary to adequately implement the CQCP must be provided. These personnel must be Engineers, engineering technicians, or experienced craftsman with qualifications in the appropriate field equivalent to NICET Level II in Civil Engineering Technology or higher and have a minimum two years of experience in their area of expertise.

QC technicians must report directly to CQCPA and perform the following functions:

(1) Inspection of all materials, construction, plant, and equipment for conformance to the technical specifications, and as required by paragraph 100-6.

(2) Performance of all QC tests as required by the technical specifications and paragraph100-8.

(3) Performance of tests for Engineer when required by the technical specifications.

Certification at an equivalent level of qualification and experience by a state or nationally recognized organization will be acceptable in lieu of NICET certification.

c. Staffing levels. Contractor shall provide sufficient qualified QC personnel to always monitor each work activity. Where material is being produced in a plant for incorporation into the work, separate plant and field technicians shall be provided at each plant and field placement location. The scheduling and coordinating of all inspection and testing must match the type and pace of work activity. CQCP shall state where different technicians will be required for different work elements.

100-4 Project progress schedule. Critical QC activities must be shown on the project schedule as required by Section 80, paragraph 80-03, *Execution and Progress*.

100-5 Submittals schedule. Contractor shall submit a detailed listing of all submittals (for example, mix designs, material certifications) and shop drawings required by the technical specifications. The listing can be developed in a spreadsheet format and shall include as a minimum:

a. Specification item number

b. Item description

c. Description of submittal

d. Specification paragraph requiring submittal

e. Scheduled date of submittal

100-6 Inspection requirements. QC inspection functions shall be organized to provide inspections for all definable features of work, as detailed herein. All inspections shall be documented by Contractor as specified by paragraph 100-9.

Inspections shall be performed as needed to ensure continuing compliance with contract requirements until completion of the particular feature of work. Inspections shall include the following minimum requirements:

a. During plant operation for material production, QC test results and periodic inspections shall be used to ensure the quality of aggregates and other mix components, and to adjust and control mix proportioning to meet the approved mix design and other requirements of the technical specifications. All equipment used in proportioning and mixing shall be inspected to ensure its proper operating condition. CQCP shall detail how these and other QC functions will be accomplished and used.

b. During field operations, QC test results and periodic inspections shall be used to ensure the quality of all materials and workmanship. All equipment used in placing, finishing, and compacting shall be inspected to ensure its proper operating condition and to ensure that all such operations are in conformance to the technical specifications and are within the plan dimensions, lines, grades, and tolerances specified. CQCP shall document how these and other QC functions will be accomplished and used.

100-7 Contractor QC testing facility.

a. For projects that include Items P-401, P-403, and P-404, Contractor shall ensure facilities, including all necessary equipment, materials, and current reference standards, are provided that meet requirements in the following paragraphs of ASTM D3666, *Standard Specification for Minimum Requirements for Agencies Testing and Inspecting Road and Paving Materials*:

- 8.1.3 Equipment Calibration and Checks;
- 8.1.9 Equipment Calibration, Standardization, and Check Records;
- 8.1.12 Test Methods and Procedures

b. For projects that include P-501, Contractor shall ensure facilities, including all necessary equipment, materials, and current reference standards, are provided that meet requirements in the following paragraphs of ASTM C1077, Standard Practice for Agencies Testing Concrete and Concrete Aggregates for Use in Construction and Criteria for Testing Agency Evaluation:

- 7 Test Methods and Procedures
- 8 Facilities, Equipment, and Supplemental Procedures

100-8 QC testing plan. As a part of the overall CQCP, Contractor shall implement a QC testing plan, as required by the technical specifications. Testing plan shall include the minimum tests and test frequencies required by each technical specification Item, as well as any additional QC tests that Contractor deems necessary to adequately control production and/or construction processes.

QC testing plan can be developed in a spreadsheet fashion and shall, as a minimum, include the following:

a. Specification item number (e.g., P-401)

b. Item description (e.g., Hot Mix Asphalt Pavements)

c. Test type (e.g., gradation, grade, asphalt content)

d. Test standard (e.g., ASTM or American Association of State Highway and Transportation Officials (AASHTO) test number, as applicable)

e. Test frequency (e.g., as required by technical specifications or minimum frequency when requirements are not stated)

f. Responsibility (e.g., plant technician)

g. Control requirements (e.g., target, permissible deviations)

QC testing plan shall contain a statistically based procedure of random sampling for acquiring test samples in accordance with ASTM D3665. RPR shall be provided the opportunity to witness QC sampling and testing.

All QC test results shall be documented by Contractor as required by paragraph 100-9.

100-9 Documentation. Contractor shall maintain current QC records of all inspections and tests performed. These records shall include factual evidence that the required QC inspections or tests have been performed, including type and number of inspections or tests involved; results of inspections or tests; nature of defects, deviations, causes for rejection, etc.; proposed remedial action; and corrective actions taken.

These records must cover both conforming and defective or deficient features and must include a statement that all supplies and materials incorporated in the work are in full compliance with the terms of the contract. Legible copies of these records shall be furnished to RPR daily. The records shall cover all work placed after the previously furnished records and shall be verified and signed by the CQCPA.

Contractor QC records required for contract shall include but not necessarily limited to:

a. Daily inspection reports. Each Contractor QC technician shall maintain a daily log of all inspections performed for both Contractor and subcontractor operations. These technician's daily reports shall provide factual evidence that continuous QC inspections have been performed and shall, as a minimum, include:

(1) Technical specification item number and description

(2) Compliance with approved submittals

(3) Proper storage of materials and equipment

(4) Proper operation of all equipment

(5) Adherence to plans and technical specifications

(6) Summary of any necessary corrective actions

(7) Safety inspection.

(8) Photographs.

Daily inspection reports shall identify all QC inspections and QC tests conducted, results of inspections, location and nature of defects found, causes for rejection, and remedial or corrective actions taken or proposed.

Daily inspection reports shall be signed by the responsible QC technician and the CQCPA. RPR shall be provided at least one copy of each daily inspection report on the workday following the day of record. When QC inspection and test results are recorded and transmitted electronically, the results must be archived.

b. Daily test reports. Contractor shall be responsible for establishing a system that will record all QC test results. Daily test reports shall document the following information:

(1) Technical specification item number and description

(2) Test designation

(3) Location

(4) Date of test

(5) Control requirements

(6) Test results

(7) Causes for rejection

(8) Recommended remedial actions

(9) Retests

Test results from each day's work period shall be submitted to RPR prior to the start of the next day's work period. When required by the technical specifications, Contractor shall maintain statistical QC charts. When QC daily test results are recorded and transmitted electronically, the results must be archived.

100-10 Corrective action requirements. CQCP shall indicate the appropriate action to be taken when a process is deemed, or believed, to be out of control (out of tolerance) and detail what action will be taken

PACKET 10.164 July 11, 2023

to bring the process into control. Requirements for corrective action shall include both general requirements for operation of the CQCP, and for individual items of work contained in the technical specifications.

CQCP shall detail how the results of QC inspections and tests will be used for determining the need for corrective action and shall contain clear rules to gauge when a process is out of control and the type of correction to be taken to regain process control.

When applicable or required by technical specifications, Contractor shall establish and use statistical QC charts for individual QC tests. Requirements for corrective action shall be linked to the control charts.

100-11 Inspection/observations by RPR. All items of material and equipment are subject to inspection/observation by RPR at the point of production, manufacture, or shipment to determine if Contractor, producer, manufacturer, or shipper maintains an adequate QC system in conformance with the requirements detailed here and the applicable technical specifications and plans. In addition, all items of materials, equipment and work in place shall be subject to inspection and/or observation by RPR at the site for the same purpose.

Inspection/observations by RPR does not relieve Contractor of performing QC inspections of either on-site or off-site Contractor's or subcontractor's work.

100-12 Noncompliance.

a. Engineer will provide written notice to Contractor of any noncompliance with their CQCP. After receipt of such notice, Contractor must take corrective action.

b. When QC activities do not comply with either CQCP or contract provisions or when Contractor fails to properly operate and maintain an effective CQCP, and no effective corrective actions have been taken after notification of non-compliance, Engineer will recommend Owner take the following actions:

(1) Order Contractor to replace ineffective or unqualified QC personnel or subcontractors and/or

(2) Order Contractor to stop operations until appropriate corrective actions are taken.

METHOD OF MEASUREMENT

100-13 Basis of measurement and payment. Contractor Quality Control Program (CQCP) is for the personnel, tests, facilities, and documentation required to implement the CQCP. CQCP will be paid as a lump sum with the following schedule of partial payments:

a. With first pay request, 25% with approval of CQCP and completion of the Quality Control (QC)/Quality Assurance (QA) workshop.

b. When 25% or more of the original contract is earned, an additional 25%.

c. When 50% or more of the original contract is earned, an additional 20%.

d. When 75% or more of the original contract is earned, an additional 20%

e. After final inspection and acceptance of project, the final 10%.

BASIS OF PAYMENT

100-14 Payment will be made under:

Item C-100 Contractor Quality Control Program (CQCP), per lump sum

PACKET 10.165 July 11, 2023

REFERENCES

The publications listed below form a part of this specification to the extent referenced. The publications are referred to within the text by the basic designation only.

National Institute for Certification in Engineering Technologies (NICET)

ASTM International (ASTM)

ASTM C1077	Standard Practice for Agencies Testing Concrete and Concrete Aggregates for Use in Construction and Criteria for Testing Agency Evaluation
ASTM D3665	Standard Practice for Random Sampling of Construction Materials
ASTM D3666	Standard Specification for Minimum Requirements for Agencies Testing and Inspecting Road and Paving Materials

END OF ITEM C-100

Item C-102 Temporary Air and Water Pollution, Soil Erosion, and Siltation Control

DESCRIPTION

102-1. This item shall consist of temporary control measures as shown on the plans or as ordered by Resident Project Representative (RPR) during the life of a contract to control pollution of air and water, soil erosion, and siltation using silt fences, berms, dikes, dams, sediment basins, fiber mats, gravel, mulches, grasses, slope drains, and other erosion control devices or methods.

Temporary erosion control shall be in accordance with the approved erosion control plan; the approved Construction Safety and Phasing Plan (CSPP) and, AC 150/5370-2, *Operational Safety on Airports During Construction*. The temporary erosion control measures contained herein shall be coordinated with the permanent erosion control measures specified as part of this contract to the extent practical to assure economical, effective, and continuous erosion control throughout the construction period.

Temporary control may include work outside the construction limits such as borrow pit operations, equipment and material storage sites, waste areas, and temporary plant sites.

Temporary control measures shall be designed, installed, and maintained to minimize the creation of wildlife attractants that have the potential to attract hazardous wildlife on or near public-use airports.

MATERIALS

102-2.1 Grass. Grass that will not compete with the grasses sown later for permanent cover per Item T-901shall be a quick-growing species (such as ryegrass, Italian ryegrass, or cereal grasses) suitable to the area providing a temporary cover. Selected grass species shall not create a wildlife attractant.

102-2.2 Mulches. Mulches may be hay, straw, fiber mats, netting, bark, wood chips, or other suitable material reasonably clean and free of noxious weeds and deleterious materials per Item T-908. Mulches shall not create a wildlife attractant.

102-2.3 Fertilizer. Fertilizer shall be a standard commercial grade and shall conform to all federal and state regulations and to the standards of the Association of Official Agricultural Chemists.

102-2.4 Slope drains. Slope drains may be constructed of pipe, fiber mats, rubble, concrete, asphalt, or other materials that will adequately control erosion.

102-2.5 Silt fence. Silt fence shall consist of polymeric filaments which are formed into a stable network such that filaments retain their relative positions. Synthetic filter fabric shall contain ultraviolet ray inhibitors and stabilizers to provide a minimum of six months of expected usable construction life. Silt fence shall meet the requirements of ASTM D6461.

102-2.6 Other. All other materials shall meet commercial grade standards and shall be approved by Engineer before being incorporated into the project.

CONSTRUCTION REQUIREMENTS

102-3.1 General. In the event of conflict between these requirements and pollution control laws, rules, or regulations of other federal, state, or local agencies, the more restrictive laws, rules, or regulations shall apply.

Contractor shall be responsible for assuring compliance to the extent that construction practices, construction operations, and construction work are involved.

102-3.2 Schedule. Prior to the start of construction, Contractor shall submit schedules in accordance with the approved Construction Safety and Phasing Plan (CSPP) and the plans for accomplishment of temporary and permanent erosion control work for clearing and grubbing; grading; construction; paving; and structures at watercourses. Contractor shall also submit a proposed method of erosion and dust control on haul roads and borrow pits and a plan for disposal of waste materials. Work shall not be started until the erosion control schedules and methods of operation for the applicable construction have been accepted by Engineer.

102-3.3 Construction details. Contractor will be required to incorporate all permanent erosion control features into the project at the earliest practicable time as outlined in the plans and approved CSPP. Except where future construction operations will damage slopes, Contractor shall perform permanent seeding, mulching, and other specified slope protection work in stages as soon as substantial areas of exposed slopes can be made available. Temporary erosion and pollution control measures will be used to correct conditions that develop during construction that were not foreseen during the design stage; that are needed prior to installation of permanent control features; or that are needed temporarily to control erosion that develops during normal construction practices but are not associated with permanent control features on the project.

Where erosion may be a problem, schedule and perform clearing and grubbing operations so that grading operations and permanent erosion control features can follow immediately if project conditions permit. Temporary erosion control measures are required if permanent measures cannot immediately follow grading operations. Engineer shall limit the area of clearing and grubbing, excavation, borrow, and embankment operations in progress, commensurate with Contractor's capability and progress in keeping the finish grading, mulching, seeding, and other such permanent control measures current with the accepted schedule. If seasonal limitations make such coordination unrealistic, temporary erosion control measures shall be taken immediately to the extent feasible and justified as directed by Engineer.

Contractor shall provide immediate permanent or temporary pollution control measures to minimize contamination of adjacent streams or other watercourses, lakes, ponds, or other areas of water impoundment as directed by Engineer. If temporary erosion and pollution control measures are required due to Contractor's negligence, carelessness, or failure to install permanent controls as a part of the work as scheduled or directed by Engineer, the work shall be performed by Contractor and the cost shall be incidental to this item.

Engineer may increase or decrease the area of erodible earth material that can be exposed at any time based on an analysis of project conditions.

Erosion control features installed by Contractor shall be maintained by Contractor during construction.

Provide temporary structures whenever construction equipment must cross watercourses at frequent intervals. Pollutants such as fuels, lubricants, bitumen, raw sewage, wash water from concrete mixing operations, and other harmful materials shall not be discharged into any waterways, impoundments or into natural or manmade channels.

102-3.4 Installation, maintenance, and removal of silt fence. Silt fences shall extend a minimum of 16 inches and a maximum of 34 inches above the ground surface. Posts shall be set no more than 10 feet center. Filter fabric shall be cut from a continuous roll to the length required minimizing joints where possible. When joints are necessary, the fabric shall be spliced at a support post with a minimum 12-inch overlap and securely sealed. A trench shall be excavated approximately 4 inches deep by 4 inches wide on the upslope side of the silt fence. Trench shall be backfilled, and the soil compacted over the silt fence fabric. Contractor shall remove and dispose of silt that accumulates during construction and prior to establishment of permanent erosion control. The fence shall be maintained in good working condition until permanent erosion control is established. Silt fence shall be removed upon approval of Engineer.

METHOD OF MEASUREMENT

102-4.1 Temporary erosion and pollution control work required will be performed as scheduled or directed by RPR. Completed and accepted work will be measured per lump sum. This price shall be full compensation for costs associated with preparation, administration, and superintendence of the SWPPP, furnishing all materials, labor, tools, and equipment, and for any fees required by the regulating agency

102-4.2 Control work performed for protection of construction areas outside the construction limits, such as borrow and waste areas, haul roads, equipment and material storage sites, and temporary plant sites, will not be measured and paid for directly but shall be considered as a subsidiary obligation of Contractor.

BASIS OF PAYMENT

102-5.1 Accepted quantities of temporary water pollution, soil erosion, and siltation control work ordered by RPR and measured as provided in paragraph 102-4.1 will be paid for under:

Item C-102	Temporary Air and Water Pollution, Soil Erosion, and Siltation Control per lump sum under progress payments by dividing total lump sum price by number of months to final completion.

REFERENCES

The publications listed below form a part of this specification to the extent referenced. The publications are referred to within the text by the basic designation only.

Advisory Circulars (AC)

AC 150/5200-33 *Hazardous Wildlife Attractants on or Near Airports*

AC 150/5370-2 *Operational Safety on Airports During Construction*

ASTM International (ASTM)

ASTM D6461 *Standard Specification for Silt Fence Materials*

United States Department of Agriculture (USDA)

FAA/USDA Wildlife Hazard Management at Airports, A Manual for Airport Personnel

END OF ITEM C-102

Item C-105 Mobilization

105-1 Description. This item of work shall consist of, but is not limited to, work and operations necessary for the movement of personnel, equipment, material, and supplies to and from the project site for work on the project except as provided in the contract as separate pay items.

105-2 Mobilization limit. Mobilization shall be limited to 10 percent of the total project cost.

105-3 Posted notices. Prior to commencement of construction activities, the Contractor must post the following documents in a prominent and accessible place where they may be easily viewed by all employees of the prime Contractor and by all employees of subcontractors engaged by the prime Contractor: Equal Employment Opportunity (EEO) Poster "Equal Employment Opportunity is the Law" in accordance with the Office of Federal Contract Compliance Programs Executive Order 11246, as amended; Davis Bacon Wage Poster (WH 1321) - DOL "Notice to All Employees" Poster; and Applicable Davis-Bacon Wage Rate Determination. These notices must remain posted until final acceptance of the work by the Owner.

105-4 Engineer/RPR field office. Not required.

METHOD OF MEASUREMENT

105-5 Basis of measurement and payment. Based upon the contract lump sum price for "Mobilization" partial payments will be allowed as follows:

a. With first pay request, 25%.
b. When 25% or more of original contract is earned, an additional 25%.
c. When 50% or more of original contract is earned, an additional 40%.
d. After Final Inspection, staging area clean-up and delivery of all Project Closeout materials as required by Section 90, paragraph 90-11, *Contractor Final Project Documentation,* the final 10%.

BASIS OF PAYMENT

105-6 Payment will be made under:

Item C-105 Mobilization, per lump sum

REFERENCES

The publications listed below form a part of this specification to the extent referenced. The publications are referred to within the text by the basic designation only.

Office of Federal Contract Compliance Programs (OFCCP)

Executive Order 11246, as amended

EEOC-P/E-1 – Equal Employment Opportunity is the Law Poster

United States Department of Labor, Wage and Hour Division (WHD)

WH 1321 – Employee Rights under the Davis-Bacon Act Poster

END OF ITEM C-105

Item P-101 Preparation/Removal of Existing Pavements

DESCRIPTION

101-1 This item shall consist of new pavement construction, removal of existing pavement, existing drainage pipe, culvert, drainage Safety End Treatment (SET), and other miscellaneous items. The work shall be accomplished in accordance with these specifications and the applicable plans.

EQUIPMENT AND MATERIALS

101-2 All equipment and materials shall be specified here and in the following paragraphs or approved by Engineer. Equipment shall not cause damage to the pavement to remain in place.

CONSTRUCTION

101-3.1 Removal of existing pavement.

Contractor's removal operation shall be controlled to not damage adjacent pavement structure, and base material, cables, utility ducts, pipelines, or drainage structures which are to remain under the pavement.

a. Concrete pavement removal. Full depth saw cuts shall be made perpendicular to the slab surface. Contractor shall saw through the full depth of the slab including any dowels at the joint, removing the pavement and installing new dowels as shown on the plans and per the specifications. Where the perimeter of the removal limits is not located on the joint and there are no dowels present, the perimeter shall be saw cut the full depth of the pavement. The pavement inside the saw cut shall be removed by methods which will not cause distress in the pavement which is to remain in place. If the material is to be wasted on the airport site, it shall be reduced to a maximum size of 2 inches. Concrete slabs that are damaged by under breaking shall be repaired or removed and replaced as directed by Engineer.

The edge of existing concrete pavement against which new pavement abuts shall always be protected from damage. Spall and underbreak repair shall be in accordance with the plans. Any underlaying material that is to remain in place, shall be recompacted and/or replaced as shown on the plans. Adjacent areas damaged during repair shall be repaired or replaced at Contractor's expense.

b. Asphalt pavement removal and reuse. Existing asphalt surface and granular base shall be pulverized and removed to limits shown on Drawings or as directed by Engineer. Pulverized materials shall be mixed, salvaged, and reused as a subbase course under Item P-154. Existing asphalt and base may be stockpiled separately to mix in proportions to best meet P-154 gradation requirements.

c. Repair or removal of Base, Subbase, and/or Subgrade. Not used.

101-3.2 Preparation of joints and cracks prior to overlay/surface treatment. Not used.

101-3.3 Removal of Foreign Substances/contaminates. Not used.

101-3.4 Concrete spall or failed asphaltic concrete pavement repair. Not used.

101-3.5 Cold milling. Milling shall be performed with a power-operated milling machine or grinder, capable of producing a uniform finished surface. The milling machine or grinder shall operate without tearing or gouging the underlaying surface. The milling machine or grinder shall be equipped with grade and slope controls, and a positive means of dust control. All access millings shall be removed and disposed

in areas designated on Plans or as directed by Engineer. If Contractor mills or grinds deeper or wider than the plans specify, Contractor shall replace the material removed with new material at Contractor's Expense.

a. Patching. The milling machine shall be capable of cutting a vertical edge without chipping or spalling the edges of the remaining pavement and it shall have a positive method of controlling the depth of cut. RPR shall layout the area to be milled with a straightedge in increments of 1-foot widths. The area to be milled shall cover only the failed area. Any excessive area that is milled because Contractor doesn't have the appropriate milling machine, or areas that are damaged because of his negligence, shall be repaired by Contractor at Contractor's Expense.

b. Profiling, grade correction, or surface correction. The milling machine shall have a minimum width of 7 feet and it shall be equipped with electronic grade control devices that will cut the surface to the grade specified. The tolerances shall be maintained within +0 inch and -1/4 inch of the specified grade. The machine must cut vertical edges and have a positive method of dust control. The machine must have the ability to remove the millings or cuttings from the pavement and load them into a truck. All access millings shall be removed and disposed in areas designated on the plans or as directed by Engineer.

c. Clean-up. Contractor shall sweep the milled surface daily and immediately after the milling until all residual materials are removed from the pavement surface. Prior to paving, Contractor shall wet down the milled pavement and thoroughly sweep/blow the surface to remove loose residual material. Waste materials shall be collected and removed from the pavement surface and adjacent areas by sweeping or vacuuming. Waste materials shall be removed and disposed in areas designated on the plans or as directed by Engineer.

101-3.6. Preparation of asphalt pavement surfaces prior to surface treatment. Not used.

101-3.7 Maintenance. Contractor shall perform all maintenance work necessary to keep the pavement in a satisfactory condition until the full section is complete and accepted by Engineer. The surface shall be kept clean and free from foreign material. The pavement shall always be properly drained. If cleaning is necessary or if the pavement becomes disturbed, any work repairs necessary shall be performed at Contractor's expense.

101-3.8 Preparation of Joints in Rigid Pavement prior to resealing. Prior to application of sealant material, clean and dry the joints of all scale, dirt, dust, old sealant, curing compound, moisture, and other foreign matter. Contractor shall demonstrate, in the presence of Engineer, that the method used cleans the joint and does not damage the joint.

101-3.8.1 Removal of Existing Joint Sealant. All existing joint sealants will be removed by plowing or use of hand tools. Any remaining sealant and or debris will be removed by use of wire brushes or other tools as necessary. Resaw joints removing no more than 1/16 inch from each joint face. Immediately after sawing, flush out joint with water and other tools as necessary to completely remove the slurry.

101-3.8.2 Cleaning prior to sealing. Immediately before sealing, joints shall be cleaned by removing any remaining laitance and other foreign material. Allow sufficient time to dry out joints prior to sealing. Joint surfaces will be surface-dry prior to installation of sealant.

101-3.8.3 Joint sealant. Joint material and installation will be in accordance with Item P-605.

101-3.9 Preparation of Cracks in Flexible Pavement prior to sealing. Not used.

101-3.9.1 Preparation of Crack. Not used.

101-3.9.2 Removal of Existing Crack Sealant. Not used.

101-3.9.3 Crack Sealant. Crack sealant material and installation will be in accordance with Item P-605.

101-3.9.4 Removal of Pipe and other Buried Structures.

a. Removal of Existing Pipe Material. Remove the types of pipe as indicated on the plans. The pipe material shall be legally disposed of off-site in a timely manner following removal. Trenches shall be

backfilled with material equal to or better in quality than adjacent embankment. Trenches under paved areas must be compacted to 95% of ASTM D698.

b. Removal of Inlets/Manholes. Where indicated on the plans or as directed by Engineer, inlets/manholes shall be removed and legally disposed of off-site in a timely fashion after removal. Excavations after removal shall be backfilled with material equal or better in quality than adjacent embankment. When under paved areas must be compacted to 95% of ASTM D698, when outside of paved areas must be compacted to 95% of ASTM D698.

c. Removal of Safety End Treatments. Where indicated on plans or as directed by Engineer, drainage pipes/culverts and safety end treatments shall be removed and legally disposed off-site in a timely fashion after removal. Excavations after removal shall be backfilled with material equal or better in quality than adjacent embankment. When under paved areas must be compacted to 95% of ASTM D698, when outside of paved areas must be compacted to 95% of ASTM D698.

METHOD OF MEASUREMENT

101-4.1 Pavement removal for reuse. The unit of measurement for pavement removal shall be the number of square yards removed by Contractor. Any pavement removed outside the limits of removal because the pavement was damaged by negligence on the part of Contractor shall not be included in the measurement for payment. No direct measurement or payment shall be made for saw cutting. Saw cutting shall be incidental to pavement removal.

101-4.7 Removal of Pipe and other Buried Structures. No separate measurement for payment will be made. The work covered by this section shall be considered as a subsidiary obligation of Contractor and covered under the other contract items.

BASIS OF PAYMENT

101-5.1 Payment. Payment shall be made at contract unit price for the unit of measurement as specified above. This price shall be full compensation for furnishing all materials and for all preparation, hauling, and placing of the material and for all labor, equipment, tools, and incidentals necessary to complete this item.

Item P 101-5.1	Pavement Removal for Reuse, per square yard (no payment for saw cutting along existing pavement as it is incidental to other work items)

REFERENCES

The publications listed below form a part of this specification to the extent referenced. The publications are referred to within the text by the basic designation only.

Advisory Circulars (AC)

AC 150/5380-6	Guidelines and Procedures for Maintenance of Airport Pavements.

END OF ITEM P-101

Item P-152 Excavation, Subgrade, and Embankment

DESCRIPTION

152-1.1 This item covers excavation, disposal, placement, and compaction of all materials within the limits of the work required to construct safety areas, runways, taxiways, aprons, and intermediate areas as well as other areas for drainage, building construction, parking, or other purposes in accordance with these specifications and in conformity to the dimensions and typical sections shown on the plans.

152-1.2 Classification. All material excavated shall be classified as defined below:

a. Unclassified excavation. Unclassified excavation shall consist of the excavation and disposal of all material, regardless of its nature which is not otherwise classified and paid for under one of the following items. Stockpiles of any material must not be placed in a manner to penetrate any approach surfaces. Coordinate with RPR for the allowable location and height of all stockpiles.

Rock excavation. Rock excavation shall include all solid rock in ledges, in bedded deposits, in unstratified masses, and conglomerate deposits which are so firmly cemented they cannot be removed without blasting or using rippers. All boulders containing a volume of more than 1/2 cubic yard will be classified as "rock excavation."

Muck excavation. Muck excavation shall consist of the removal and disposal of deposits or mixtures of soils and organic matter not suitable for foundation material. Muck shall include materials that will decay or produce subsidence in the embankment. It may consist of decaying stumps, roots, logs, humus, or other material not satisfactory for incorporation in the embankment.

Drainage excavation. Drainage excavation shall consist of all excavation made for the primary purpose of drainage and includes drainage ditches, such as intercepting, inlet or outlet ditches; temporary levee construction; or any other type as shown on the plans.

Borrow excavation. Borrow excavation shall consist of approved material required for the construction of embankments or for other portions of the work in excess of the quantity of usable material available from required excavations. Borrow material shall be obtained from areas designated by Engineer within the limits of the airport property but outside the normal limits of necessary grading, or from areas outside the airport boundaries.

152-1.3 Unsuitable excavation. Unsuitable material shall be disposed in designated waste areas as shown on the Plans or as directed by Engineer. Owner reserves the right to modify the stockpile location, as appropriate, without penalty or modification to Contract unit price, as necessary during the Project. Materials containing vegetable or organic matter, such as muck, peat, organic silt, or sod shall be considered unsuitable for use in embankment construction. Material suitable for topsoil may be used on the embankment slope when approved by Engineer.

CONSTRUCTION METHODS

152-2.1 General. Before beginning excavation, grading, and embankment operations in any area, the area shall be cleared or cleared and grubbed in accordance with Item P-151.

The suitability of material to be placed in embankments shall be subject to approval by Engineer. No such material shall be placed prior to obtaining Engineer approval. All unsuitable material shall become

Contractor property, unless specifically directed otherwise by Owner/Engineer, and disposed outside Airport property at Contractor expense. All waste areas shall be graded to allow positive drainage of the area and adjacent areas. The surface elevation of waste areas shall be specified on the plans or approved by Engineer.

When Contractor's excavating operations encounter artifacts of historical or archaeological significance, the operations shall be temporarily discontinued and Engineer notified per Section 70, paragraph 70-20. At the direction of Engineer, Contractor shall excavate the site in such a manner as to preserve the artifacts encountered and allow for their removal. Such excavation will be paid for as extra work.

Areas outside the limits of the pavement areas where the top layer of soil has become compacted by hauling or other Contractor activities shall be scarified and disked to a depth of 4 inches, to loosen and pulverize the soil. Stones or rock fragments larger than 4 inches in their greatest dimension will not be permitted in the top 6 inches of the subgrade.

If it is necessary to interrupt existing surface drainage, sewers or under-drainage, conduits, utilities, or similar underground structures, Contractor shall be responsible for and shall take all necessary precautions to preserve them or provide temporary services. When such facilities are encountered, Contractor shall notify Engineer, who shall arrange for their removal if necessary. Contractor, at their own expense, shall satisfactorily repair or pay the cost of all damage to such facilities or structures that may result from any of Contractor's operations during the period of the contract.

a. Blasting. Not allowed.

152-2.2 Excavation. No excavation shall be started until the work has been staked out by Contractor and Engineer has obtained from Contractor, the survey notes of the elevations and measurements of the ground surface. Contractor and Engineer shall agree that the original ground lines shown on the original topographic mapping are accurate or agree to any adjustments made to the original ground lines.

Volumetric quantities were calculated by comparing DTM files of the applicable design surfaces and generating Triangle Volume Reports. Electronic copies of DTM files and a paper copy of the original topographic map will be issued to the successful bidder.

Existing grades on the design cross sections or DTMs, where they do not match the locations of actual spot elevations shown on the topographic map, were developed by computer interpolation from those spot elevations. Prior to disturbing original grade, Contractor shall verify the accuracy of the existing ground surface by verifying spot elevations at the same locations where original field survey data was obtained as indicated on the topographic map. Contractor shall recognize that, due to the interpolation process, the actual ground surface at any particular location may differ somewhat from the interpolated surface shown on the design cross sections or obtained from the DTM's. Contractor's verification of original ground surface, however, shall be limited to verification of spot elevations as indicated herein, and no adjustments will be made to the original ground surface unless Contractor demonstrates that spot elevations shown are incorrect. For this purpose, spot elevations which are within 0.1 foot of the stated elevations for ground surfaces, or within 0.04 foot for hard surfaces (pavements, buildings, foundations, structures, etc.) shall be considered "no change". Only deviations in excess of these will be considered for adjustment of the original ground surface. If Contractor's verification identifies discrepancies in the topographic map, Contractor shall notify Engineer in writing at least two weeks before disturbance of existing grade to allow sufficient time to verify the submitted information and adjust the design cross sections or DTMs. Disturbance of existing grade in any area shall constitute acceptance by Contractor of the accuracy of the original elevations shown on the topographic map for that area.

All areas to be excavated shall be stripped of vegetation and topsoil. Topsoil shall be stockpiled for future use in areas designated on the plans or by Engineer. All suitable excavated material shall be used in the formation of embankment, subgrade, or other purposes as shown on the plans. All unsuitable material shall be disposed outside Airport property at Contractor expense.

The grade shall be maintained so that the surface is well drained at all times.

When the volume of the excavation exceeds that required to construct the embankments to the grades as indicated on the plans, or excavated material is deemed unsuitable, material shall become Contractor property. Contractor shall dispose such materials off Airport property at Contractor expense. When the volume of excavation is not sufficient for constructing the embankments to the grades indicated, the deficiency shall be obtained from areas of Project with excess excavation or borrow areas located on Airport property as designated by Owner/Engineer. In either case, any additional hauling or disposal expenses shall be Contractor responsibility.

a. Selective grading. When selective grading is indicated on the plans, the more suitable material designated by Engineer shall be used in constructing the embankment or in capping the pavement subgrade. If, at the time of excavation, it is not possible to place this material in its final location, it shall be stockpiled in approved areas until it can be placed. The more suitable material shall then be placed and compacted as specified. Selective grading shall be considered incidental to the work involved. The cost of stockpiling and placing the material shall be included in the various pay items of work involved.

b. Undercutting. Rock, shale, hardpan, loose rock, boulders, or other material unsatisfactory for safety areas, subgrades, roads, shoulders, or any areas intended for turf shall be excavated to a minimum depth of 12 inches below the subgrade or to the depth specified by Engineer. Muck, peat, matted roots, or other yielding material, unsatisfactory for subgrade foundation, shall be removed to the depth specified. Unsuitable materials shall be disposed off the airport. The cost is incidental to this item. This excavated material shall be paid for at the contract unit price per cubic yard for unclassified excavation. The excavated area shall be backfilled with suitable material obtained from the grading operations or borrow areas and compacted to specified densities. The necessary backfill will constitute a part of the embankment. Where rock cuts are made, backfill with select material. Any pockets created in the rock surface shall be drained in accordance with the details shown on the plans. Undercutting will be paid as unclassified excavation.

c. Over-break. Over-break, including slides, is that portion of any material displaced or loosened beyond the finished work as planned or authorized by Engineer. All over-break shall be graded or removed by Contractor and disposed of as directed by Engineer. Engineer shall determine if the displacement of such material was unavoidable and their own decision shall be final. Payment will not be made for the removal and disposal of over-break that RPR determines as avoidable. Unavoidable over-break will be classified as "Unclassified Excavation."

d. Removal of utilities. The removal of existing structures and utilities required to permit the orderly progress of work will be accomplished by Contractor unless shown otherwise on the plans. If during work, an active utility is encountered, or any utility not provided for on plans, Engineer shall be notified immediately, and no work shall proceed in that area without Engineer approval. All existing foundations shall be excavated at least 2 feet below the top of subgrade or as indicated on the plans, and the material disposed of as directed by Engineer. All foundations thus excavated shall be backfilled with suitable material and compacted as specified for embankment or as shown on the plans.

152-2.3 Borrow excavation. Not required. –There are no borrow sources within the boundaries of the airport property.

152-2.4 Drainage excavation. Drainage excavation shall consist of excavating drainage ditches including intercepting, inlet, or outlet ditches; or other types as shown on the plans. The work shall be performed in sequence with the other construction. Ditches shall be constructed prior to starting adjacent excavation operations. All satisfactory material shall be placed in embankment fills; unsuitable material shall be placed in designated waste areas or as directed by Engineer. All necessary work shall be performed true to final line, elevation, and cross-section. Contractor shall maintain ditches constructed on the project to the required cross-section and shall keep them free of debris or obstructions until the project is accepted.

152-2.5 Preparation of cut areas or areas where existing pavement has been removed. In those areas on which a subbase or base course is to be placed, the top 12 inches of subgrade shall be compacted to not less than 100% of maximum density for non-cohesive soils, and 95% of maximum density for cohesive soils as determined by ASTM D698. As used in this specification, "non-cohesive" shall mean those soils having a plasticity index (PI) of less than 3 as determined by ASTM D4318.

152-2.6 Preparation of embankment area. All sod and vegetative matter shall be removed from the surface upon which the embankment is to be placed. The cleared surface shall be broken up by plowing or scarifying to a minimum depth of 6 inches and shall then be compacted per paragraph 152-2.10.

Sloped surfaces steeper than one (1) vertical to four (4) horizontal shall be plowed, stepped, benched, or broken up so that the fill material will bond with the existing material. When the subgrade is part fill and part excavation or natural ground, the excavated or natural ground portion shall be scarified to a depth of 12 inches and compacted as specified for the adjacent fill.

No direct payment shall be made for the work performed under this section. The necessary clearing and grubbing and the quantity of excavation removed will be paid for under the respective items of work.

152-2.7 Control Strip. The first half-day of construction of subgrade/embankment shall be considered as a control strip for Contractor to demonstrate, in the presence of Engineer, that the materials, equipment, and construction processes meet the requirements of this specification. The sequence and manner of rolling necessary to obtain specified density requirements shall be determined. The maximum compacted thickness may be increased to a maximum of 12 inches upon Contractor’s demonstration that approved equipment and operations will uniformly compact the lift to the specified density. Engineer must witness this demonstration and approve the lift thickness prior to full production.

Control strips that do not meet specification requirements shall be reworked, recompacted, or removed and replaced at Contractor’s expense. Full operations shall not begin until the control strip has been accepted by Engineer. Contractor shall use the same equipment, materials, and construction methods for the remainder of construction, unless adjustments made by Contractor are approved in advance by Engineer.

152-2.8 Formation of embankments. The material shall be constructed in lifts as established in the control strip, but not less than 6 inches nor more than 12 inches of compacted thickness.

When more than one lift is required to establish the layer thickness shown on the plans, the construction procedure described here shall apply to each lift. No lift shall be covered by subsequent lifts until tests verify that compaction requirements have been met. Contractor shall rework, recompact and retest any material placed which does not meet the specifications.

The lifts shall be placed, to produce a soil structure as shown on the typical cross-section or as directed by Engineer. Materials such as brush, hedge, roots, stumps, grass, and other organic matter, shall not be incorporated or buried in the embankment.

Earthwork operations shall be suspended at any time when satisfactory results cannot be obtained due to rain, freezing, or other unsatisfactory weather conditions in the field. Frozen material shall not be placed in the embankment, nor shall embankment be placed upon frozen material. Material shall not be placed on surfaces that are muddy, frozen, or contain frost. Contractor shall drag, blade, or slope the embankment to provide surface drainage at all times.

The material in each lift shall be within ±2% of optimum moisture content before rolling to obtain the prescribed compaction. The material shall be moistened or aerated as necessary to achieve a uniform moisture content throughout the lift. Natural drying may be accelerated by blending in dry material or manipulation alone to increase the rate of evaporation.

Contractor shall make the necessary corrections and adjustments in methods, materials, or moisture content to achieve the specified embankment density.

Engineer will take samples of excavated materials which will be used in embankment for testing to obtain a Moisture-Density Relations of Soils Report (Proctor) in accordance with ASTM D698. A new Proctor shall be obtained for each soil type based on visual classification. Proctor shall be ordered on Engineer discretion.

Density tests will be taken by Engineer for every 3,000 square yards of compacted embankment for each lift which is required to be compacted, or other appropriate frequencies as determined by Engineer.

If the material has greater than 30% retained on the 3/4-inch sieve, follow AASHTO T-180 Annex Correction of maximum dry density and optimum moisture for oversized particles.

Rolling operations shall be continued until the embankment is compacted to not less than 100% of maximum density for non-cohesive soils, and 95% of maximum density for cohesive soils as determined by ASTM D698. Under all areas to be paved, the embankments shall be compacted to a depth of 6 inches and to a density of not less than 95% of the maximum density as determined by ASTM D698. As used in this specification, "non-cohesive" shall mean those soils having a plasticity index (PI) of less than 3 as determined by ASTM D4318.

On all areas outside of the pavement areas, no compaction will be required on the top 4 inches which shall be prepared for a seedbed in accordance with Item T-901.

The in-place field density shall be determined in accordance with ASTM 6938 using Procedure A, the direct transmission method, and ASTM D6938 shall be used to determine the moisture content of the material. The machine shall be calibrated in accordance with ASTM D6938. Engineer shall perform all density tests.. If the specified density is not attained, the area represented by the test or as designated by Engineer shall be reworked and/or re-compacted and additional random tests made. This procedure shall be followed until the specified density is reached.

Compaction areas shall be kept separate, and no lift shall be covered by another lift until the proper density is obtained.

During construction of the embankment, Contractor shall route all construction equipment evenly over the entire width of the embankment as each lift is placed. Lift placement shall begin in the deepest portion of the embankment fill. As placement progresses, the lifts shall be constructed approximately parallel to the finished pavement grade line.

When rock, concrete pavement, asphalt pavement, and other embankment material are excavated at approximately the same time as the subgrade, the material shall be incorporated into the outer portion of the embankment and the subgrade material shall be incorporated under the future paved areas. Stones, fragmentary rock, and recycled pavement larger than 4 inches in their greatest dimensions will not be allowed in the top 12 inches of the subgrade. Rockfill shall be brought up in lifts as specified or as directed by Engineer and the finer material shall be used to fill the voids forming a dense, compact mass. Rock, cement concrete pavement, asphalt pavement, and other embankment material shall not be disposed of except at places and in the manner designated on the plans or by Engineer.

When the excavated material consists predominantly of rock fragments of such size that the material cannot be placed in lifts of the prescribed thickness without crushing, pulverizing, or further breaking down the pieces, such material may be placed in the embankment as directed in lifts not exceeding 2 feet in thickness. Each lift shall be leveled and smoothed with suitable equipment by distribution of spalls and finer fragments of rock. The lift shall not be constructed above an elevation 4 feet below the finished subgrade.

Payment for compacted embankment will be made under embankment in-place and no payment will be made for excavation, borrow, or other items.

152-2.9 Proof rolling. The purpose of proof rolling the subgrade is to identify any weak areas in the subgrade and not for compaction of the subgrade. Before start of embankment, and after compaction is completed, the subgrade area shall be proof rolled with a 25- ton proof roller with tires spaced not more

than 32 inches on-center with tires inflated to 125 psi in the presence of Engineer. Apply a minimum of 2 rolling coverage, or as specified by Engineer, under pavement areas. A coverage is defined as the application of one tire print over the designated area. Soft areas of subgrade that deflect more than 1 inch or show permanent deformation greater than 1 inch shall be removed and replaced with suitable material or reworked to conform to the moisture content and compaction requirements in accordance with these specifications. Removal and replacement of soft areas is incidental to this item.

152-2.10 Compaction requirements. The subgrade under areas to be paved shall be compacted to a depth of 12 inches and to a density of not less than 100% of the maximum dry density as determined by ASTM D698. The subgrade in areas outside the limits of the pavement areas shall be compacted to a depth of 12 inches and to a density of not less than 95% of the maximum density as determined by ASTM D698.

The material to be compacted shall be within ±2% of optimum moisture content before being rolled to obtain the prescribed compaction (except for expansive soils). When the material has greater than 30% retained on the 3/4-inch sieve, follow the methods in ASTM D698. Tests for moisture content and compaction will be taken at a minimum of 500 S.Y. of subgrade. All quality assurance testing shall be done by Engineer.

The in-place field density shall be determined in accordance with ASTM D6938 using Procedure A, the direct transmission method, and ASTM D6938 shall be used to determine the moisture content of the material. The machine shall be calibrated in accordance with ASTM D6938 within 12 months prior to its use on this contract. The gage shall be field standardized daily.

Density tests will be taken by Engineer for every 500 square yards of completed subgrade. If a nuclear gage is used for density determination, two random readings shall be made for each 500 square yards.

Maximum density refers to maximum dry density at optimum moisture content unless otherwise specified.

If the specified density is not attained, the entire lot shall be reworked and/or re-compacted and additional random tests made. This procedure shall be followed until the specified density is reached.

All cut-and-fill slopes shall be uniformly dressed to the slope, cross-section, and alignment shown on the plans or as directed by Engineer and the finished subgrade shall be maintained.

152-2.11 Finishing and protection of subgrade. Finishing and protection of the subgrade is incidental to this item. Grading and compacting of the subgrade shall be performed so that it will drain readily. All low areas, holes or depressions in the subgrade shall be brought to grade. Scarifying, blading, rolling and other methods shall be performed to provide a thoroughly compacted subgrade shaped to the lines and grades shown on the plans. All ruts or rough places that develop in the completed subgrade shall be graded, recompacted, and retested. Contractor shall protect the subgrade from damage and limit hauling over the finished subgrade to only traffic essential for construction purposes.

Contractor shall maintain the completed course in satisfactory condition throughout placement of subsequent layers. No subbase, base, or surface course shall be placed on the subgrade until the subgrade has been accepted by Engineer.

152-2.12 Haul. All hauling will be considered a necessary and incidental part of the work. Contractor shall include the cost in the contract unit price for the pay of items of work involved. No payment will be made separately or directly for hauling on any part of the work.

Contractor's equipment shall not cause damage to any excavated surface, compacted lift or to the subgrade as a result of hauling operations. Any damage caused as a result of Contractor's hauling operations shall be repaired at Contractor's expense.

Contractor shall be responsible for providing, maintaining, and removing any haul roads or routes within or outside of the work area, and shall return the affected areas to their former condition, unless otherwise authorized in writing by Owner. No separate payment will be made for any work or materials associated

with providing, maintaining, and removing haul roads or routes.

152-2.13 Surface Tolerances. In those areas on which a subbase or base course is to be placed, the surface shall be tested for smoothness and accuracy of grade and crown. Any portion lacking the required smoothness or failing in accuracy of grade or crown shall be scarified to a depth of at least 3 inches, reshaped and recompacted to grade until the required smoothness and accuracy are obtained and approved by Engineer. Contractor shall perform all final smoothness and grade checks in the presence of Engineer. Any deviation in surface tolerances shall be corrected by Contractor at Contractor's expense.

- **a. Smoothness.** The finished surface shall not vary more than ±1/2 inch when tested with a 12-foot straightedge applied parallel with and at right angles to the centerline. The straightedge shall be moved continuously forward at half the length of the 12-foot straightedge for the full length of each line on a 50-foot grid.
- **b. Grade.** The grade and crown shall be measured on a 50-foot grid and shall be within ±0.05 feet of the specified grade.

On safety areas, turfed areas and other designated areas within the grading limits where no subbase or base is to placed, grade shall not vary more than 0.10 feet from specified grade. Any deviation in excess of this amount shall be corrected by loosening, adding or removing materials, and reshaping.

152-2.14 Topsoil. When topsoil is specified or required as shown on the plans or under Item T-905, it shall be salvaged from stripping or other grading operations. The topsoil shall meet the requirements of Item T-905. If, at the time of excavation or stripping, the topsoil cannot be placed in its final section of finished construction, the material shall be stockpiled at approved locations. Stockpiles shall be located as shown on the plans and the approved CSPP and shall not be placed on areas that subsequently will require any excavation or embankment fill. If, in the judgment of Engineer, it is practical to place the salvaged topsoil at the time of excavation or stripping, the material shall be placed in its final position without stockpiling or further rehandling.

Upon completion of grading operations, stockpiled topsoil shall be handled and placed as shown on the plans and as required in Item T-905. Topsoil shall be paid for as provided in Item T-905. No direct payment will be made for topsoil under Item P-152.

METHOD OF MEASUREMENT

152-3.1 Measurement for payment specified by the cubic yard shall be computed by the comparison of digital terrain model (DTM) surfaces for computation of neat line design quantities. The end area is that bound by the original ground line established by field cross-sections and the final theoretical pay line established by cross-sections shown on the plans, subject to verification by Engineer.

152-3.1 Quantity of unclassified drainage excavation to be paid for shall be number of cubic yards measured in original position. Measurement shall not include quantity of materials excavated without authorization beyond normal slope lines or quantity of material used for purposes other than those directed.

152-3.2 Not used.

152-3.3 Not used.

152-3.4 Quantity of grading and subgrade preparation under pavement area and unpaved area to be paid for shall be the number of cubic yards.

BASIS OF PAYMENT

152-4.1 Unclassified drainage excavation payment shall be made at the contract unit price per cubic yard. This price shall be full compensation for furnishing all materials, labor, equipment, tools, and incidentals necessary to complete the item.

152-4.2 Not used.

152-4.3 Not used.

152-4.4 For grading and subgrade preparation, pavement shall be made at Contract unit price per cubic yard. This price shall be full compensation for furnishing all materials, labor, equipment, tools, and incidentals necessary to complete the item.

Payment will be made under:

Item P-152-4.1	Drainage Excavation and Trenching, per cubic yard
Item P-152-4.2	Not used.
Item P-152-4.3	Not used.
Item P-152-4.4	Excavation, Grading, and Subgrade Preparation, per cubic yard
Item P-152-4.5	Grading in Unpaved Areas, per square yard

REFERENCES

The publications listed below form a part of this specification to the extent referenced. The publications are referred to within the text by the basic designation only.

American Association of State Highway and Transportation Officials (AASHTO)

AASHTO T-180	Standard Method of Test for Moisture-Density Relations of Soils Using a 4.54-kg (10-lb) Rammer and a 457-mm (18-in.) Drop

ASTM International (ASTM)

ASTM D698	Standard Test Methods for Laboratory Compaction Characteristics of Soil Using Standard Effort (12,400 ft-lbf/ft^3 (600 kN-m/m^3))
ASTM D1556	Standard Test Method for Density and Unit Weight of Soil in Place by the Sand-Cone Method
ASTM D1557	Standard Test Methods for Laboratory Compaction Characteristics of Soil Using Modified Effort (56,000 ft-lbf/ft^3 (2700 kN-m/m^3))
ASTM D6938	Standard Test Methods for In-Place Density and Water Content of Soil and Soil-Aggregate by Nuclear Methods (Shallow Depth)

Advisory Circulars (AC)

AC 150/5370-2	Operational Safety on Airports During Construction Software

Software

FAARFIELD – FAA Rigid and Flexible Iterative Elastic Layered Design

U.S. Department of Transportation

FAA RD-76-66	Design and Construction of Airport Pavements on Expansive Soils

END OF ITEM P-152

Item P-154 Subbase Course

DESCRIPTION

154-1.1 This item shall consist of a subbase course composed of existing asphalt surfacing and granular base materials salvaged under Item P-101, constructed on a prepared subgrade or underlying course in accordance with these specifications, and in conformity with the dimensions and typical cross-section shown on the plans.

MATERIALS

154-2.1 Materials. The subbase material shall consist of hard durable particles or fragments of granular aggregates, recycled asphalt pavement (RAP), and salvaged granular base. The material may be obtained from gravel pits, stockpiles, or may be produced from a crushing and screening plant with proper blending. The materials from these sources shall meet the requirements for gradation, quality, and consistency. The material shall be free from vegetative matter, excessive amounts of clay, and other objectionable substances; uniformly blended; and be capable of being compacted into a dense, stable subbase.

The subbase material shall exhibit a California Bearing Ratio (CBR) value of at least 20 when tested in accordance with ASTM D1883. The subbase material shall meet the gradation specified in the table below.

Subbase Gradation Requirements

Sieve designation	Percentage by weight passing sieves		Contractor's Final Gradation	Job Control Grading Band Tolerances[1] (Percent)
	Subbase Aggregate	Recycled pavement (RAP or RCO)		
3 inches	100			0
1 1/2 inches		100		0
3/4 inch	70-100	70-100		±10
No. 10	20-100	20-100		±10
No. 40	5-60	5-60		±5
No. 200	0-15	0-15		±5

[1]"Job Control Grading Band Tolerances" shall be applied to "Contractor's Final Gradation" to establish the job control grading band.

The portion of the material passing the No. 40 sieve shall have a liquid limit of not more than 25 and a plasticity index of not more than 6 when tested in accordance with ASTM D4318.

154-2.2 Sampling and testing.

a. Aggregate base materials. Samples shall be taken by Contractor per ASTM D75 for initial aggregate subbase requirements and gradation. Material shall meet the requirements in paragraphs 154-2.1. Contractor shall submit to Resident Project Representative (RPR) certified test results showing that the aggregate meets the Material requirements of this section. Tests shall be representative of the material to be used for the project.

b. Gradation requirements. Contractor shall take at least one aggregate subbase sample per day in the presence of RPR to check the final gradation. Samples shall be taken from the in-place, un-compacted

material at sampling locations determined by RPR on a random basis per ASTM D3665. Sampling shall be per ASTM D75 and tested per ASTM C136 and C117. Results shall be furnished to RPR by Contractor each day during construction. Material shall meet the requirements in paragraph 154-2.1.

154-2.3 Separation Geotextile. Not used.

154-2.4 Geogrid. Not used.

CONSTRUCTION METHODS

154-3.1 General. The subbase course shall be placed where designated on the plans or as directed by RPR. The material shall be shaped and thoroughly compacted within the tolerances specified.

Granular subbases which, due to grain sizes or shapes, are not sufficiently stable to support the construction equipment without movement, shall be mechanically modified to the depth necessary to provide stability as directed by RPR. The mechanical modification shall include the addition of a fine-grained medium to bind the particles of the subbase material sufficiently to furnish a bearing strength, so the course will not deform under construction equipment traffic.

154-3.2 Preparing underlying course. Prior to constructing the subbase course, clean the underlying course or subgrade of all foreign substances. The surface of the underlying course or subgrade shall meet specified compaction and surface tolerances in accordance with Item P-152. Correct ruts, soft yielding spots in the underlying courses, and subgrade areas having inadequate compaction and/or deviations of the surface from the specified requirements, by loosening and removing soft or unsatisfactory material, adding approved material, reshaping to line and grade, and recompacting to specified density requirements. For cohesionless underlying courses or subgrades containing sands or gravels, as defined in ASTM D2487, the surface shall be stabilized prior to placement of the overlying course by mixing the overlying course material into the underlying course and compacting by approved methods. Stabilized material shall be considered as part of the underlying course and shall meet all requirements for the underlying course. The finished underlying course shall not be disturbed by traffic or other operations and shall be maintained in a satisfactory condition until the overlying course is placed. The underlying course shall be checked and accepted by RPR before placing and spreading operations are started.

To protect the subgrade and to ensure proper drainage, spreading of the subbase shall begin along the centerline of the pavement on a crowned section or on the high side of pavements with a one-way slope.

154-3.3 Control Strip. The first half-day of subbase construction shall be considered as a control strip for Contractor to demonstrate, in the presence of RPR, that the materials, equipment, and construction processes meet the requirements of this specification. The sequence and manner of rolling necessary to obtain specified density requirements shall be determined. The maximum compacted thickness may be increased to a maximum of 12 inches upon Contractor’s demonstration that approved equipment and operations will uniformly compact the lift to the specified density. RPR must witness this demonstration and approve the lift thickness prior to full production.

Control strips that do not meet specification requirements shall be reworked, re-compacted, or removed and replaced at Contractor expense. Full operations shall not begin until the control strip has been accepted by RPR. Contractor shall use the same equipment, materials, and construction methods for the remainder of construction, unless adjustments made by Contractor are approved in advance by RPR.

154-3.4 Placement. The material shall be placed and spread on the prepared underlying layer by spreader boxes or other devices as approved by RPR, to a uniform thickness and width. The equipment shall have positive thickness controls to minimize the need for additional manipulation of the material. Dumping from vehicles that require re-handling shall not be permitted. Hauling over the uncompacted base course shall not be permitted. The material shall not be placed when the underlying course is soft or yielding.

Material shall meet gradation and moisture requirements prior to compaction. Material may be free-draining and the minimum moisture content shall be established for placement and compaction of the material.

The material shall be constructed in lifts as established in the control strip, but not less than 4 nor more than 12 inches of compacted thickness.

When more than one lift is required to establish the layer thickness shown on the plans, the construction procedure described here shall apply to each lift. No lift shall be covered by subsequent lifts until tests verify that compaction requirements have been met. Contractor shall rework, recompact, and retest any material placed which does not meet the specifications.

154-3.5 Compaction. The subbase material shall be compacted, adjusting moisture as necessary, to be within ±2% of optimum moisture. The field density of the compacted material shall be at least 100% of the maximum density as specified in paragraph 154-3.9a. If the specified density is not attained, the area of the lift represented by the test shall be reworked and/or re-compacted and additional random tests made. This procedure shall be followed until the specified density is reached. Maximum density refers to maximum dry density at optimum moisture content unless otherwise specified.

154-3.6 Weather limitation. Material shall not be placed unless the ambient air temperature is at least 40°F and rising. Work on subbase course shall not be conducted when the subgrade is wet, frozen, or subbase material contains frozen material.

154-3.7 Maintenance. No base or surface course shall be placed on subbase until subbase RPR accepts. Contractor shall maintain completed course in satisfactory condition throughout placement of subsequent layers. When material has been exposed to excessive rain, snow, or freeze-thaw conditions, Contractor shall verify that materials still meet all specification requirements before placement of additional material. Equipment may be routed over completed sections of subbase course, provided equipment does not damage the subbase course and the equipment is routed over the full width of the completed subbase course. Any damage to subbase course from routing equipment over the subbase course shall be repaired by Contractor at their expense.

154-3.8 Surface tolerance. In those areas on which a subbase or base course is to be placed, the surface shall be tested for smoothness and accuracy of grade and crown. Any portion lacking the required smoothness or failing in accuracy of grade or crown shall be scarified to a depth of at least 3 inches, reshaped and recompacted to grade until the required smoothness and accuracy are obtained and approved by RPR. Contractor shall perform all final smoothness and grade checks in the presence of RPR. Any deviation in surface tolerances shall be corrected by Contractor at Contractor expense.

a. Smoothness. Finished surface shall not vary more than ±1/2 inch when tested with a 12-foot straightedge applied parallel with and at right angles to centerline. Straightedge shall be moved continuously forward at half the length of 12-foot straightedge for full length of each line on a 50-foot grid.

b. Grade. The grade and crown shall be measured on a 50-foot grid and shall be within ±0.05 feet of the specified grade.

154-3.9 Acceptance sampling and testing. Aggregate base course shall be accepted for density and thickness on an area basis. Two test shall be made for density and thickness for each 1,200 square yards. Sampling locations will be determined on a random basis per ASTM D3665.

a. Density. Engineer's QA laboratory shall perform all density tests.

Each area shall be accepted for density when the field density is at least 100% of the maximum density of laboratory specimens compacted and tested per ASTM D698. The in-place field density shall be determined per ASTM D6938 using Procedure A, direct transmission method, and ASTM D6938 shall be used to determine the moisture content of the material. Machine shall be calibrated in accordance with ASTM D6938. If the specified density is not attained, the area represented by the failed test shall be reworked and/or recompacted and two additional random tests made. This procedure shall be followed until

the specified density is reached. Maximum density refers to maximum dry density at optimum moisture content unless otherwise specified.

When material has greater than 30 percent retained on the 3/4-inch sieve, use methods in ASTM D1557 and the procedures in AASHTO T180 Annex for correction of maximum dry density and optimum moisture for oversized particles.

b. Thickness. Thickness of the subbase course shall be within +0 and -1/2 inch of specified thickness as determined by depth tests taken by Contractor in the presence of RPR for each area. Where thickness is deficient by more than 1/2-inch, Contractor shall correct such areas at no additional cost by scarifying to a depth of at least 3 inches, adding new material of proper gradation, and the material shall be blended and recompacted to grade. Contractor shall replace, at his expense, base material where depth tests have been taken.

METHOD OF MEASUREMENT

154-4.1 Subbase course shall be measured by the number of `square yards`of subbase course material placed and compacted to specified density and plan thickness requirements in the completed course. On individual depth measurements, thicknesses more than 1/2 inch in excess of that shown on the plans shall be considered as the specified thickness plus 1/2 inch in computing the yardage for payment. Subbase materials shall not be included in any other excavation quantities.

BASIS OF PAYMENT

154-5.1 Payment shall be made at the contract unit price per square yard for subbase course. This price shall be full compensation for furnishing all materials; for all preparation, hauling, and placing of these materials; and for all labor, equipment, tools, and incidentals necessary to complete the item.

Payment will be made under:

Item P-154-5.1	Subbase Course, per square yard

REFERENCES

The publications listed below form a part of this specification to the extent referenced. The publications are referred to within the text by the basic designation only.

ASTM International (ASTM)

ASTM C117	Standard Test Method for Materials Finer than 75-µm (No. 200) Sieve in Mineral Aggregates by Washing
ASTM C136	Standard Test Method for Sieve Analysis of Fine and Coarse Aggregates
ASTM D75	Standard Practice for Sampling Aggregates
ASTM D698	Standard Test Methods for Laboratory Compaction Characteristics of Soil Using Standard Effort (12,400 ft-lbf/ft^3 (600 kN-m/m^3))
ASTM D1556	Standard Test Method for Density and Unit Weight of Soil in Place by the Sand-Cone Method
ASTM D1557	Standard Test Methods for Laboratory Compaction Characteristics of Soil Using Modified Effort (56,000 ft-lbf/ft^3 (2,700 kN-m/m^3))

ASTM D2487	Standard Practice for Classification of Soils for Engineering Purposes (Unified Soil Classification System)
ASTM D4253	Standard Test Methods for Maximum Index Density and Unit Weight of Soils Using a Vibratory Table
ASTM D4759	Practice for Determining the Specification Conformance of Geosynthetics
ASTM D4318	Standard Test Methods for Liquid Limit, Plastic Limit, and Plasticity Index of Soils
ASTM D6938	Standard Test Method for In-Place Density and Water Content of Soil and Soil-Aggregate by Nuclear Methods (Shallow Depth)

American Association of State Highway and Transportation Officials (AASHTO)

M 288	Geotextile Specification for Highway Applications

END OF ITEM P-154

Item P-209 Crushed Aggregate Base Course

DESCRIPTION

209-1.1 This item consists of a base course composed of crushed aggregate base constructed on a prepared course in accordance with these specifications and in conformity to the dimensions and typical cross-sections shown on the plans.

MATERIALS

209-2.1 Crushed aggregate base. Crushed aggregate shall consist of clean, sound, durable particles of crushed stone, crushed gravel, and shall be free from coatings of clay, silt, organic material, clay lumps or balls or other deleterious materials or coatings. The method used to produce the crushed gravel shall result in the fractured particles in the finished product as consistent and uniform as practicable. Fine aggregate portion, defined as the portion passing the No. 4 sieve shall consist of fines from the coarse aggregate crushing operation. The fine aggregate shall be produced by crushing stone, gravel, that meet the coarse aggregate requirements for wear and soundness. Aggregate base material requirements are listed in the following table.

Crushed Aggregate Base Material Requirements

Material Test	Requirement	Standard
Coarse Aggregate		
Resistance to Degradation	Loss: 45% maximum	ASTM C131
Soundness of Aggregates by Use of Sodium Sulfate **or** Magnesium Sulfate	Loss after 5 cycles: 12% maximum using Sodium sulfate - or - 18% maximum using magnesium sulfate	ASTM C88
Percentage of Fractured Particles	Minimum 90% by weight of particles with at least two fractured faces and 100% with at least one fractured face[1]	ASTM D5821
Flat Particles, Elongated Particles, or Flat and Elongated Particles	10% maximum, by weight, of flat, elongated, or flat and elongated particles [2]	ASTM D4791
Clay lumps and friable particles	Less than or equal to 3 percent	ASTM C142
Fine Aggregate		
Liquid limit	Less than or equal to 25	ASTM D4318
Plasticity Index	Not more than five (5)	ASTM D4318

[1] The area of each face shall be equal to at least 75% of the smallest mid-sectional area of the piece. When two fractured faces are contiguous, the angle between the planes of fractures shall be at least 30 degrees to count as two fractured faces.

[2] A flat particle is one having a ratio of width to thickness greater than five (5); an elongated particle is one having a ratio of length to width greater than five (5).

209-2.2 Gradation requirements. The gradation of the aggregate base material shall meet the requirements of the gradation given in the following table when tested per ASTM C117 and ASTM C136. The gradation shall be well graded from coarse to fine and shall not vary from the lower limit on one sieve to the high limit on an adjacent sieve or vice versa.

Gradation of Aggregate Base

Sieve Size	Design Range Percentage by Weight passing	Contractor's Final Gradation	Job Control Grading Band Tolerances[1](Percent)
2 inch	100		0
1-1/2 inch	95-100		±5
1 inch	70-95		±8
3/4 inch	55-85		±8
No. 4	30-60		±8
No. 40[2]	10-30		±5
No. 200[2]	0-10		±3

[1] Job Control Grading Band Tolerances for Contractor's Final Gradation" in the table shall be applied to "Contractor's Final Gradation" to establish a job control grading band. Full tolerance still applies if application of the tolerances results in a job control grading band outside the design range.

[2] The fraction of material passing the No 200 sieve shall not exceed two-thirds the fraction passing the No 40 sieve.

209-2.3 Sampling and Testing.

a. Aggregate base materials. Contractor shall take samples of the aggregate base in accordance with ASTM D75 to verify initial aggregate base requirements and gradation. Material shall meet the requirements in paragraph 209-2.1. This sampling and testing will be the basis for approval of the aggregate base quality requirements.

b. Gradation requirements. Contractor shall take at least two aggregate base samples per day in the presence of the Resident Project Representative (RPR) to check the final gradation. Sampling shall be per ASTM D75. Material shall meet the requirements in paragraph 209-2.2. The samples shall be taken from the in-place, un-compacted material at sampling points and intervals designated by RPR.

209-2.4 Separation Geotextile. Not used.

CONSTRUCTION METHODS

209-3.1 Control strip. The first half-day of construction shall be considered the control strip. Contractor shall demonstrate, in the presence of Engineer, that the materials, equipment, and construction processes meet the requirements of the specification. The sequence and manner of rolling necessary to obtain specified density requirements shall be determined. The maximum compacted thickness may be increased to a maximum of 12 inches upon Contractor's demonstration that approved equipment and operations will uniformly compact the lift to the specified density. Engineer must witness this demonstration and approve the lift thickness prior to full production.

Control strips that do not meet specification requirements shall be reworked, recompacted, or removed and replaced at Contractor expense. Full operations shall not continue until the control strip has been accepted by Engineer. Contractor shall use the same equipment, materials, and construction methods for the remainder of construction, unless adjustments made by Contractor are approved by Engineer.

209-3.2 Preparing underlying subgrade and/or subbase. The underlying subgrade and/or subbase shall be checked and accepted by Engineer before base course placing and spreading operations begin. Re-proof rolling of the subgrade or proof rolling of the subbase in accordance with Item P-152, at Contractor expense, may be required by Engineer if Contractor fails to ensure proper drainage or protect the subgrade and/or

subbase. Any ruts or soft, yielding areas due to improper drainage conditions, hauling, or any other cause, shall be corrected before the base course is placed. To ensure proper drainage, the spreading of the base shall begin along the centerline of the pavement on a crowned section or on the high side of the pavement with a one-way slope.

209-3.3 Production. The aggregate shall be uniformly blended and, when at a satisfactory moisture content per paragraph 209-3.5, the approved material may be transported directly to the placement.

209-3.4 Placement. The aggregate shall be placed and spread on the prepared underlying layer by spreader boxes or other devices as approved by Engineer, to a uniform thickness and width. The equipment shall have positive thickness controls to minimize the need for additional manipulation of the material. Dumping from vehicles that require re-handling shall not be permitted. Hauling over the uncompacted base course shall not be permitted.

The aggregate shall meet gradation and moisture requirements prior to compaction. The base course shall be constructed in lifts as established in the control strip, but not less than 4 inches nor more than 12 inches of compacted thickness.

When more than one lift is required to establish the layer thickness shown on the plans, the construction procedure described here shall apply to each lift. No lift shall be covered by subsequent lifts until tests verify that compaction requirements have been met. Contractor shall rework, re-compact and retest any material placed which does not meet the specifications at Contractor's expense.

209-3.5 Compaction. Immediately after completion of the spreading operations, compact each layer of the base course, as specified, with approved compaction equipment. The number, type, and weight of rollers shall be sufficient to compact the material to the required density within the same day that the aggregate is placed on the subgrade.

The field density of each compacted lift of material shall be at least 100% of the maximum density of laboratory specimens prepared from samples of the subbase material delivered to the jobsite. The laboratory specimens shall be compacted and tested in accordance with ASTM D1557. The moisture content of the material during placing operations shall be within ±2 percentage points of the optimum moisture content as determined by ASTM D1557. Maximum density refers to maximum dry density at optimum moisture content unless otherwise specified.

209-3.6 Weather limitations. Material shall not be placed unless the ambient air temperature is at least 40°F and rising. Work on base course shall not be conducted when the subgrade or subbase is wet or frozen or the base material contains frozen material.

209-3.7 Maintenance. The base course shall be maintained in a condition that will meet all specification requirements. When material has been exposed to excessive rain, snow, or freeze-thaw conditions, prior to placement of additional material, Contractor shall verify that materials still meet all specification requirements. Equipment may be routed over completed sections of base course, provided that no damage results and the equipment is routed over the full width of the completed base course. Any damage resulting to the base course from routing equipment over the base course shall be repaired by Contractor at Contractor's expense.

209-3.8 Surface tolerances. After the course has been compacted, the surface shall be tested for smoothness and accuracy of grade and crown. Any portion lacking the required smoothness or failing in accuracy of grade or crown shall be scarified to a depth of at least 3 inches, reshaped and recompacted to grade until the required smoothness and accuracy are obtained and approved by RPR. Any deviation in surface tolerances shall be corrected by Contractor at Contractor's expense. The smoothness and accuracy requirements specified here apply only to the top layer when base course is constructed in more than one layer.

a. Smoothness. The finished surface shall not vary more than 3/8-inch when tested with a 12-foot straightedge applied parallel with and at right angles to the centerline. Straightedge shall be moved continuously forward at half the length of the 12-foot straightedge for the full length of each line on a 50-foot grid.

b. Grade. The grade and crown shall be measured on a 50-foot grid and shall be within +0 and -1/2 inch of the specified grade.

209-3.9 Acceptance sampling and testing. Crushed aggregate base course shall be accepted for density and thickness on an area basis. Two tests shall be made for density and thickness for each 1,200 square yards. Sampling locations will be determined on a random basis per ASTM D3665

a. Density. Engineer shall perform all density tests.

Each area shall be accepted for density when the field density is at least 100% of the maximum density of laboratory specimens compacted and tested per ASTM D1557. The in-place field density shall be determined per ASTM D1556. If the specified density is not attained, the area represented by the failed test must be reworked and/or recompacted and two additional random tests made. This procedure shall be followed until the specified density is reached. Maximum density refers to maximum dry density at optimum moisture content unless otherwise specified.

b. Thickness. Depth tests shall be made by test holes at least 3 inches in diameter that extend through the base. The thickness of the base course shall be within +0 and -1/2 inch of the specified thickness as determined by depth tests taken by Contractor in the presence of RPR for each area. Where the thickness is deficient by more than 1/2-inch, Contractor shall correct such areas at no additional cost by scarifying to a depth of at least 3 inches, adding new material of proper gradation, and the material shall be blended and recompacted to grade. Contractor shall replace, at his expense, base material where depth tests have been taken.

METHOD OF MEASUREMENT

209-4.1 The quantity of crushed aggregate base course will be determined by measurement of the number of square yards of material actually constructed and accepted by Engineer as complying with the plans and specifications. Base materials shall not be included in any other excavation quantities.

BASIS OF PAYMENT

209-5.1 Payment shall be made at the contract unit price per square yard for crushed aggregate base course. This price shall be full compensation for furnishing all materials, for preparing and placing these materials, and for all labor, equipment tools, and incidentals necessary to complete the item.

Payment will be made under:

Item P-209-5.1	Crushed Aggregate Base Course (14 inches thick), per square yard

REFERENCES

The publications listed below form a part of this specification to the extent referenced. The publications are referred to within the text by the basic designation only.

ASTM International (ASTM)

ASTM C29	Standard Test Method for Bulk Density (“Unit Weight”) and Voids in Aggregate

ASTM C88	Standard Test Method for Soundness of Aggregates by Use of Sodium Sulfate or Magnesium Sulfate
ASTM C117	Standard Test Method for Materials Finer than 75-µm (No. 200) Sieve in Mineral Aggregates by Washing
ASTM C131	Standard Test Method for Resistance to Degradation of Small-Size Coarse Aggregate by Abrasion and Impact in the Los Angeles Machine
ASTM C136	Standard Test Method for Sieve or Screen Analysis of Fine and Coarse Aggregates
ASTM C142	Standard Test Method for Clay Lumps and Friable Particles in Aggregates
ASTM D75	Standard Practice for Sampling Aggregates
ASTM D698	Standard Test Methods for Laboratory Compaction Characteristics of Soil Using Standard Effort (12,400 ft-lbf/ft^3 (600 kN-m/m^3))
ASTM D1556	Standard Test Method for Density and Unit Weight of Soil in Place by the Sand-Cone Method
ASTM D1557	Standard Test Methods for Laboratory Compaction Characteristics of Soil Using Modified Effort (56,000 ft-lbf/ft^3 (2700 kN-m/m^3))
ASTM D2167	Standard Test Method for Density and Unit Weight of Soil in Place by the Rubber Balloon Method
ASTM D2419	Standard Test Method for Sand Equivalent Value of Soils and Fine Aggregate
ASTM D3665	Standard Practice for Random Sampling of Construction Materials
ASTM D4318	Standard Test Methods for Liquid Limit, Plastic Limit, and Plasticity Index of Soils
ASTM D4491	Standard Test Methods for Water Permeability of Geotextiles by Permittivity
ASTM D4643	Standard Test Method for Determination of Water Content of Soil and Rock by Microwave Oven Heating
ASTM D4751	Standard Test Methods for Determining Apparent Opening Size of a Geotextile
ASTM D4791	Standard Test Method for Flat Particles, Elongated Particles, or Flat and Elongated Particles in Coarse Aggregate
ASTM D5821	Standard Test Method for Determining the Percentage of Fractured Particles in Coarse Aggregate
ASTM D6938	Standard Test Method for In-Place Density and Water Content of Soil and Soil-Aggregate by Nuclear Methods (Shallow Depth)
ASTM D7928	Standard Test Method for Particle-Size Distribution (Gradation) of Fine-Grained Soils Using the Sedimentation (Hydrometer) Analysis

American Association of State Highway and Transportation Officials (AASHTO)

M288	Standard Specification for Geosynthetic Specification for Highway Applications

END OF ITEM P-209

Item P-401 Asphalt Mix Pavement

DESCRIPTION

401-1.1 This item shall consist of pavement courses composed of mineral aggregate and asphalt binder mixed in a central mixing plant and placed on a prepared base or stabilized course in accordance with these specifications and shall conform to the lines, grades, thicknesses, and typical cross-sections shown on the plans. Each course shall be constructed to the depth, typical section, and elevation required by the plans and shall be rolled, finished, and approved before the placement of the next course.

MATERIALS

401-2.1 Aggregate. Aggregates shall consist of crushed stone, crushed gravel, screenings, natural sand, and mineral filler, as required. The aggregates should have no known history of detrimental pavement staining due to ferrous sulfides, such as pyrite. Coarse aggregate is the material retained on the No. 4 sieve. Fine aggregate is the material passing the No. 4 sieve.

a. Coarse aggregate. Coarse aggregate shall consist of sound, tough, durable particles, free from films of matter that would prevent thorough coating and bonding with the asphalt material and free from organic matter and other deleterious substances. Coarse aggregate material requirements are given in this table:

Coarse Aggregate Material Requirements

Material Test	Requirement	Standard
Resistance to Degradation	Loss: 40% maximum	ASTM C131
Soundness of Aggregates by Use of Sodium Sulfate **or** Magnesium Sulfate	Loss after 5 cycles: 12% maximum using Sodium sulfate - or - 18% maximum using magnesium sulfate	ASTM C88
Clay lumps and friable particles	0.3% maximum	ASTM C142
Percentage of Fractured Particles	For pavements designed for aircraft gross weights of 60,000 pounds or more: Minimum 75% by weight of particles with at least two fractured faces and 85% with at least one fractured face[1]	ASTM D5821
Flat, Elongated, or Flat and Elongated Particles	8% maximum, by weight, of flat, elongated, or flat and elongated particles at 5:1 [2]	ASTM D4791

[1] The area of each face shall be equal to at least 75% of the smallest mid-sectional area of the piece. When two fractured faces are contiguous, the angle between the planes of fractures shall be at least 30 degrees to count as two fractured faces.

[2] A flat particle is one having a ratio of width to thickness greater than 5; an elongated particle is one having a ratio of length to width greater than 5.

b. Fine aggregate. Fine aggregate shall consist of clean, sound, tough, durable, angular-shaped particles produced by crushing stone or gravel and shall be free from coatings of clay, silt, or other objectionable matter. Natural (non-manufactured) sand may be used to obtain the gradation of the fine aggregate blend or to improve the workability of the mix. Fine aggregate material requirements are listed in the table:

Fine Aggregate Material Requirements

Material Test	Requirement	Standard
Liquid limit	25 maximum	ASTM D4318
Plasticity Index	4 maximum	ASTM D4318
Soundness of Aggregates by Use of Sodium Sulfate **or** Magnesium Sulfate	Loss after 5 cycles: 10% maximum using Sodium sulfate - or - 15% maximum using magnesium sulfate	ASTM C88
Clay lumps and friable particles	0.3% maximum	ASTM C142
Sand equivalent	45 minimum	ASTM D2419
Natural Sand	0% to 8% maximum by weight of total aggregate	ASTM D1073

c. Sampling. ASTM D75 shall be used in sampling coarse and fine aggregate.

401-2.2 Mineral filler. Mineral filler (baghouse fines) may be added in addition to material naturally present in the aggregate. Mineral filler shall meet requirements of ASTM D242.

Mineral Filler Requirements

Material Test	Requirement	Standard
Plasticity Index	4 maximum	ASTM D4318

401-2.3 Asphalt binder. Asphalt binder shall conform to ASTM D6373 Performance Grade (PG) 76-22.

Asphalt Binder PG Plus Test Requirements

Material Test	Requirement	Standard
Elastic Recovery	75% minimum	ASTM D6084[1]

[1] Follow procedure B on RTFO aged binder.

401-2.4 Anti-stripping agent. Any anti-stripping agent or additive (anti-strip) shall be heat stable and shall not change the asphalt binder grade beyond specifications. Anti-strip shall be an approved material of the Department of Transportation of the State in which the project is located.

COMPOSITION

401-3.1 Composition of mixture(s). Asphalt mix shall be composed of a mixture of aggregates, filler and anti-strip agent if required, and asphalt binder. The aggregate fractions shall be sized, handled in separate size groups, and combined in such proportions that the resulting mixture meets the grading requirements of job mix formula (JMF).

401-3.2 Job mix formula (JMF) laboratory. Laboratory used to develop JMF shall possess a current certificate of accreditation, listing D3666 from a national accrediting authority and all test methods required for developing JMF; and be listed on the accrediting authority's website. A copy of the laboratory's current accreditation and accredited test methods shall be submitted to Engineer prior to start of construction.

401-3.3 Job mix formula (JMF). No asphalt mixture shall be placed until an acceptable mix design has been submitted to Engineer for review and accepted in writing. Engineer review shall not relieve Contractor of the responsibility to select and proportion the materials to comply with this section.

When the project requires asphalt mixtures of differing aggregate gradations and/or binders, a separate JMF shall be submitted for each mix. Add anti-stripping agent to meet tensile strength requirements.

JMF shall be prepared by an accredited laboratory that meets the requirements of paragraph 401-3.2. Asphalt mixture shall be designed using procedures contained in Asphalt Institute MS-2 Mix Design

Manual, 7th Edition. Samples shall be prepared and compacted using gyratory compactor in accordance with ASTM D6925.

Should a change in sources of materials be made, a new JMF must be submitted to Engineer for review and accepted in writing before the new material is used. After initial production JMF has been approved by Engineer and a new or modified JMF is required for whatever reason, the subsequent cost of the new or modified JMF, including a new control strip when required by Engineer, will be borne by Contractor.

Engineer may request samples at any time for testing, prior to and during production, to verify material quality and ensure conformance with applicable specifications.

JMF shall be submitted in writing by Contractor at least 30 days prior to the start of paving operations. JMF shall be developed within the same construction season using aggregates proposed for project use.

JMF shall be dated, and stamped or sealed by the responsible professional Engineer of the laboratory and shall include the following items as a minimum:

- Manufacturer's Certificate of Analysis (COA) for the asphalt binder used in JMF in accordance with paragraph 401-2.3. Certificate of asphalt performance grade is with modifier already added, if used and must indicate compliance with ASTM D6373. For plant modified asphalt binder, certified test report indicating grade certification of modified asphalt binder.
- Manufacturer's Certificate of Analysis (COA) for the anti-stripping agent if used in JMF in accordance with paragraph 401-2.4.
- Certified material test reports for the course and fine aggregate and mineral filler in accordance with paragraphs 401-2.1.
- Percent passing each sieve size for individual gradation of each aggregate cold feed and/or hot bin; percent by weight of each cold feed and/or hot bin used; and the total combined gradation in JMF.
- Specific Gravity and absorption of each coarse and fine aggregate.
- Percent natural sand.
- Percent fractured faces.
- Percent by weight of flat particles, elongated particles, as well as flat and elongated particles (and criteria).
- Percent of asphalt.
- Number of blows or gyrations
- Laboratory mixing and compaction temperatures.
- Supplier-recommended field mixing and compaction temperatures.
- Plot of the combined gradation on a 0.45 power gradation curve.
- Graphical plots of air voids, voids in the mineral aggregate (VMA), and unit weight versus asphalt content. To achieve minimum VMA during production, the mix design needs to account for material breakdown during production.
- Tensile Strength Ratio (TSR).
- Type and amount of Anti-strip agent when used.
- Asphalt Pavement Analyzer (APA) results.
- Date the JMF was developed. Mix designs that are not dated or which are from a prior construction season shall not be accepted.

Table 1. Asphalt Design Criteria

Test Property	Value	Test Method
Number of blows or gyrations	75	
Air voids (%)	3.5	ASTM D3203
Percent voids in mineral aggregate (VMA), minimum	See Table 2	ASTM D6995
Tensile Strength Ratio (TSR)[1]	not less than 80 at a saturation of 70-80%	ASTM D4867
Asphalt Pavement Analyzer (APA)[2]	Less than 10 mm @ 4000 passes	AASHTO T340 at 250 psi hose pressure at 64°C test temperature

[1] Test specimens for TSR shall be compacted at 7 ±1.0 % air voids. In areas subject to freeze-thaw, use freeze-thaw conditioning in lieu of moisture conditioning per ASTM D4867.

[2] AASHTO T340 at 100 psi hose pressure at 64°C test temperature may be used in the interim. If this method is used the required Value shall be less than 5 mm @ 8000 passes

Mineral aggregate shall be sized so percentage composition by weight, as determined by laboratory sieves, will conform to gradation(s) specified in Table 2 when tested in accordance with ASTM C136 and C117.

Table 2 gradations represent limits that shall determine the suitability of aggregate for use from sources of supply; be well graded from coarse to fine and shall not vary from the low limit on one sieve to the high limit on the adjacent sieve, or vice versa.

Table 2. Aggregate - Asphalt Pavements

Sieve Size	Percentage by Weight Passing Sieve
1 inch	
3/4 inch	100
1/2 inch	90-100
3/8 inch	72-88
No. 4	53-73
No. 8	38-60
No. 16	26-48
No. 30	18-38
No. 50	11-27
No. 100	6-18
No. 200	3-6
Minimum Voids in Mineral Aggregate (VMA)[1]	15
Asphalt Percent:	
Stone or gravel	5.0-7.5
Recommended Minimum Construction Lift Thickness	2 inches

[1]To achieve minimum VMA during production, the mix design needs to account for material breakdown during production.

Aggregate gradations shown are based on aggregates of uniform specific gravity. Percentages passing various sieves shall be corrected when aggregates of varying specific gravities are used, as indicated in Asphalt Institute MS-2 Mix Design Manual, 7th Edition.

401-3.4 Reclaimed **Asphalt Pavement** (RAP). Not used.

401-3.5 Control Strip. Full production shall not begin until an acceptable control strip has been constructed and accepted in writing by Engineer. Contractor shall prepare and place a quantity of asphalt according to

JMF. The underlying grade or pavement structure upon which the control strip is to be constructed shall be the same as the remainder of the course represented by the control strip.

Contractor will not be allowed to place control strip until Contractor quality control program (CQCP), showing conformance with requirements of paragraph 401-5.1, has been accepted, in writing, by Engineer.

Control strip will consist of at least 250 tons or 1/2 sublot, whichever is greater. Control strip shall be placed in two lanes of the same width and depth to be used in production with a longitudinal cold joint. Cold joint must be cut back in accordance with paragraph 401-4.14 using the same procedure used during production. Cold joint for the control strip will be an exposed construction joint at least four hours old or when mat cools to less than 160°F. Equipment used in construction of the control strip shall be same type, configuration, and weight to be used on Project.

Control strip will be considered acceptable by Engineer if gradation, asphalt content, and VMA are within action limits specified in paragraph 401-5.5a; and Mat density, air voids, and joint density meet requirements specified in paragraphs 401-6.2.

If control strip is unacceptable, necessary adjustments to JMF, plant operation, placing procedures, and/or rolling procedures shall be made and another control strip shall be placed. Unacceptable control strips shall be removed at Contractor expense.

Control strip will be considered one lot for payment based upon average of three, at minimum, samples (no sublots required for control strip). Payment will only be made for an acceptable control strip in accordance with paragraph 401-8.1 using a lot pay factor equal to 100.

CONSTRUCTION METHODS

401-4.1 Weather limitations. Asphalt shall not be placed upon a wet surface or when surface temperature of underlying course is less than specified in Table 4. Temperature requirements may be waived by Engineer, if requested; however, all other requirements including compaction shall be met.

Table 4. Surface Temperature Limitations of Underlying Course

Mat Thickness	Base Temperature (Minimum)	
	°F	°C
3 inches or greater	40 [1]	4
Greater than 2 inches but less than 3 inches	45	7

401-4.2 Asphalt plant. Plants used for the preparation of asphalt shall conform to requirements of American Association of State Highway and Transportation Officials (AASHTO) M156 including:

a. Inspection of plant. RPR and Engineer, (or authorized representative), shall have access, at all times, to all areas of plant for checking adequacy of equipment; inspecting operation of plant: verifying weights, proportions, and material properties; and checking temperatures maintained in preparation of mixtures.

b. Storage bins and surge bins. Asphalt mixture stored in storage/surge bins shall meet same requirements as asphalt mixture loaded directly into trucks. Asphalt mixture shall not be stored in storage/surge bins for greater than 12 hours. If RPR/Engineer determines there is an excessive heat loss, segregation, or oxidation of asphalt mixture due to temporary storage, temporary storage shall not be allowed.

401-4.3 Aggregate stockpile management. Aggregate stockpiles shall be constructed in a manner that prevents segregation and intermixing of deleterious materials. Aggregates from different sources shall be stockpiled, weighed, and batched separately at the asphalt batch plant. Aggregates that have become segregated or mixed with earth or foreign material shall not be used.

A continuous supply of materials shall be provided to the work to ensure continuous placement.

401-4.4 Hauling equipment. Trucks used for hauling asphalt shall have tight, clean, and smooth metal beds. To prevent the asphalt from sticking to the truck beds, the truck beds shall be lightly coated with a minimum amount of paraffin oil, lime solution, or other material approved by Engineer. Petroleum products shall not be used for coating truck beds. Each truck shall have a suitable cover to protect the mixture from adverse weather. When necessary, to ensure that the mixture will be delivered to the site at the specified temperature, truck beds shall be insulated or heated and covers shall be securely fastened.

401-4.4.1 Material transfer vehicle (MTV). Material transfer vehicles used to transfer the material from the hauling equipment to the paver, shall use a self-propelled, material transfer vehicle with a swing conveyor that can deliver material to the paver without making contact with the paver. MTV shall be able to move back and forth between the hauling equipment and the paver providing material transfer to the paver, while allowing the paver to operate at a constant speed. MTV will have remixing and storage capability to prevent physical and thermal segregation.

401-4.5 Asphalt pavers. Asphalt pavers shall be self-propelled with an activated heated screed, capable of spreading and finishing courses of asphalt that will meet specified thickness, smoothness, and grade. Paver shall have sufficient power to propel itself and hauling equipment without adversely affecting finished surface. Asphalt paver shall be equipped with a control system capable of automatically maintaining specified screed grade and elevation.

If spreading and finishing equipment in use leaves tracks or indented areas or produces other blemishes in pavement not satisfactorily corrected by scheduled operations, use of such equipment shall be discontinued.

Paver shall be capable of paving to a minimum width specified in paragraph 401-4.12.

401-4.6 Rollers. Number, type, and weight of rollers shall be sufficient to compact the asphalt to the required density while it is still in a workable condition without crushing of the aggregate, depressions, or other damage to the pavement surface. Rollers shall be in good condition, clean, and capable of operating at slow speeds to avoid displacement of the asphalt. All rollers shall be specifically designed and suitable for compacting asphalt concrete and shall be properly used. Rollers that impair the stability of any layer of a pavement structure or underlying soils shall not be used.

401-4.7 Density device. Contractor shall have on site a density gauge during all paving operations in order to assist in the determination of the optimum rolling pattern, type of roller, and frequencies, as well as to monitor the effect of the rolling operations during production paving. Contractor shall supply a qualified technician during all paving operations to calibrate the gauge and obtain accurate density readings for all new asphalt. These densities shall be supplied to RPR upon request at any time during construction. No separate payment will be made for supplying the density gauge and technician.

401-4.8 Preparation of asphalt binder. Asphalt binder shall be heated in a manner that will avoid local overheating and provide a continuous supply of the asphalt binder to the mixer at a uniform temperature. Temperature of unmodified asphalt binder delivered to the mixer shall be sufficient to provide a suitable viscosity for adequate coating of the aggregate particles but shall not exceed 325°F when added to aggregate. Temperature of modified asphalt binder shall be no more than 350°F when added to aggregate.

401-4.9 Preparation of mineral aggregate. Aggregate for the asphalt shall be heated and dried. Maximum temperature and rate of heating shall be such that no damage occurs to the aggregates. Temperature of the aggregate and mineral filler shall not exceed 350°F when the asphalt binder is added. Take care so aggregates high in calcium or magnesium content are not damaged by overheating. Temperature shall not be lower than is required to obtain complete coating and uniform distribution on the aggregate particles and to provide a mixture of satisfactory workability.

401-4.10 Preparation of Asphalt mixture. Aggregates and the asphalt binder shall be weighed or metered and mixed in the amount specified by JMF. Combined materials shall be mixed until the aggregate obtains

a uniform coating of asphalt binder and is thoroughly distributed throughout the mixture. Wet mixing time shall be the shortest time that will produce a satisfactory mixture, but not less than 25 seconds for batch plants. Wet mixing time for all plants shall be established by Contractor, based on the procedure for determining the percentage of coated particles described in ASTM D2489, for each individual plant and for each type of aggregate used. Wet mixing time will be set to achieve 95% of coated particles. For continuous mix plants, the minimum mixing time shall be determined by dividing the weight of its contents at operating level by the weight of the mixture delivered per second by the mixer. Moisture content of all asphalt upon discharge shall not exceed 0.5%.

401-4.11 Application of Prime and Tack Coat. Immediately before placing asphalt mixture, clean underlying course of all dust and debris.

Apply prime coat in accordance with Item P-602 to aggregate base prior to placing asphalt mixture.

Apply tack coat in accordance with Item P-603 to all vertical and horizontal asphalt and concrete surfaces prior to placement of the first and each subsequent lift of asphalt mixture.

401-4.12 Laydown plan, transporting, placing, and finishing. Prior to asphalt placement, Contractor shall prepare a laydown plan with the sequence of paving lanes and width to minimize the number of cold joints; the location of any temporary ramps; laydown temperature; and estimated time of completion for each portion of the work (milling, paving, rolling, cooling, etc.). The laydown plan and any modifications shall be approved by RPR and Engineer.

Deliveries shall be scheduled so that placing and compacting of asphalt is uniform with minimum stopping and starting of the paver. Hauling over freshly placed material shall not be permitted until the material has been compacted, as specified, and allowed to cool to approximately ambient temperature. Contractor, at their expense, shall be responsible for repair of any damage to the pavement caused by hauling operations.

Contractor shall survey each lift of asphalt surface course and certify to RPR/Engineer that every lot of each lift meets the grade tolerances of paragraph 401-6.2d before the next lift can be placed.

Edges of existing asphalt pavement abutting new work shall be saw cut and the cut off material and laitance removed. Apply a tack coat in accordance with P-603 before new asphalt material is placed against it.

Speed of the paver shall be regulated to eliminate pulling and tearing asphalt mat. Placement of asphalt mix shall begin along centerline of a crowned section or on the high side of areas with a one-way slope unless shown otherwise on the laydown plan as accepted by RPR and Engineer. Asphalt mix shall be placed in consecutive adjacent lanes having a minimum width of 10 feet except where edge lanes require less width to complete area. Additional screed sections attached to widen the paver to meet the minimum lane width requirements must include additional auger sections to move the asphalt mixture uniformly along screed extension.

Longitudinal joint in one course shall offset the longitudinal joint in the course immediately below by at least 1 foot; however, joint in surface top course shall be at the centerline of crowned pavements. Transverse joints in one course shall be offset by at least 10 feet from transverse joints in the previous course. Transverse joints in adjacent lanes shall be offset a minimum of 10 feet. On areas where irregularities or unavoidable obstacles make the use of mechanical spreading and finishing equipment impractical, the asphalt may be spread and luted by hand tools.

RPR may at any time, reject any batch of asphalt, on the truck or placed in the mat, which is rendered unfit for use due to contamination, segregation, incomplete coating of aggregate, or overheated asphalt mixture. Such rejection may be based on only visual inspection or temperature measurements. In the event of such rejection, Contractor may take a representative sample of the rejected material in the presence of RPR, and if it can be demonstrated in the laboratory, in the presence of RPR, that such material was erroneously rejected, payment will be made for the material at the contract unit price.

Areas of segregation in the surface course, as determined by RPR, shall be removed and replaced at Contractor's expense. Area shall be removed by saw cutting and milling a minimum of the construction lift thickness as specified in paragraph 401-3.3, Table 2 for the approved mix design. Area to be removed and replaced shall be a minimum width of the paver and a minimum of 10 feet long.

401-4.13 Compaction of asphalt mixture. After placing, asphalt mixture shall be thoroughly and uniformly compacted by self-propelled rollers. Surface shall be compacted as soon as possible when asphalt has attained sufficient stability so rolling does not cause undue displacement, cracking or shoving. Sequence of rolling operations and the type of rollers used shall be at the discretion of Contractor. Speed of roller shall, at all times, be sufficiently slow to avoid displacement of the hot mixture and be effective in compaction. Any surface defects/displacement occurring as a result of roller, or another cause, shall be corrected at Contractor expense.

Sufficient rollers shall be furnished to handle output of plant. Rolling shall continue until the surface is of uniform texture, true to grade and cross-section, and required field density is obtained. To prevent adhesion of asphalt to roller, the wheels shall be equipped with a scraper and kept moistened with water as necessary.

In areas not accessible to roller, mixture shall be thoroughly compacted with approved power tampers.

Any asphalt that becomes loose and broken, mixed with dirt, contains check-cracking, or in any way defective shall be removed and replaced with fresh hot mixture and immediately compacted to conform to the surrounding area. This work shall be done at Contractor's expense. Skin patching shall not be allowed.

401-4.14 Joints. The formation of all joints shall be made to ensure a continuous bond between the courses and obtain the required density. All joints shall have the same texture as other sections of the course and meet the requirements for smoothness and grade.

The roller shall not pass over the unprotected end of the freshly laid asphalt except when necessary to form a transverse joint. When necessary to form a transverse joint, it shall be made by means of placing a bulkhead or by tapering the course. Tapered edge shall be cut back to its full depth and width on a straight line to expose a vertical face prior to placing the adjacent lane. In both methods, all contact surfaces shall be coated with an asphalt tack coat before placing any fresh asphalt against the joint.

Longitudinal joints which have been left exposed for more than four hours; the surface temperature has cooled to less than 175°F; or are irregular, damaged, uncompacted or otherwise defective shall be cut back with a cutting wheel or pavement saw a maximum of 3 inches to expose a clean, sound, uniform vertical surface for the full depth of the course. All cutback material and any laitance produced from cutting joints shall be removed from the project. Asphalt tack coat in accordance with P-603 shall be applied to the clean, dry joint prior to placing any additional fresh asphalt against the joint. The cost of this work shall be considered incidental to the cost of the asphalt.

401-4.15 Saw-cut grooving. Not required.

401-4.16 Diamond grinding. Diamond grinding shall be completed prior to pavement grooving. Diamond grinding shall be accomplished by sawing with saw blades impregnated with industrial diamond abrasive.

Diamond grinding shall be performed with a machine designed specifically for diamond grinding capable of cutting a path at least 3 feet wide. The saw blades shall be 1/8-inch wide with a sufficient number of blades to create grooves 0.090-0.130 inch wide; and peaks and ridges approximately 1/32 inch higher than the bottom of the grinding cut. The actual number of blades will be determined by Contractor and depend on the hardness of the aggregate. Equipment or grinding procedures that cause ravels, aggregate fractures, spalls or disturbance to the pavement will not be permitted. Contractor shall demonstrate to RPR that the grinding equipment will produce satisfactory results prior to making corrections to surfaces. Grinding will be tapered in all directions to provide smooth transitions to areas not requiring grinding. Slurry resulting from the grinding operation shall be continuously removed and the pavement left in a clean condition. Contractor shall apply a surface treatment per P-608 to all areas that have been subject to grinding.

401-4.17 Nighttime paving requirements. Contractor shall provide adequate lighting during any nighttime construction. A lighting plan shall be submitted by Contractor and approved by Construction Manager before start of any nighttime work. All work shall be in accordance with approved CSPP and lighting plan.

CONTRACTOR QUALITY CONTROL (CQC)

401-5.1 General. Contractor shall develop a Contractor Quality Control Program (CQCP) in accordance with Item C-100. No partial payment will be made for materials without an approved CQCP.

401-5.2 Contractor quality control (QC) facilities. Contractor shall provide or contract for testing facilities in accordance with Item C-100. Permit RPR unrestricted access to inspect Contractor's QC facilities and witness QC activities. RPR will advise Contractor in writing of any noted deficiencies concerning the QC facility, equipment, supplies, or testing personnel and procedures. When the deficiencies are serious enough to be adversely affecting the test results, the incorporation of materials into work shall be suspended immediately and not permitted to resume until the deficiencies are satisfactorily corrected.

401-5.3 Contractor QC testing. Contractor shall perform all QC tests necessary to control the production and construction processes applicable to these specifications and as set forth in the approved CQCP. Testing program shall include, but not necessarily be limited to, tests for the control of asphalt content, aggregate gradation, temperatures, aggregate moisture, field compaction, and surface smoothness. QC Testing Plan shall be developed as part of CQCP.

a. Asphalt content. A minimum two tests shall be performed per day in accordance with ASTM D6307 or D2172 for determination of asphalt content. When using ASTM D6307, correction factor shall be determined as part of the first test performed at the beginning of plant production; and as part of every tenth test performed thereafter. Asphalt content for the day will be determined by averaging test results.

b. Gradation. Aggregate gradations shall be determined a minimum of twice per day from mechanical analysis of extracted aggregate in accordance with ASTM D5444, C136, and C117.

c. Moisture content of aggregate. Moisture content of aggregate used for production shall be determined a minimum of once per day in accordance with ASTM C566.

d. Moisture content of asphalt. Moisture content shall be determined once per day in accordance with AASHTO T329 or ASTM D1461.

e. Temperatures. Temperatures shall be checked, at least four times per day, at necessary locations to determine the temperatures of the dryer, the asphalt binder in the storage tank, the asphalt at the plant, and the asphalt at the job site.

f. In-place density monitoring. Contractor shall conduct any necessary testing to ensure specified density is being achieved. A nuclear gauge may be used to monitor the pavement density in accordance with ASTM D2950.

g. Smoothness for Contractor Quality Control.

Contractor shall perform smoothness testing in transverse and longitudinal directions daily to verify construction processes are producing pavement with variances less than 1/4 inch in 12 feet, identifying areas that may pond water which could lead to hydroplaning of aircraft. If smoothness criteria is not met, appropriate changes and corrections to the construction process shall be made by Contractor before construction continues

Contractor may use a 12-foot straightedge, rolling inclinometer meeting requirements of ASTM E2133 or rolling external reference device that can simulate a 12-foot straightedge approved by RPR. Straight-edge testing shall start with half the length of straightedge at edge of pavement section tested then moved

ahead half the length of straightedge for each successive measurement. Testing shall be continuous across all joints. Surface irregularity shall be determined by placing the freestanding (unleveled) straightedge on the pavement surface and allowing it to rest upon the two highest spots covered by its length and measuring the maximum gap between the straightedge and the pavement surface in the area between the two high points. If rolling inclinometer or external reference device is used, the data may be evaluated using either FAA profile program, ProFAA, or FHWA ProVal, using 12-foot straightedge simulation function.

Smoothness readings shall not be made across grade changes or cross slope transitions. Transition between new and existing pavement shall be evaluated separately for conformance with the plans.

(1) Transverse measurements. Transverse measurements shall be taken for each day's production placed. Transverse measurements shall be taken perpendicular to the pavement centerline each 50 feet or more often as determined by RPR. Joint between lanes shall be tested separately to facilitate smoothness between lanes.

(2) Longitudinal measurements. Longitudinal measurements shall be taken for each day's production placed. Longitudinal tests shall be parallel to the centerline of paving; at the center of paving lanes when widths of paving lanes are less than 20 feet; and at the third points of paving lanes when widths of paving lanes are 20 feet or greater.

Deviations on the final surface course in either the transverse or longitudinal direction that will trap water greater than 1/4 inch shall be corrected with diamond grinding per paragraph 401-4.16 or by removing and replacing the surface course to full depth. Grinding shall be tapered in all directions to provide smooth transitions to areas not requiring grinding. All areas in which diamond grinding has been performed shall be subject to the final pavement thickness tolerances specified in paragraph 401-6.1d(3). Areas that have been ground shall be sealed with a surface treatment in accordance with Item P-608. To avoid the surface treatment creating any conflict with runway or taxiway markings, it may be necessary to seal a larger area.

Control charts shall be kept to show area of each day's placement and the percentage of corrective grinding required. Corrections to production and placement shall be initiated when corrective grinding is required. If Contractor's machines and/or methods produce significant areas that need corrective actions in excess of 10 percent of a day's production, production shall be stopped until corrective measures are implemented by Contractor.

h. Grade. Grade shall be evaluated daily to allow adjustments to paving operations when grade measurements do not meet specifications. As a minimum, grade shall be evaluated prior to and after the placement of the first lift and after placement of the surface lift.

Measurements will be taken at appropriate gradelines (as a minimum at center and edges of paving lane) and longitudinal spacing as shown on cross-sections and plans. The final surface of the pavement will not vary from the gradeline elevations and cross-sections shown on the plans by more than 1/2 inch vertically and 0.1 feet laterally. Contractor will provide documentation to RPR by the end of the following working day.

Areas with humps or depressions that exceed grade or smoothness criteria and that retain water on the surface must be ground off provided the course thickness after grinding is not more than 1/2 inch less than the thickness specified on the plans. Grinding shall be in accordance with paragraph 401-4.16.

Contractor shall repair low areas or areas that cannot be corrected by grinding by removal of deficient areas to depth of final course plus 0.5 inch and replacing with new material. Skin patching is not allowed.

401-5.4 Sampling. When directed by Engineer, Contractor shall sample and test any material that appears inconsistent with similar material being sampled, unless such material is voluntarily removed and replaced or deficiencies corrected by Contractor. All sampling shall be in accordance with standard procedures specified.

401-5.5 Control charts. Contractor shall maintain linear control charts for both individual measurements and range (i.e. difference between highest and lowest measurements) for aggregate gradation, asphalt content, and VMA. VMA for each day will be calculated and monitored by the QC laboratory.

Control charts shall be posted in a location satisfactory to RPR and kept current. At minimum, control charts shall identify project number, contract item number, test number, each test parameter, Action and Suspension Limits applicable to each test parameter, and Contractor's test results. Contractor shall use the control charts as part of a process control system for identifying potential problems and assignable causes before they occur. If Contractor's projected data during production indicates a problem and Contractor is not taking satisfactory corrective action, RPR may suspend production or acceptance of the material.

a. Individual measurements. Control charts for individual measurements shall be established to maintain process control within tolerance for aggregate gradation, asphalt content, and VMA. Control charts shall use the job mix formula target values as indicators of central tendency for the following test parameters with associated Action and Suspension Limits:

Control Chart Limits for Individual Measurements

Sieve	Action Limit	Suspension Limit
3/4 inch	±6%	±9%
1/2 inch	±6%	±9%
3/8 inch	±6%	±9%
No. 4	±6%	±9%
No. 16	±5%	±7.5%
No. 50	±3%	±4.5%
No. 200	±2%	±3%
Asphalt Content	±0.45%	±0.70%
Minimum VMA	-0.5%	-1.0%

b. Range. Control charts shall be established to control gradation process variability. Range shall be plotted as difference between two test results for each control parameter. Suspension Limits specified are based on a sample size of n = 2. Should Contractor elect to perform more than two tests per lot, Suspension Limits shall be adjusted by multiplying the Suspension Limit by 1.18 for n = 3 and by 1.27 for n = 4.

Control Chart Limits Based on Range

Sieve	Suspension Limit
1/2 inch	11%
3/8 inch	11%
No. 4	11%
No. 16	9%
No. 50	6%
No. 200	3.5%
Asphalt Content	0.8%

c. Corrective Action. CQCP shall indicate that appropriate action shall be taken when the process is believed to be out of tolerance. Plan shall contain rules to gauge when a process is out of control and detail what action will be taken to bring the process into control. As a minimum, a process shall be deemed out of control and production stopped and corrective action taken, if:

(1) One point falls outside the Suspension Limit line for individual measurements or range; or
(2) Two points in a row fall outside the Action Limit line for individual measurements.

401-5.6 QC reports. Contractor shall maintain records and shall submit reports of QC activities daily in accordance with Item C-100.

MATERIAL ACCEPTANCE

401-6.1 Acceptance sampling and testing. Unless otherwise specified, all acceptance sampling and testing necessary to determine conformance with requirements specified herein will be performed by Engineer at no cost to Contractor except coring as required shall be completed and paid for by Contractor.

a. Quality assurance (QA) testing laboratory. QA testing laboratory performing these acceptance tests will be accredited in accordance with ASTM D3666. QA laboratory accreditation will be current and listed on the accrediting authority's website. All test methods required for acceptance sampling and testing will be listed on the lab accreditation.

b. Lot size. A standard lot will be equal to one day's production divided into approximately equal sublots of between 400-600 tons. When only one or two sublots are produced in a day's production, the sublots will be combined with the production lot from the previous or next day.

Where more than one plant is simultaneously producing asphalt for the job, lot sizes will apply separately for each plant.

c. Asphalt air voids. Plant-produced asphalt will be tested for air voids on a sublot basis.

(1) Sampling. Material from each sublot shall be sampled in accordance with ASTM D3665. Samples shall be taken from material deposited into trucks at the plant or at the job site in accordance with ASTM D979. Sample of asphalt may be put in a covered metal tin and placed in an oven for not less than 30 nor more than 60 minutes to maintain material at or above compaction temperature as specified in JMF.

(2) Testing. Air voids will be determined for each sublot in accordance with ASTM D3203 for a set of compacted specimens prepared in accordance with ASTM D6925.

d. In-place asphalt mat and joint density. Each sublot will be tested for in-place mat and joint density as a percentage of the theoretical maximum density (TMD).

(1) Sampling. Contractor will cut minimum 4- or 6-inch-diameter samples in accordance with ASTM D5361. Contractor shall furnish all tools, labor, and materials for cleaning, and filling the cored pavement. Laitance produced by the coring operation shall be removed immediately after coring, and core holes shall be filled within one day after sampling in a manner acceptable to RPR.

(2) Bond. Each lift of asphalt shall be bonded to the underlying layer. If cores reveal that the surface is not bonded, additional cores shall be taken as directed by RPR/Engineer to determine the extent of unbonded areas. Unbonded areas shall be removed by milling and replaced at no additional cost as directed by Engineer.

(3) Thickness. Thickness of each lift of surface course will be evaluated by Engineer for compliance to the requirements shown on the plans after any necessary corrections for grade. Measurements of thickness will be made using the cores extracted for each sublot for density measurement. The maximum allowable deficiency at any point will not be more than 1/4 inch less than the thickness indicated for the lift. Average thickness of lift, or combined lifts, will not be less than the indicated thickness. Where the thickness tolerances are not met, the lot or sublot shall be corrected by Contractor at his expense by removing the deficient area and replacing with new pavement. Contractor, at his expense, may take additional cores as approved by Engineer to circumscribe the deficient area.

(4) Mat density. One core shall be taken from each sublot. Core locations will be determined by RPR in accordance with ASTM D3665. Cores for mat density shall not be taken closer than 1 foot from a transverse or longitudinal joint. Bulk specific gravity of each cored sample will be determined in accordance with ASTM D2726. Percent compaction (density) of each sample will be determined by dividing the bulk specific gravity of each sublot sample by TMD for that sublot.

(5) Joint density. One core centered over the longitudinal joint shall be taken for each sublot that has a longitudinal joint. Core locations will be determined by RPR in accordance with ASTM D3665. Bulk specific gravity of each core sample will be determined in accordance with ASTM D2726. Percent

compaction (density) of each sample will be determined by dividing the bulk specific gravity of each joint density sample by average TMD for the lot. TMD used to determine joint density at joints formed between lots will be lower of average TMD values from adjacent lots.

401-6.2 Acceptance criteria.

a. General. Acceptance will be based on implementation of Contractor Quality Control Program (CQCP) and the following characteristics of the asphalt and completed pavements: air voids, mat density, joint density, and grade and Profilograph roughness**.**

b. Air Voids and Mat density. Acceptance of each lot of plant produced material for mat density and air voids will be based on the percentage of material within specification limits (PWL). If PWL of lot equals or exceeds 90%, lot will be acceptable. Acceptance and payment will be determined in accordance with paragraph 401-8.1.

c. Joint density. Acceptance of each lot of plant produced asphalt for joint density will be based on the PWL. If the PWL of the lot is equal to or exceeds 90%, the lot will be considered acceptable. If PWL is less than 90%, Contractor shall evaluate the reason and act accordingly. If PWL is less than 80%, Contractor shall cease operations and until the reason for poor compaction has been determined. If PWL is less than 71%, the pay factor for the lot used to complete the joint will be reduced by 5 percentage points. This lot pay factor reduction will be incorporated and evaluated in accordance with paragraph 401-8.1.

d. Grade. Final finished surface of the pavement shall be surveyed to verify that the grade elevations and cross-sections shown on the plans do not deviate more than 1/2 inch vertically or 0.1 feet laterally.

Cross-sections of pavement shall be taken at a minimum 50-footlongitudinal spacing and at all longitudinal grade breaks. Minimum cross-section grade points shall include grade at centerline, ±10 feet of centerline, edge of taxiway pavement, TSA boundary, and TOFA boundary.

The survey and documentation shall be stamped and signed by a licensed surveyor. Payment for sublots that do not meet grade for over 25% of the sublot shall not be more than 95%.

e. Profilograph roughness for QA Acceptance. Final profilograph shall be full length of project to facilitate testing of roughness between lots. Contractor, in the presence of RPR, shall perform a profilograph roughness test on the completed project with a profilograph meeting the requirements of ASTM E1274 or a Class I inertial profiler meeting ASTM E950. Data and results shall be provided within 48 hours of profilograph roughness tests.

The pavement shall have an average profile index less than 15 inches per mile per 1/10 mile. The equipment shall utilize electronic recording and automatic computerized reduction of data to indicate “must grind” bumps and the Profile Index for the pavement using a 0.2-inch blanking band. The bump template must span 1 inch with an offset of 0.4 inches. The profilograph must be calibrated prior to use and operated by a factory or State DOT approved, trained operator. Profilograms shall be recorded on a longitudinal scale of 1 inch equals 25 feet and a vertical scale of 1 inch equals 1 inch. Profilograph shall be performed 1 foot right and left of project centerline and 15 feet right and left of project centerline. Any areas that indicate “must grind” shall be corrected with diamond grinding per paragraph 401-4.16 or by removing and replacing full depth of surface course. as directed by RPR. Where corrections are necessary, a second profilograph run shall be performed to verify that the corrections produced an average profile index of 15 inches per mile per 1/10 mile or less.

401-6.3 Percentage of material within specification limits (PWL). PWL will be determined in accordance with procedures specified in Item C-110. Specification tolerance limits (L) for lower and (U) for upper are contained in Table 5.

Table 5. Acceptance Limits for Air Voids and Density

Test Property	Pavements Specification Tolerance Limits	
	L	U
Air Voids Total Mix (%)	2.0	5.0
Surface Course Mat Density (%)	92.8	-
Base Course Mat Density (%)	92.0	-
Joint density (%)	90.5	--

a. Outliers. All individual tests for mat density and air voids will be checked for outliers (test criterion) in accordance with ASTM E178, at a significance level of 5%. Outliers will be discarded, and the PWL will be determined using the remaining test values. The criteria in Table 5 is based on production processes which have a variability with the following standard deviations: Surface Course Mat Density (%), 1.20; Base Course Mat Density (%), 1.55; Joint Density (%), 1.8

Contractor should note 90 PWL is achieved when consistently producing: (1) a surface course with average mat density of at least 94% with 1.20% or less variability, (2) 90 PWL is achieved when consistently producing a base course with an average mat density of at least 93.5% with 1.8% or less variability, and (3) 90 PWL is achieved when consistently producing joints with an average joint density of at least 91% with 1.8% or less variability.

401-6.4 Resampling pavement for mat density.

a. General. Resampling of a lot of pavement will only be allowed for mat density, and then, only if Contractor requests same, in writing, within 48 hours after receiving the written test results from RPR. A retest will consist of all the sampling and testing procedures contained in paragraphs 401-6.1d and 401-6.2b. Only one resampling per lot will be permitted.

(1) Redefined PWL will be calculated for resampled lot. Number of tests used to calculate redefined PWL will include initial tests made for that lot plus retests.

(2) Cost for resampling and retesting shall be borne by Contractor.

b. Payment for resampled lots. Redefined PWL for a resampled lot will be used to calculate payment for that lot in accordance with Table 6.

c. Outliers. Check for outliers in accordance with ASTM E178, at a significance level of 5%.

METHOD OF MEASUREMENT

401-7.1 Measurement. Asphalt shall be measured by the number of tons of asphalt used in the accepted work. Batch weights or truck scale weights will be used to determine the basis for the tonnage.

BASIS OF PAYMENT

401-8.1 Payment. Payment for a lot of asphalt meeting all acceptance criteria as specified in paragraph 401-6.2 shall be made based on results of tests for mat density and air voids. Payment for acceptable lots shall be adjusted according to paragraph 401-8.1c for mat density and air voids; and paragraph 401-6.2c for joint density, subject to limitation that:

a. Total project payment for plant mix asphalt pavement shall not exceed 100% of the product of the contract unit price and the total number of tons of asphalt used in the accepted work.

b. Price shall be compensation for furnishing all materials, for all preparation, mixing, and placing of these materials, and for all labor, equipment, tools, and incidentals necessary to complete the item.

c. Basis of adjusted payment. Pay factor for each individual lot shall be calculated in accordance with Table 6. Pay factor shall be calculated for both mat density and air voids. Lot pay factor shall be the higher of the two values when calculations for both mat density and air voids are 100% or higher. Lot pay factor shall be the product of the two values when only one of the calculations for either mat density or air voids is 100% or higher. Lot pay factor shall be the lower of the two values when calculations for both mat density and air voids are less than 100%. If PWL for joint density is less than 71%, then lot pay factor shall be reduced by 5% but be no higher than 95%.

For each lot accepted, the adjusted contract unit price shall be the product of the lot pay factor for the lot and the contract unit price. Payment shall be subject to the total project payment limitation specified in paragraph 401-8.1a. Payment in excess of 100% for accepted lots of asphalt shall be used to offset payment for accepted lots of asphalt pavement that achieve a lot pay factor less than 100%.

Payment for sublots which do not meet grade in accordance with paragraph 401-6.2d after correction for over 25% of the sublot shall be reduced by 5%.

Table 6. Price adjustment schedule[1]

Percentage of material within specification limits (PWL)	Lot pay factor (percent of contract unit price)
96 – 100	103
90 – 95	PWL + 10
75 – 89	0.5 PWL + 55
55 – 74	1.4 PWL – 12
Below 55	Reject [2]

[1] Although theoretically possible to achieve a pay factor of 103% for each lot, actual payment above 100% shall be subject to the total project payment limitation specified in paragraph 401-8.1a.

[2] The lot shall be removed and replaced. However, Engineer may decide to allow the rejected lot to remain. In that case, if Engineer and Contractor agree in writing that the lot shall not be removed, it shall be paid for at 50% of the contract unit price and the total project payment shall be reduced by the amount withheld for the rejected lot.

d. Profilograph Roughness. Contractor will receive full payment when the profilograph average profile index is in accordance with paragraph 401-6.2e. When the final average profile index for the entire length of pavement does not exceed 15 inches per mile per 1/10 mile, payment will be made at the contract unit price for the completed pavement.

401-8.1 Payment.

Payment will be made under:

Item P-401-8.1a	Asphalt Surface Course Including Binder, 4-inch thickness, 2 lifts, complete per ton

REFERENCES

The publications listed below form a part of this specification to the extent referenced. The publications are referred to within the text by the basic designation only.

ASTM International (ASTM)

ASTM C29	Standard Test Method for Bulk Density (“Unit Weight”) and Voids in Aggregate
ASTM C88	Standard Test Method for Soundness of Aggregates by Use of Sodium Sulfate or Magnesium Sulfate
ASTM C117	Standard Test Method for Materials Finer than 75-µm (No. 200) Sieve in Mineral Aggregates by Washing

ASTM C127	Standard Test Method for Density, Relative Density (Specific Gravity) and Absorption of Coarse Aggregate
ASTM C131	Standard Test Method for Resistance to Degradation of Small-Size Coarse Aggregate by Abrasion and Impact in the Los Angeles Machine
ASTM C136	Standard Test Method for Sieve or Screen Analysis of Fine and Coarse Aggregates
ASTM C142	Standard Test Method for Clay Lumps and Friable Particles in Aggregates
ASTM C566	Standard Test Method for Total Evaporable Moisture Content of Aggregate by Drying
ASTM D75	Standard Practice for Sampling Aggregates
ASTM D242	Standard Specification for Mineral Filler for Bituminous Paving Mixtures
ASTM D946	Standard Specification for Penetration-Graded Asphalt Cement for Use in Pavement Construction
ASTM D979	Standard Practice for Sampling Asphalt Paving Mixtures
ASTM D1073	Standard Specification for Fine Aggregate for Asphalt Paving Mixtures
ASTM D1188	Standard Test Method for Bulk Specific Gravity and Density of Compacted Bituminous Mixtures Using Coated Samples
ASTM D2172	Standard Test Method for Quantitative Extraction of Bitumen from Asphalt Paving Mixtures
ASTM D1461	Standard Test Method for Moisture or Volatile Distillates in Asphalt Paving Mixtures
ASTM D2041	Standard Test Method for Theoretical Maximum Specific Gravity and Density of Bituminous Paving Mixtures
ASTM D2419	Standard Test Method for Sand Equivalent Value of Soils and Fine Aggregate
ASTM D2489	Standard Practice for Estimating Degree of Particle Coating of Bituminous-Aggregate Mixtures
ASTM D2726	Standard Test Method for Bulk Specific Gravity and Density of Non-Absorptive Compacted Bituminous Mixtures
ASTM D2950	Standard Test Method for Density of Bituminous Concrete in Place by Nuclear Methods
ASTM D3203	Standard Test Method for Percent Air Voids in Compacted Dense and Open Bituminous Paving Mixtures
ASTM D3381	Standard Specification for Viscosity-Graded Asphalt Cement for Use in Pavement Construction
ASTM D3665	Standard Practice for Random Sampling of Construction Materials
ASTM D3666	Standard Specification for Minimum Requirements for Agencies Testing and Inspecting Road and Paving Materials

ASTM D4318	Standard Test Methods for Liquid Limit, Plastic Limit, and Plasticity Index of Soils
ASTM D4552	Standard Practice for Classifying Hot-Mix Recycling Agents
ASTM D4791	Standard Test Method for Flat Particles, Elongated Particles, or Flat and Elongated Particles in Coarse Aggregate
ASTM D4867	Standard Test Method for Effect of Moisture on Asphalt Concrete Paving Mixtures
ASTM D5361	Standard Practice for Sampling Compacted Asphalt Mixtures for Laboratory Testing
ASTM D5444	Standard Test Method for Mechanical Size Analysis of Extracted Aggregate
ASTM D5821	Standard Test Method for Determining the Percentage of Fractured Particles in Coarse Aggregate
ASTM D6084	Standard Test Method for Elastic Recovery of Bituminous Materials by Ductilometer
ASTM D6307	Standard Test Method for Asphalt Content of Hot Mix Asphalt by Ignition Method
ASTM D6373	Standard Specification for Performance Graded Asphalt Binder
ASTM D6752	Standard Test Method for Bulk Specific Gravity and Density of Compacted Bituminous Mixtures Using Automatic Vacuum Sealing Method
ASTM D6925	Standard Test Method for Preparation and Determination of the Relative Density of Hot Mix Asphalt (HMA) Specimens by Means of the SuperPave Gyratory Compactor.
ASTM D6926	Standard Practice for Preparation of Bituminous Specimens Using Marshall Apparatus
ASTM D6927	Standard Test Method for Marshall Stability and Flow of Bituminous Mixtures
ASTM D6995	Standard Test Method for Determining Field VMA based on the Maximum Specific Gravity of the Mix (Gmm)
ASTM E11	Standard Specification for Woven Wire Test Sieve Cloth and Test Sieves
ASTM E178	Standard Practice for Dealing with Outlying Observations
ASTM E1274	Standard Test Method for Measuring Pavement Roughness Using a Profilograph
ASTM E950	Standard Test Method for Measuring the Longitudinal Profile of Traveled Surfaces with an Accelerometer Established Inertial Profiling Reference
ASTM E2133	Standard Test Method for Using a Rolling Inclinometer to Measure Longitudinal and Transverse Profiles of a Traveled Surface

American Association of State Highway and Transportation Officials (AASHTO)

AASHTO M156	Standard Specification for Requirements for Mixing Plants for Hot-Mixed, Hot-Laid Bituminous Paving Mixtures.
AASHTO T329	Standard Method of Test for Moisture Content of Hot Mix Asphalt (HMA) by Oven Method
AASHTO T324	Standard Method of Test for Hamburg Wheel-Track Testing of Compacted Asphalt Mixtures
AASHTO T 340	Standard Method of Test for Determining the Rutting Susceptibility of Hot Mix Asphalt (APA) Using the Asphalt Pavement Analyzer (APA)

Asphalt Institute (AI)

Asphalt Institute Handbook MS-26, Asphalt Binder

Asphalt Institute MS-2 Mix Design Manual, 7th Edition

AI State Binder Specification Database

Federal Highway Administration (FHWA)

Long Term Pavement Performance Binder Program

Advisory Circulars (AC)

AC 150/5320-6	Airport Pavement Design and Evaluation

FAA Orders

5300.1	Modifications to Agency Airport Design, Construction, and Equipment Standards

Software

FAARFIELD

END OF ITEM P-401

Item P-608-R Rapid Cure Seal Coat

DESCRIPTION

608-R-1.1 This item shall consist of the application of an asphalt surface treatment composed of natural and refined asphalt materials, additives, and light oils, for taxiways and runways with the application of a suitable aggregate to maintain adequate surface friction; and airfield secondary and tertiary pavements including aprons, shoulders, overruns, roads, parking areas, and other general applications with or without aggregate applied as designated on the plans.

Seal coat, asphalt sealer, and asphalt material are interchangeable throughout this specification. Asphalt means natural and refined asphalt materials in this specification.

MATERIALS

608-R-2.1 Aggregate. The fine-aggregate material shall be a dry, clean, sound, durable, angular shaped, with highly textured surfaces, manufactured specialty abrasive aggregate. It shall have 100% fractured faces, SiO2 content of 55% minimum, CaO of **3**% max, with a sand equivalent greater than 85 and a Mohs hardness of 7 or greater. Additional characteristics as outlined in the following table(s). Contractor shall submit specialty aggregate manufacturer's technical data and the specialty aggregate manufacturer's certification indicating that the specialty aggregate meets the requirements of the specification to RPR prior to start of construction. The aggregate must be approved for use by RPR and shall meet the following gradation limits when tested in accordance with ASTM C136:

Aggregate Material Gradation Requirements

Sieve Designation	Percentage by Weight Passing Sieves
No. 8	100
No. 14	98-100
No. 16	85-100
No. 30	15-45
No. 50	0-8
No. 70	0-2

Aggregate Characteristics

Test	Standard	Range
Micro-Deval	ASTM D7428	15% max
Magnesium Sulfate Soundness	ASTM C88	2% max
Aggregate Angularity	ASTM C1252 – Test Method A	45% min
Moisture Content (%)	ASTM C566	2% max
Bulk Dry Specific Gravity	ASTM C128	2.6 – 3.0
Absorption (%)	ASTM D2216	3% max
Mohs Hardness	Mohs Scale	7 min

Contractor shall provide a certification of analysis (COA) showing analysis and properties of the material delivered for use on the project. Contractor's certification may be subject to verification by testing the material delivered for use on the project.

608-R-2.2 Asphalt material. The asphalt material base residue shall contain not less than 40% gilsonite, or uintaite, and shall not contain any tall oil pitch or coal tar material. The material shall be compatible with asphalt pavement, and have a 5-year minimum proven aviation performance record at airports with similar climatic conditions. The solvent-based rapid cure material shall meet the following properties:

Properties for Asphalt Sealing Material

Properties	Specification	Limits
Kinematic Viscosity at 140°F	ASTM D4402	10-30 cSt
Percent Residue by Distillation	ASTM D402	30-45%

Tests on Residue from Distillation

Properties	Specification	Limits
Penetration at 77°F	ASTM D5	2-12 dmm
Softening Point	ASTM D36	180-200
Solubility in 1,1,1 Trichloroethylene	ASTM D2042	99% min.
HCI Precipitation Value		18-25

Contractor shall provide a copy of the manufacturer's Certificate of Analysis (COA) for the asphalt sealer delivered to the project. If the asphalt sealer is diluted at other than the manufacturer's facility, Contractor shall provide a supplemental COA from an independent laboratory verifying the asphalt sealer properties. The COA shall be provided to and approved by RPR before the asphalt material is applied. The furnishing of the vendor's certified test report for the asphalt material shall not be interpreted as a basis for final acceptance. The manufacturer's COA may be subject to verification by testing the material delivered for use on the project.

The asphalt sealing material must be applied in an undiluted form. The material may be stored at ambient temperature for long periods of time if necessary. Storage will follow industry standard recommendations due to the flammability of the material; avoid sparks and open flames to come into contact with the material or any gasses that might be escaping the storage vessel.

Contractor shall provide a list of airport pavement projects, exposed to similar climate conditions, where this product has been successfully applied within at least 5 years of the project.

608-R-2.3 Seal Coat with Aggregate. Contractor shall submit friction test data from at least two airport projects identified under 608-R-2.2. Test data must be from the same project and include technical details on application rates, aggregate rates, and point of contact at the airport to confirm use and success of sealer with aggregate.

Friction test data in accordance with AC 150/5320-12, at 40 or 60 mph wet, must include as a minimum; the friction value prior to sealant application; two values, between 24 and 96 hours after application, with a minimum of 24 hours between tests; and one value between 180 days and 360 days after the application. The results of the tests between 24 and 96 hours shall indicate friction is increasing at a rate to obtain similar friction value of the pavement surface prior to application, and the long-term test shall indicate no apparent adverse effect with time relative to friction values and existing pavement surface.

Seal coat material submittal without required friction performance will not be approved. Friction tests performed on this project cannot be used as a substitute of this requirement.

COMPOSITION AND APPLICATION RATE

608-R-3.1 Application Rate. The approximate amounts of materials per square yard (square meter) for the asphalt surface treatment shall be as provided in the table for the treatment area(s) at the specified rate(s) as noted on the plans. The actual application rates will vary within the range specified to suit field conditions and will be recommended by the manufacturer's representative for control strip evaluations and approved by Engineer from the test area/sections evaluation.

	Application Rate	
Dilution Rate	**Quantity of Sealer gal/yd^2**	**Quantity of Aggregate lb/yd^2**
N/A	0.08-0.15	0.40-0.50

608-R-3.2 Control areas and control strips. A qualified manufacturer's representative shall be present in the field to assist Contractor in applying control areas and/or control strips to determine the appropriate application rate of both sealer and aggregate to be evaluated and approved by Engineer.

A test area and/or section shall be applied for each differing asphalt pavement surface identified in the project. The control area(s) and/or control strip(s) shall be used to determine the material application rate(s) of both sealer and aggregate prior to full production. The same equipment and method of operation shall be utilized on the control area(s) and/or control strip(s) as will be utilized on the remainder of the work.

a. For taxiway, taxilane and apron surfaces. Prior to full application, Contractor shall place test areas at varying application rates as recommended by Contractor's manufacturer's representative to determine appropriate application rate(s). Test areas will be located on representative section(s) of the pavement to receive the asphalt surface treatment designated by RPR.

b. For runway and high-speed exit taxiway surfaces. Prior to full application, Contractor shall place a series of control strips a minimum of 300 feet long by 12 feet wide, or width of anticipated application, whichever is greater, at varying application rates as recommended by the manufacturer's representative and acceptable to RPR to determine appropriate application rate(s). The control strips should be separated by a minimum of 200 feet between control strips. The area to be tested will be located on a representative section of the pavement to receive the asphalt surface treatment designated by Engineer. The control strips should be placed under similar field conditions as anticipated for the actual application. Before beginning the control strip(s), the skid resistance of the existing pavement shall be determined for each control strip with a continuous friction measuring equipment (CFME). The skid resistance of existing pavement can be immediately adjacent to the control strip or at the same location as the control strip if testing prior to application.

Contractor may begin testing the skid resistance of runway and high-speed exit taxiway control strips after application of the asphalt surface treatment has fully cured, generally 2 to 4 hours after application of the control strips depending on site conditions. Aircraft shall not be permitted on the runway or high-speed exit taxiway control strips until such time as Contractor validates that its surface friction meets the maintenance planning friction levels in AC 150/5320-12, Table 3-2 when tested at speeds of 40 and 60 mph wet with approved CFME.

c. Control strip. If the control strip should prove to be unsatisfactory, necessary adjustments to the application rate, placement operations, and equipment shall be made. Additional control strips shall be placed and additional skid resistance tests performed and evaluated. Full production shall not begin without RPR's approval of an appropriate application rate(s). Acceptable control strips shall be paid for in accordance with paragraph 608-R-8.1.

CONSTRUCTION METHODS

608-R-4.1 Worker safety. Contractor shall obtain a Safety Data Sheet (SDS) for both the asphalt sealer product and aggregate and require workmen to follow the manufacturer's recommended safety precautions. All additional industry standard safety precautions regarding the storage and applications of solvent based asphalts should be understood and followed by Contractor.

608-R-4.2 Weather limitations. The asphalt sealer shall be applied only when the existing pavement surface is dry and when the weather is not foggy, rainy, or when the wind velocity will prevent the uniform application of the material. No material shall be applied when dust or aggregate is blowing or when rain is anticipated within four hours of application completion. The atmospheric temperature and the pavement surface temperature shall both be at, or above 55°F and rising. The sealer will shall not be applied when pavement temperatures are expected to exceed 160F within the subsequent 72 hours if traffic will be opened on pavement within those 72 hours. During application, account for wind drift. Cover existing buildings, structures, runway edge lights, taxiway edge lights, informational signs, retro-reflective marking and in-pavement duct markers as necessary to protect against overspray before applying the sealer. Should sealer get on any light or marker fixture, promptly clean the fixture. If cleaning is not satisfactory to RPR, Contractor shall replace any light, sign or marker with equivalent equipment at no cost to Owner.

608-R-4.3 Equipment and tools. Contractor shall furnish all equipment, tools, and machinery necessary for the performance of the work.

a. Pressure distributor. The sealer shall be applied with a manufacturer-approved computer rate-controlled asphalt distributor. The equipment shall be in good working order and contain no contaminants or diluents in the tank. Spray bar tips must be clean, free of burrs, and of a size to maintain an even distribution of the sealer. Any type of tip or pressure source is suitable that will maintain predetermined flow rates and constant pressure during the application process with application speeds under eight miles per hour or 700 feet per minute. Contractor will provide verification of truck set-up (via a test-shot area), including but not limited to, nozzle tip size appropriate for application per nozzle manufacturer, spray-bar height and pressure and pump speed appropriate for the viscosity and temperature of sealer material, evidence of triple-overlap spray pattern, lack of leaks, and any other factors relevant to ensure the truck is in good working order before use. The distributor truck shall be equipped with a 12-foot, minimum, spray bar with individual nozzle control. The distributor truck shall be capable of specific application rates in the range of 0.05 to 0.25 gallons per square yard. These rates shall be computer-controlled rather than mechanical. The distributor truck shall have an easily accessible thermometer that constantly monitors the temperature of the sealer, and have an operable mechanical tank gauge that can be used to cross-check the computer accuracy.

Distributor truck shall effectively mix material prior to application. Distributor shall be equipped with a hand sprayer to spray the sealer in areas not accessible to distributor truck.

b. Aggregate spreader. The asphalt distributor truck will be equipped with an aggregate spreader mounted to the distributor truck that can apply aggregate to the sealer in a single pass operation without driving through wet sealer. The aggregate spreader shall be equipped with a variable control system capable of uniformly distributing the aggregate at the specified rate at varying application widths and speeds. The aggregate spreader must be adjusted to produce an even and accurate application of specified aggregate. Prior to any seal coat application, the aggregate spreader will be calibrated onsite to ensure acceptable uniformity of spread. RPR will observe the calibration and verify the results. The aggregate spreader will be re-calibrated each time the aggregate rate is changed either during the application of test strips or production. Contractor may consult the seal coat manufacturer representative for procedure and guidance. The aggregate spreader shall have a minimum hopper capacity of 3,000 pounds of aggregate. Push-type hand spreaders will be allowed for use around lights, signs and other obstructions, if necessary.

c. Power broom/blower. A power broom and/or blower shall be provided for removing loose material from the surface to be treated.

d. Equipment calibration. Asphalt distributors must be calibrated within the same construction season in accordance with ASTM D2995. Contractor must furnish a current calibration certification for the asphalt distributor truck from any State or other agency as approved by Engineer.

608-R-4.4 Preparation of asphalt pavement surfaces. Clean pavement surface immediately prior to placing the seal coat so that it is free of dust, dirt, grease, vegetation, oil or any type of objectionable surface film. Remove oil or grease from the asphalt pavement by scrubbing with a detergent, washing thoroughly with clean water, and treating these areas with the oil spot primer. Any additional surface preparation, such as crack repair, shall be in accordance with Item P-101, paragraph 101-3.6.

608-R-4.5 Application of asphalt sealer. The asphalt sealer shall be applied using a pressure distributor upon the properly prepared, clean, and dry surface at the application rate recommended by the manufacturer's representative and approved by Engineer from the test area/sections evaluation for each designated treatment area. Recommended material temperature for application is 70-90°F, but depending on the application equipment used, good material dispersion and pavement coverage may be achieved at lower material temperatures. The material should not be heated above 100°F.

Pavement surfaces which have excessive runoff of seal coat due to excessive amount of material being applied or excessive surface grade shall be treated in two or more applications, if feasible, to the specified application rate at no additional cost to Owner. Each additional application shall be performed after the prior application of material has penetrated into the pavement.

If low spots and depressions greater than 1/2 inch in depth in the pavement surface cause ponding or puddling of the applied materials, the pavement surface shall be lightly broomed with a broom or brush type squeegee. Brooming shall continue until the pavement surface is free of any pools of excess material. Ponding and/or puddling shall not cause excessive pavement tackiness and/or additional distress.

During all applications, the surfaces of adjacent structures shall be protected to prevent their being spattered or marred. Asphalt materials shall not be discharged into borrow pits or gutters or on the airport area.

Caution. *Heating asphalt binders of any kind always constitutes some degree of hazard. The most hazardous of these are cutback asphalts because of the highly volatile solvents used. Care must be taken not to allow any spark or open flame to come in contact with the cutback asphalt or the gases from cutback asphalt due to the low flash point. It is Contractor's responsibility to understand and adhere to these standards in regards to staying within the recommended application temperatures of this material and at all times during production.*

608-R-4.6 Application of aggregate material. Immediately following the application of the asphalt sealer, aggregate at the rate recommended by the manufacturer's representative and approved by RPR from the test area/sections evaluation for each designated application area, shall be spread uniformly over the asphalt sealer in a single-pass operation simultaneous with the sealer application. The sealer material and aggregate shall be applied simultaneously in a single pass operation, so as to not drive through the applied fresh sealer. The aggregate shall be spread to the same width of application as the asphalt material and shall not be applied in such thickness as to cause blanketing.

Sprinkling of additional aggregate material, and spraying additional asphalt material over areas that show up having insufficient cover or bitumen, shall be done by hand whenever necessary. In areas where hand work is necessitated, the aggregate shall be applied before the sealant begins to break.

Minimize aggregate from being broadcast and accumulating on the untreated pavement adjacent to an application pass. Prior to the next application pass, Contractor shall clean areas of excess or loose aggregate and remove from project site.

QUALITY CONTROL (QC)

608-R-5.1 Manufacturer's representation. The manufacturer's representative knowledgeable of the material, procedures, and equipment described in the specification is responsible to assist Contractor and RPR in determining the appropriate application rates of the emulsion and aggregate, as well as recommendations for proper preparation and start-up of seal coat application. Documentation of the manufacturer representative's experience and knowledge for applying the seal coat product shall be furnished to Engineer a minimum of 10 workdays prior to placement of the control strips. The cost of the manufacturer's representative shall be included in Contractor's bid price.

608-R-5.2 Contractor qualifications. Contractor shall provide Engineer with the seal coat Contractor's qualifications for applicators, personnel and equipment. Contractor shall also provide documentation that the seal coat Contractor is qualified to apply the seal coat and has made at least three applications similar to this project in the past two years.

MATERIAL ACCEPTANCE

608-R-6.1 Application rate. The rate of application of the asphalt emulsion shall be verified at least twice per day.

608-R-6.2 Friction tests. Friction tests in accordance with AC 150/5320-12, Measurement, Construction, and Maintenance of Skid-Resistant Airport Pavement Surfaces, shall be accomplished on all runway and high-speed taxiways that have received a seal coat. Each test includes performing friction tests at 40 mph and 60 mph both wet, 15 feet to each side of runway centerline. Contractor shall coordinate testing with RPR.and provide RPR a written report of friction test results. RPR shall be present for testing.

METHOD OF MEASUREMENT

608-R-7.1 Asphalt surface treatment. The quantity of asphalt surface treatment shall be measured by the square yards of material applied in accordance with the plans and specifications and accepted by Engineer.

Contractor must furnish Engineer with the certified weigh bills when materials are received for the asphalt material used under this contract. Contractor must not remove material from the tank car or storage tank until initial amounts and temperature measurements have been verified.

BASIS OF PAYMENT

608-R-8.1 Payment shall be made at the contract unit price per square yard for the asphalt surface treatment applied and accepted by RPR, and the contract unit price per lump sum for runway friction testing. This price shall be full compensation for all surface preparation, furnishing all materials, delivery, and application of these materials, for all labor, equipment, tools, and incidentals necessary to complete the item, including the friction testing and all work required to meet AC 150/5320-12, and any costs associated with furnishing a qualified manufacturer's representative to assist with control strips.

Payment will be made under:

Item P-608-R-8.1 Asphalt Surface Treatment – per square yard

REFERENCES

The publications listed below form a part of this specification to the extent referenced. The publications are referred to within the text by the basic designation only.

ASTM International (ASTM)

ASTM C88	Standard Test Method for Soundness of Aggregates by Use of Sodium Sulfate or Magnesium Sulfate
ASTM C117	Standard Test Method for Materials Finer than 75-µm (No. 200) Sieve in Mineral Aggregates by Washing
ASTM C128	Standard Test Method for Relative Density (Specific Gravity) and Absorption of Fine Aggregate
ASTM C136	Standard Test Method for Sieve Analysis of Fine and Coarse Aggregates
ASTM C566	Standard Test Method for Total Evaporable Moisture Content of Aggregate by Drying
ASTM C1252	Standard Test Methods for Uncompacted Void Content of Fine Aggregate
ASTM D5	Standard Test Method for Penetration of Asphalt Materials
ASTM D36	Standard Test Method for Softening Point of Bitumen (Ring-and-Ball Apparatus)
ASTM D402	Standard Test Method for Distillation of Cutback Asphalt
ASTM D2042	Standard Test Method for Solubility of Asphalt Materials in Trichloroethylene
ASTM D2216	Standard Test Methods for Laboratory Determination of Water (Moisture) Content of Soil and Rock by Mass
ASTM D2995	Standard Practice for Estimating Application Rate of Bituminous Distributors
ASTM D4402	Standard Test Method for Viscosity Determination of Asphalt at Elevated Temperatures Using a Rotational Viscometer
ASTM D5340	Standard Test Method for Airport Pavement Condition Index Surveys
ASTM D6433	Standard Practice for Roads and Parking Lots Pavement Condition Index Surveys
ASTM D6997	Standard Test Method for Distillation of Emulsified Asphalt
ASTM D7428	Standard Test Method for Resistance of Fine Aggregate to Degradation by Abrasion in the Micro-Deval Apparatus

Advisory Circulars (AC)

AC 150/5320-12	Measurement, Construction, and Maintenance of Skid-Resistant Airport Pavement Surfaces
AC 150/5320-17	Airfield Pavement Surface Evaluation and Rating (PASER) Manuals
AC 150/5380-6	Guidelines and Procedures for Maintenance of Airport Pavements
AC 150/5380-7	Airport Pavement Management Program (PMP)

END OF ITEM P-608-R

Item P-602 Emulsified Asphalt Prime Coat

DESCRIPTION

602-1.1 This item shall consist of an application of emulsified asphalt material on the prepared base course in accordance with these specifications and in reasonably close conformity to the lines shown on the plans.

MATERIALS

602-2.1 Emulsified Asphalt material. The emulsified asphalt material shall be as specified in ASTM D3628 for use as a prime coat appropriate to local conditions. Contractor shall provide a copy of the manufacturer's Certificate of Analysis (COA) for the emulsified asphalt material. The COA shall be provided to and approved by Engineer before the emulsified asphalt material is applied. The furnishing of the COA for the emulsified asphalt material shall not be interpreted as a basis for final acceptance. The manufacturer's COA may be subject to verification by testing the material delivered for use on the project.

CONSTRUCTION METHODS

602-3.1 Weather limitations. The emulsified asphalt prime coat shall be applied only when the existing surface is dry; the atmospheric temperature is 50°F or above, and the temperature has not been below 35°F for the 12 hours prior to application; and when the weather is not foggy or rainy. The temperature requirements may be waived when directed by Engineer.

602-3.2 Equipment. The equipment shall include a self-powered pressure asphalt material distributor and equipment for heating asphalt material.

Provide a distributor with pneumatic tires of such size and number that the load produced on the base surface does not exceed 65.0 psi of tire width to prevent rutting, shoving or otherwise damaging the base, surface, or other layers in the pavement structure. Design and equip the distributor to spray the asphalt material in a uniform coverage at the specified temperature, at readily determined and controlled rates 0.05-1.0 gallon per square yard with a pressure range of 25-75 psi and with an allowable variation from the specified rate of not more than ±5%, and at variable widths. Include with the distributor equipment a separate power unit for the bitumen pump, full-circulation spray bars, tachometer, pressure gauges, volume-measuring devices, adequate heaters for heating of materials to the proper application temperature, a thermometer for reading the temperature of tank contents, and a hand hose attachment suitable for applying asphalt material manually to areas inaccessible to the distributor. Equip the distributor to circulate and agitate the asphalt material during the heating process. If the distributor is not equipped with an operable quick shutoff valve, the prime operations shall be started and stopped on building paper.

A power broom and power blower suitable for cleaning the surfaces to which the asphalt coat is to be applied shall be provided.

Asphalt distributors must be calibrated annually in accordance with ASTM D2995. Contractor must furnish a current calibration certification for the asphalt distributor truck from any State or other agency as approved by Engineer.

602-3.3 Application of emulsified asphalt material. Immediately before applying the prime coat, the full width of the surface to be primed shall be swept with a power broom to remove all loose dirt and other objectionable material.

The asphalt emulsion material shall be uniformly applied with an asphalt distributor at 0.15-0.30 gallons per square yard depending on the base course surface texture. The type of asphalt material and application rate shall be approved by Engineer prior to application.

Following application of the emulsified asphalt material and prior to application of the succeeding layer of pavement, allow the asphalt coat to cure and to obtain evaporation of any volatiles or moisture. Maintain the coated surface until the succeeding layer of pavement is placed, by protecting the surface against damage and by repairing and recoating deficient areas. Allow the prime coat to cure without being disturbed for a period of at least 48 hours or longer, as may be necessary to attain penetration into the treated course. Furnish and spread sand to effectively blot up and cure excess asphalt material. Contractor shall remove blotting sand prior to asphalt concrete lay down operations at no additional expense to Owner. Keep traffic off surfaces freshly treated with asphalt material. Provide sufficient warning signs and barricades so that traffic will not travel over freshly treated surfaces.

602-3.4 Trial application rates. Contractor shall apply a minimum of three lengths of at least 100 feet for the full width of the distributor bar to evaluate the amount of emulsified asphalt material that can be satisfactorily applied with the equipment. Apply three different application rates of emulsified asphalt materials within the application range specified in paragraph 602-3.3. Other trial applications can be made using various amounts of material as directed by Engineer. The trial application is to demonstrate the equipment can uniformly apply the emulsified asphalt material within the rates specified and determine the application rate for the project.

602-3.5 Freight and waybills. Contractor shall submit waybills and delivery tickets during the progress of the work. Before the final estimate is allowed, file with Engineer certified waybills and certified delivery tickets for all emulsified asphalt materials used in the construction of the pavement covered by the contract. Do not remove emulsified asphalt material from storage until the initial outage and temperature measurements have been taken. The delivery or storage units will not be released until the final outage has been taken.

METHOD OF MEASUREMENT

602-4.1 The emulsified asphalt material for prime coat shall be measured by the gallon. Volume shall be corrected to the volume at 60°F in accordance with ASTM D4311. The emulsified asphalt material paid for will be the measured quantities used in the accepted work, provided that the measured quantities are not 10% over the specified application rate. Any amount of emulsified asphalt material more than 10% over the specified application rate for each application will be deducted from the measured quantities, except for irregular areas where hand spraying of the emulsified asphalt material is necessary. Water added to emulsified asphalt will not be measured for payment.

BASIS OF PAYMENT

602-5.1 Payment shall be made at the contract unit price per gallon for emulsified asphalt prime coat. This price shall be full compensation for furnishing all materials and for all preparation, delivering, and applying the materials, and for all labor, equipment, tools, and incidentals necessary to complete this item.

Payment will be made under:

Item P-602-5.1 Emulsified Asphalt Prime Coat, complete, per gallon.

REFERENCES

The publications listed below form a part of this specification to the extent referenced. The publications are referred to within the text by the basic designation only.

ASTM International (ASTM)

ASTM D2995	Standard Practice for Estimating Application Rate and Residual Application Rate of Bituminous Distributors
ASTM D3628	Standard Practice for Selection and Use of Emulsified Asphalts

END OF ITEM P-602

Item P-603 Emulsified Asphalt Tack Coat

DESCRIPTION

603-1.1 This item shall consist of preparing and treating an asphalt or concrete surface with asphalt material in accordance with these specifications and in reasonably close conformity to the lines shown on the plans.

MATERIALS

603-2.1 Asphalt materials. The asphalt material shall be an emulsified asphalt as specified in ASTM D3628 as an asphalt application for tack coat appropriate to local conditions. The emulsified asphalt shall not be diluted. Contractor shall provide a copy of the manufacturer's Certificate of Analysis (COA) for the asphalt material to Engineer before the asphalt material is applied for review and acceptance. The furnishing of COA for the asphalt material shall not be interpreted as a basis for final acceptance. The manufacturer's COA may be subject to verification by testing the material delivered for use on the project.

CONSTRUCTION METHODS

603-3.1 Weather limitations. Tack coat shall be applied only when the existing surface is dry and atmospheric temperature is 50°F or above; temperature has not been below 35°F for 12 hours prior to application; and when the weather is not foggy or rainy. The temperature requirements may be waived when directed by Engineer.

603-3.2 Equipment. Contractor shall provide equipment for heating and applying the emulsified asphalt material. The emulsion shall be applied with a manufacturer-approved computer rate-controlled asphalt distributor. The equipment shall be in good working order and contain no contaminants or diluents in the tank. Spray bar tips must be clean, free of burrs, and of a size to maintain an even distribution of the emulsion. Any type of tip or pressure source is suitable that will maintain predetermined flow rates and constant pressure during the application process with application speeds under eight miles per hour or 700 feet per minute .

The equipment will be tested under pressure for leaks and to ensure proper set-up before use to verify truck set-up (via a test-shot area), including but not limited to, nozzle tip size appropriate for application, spray-bar height and pressure and pump speed, evidence of triple-overlap spray pattern, lack of leaks, and any other factors relevant to ensure the truck is in good working order before use.

The distributor truck shall be equipped with a minimum 12-foot spreader spray bar with individual nozzle control with computer-controlled application rates. The distributor truck shall have an easily accessible thermometer that constantly monitors the temperature of the emulsion and have an operable mechanical tank gauge that can be used to cross-check the computer accuracy. If the distributor is not equipped with an operable quick shutoff valve, the prime operations shall be started and stopped on building paper.

The distributor truck shall be equipped to effectively heat and mix the material to the required temperature prior to application as required. Heating and mixing shall be done in accordance with the manufacturer's recommendations. Do not overheat or over mix the material.

The distributor shall be equipped with a hand sprayer.

Asphalt distributors must be calibrated annually in accordance with ASTM D2995. Contractor must furnish a current calibration certification for the asphalt distributor truck from any State or other agency as approved by Engineer.

Power broom/blower suitable for cleaning the surfaces to which the asphalt tack coat is to be applied shall be provided.

603-3.3 Application of emulsified asphalt material. The emulsified asphalt shall not be diluted. Immediately before applying the emulsified asphalt tack coat, the full width of surface to be treated shall be swept with a power broom and/or power blower to remove all loose dirt and other objectionable material.

The emulsified asphalt material shall be uniformly applied with an asphalt distributor at rates appropriate for conditions and surface specified in the table. Type of asphalt material and application rate shall be approved by Engineer prior to application.

Emulsified Asphalt

Surface Type	Residual Rate, gal/SY	Emulsion Application Bar Rate, gal/SY
New asphalt	0.02-0.05	0.03-0.07
Existing asphalt	0.04-0.07	0.06-0.11
Milled Surface	0.04-0.08	.0.06-0.12
Concrete	0.03-0.05	0.05-0.08

After application of the tack coat, the surface shall be allowed to cure without being disturbed for time necessary to permit drying and setting of tack coat. This period shall be determined by Engineer. Contractor shall protect tack coat and maintain the surface until the next course has been placed. When tack coat has been disturbed by Contractor, tack coat shall be reapplied at Contractor expense.

603-3.4 Freight and waybills Contractor shall submit waybills and delivery tickets, during progress of the work. Before the final statement is allowed, file with Engineer certified waybills and certified delivery tickets for all emulsified asphalt materials used in the construction of the pavement covered by the contract. Do not remove emulsified asphalt material from storage until the initial outage and temperature measurements have been taken. The delivery or storage units will not be released until the final outage has been taken.

METHOD OF MEASUREMENT

603-4.1 The emulsified asphalt material for tack coat shall be measured by the gallon. Volume shall be corrected to the volume at 60°F in accordance with ASTM D1250. The emulsified asphalt material paid for will be the measured quantities used in the accepted work, provided that the measured quantities are not 10% over the specified application rate. Any amount of emulsified asphalt material more than 10% over the specified application rate for each application will be deducted from the measured quantities, except for irregular areas where hand spraying of the emulsified asphalt material is necessary. Water added to emulsified asphalt will not be measured for payment.

BASIS OF PAYMENT

603.5-1 Payment shall be made at the contract unit price per gallon of emulsified asphalt material. This price shall be full compensation for furnishing all materials, for all preparation, delivery, and application of these materials, and for all labor, equipment, tools, and incidentals necessary to complete the item.

Payment will be made under:

Item P-603-5.1	Emulsified Asphalt Tack Coat - per gallon

REFERENCES

The publications listed below form a part of this specification to the extent referenced. The publications are referred to within the text by the basic designation only.

ASTM International (ASTM)

ASTM D1250	Standard Guide for Use of the Petroleum Measurement Tables
ASTM D2995	Standard Practice for Estimating Application Rate and Residual Application Rate of Bituminous Distributors
ASTM D3628	Standard Practice for Selection and Use of Emulsified Asphalts

END ITEM P-603

Item P-610 Concrete for Miscellaneous Structures

DESCRIPTION

610-1.1 This item shall consist of concrete and reinforcement, as shown on the plans, prepared and constructed in accordance with these specifications. This specification shall be used for all concrete other than airfield pavement which are cast-in-place.

MATERIALS

610-2.1 General. Only approved materials, conforming to the requirements of these specifications, shall be used in the work. Materials may be subject to inspection and tests at any time during their preparation or use. The source of all materials shall be approved by Engineer before delivery or use in the work. Representative preliminary samples of the materials shall be submitted by Contractor, when required, for examination and test. Materials shall be stored and handled to ensure preservation of their quality and fitness for use and shall be located to facilitate prompt inspection. All equipment for handling and transporting materials and concrete must be clean before any material or concrete is placed in them.

The use of pit-run aggregates shall not be permitted unless the pit-run aggregate has been screened and washed, and all fine and coarse aggregates stored separately and kept clean. The mixing of different aggregates from different sources in one storage stockpile or alternating batches of different aggregates shall not be permitted.

a. Reactivity. Fine aggregate and coarse aggregates to be used in all concrete shall have been tested separately within six months of the project in accordance with ASTM C1260. Test results shall be submitted to Engineer. The aggregate shall be considered innocuous if the expansion of test specimens, tested in accordance with ASTM C1260, does not exceed 0.08% at 14 days (16 days from casting). If the expansion either or both test specimen is greater than 0.08% at 14 days, but less than 0.20%, a minimum of 25% of Type F fly ash, or between 40% and 55% of slag cement shall be used in the concrete mix.

If the expansion is greater than 0.20%, the aggregates shall not be used, and test results for other aggregates must be submitted for evaluation; or aggregates that meet P-501 reactivity test requirements may be utilized.

610-2.2 Coarse aggregate. The coarse aggregate for concrete shall meet the requirements of ASTM C33 and the requirements of Table 4, Class Designation 5S; and the grading requirements shown, as required for the project.

Coarse Aggregate Grading Requirements

Maximum Aggregate Size	ASTM C33, Table 3 Grading Requirements (Size No.)
1 1/2 inch	467 or 4 and 67
1 inch	57
¾ inch	67
½ inch	7

610-2.2.1 Coarse Aggregate susceptibility to durability (D) cracking. Coarse aggregate may only be accepted from sources that have a 20-year service history for the same gradation to be supplied with no history of D-Cracking. Aggregates that do not have a 20-year record of service free from major repairs (less than 5% of slabs replaced) in similar conditions without D-cracking shall not be used unless the material currently being produced has a durability factor greater than or equal to 95% per ASTM C666. Contractor shall submit a current certification and test results to verify aggregate acceptability. Test results will only be accepted from a State Department of Transportation (DOT) materials laboratory or accredited laboratory. Certification and test results which are not dated, over one year old, or for different gradations will not be accepted.

610-2.3 Fine aggregate. The fine aggregate for concrete shall meet all fine aggregate requirements of ASTM C33. Blending will be permitted, if necessary, to meet the gradation requirements for fine aggregate.

610-2.4 Cement. Cement shall conform to the requirements of ASTM C150 Type I or II.

610-2.5 Cementitious materials.

a. Fly ash. Not allowed.

b. Slag cement (ground granulated blast furnace (GGBF)). Not allowed.

610-2.6 Water. Water used in mixing or curing shall be from potable water sources. Other sources shall be tested in accordance with ASTM C1602 prior to use.

610-2.7 Admixtures. Contractor shall submit certificates indicating that the material to be furnished meets all of the requirements indicated below. In addition, Engineer may require Contractor to submit complete test data from an approved laboratory showing that the material to be furnished meets all of the requirements of the cited specifications. Subsequent tests may be made of samples taken by Engineer from the supply of the material being furnished or proposed for use on the work to determine whether the admixture is uniform in quality with that approved.

a. Air-entraining admixtures. Air-entraining admixtures shall meet the requirements of ASTM C260 and shall consistently entrain the air content in the specified ranges under field conditions. The air-entrainment agent and any water reducer admixture shall be compatible.

b. Water-reducing admixtures. Water-reducing admixture shall meet the requirements of ASTM C494, Type A, B, or D. ASTM C494, Type F and G high range water reducing admixtures and ASTM C1017 flowable admixtures shall not be used.

c. Other chemical admixtures. The use of set retarding, and set-accelerating admixtures shall be approved by Engineer. Retarding shall meet the requirements of ASTM C494, Type A, B, or D and set-accelerating shall meet the requirements of ASTM C494, Type C. Calcium chloride and admixtures containing calcium chloride shall not be used.

610-2.8 Premolded joint material. Premolded joint material for expansion joints shall meet the requirements of ASTM D1751.

610-2.9 Joint filler. The filler for joints shall meet the requirements of Item P-605, unless otherwise specified.

610-2.10 Steel reinforcement. Reinforcing shall consist of deformed bars conforming to the requirements of ASTM A615, Grade 60**.**

610-2.11 Materials for curing concrete. Curing materials shall conform to White-pigmented Liquid Membrane-Forming Compound, Type 2, Class B in accordance to ASTM C309.

CONSTRUCTION METHODS

610-3.1 General. The Contractor shall furnish all labor, materials, and services necessary for, and incidental to, the completion of all work as shown on the drawings and specified here. All machinery and equipment used by the Contractor on the work, shall be of sufficient size to meet the requirements of the work. All work shall be subject to the inspection and approval of the Engineer.

610-3.2 Concrete Mixture. The concrete shall develop a compressive strength of 3,500 psi in 28 days as determined by test cylinders made in accordance with ASTM C31 and tested in accordance with ASTM C39. The concrete shall contain not less than 470 pounds of cementitious material per cubic yard. The water cementitious ratio shall not exceed 0.45 by weight. The air content of the concrete shall be 5% ±1.2% as determined by ASTM C231 and have a slump not more than 4 inches as determined by ASTM C143.

610-3.3 Mixing. Concrete may be mixed at the construction site, at a central point, or wholly or in part in truck mixers. The concrete shall be mixed and delivered in accordance with the requirements of ASTM C94 or C685.

The concrete shall be mixed only in quantities required for immediate use. Concrete shall not be mixed while the air temperature is below 40°F without Engineer approval. If approval is granted for mixing under such conditions, aggregates or water, or both, shall be heated and the concrete shall be placed at a temperature not less than 50°F nor more than 100°F. Contractor shall be held responsible for any defective work, resulting from freezing or injury in any manner during placing and curing, and shall replace such work at his expense.

Retempering of concrete by adding water or any other material is not permitted.

Rate of delivery of concrete to the job shall be sufficient to allow uninterrupted placement of the concrete.

610-3.4 Forms. Concrete shall not be placed until all the forms and reinforcements have been inspected and approved by Engineer. Forms shall be of suitable material and shall be of the type, size, shape, quality, and strength to build the structure as shown on the plans. The forms shall be true to line and grade and shall be mortar-tight and sufficiently rigid to prevent displacement and sagging between supports. The surfaces of forms shall be smooth and free from irregularities, dents, sags, and holes. Contractor shall be responsible for their adequacy.

The internal form ties shall be arranged so no metal will show in the concrete surface or discolor the surface when exposed to weathering when the forms are removed. All forms shall be wetted with water or with a non-staining mineral oil, which shall be applied immediately before the concrete is placed. Forms shall be constructed so they can be removed without injuring the concrete or concrete surface.

610-3.5 Placing reinforcement. All reinforcement shall be accurately placed, as shown on the plans, and shall be firmly held in position during concrete placement. Bars shall be fastened together at intersections. The reinforcement shall be supported by approved metal chairs. Shop drawings, lists, and bending details shall be supplied by the Contractor when required.

610-3.6 Embedded items. Before placing concrete, all embedded items shall be firmly and securely fastened in place as indicated. All embedded items shall be clean and free from coating, rust, scale, oil, or any foreign matter. The concrete shall be spaded and consolidated around and against embedded items. The embedding of wood shall not be allowed.

610-3.7 Concrete Consistency. Contractor shall monitor the consistency of the concrete delivered to the project site; collect each batch ticket; check temperature; and perform slump tests on each truck at the project site in accordance with ASTM C143.

610-3.8 Placing concrete. All concrete shall be placed during daylight hours, unless otherwise approved. The concrete shall not be placed until the depth and condition of foundations, the adequacy of forms and

falsework, and the placing of the steel reinforcing have been approved by Engineer. Concrete shall be placed as soon as practical after mixing, but in no case later than one hour after water has been added to the mix. The method and manner of placing shall avoid segregation and displacement of the reinforcement. Troughs, pipes, and chutes shall be used as an aid in placing concrete when necessary. The concrete shall not be dropped from a height of more than 5 feet. Concrete shall be deposited as nearly as practical in its final position to avoid segregation due to rehandling or flowing. Do not subject concrete to procedures which cause segregation. Concrete shall be placed on clean, damp surfaces, free from running water, or on a properly consolidated soil foundation.

610-3.9 Vibration. Vibration shall follow the guidelines in American Concrete Institute (ACI) Committee 309R, Guide for Consolidation of Concrete.

610-3.10 Joints. Joints shall be constructed as indicated on the plans.

610-3.11 Finishing. All exposed concrete surfaces shall be true, smooth, and free from open or rough areas, depressions, or projections. All concrete horizontal plane surfaces shall be brought flush to the proper elevation with the finished top surface struck-off with a straightedge and floated.

610-3.12 Curing and protection. All concrete shall be properly cured in accordance with the recommendations in American Concrete Institute (ACI) 308R, Guide to External Curing of Concrete. The concrete shall be protected from damage until project acceptance.

610-3.13 Cold-weather placing. When concrete is placed at temperatures below 40°F, follow the cold weather concreting recommendations found in ACI 306R, Cold Weather Concreting.

610-3.14 Hot-weather placing. When concrete is placed in hot weather greater than 85ºF, follow the hot weather concreting recommendations found in ACI 305R, Hot Weather Concreting.

QUALITY ASSURANCE (QA)

610-4.1 Quality Assurance sampling and testing. Concrete for each day's placement will be accepted on the basis of the compressive strength specified in paragraph 610-3.2. Engineer will sample the concrete in accordance with ASTM C172; test the slump in accordance with ASTM C143; test air content in accordance with ASTM C231; make and cure compressive strength specimens in accordance with ASTM C31; and test in accordance with ASTM C39. QA testing agency will meet the requirements of ASTM C1077.

Contractor shall provide adequate facilities for the initial curing of cylinders.

610-4.2 Defective work. Any defective work that cannot be satisfactorily repaired as determined by ENGINEER, shall be removed and replaced at the Contractor's expense. Defective work includes, but is not limited to, uneven dimensions, honeycombing and other voids on the surface or edges of the concrete.

METHOD OF MEASUREMENT

610-5.1 Concrete shall be measured by number of square yards for drainage valley gutters construction for payment in place, accepted based on dimensions shown on plans. Concrete considered incidental for all other work items, and no separate measurement shall be made of concrete complete in place and accepted.

BASIS OF PAYMENT

610-6.1 Payment shall be made at the contract price by the number of square yard for drainage valley gutters construction. Concrete considered incidental for all other work items, and no separate payment shall be made. This price shall be full compensation for furnishing all materials including reinforcement and

embedded items and for all preparation, delivery, installation, and curing of these materials, and for all labor, equipment, tools, and incidentals necessary to complete the item.

Payment will be made under:

Item P-610-6.1 Concrete, per square yards (drainage valley gutters construction only) is incidental for all other work items.

REFERENCES

The publications listed below form a part of this specification to the extent referenced. The publications are referred to within the text by the basic designation only.

ASTM A184	Standard Specification for Welded Deformed Steel Bar Mats for Concrete Reinforcement
ASTM A615	Standard Specification for Deformed and Plain Carbon-Steel Bars for Concrete Reinforcement
ASTM A704	Standard Specification for Welded Steel Plain Bar or Rod Mats for Concrete Reinforcement
ASTM A706	Standard Specification for Low-Alloy Steel Deformed and Plain Bars for Concrete Reinforcement
ASTM A775	Standard Specification for Epoxy-Coated Steel Reinforcing Bars
ASTM A884	Standard Specification for Epoxy-Coated Steel Wire and Welded Wire Reinforcement
ASTM A934	Standard Specification for Epoxy-Coated Prefabricated Steel Reinforcing Bars
ASTM A1064	Standard Specification for Carbon-Steel Wire and Welded Wire Reinforcement, Plain and Deformed, for Concrete
ASTM C31	Standard Practice for Making and Curing Concrete Test Specimens in the Field
ASTM C33	Standard Specification for Concrete Aggregates
ASTM C39	Standard Test Method for Compressive Strength of Cylindrical Concrete Specimens
ASTM C94	Standard Specification for Ready-Mixed Concrete
ASTM C136	Standard Test Method for Sieve or Screen Analysis of Fine and Coarse Aggregates
ASTM C114	Standard Test Methods for Chemical Analysis of Hydraulic Cement
ASTM C136	Standard Test Method for Sieve Analysis of Fine and Coarse Aggregates
ASTM C143	Standard Test Method for Slump of Hydraulic-Cement Concrete
ASTM C150	Standard Specification for Portland Cement
ASTM C171	Standard Specification for Sheet Materials for Curing Concrete
ASTM C172	Standard Practice for Sampling Freshly Mixed Concrete

ASTM C231	Standard Test Method for Air Content of Freshly Mixed Concrete by the Pressure Method
ASTM C260	Standard Specification for Air-Entraining Admixtures for Concrete
ASTM C309	Standard Specification for Liquid Membrane-Forming Compounds for Curing Concrete
ASTM C311	Standard Test Methods for Sampling and Testing Fly Ash or Natural Pozzolans for Use in Portland-Cement Concrete
ASTM C494	Standard Specification for Chemical Admixtures for Concrete
ASTM C618	Standard Specification for Coal Fly Ash and Raw or Calcined Natural Pozzolan for Use in Concrete
ASTM C666	Standard Test Method for Resistance of Concrete to Rapid Freezing and Thawing
ASTM C685	Standard Specification for Concrete Made by Volumetric Batching and Continuous Mixing
ASTM C989	Standard Specification for Slag Cement for Use in Concrete and Mortars
ASTM C1017	Standard Specification for Chemical Admixtures for Use in Producing Flowing Concrete
ASTM C1077	Standard Practice for Agencies Testing Concrete and Concrete Aggregates for Use in Construction and Criteria for Testing Agency Evaluation
ASTM C1157	Standard Performance Specification for Hydraulic Cement
ASTM C1260	Standard Test Method for Potential Alkali Reactivity of Aggregates (Mortar-Bar Method)
ASTM C1365	Standard Test Method for Determination of the Proportion of Phases in Portland Cement and Portland-Cement Clinker Using X-Ray Powder Diffraction Analysis
ASTM C1602	Standard Specification for Mixing Water Used in the Production of Hydraulic Cement Concrete
ASTM D1751	Standard Specification for Preformed Expansion Joint Filler for Concrete Paving and Structural Construction (Nonextruding and Resilient Asphalt Types)
ASTM D1752	Standard Specification for Preformed Sponge Rubber Cork and Recycled PVC Expansion Joint Fillers for Concrete Paving and Structural Construction
ACI 305R	Hot Weather Concreting
ACI 306R	Cold Weather Concreting
ACI 308R	Guide to External Curing of Concrete
ACI 309R	Guide for Consolidation of Concrete

END OF ITEM P-610

Item P-620 Runway and Taxiway Marking

DESCRIPTION

620-1.1 This item shall consist of the preparation and painting of numbers, markings, and stripes on the surface of runways, taxiways, and aprons, in accordance with these specifications and at the locations shown on the plans, or as directed by Engineer. “Paint,” “marking material,” “painting,” and “application of markings” are interchangeable throughout this specification.

MATERIALS

620-2.1 Materials acceptance. Contractor shall furnish manufacturer’s certified test reports, for materials shipped to the project. Certified test reports shall include a statement that the materials meet the specification requirements. This certification along with a copy of the paint manufacturer’s surface preparation; marking materials, including adhesion, flow promoting/floatation additive; and application requirements must be submitted and approved by Engineer prior to the initial application of markings. Reports can be used for material acceptance or Engineer may perform verification testing. Reports shall not be interpreted as a basis for payment. Contractor shall notify RPR and Engineer upon arrival of a shipment of materials to the site. All material shall arrive in sealed containers that are easily quantifiable for inspection by Engineer.

620-2.2 Marking materials.

Table 1. Marking Materials

Paint[1]				Glass Beads[2]	
Type	**Color**	**Fed Std. 595 Number**	**Application Rate Maximum**	**Type**	**Application Rate Minimum**
Waterborne Types I	White	37,925	115 ft2/gal	I / Grade A	7lbs / gal
	Yellow	33,538 or 33,655	115 ft2/gal	I / Grade A	
	Black	37,038	115 sq ft./gal	N/A	N/A

[1] See paragraph 620-2.2a
[2] See paragraph 620-2.2b

a. Paint. Paint shall be waterborne in accordance with requirements of this paragraph. Paint colors shall comply with Federal Standard No. 595.

Waterborne. Paint shall meet requirements of Federal Specification TT-P-1952F, Type I. The non-volatile portion of the vehicle for all paint types shall be composed of a 100% acrylic polymer as determined by infrared spectral analysis.

Epoxy. Not used.

Solvent-Base. Not used.

b. Reflective media. Glass beads for white and yellow paint shall meet the requirements for Federal Specification TT-B-1325D Type I, Gradation A.

Glass beads shall be treated with all compatible coupling agents recommended by the manufacturers of the paint and reflective media to ensure adhesion and embedment.

Glass beads shall not be used in black and green paint.

Type III glass beads shall not be used in red and pink paint.

CONSTRUCTION METHODS

620-3.1 Weather limitations. Painting shall only be performed when the surface is dry, and the ambient temperature and the pavement surface temperature meet the manufacturer's recommendations in accordance with paragraph 620-2.1. Painting operations shall be discontinued when the ambient or surface temperatures does not meet the manufacturer's recommendations. Markings shall not be applied when the wind speed exceeds 10 mph unless windscreens are used to shroud the material guns. Markings shall not be applied when weather conditions are forecasts to not be within the manufacturers' recommendations for application and dry time.

620-3.2 Equipment. Equipment shall include the apparatus necessary to properly clean the existing surface, a mechanical marking machine, a bead dispensing machine, and such auxiliary hand-painting equipment as may be necessary to satisfactorily complete the job.

The mechanical marker shall be an atomizing spray-type or airless type marking machine with automatic glass bead dispensers suitable for application of traffic paint. It shall produce an even and uniform film thickness and appearance of both paint and glass beads at the required coverage and shall apply markings of uniform cross-sections and clear-cut edges without running or spattering and without over spray. The marking equipment for both paint and beads shall be calibrated daily.

620-3.3 Preparation of surfaces. Immediately before application of the paint, the surface shall be dry and free from dirt, grease, oil, laitance, or other contaminates that would reduce the bond between the paint and the pavement. Use of any chemicals or impact abrasives during surface preparation shall be approved in advance by Engineer. After the cleaning operations, sweeping, blowing, or rinsing with pressurized water shall be performed to ensure the surface is clean and free of grit or other debris left from the cleaning process.

a. Preparation of new pavement surfaces. The area to be painted shall be cleaned by broom, blower, water blasting, or by other methods approved by Engineer to remove all contaminants, including PCC curing compounds, minimizing damage to the pavement surface.

b. Preparation of pavement to remove existing markings. Existing pavement markings shall be removed by rotary grinding, water blasting, or by other methods approved by Engineer minimizing damage to pavement surface. Removal area may need to be larger than area of markings to eliminate ghost markings. After removal of markings on asphalt pavements, apply a fog seal or seal coat to 'block out' the removal area to eliminate 'ghost' markings.

c. Preparation of pavement markings prior to remarking. Prior to remarking existing markings, loose existing markings must be removed minimizing damage to the pavement surface, with a method approved by Engineer. After removal, the surface shall be cleaned of all residue or debris.

Prior to the marking application, Contractor shall certify in writing surface is dry and free from dirt, grease, oil, laitance, or other foreign material that would prevent bond of paint to the pavement or existing markings. This certification along with a copy of the paint manufactures application and surface preparation requirements must be submitted to RPR and Engineer prior to the initial application of markings.

620-3.4 Layout of markings. The proposed markings shall be laid out in advance of the paint application. The locations of markings to receive glass beads shall be shown on the plans.

620-3.5 Application. A period of 30 days shall elapse between placement of surface course or seal coat and application of the permanent paint markings. Paint shall be applied in two opposite directions at the rate of 30/70 at the locations and to the dimensions and spacing shown on the plans. Paint shall not be applied until the layout and condition of the surface has been approved by Engineer.

The edges of the markings shall not vary from a straight line more than 1/2 inch in 50 feet, and marking dimensions and spacing shall be within the following tolerances:

Marking Dimensions and Spacing Tolerance

Dimension and Spacing	Tolerance
36 inches or less	±1/2 inch
greater than 36 inches to 6 feet	±1 inch
greater than 6 feet to 60 feet	±2 inch
greater than 60 feet	±3 inch

The paint shall be mixed in accordance with the manufacturer's instructions and applied to the pavement with a marking machine at the rate shown in Table 1. The addition of thinner will not be permitted.

Glass beads shall be distributed upon the marked areas at the locations shown on the plans to receive glass beads immediately after the second and final application of the paint. A dispenser shall be furnished that is properly designed for attachment to the marking machine and suitable for dispensing glass beads. Glass beads shall be applied at the rate shown in Table 1. Glass beads shall not be applied to black paint or green paint. Glass beads shall adhere to the cured paint or all marking operations shall cease until corrections are made. Different bead types shall not be mixed. Regular monitoring of glass bead embedment and distribution should be performed.

620-3.6 Application--preformed thermoplastic airport pavement markings. Preformed thermoplastic pavement markings not used.

620-3.7 Control strip. Prior to the full application of airfield markings, Contractor shall prepare a control strip in the presence of Engineer. Contractor shall demonstrate the surface preparation method and all striping equipment to be used on the project. The marking equipment must achieve the prescribed application rate of paint and population of glass beads (per Table 1) that are properly embedded and evenly distributed across the full width of the marking. Prior to acceptance of the control strip, markings must be evaluated during darkness to ensure a uniform appearance.

620-3.8 Retro-reflectance. Reflectance shall be measured with a portable retro-reflectometer meeting ASTM E1710 (or equivalent). A total of six reading shall be taken over a 6-square-foot area with three readings taken from each direction. The average shall be equal to or above the minimum levels of all readings which are within 30% of each other.

Minimum Retro-Reflectance Values

Material	Retro-reflectance mcd/m²/lux		
	White	Yellow	Red
Initial Type I	300	175	35
Initial Type III	600	300	35
Initial Thermoplastic	225	100	35
All materials, remark when less than[1]	100	75	10

[1] 'Prior to remarking determine if removal of contaminants on markings will restore retro-reflectance

620-3.9 Protection and cleanup. After application of the markings, all markings shall be protected from damage until dry. All surfaces shall be protected from excess moisture/rain and from disfiguration by spatter, splashes, spillage, or drippings. Contractor shall remove from the work area all debris, waste, loose reflective media, and by-products generated by the surface preparation and application operations to the satisfaction of Engineer. Contractor shall dispose of these wastes in strict compliance with all applicable state, local, and federal environmental statutes and regulations.

METHOD OF MEASUREMENT

620-4.1a Not used.

620-4.1b Quantity of markings shall be paid for shall be measured by the number of square feet of painting**.**

620-4.1c Not used.

620-4.1d Not used.

620-4.1e Not used.

BASIS OF PAYMENT

620-5.1 This price shall be full compensation for furnishing all materials and for all labor, equipment, tools, and incidentals necessary to complete the item complete in place and accepted by Engineer in accordance with these specifications.

620-5.2 Payment for markings shall be made at the contract price for the number of square feet of painting including reflective media (beads).

Payment will be made under:

Item P-620-5.2	Marking including reflective media (beads), per square foot

REFERENCES

The publications listed below form a part of this specification to the extent referenced. The publications are referred to within the text by the basic designation only.

ASTM International (ASTM)

ASTM D476	Standard Classification for Dry Pigmentary Titanium Dioxide Products
ASTM D968	Standard Test Methods for Abrasion Resistance of Organic Coatings by Falling Abrasive
ASTM D1652	Standard Test Method for Epoxy Content of Epoxy Resins
ASTM D2074	Standard Test Method for Total, Primary, Secondary, and Tertiary Amine Values of Fatty Amines by Alternative Indicator Method
ASTM D2240	Standard Test Method for Rubber Property - Durometer Hardness
ASTM D7585	Standard Practice for Evaluating Retroreflective Pavement Markings Using Portable Hand-Operated Instruments
ASTM E303	Standard Test Method for Measuring Surface Frictional Properties Using the British Pendulum Tester
ASTM E1710	Standard Test Method for Measurement of Retroreflective Pavement Marking Materials with CEN-Prescribed Geometry Using a Portable Retroreflectometer
ASTM E2302	Standard Test Method for Measurement of the Luminance Coefficient Under Diffuse Illumination of Pavement Marking Materials Using a Portable Reflectometer
ASTM G154	Standard Practice for Operating Fluorescent Ultraviolet (UV) Lamp Apparatus for Exposure of Nonmetallic Materials

Code of Federal Regulations (CFR)

40 CFR Part 60, Appendix A-7, Method 24
Determination of volatile matter content, water content, density, volume solids, and weight solids of surface coatings

29 CFR Part 1910.1200 Hazard Communication

Federal Specifications (FED SPEC)

FED SPEC TT-B-1325D	Beads (Glass Spheres) Retro-Reflective
FED SPEC TT-P-1952F	Paint, Traffic and Airfield Marking, Waterborne
FED STD 595	Colors used in Government Procurement

Commercial Item Description

A-A-2886B	Paint, Traffic, Solvent Based

Advisory Circulars (AC)

AC 150/5340-1	Standards for Airport Markings
AC 150/5320-12	Measurement, Construction, and Maintenance of Skid Resistant Airport Pavement Surfaces

END OF ITEM P-620

Item D-701 Pipe for Storm Drains and Culverts

DESCRIPTION

701-1.1 This item shall consist of the construction of pipe culverts and storm drains in accordance with these specifications and in reasonably close conformity with the lines and grades shown on the plans.

MATERIALS

701-2.1 Materials shall meet the requirements shown on the plans and specified below. Underground piping and components used in drainage systems for terminal and aircraft fueling ramp drainage shall be noncombustible and inert to fuel in accordance with National Fire Protection Association (NFPA) 415.

701-2.2 Pipe. The pipe shall be of the type called for on the plans or in the proposal and shall be in accordance with the following appropriate requirements:

ASTM C76	Standard Specification for Reinforced Concrete Culvert, Storm Drain, and Sewer Pipe

701-2.3 Concrete. Concrete for pipe cradles shall have a minimum compressive strength of 3,500 psi at 28 days and conform to the requirements of ASTM C94.

701-2.4 Rubber gaskets. Not used.

701-2.5 Joint mortar. Pipe joint mortar shall consist of one part Portland cement and two parts sand. Portland cement shall conform to the requirements of ASTM C150, Type I. The sand shall conform to the requirements of ASTM C144.

701-2.6 Joint fillers. Poured filler for joints shall conform to the requirements of ASTM D6690.

701-2.7 Plastic gaskets. Not used.

701-2.8. Controlled low-strength material (CLSM). Controlled low-strength material shall conform to the requirements of Item P-153. When CLSM is used, all joints shall have gaskets.

701-2.9 Precast box culverts. Not used.

701-2.10 Precast concrete pipe. Precast concrete structures shall be furnished by a plant meeting National Precast Concrete Association Plant Certification Program or American Concrete Pipe Association QCast Plant Certification program.

CONSTRUCTION METHODS

701-3.1 Excavation. The width of pipe trench shall be sufficient to permit satisfactory jointing of pipe and thorough tamping of the bedding material under and around the pipe, but it shall not be less than the external diameter of the pipe plus 12 inches on each side. Trench walls shall be approximately vertical.

Contractor shall comply with all current federal, state, and local rules and regulations governing the safety of men and materials during excavation, installation, and backfilling operations. Specifically, Contractor shall observe that all requirements of the Occupational Safety and Health Administration (OSHA) relating to excavations, trenching and shoring are strictly adhered to. Trench width shall be sufficient to permit

satisfactorily jointing of the pipe and thorough compaction of the bedding material under the pipe and backfill material around the pipe, but it shall not be greater than the widths shown on the plans trench detail.

Where rock, hardpan, or other unyielding material is encountered, Contractor shall remove it from below the foundation grade for a depth of at least 8 inches or 1/2 inch for each foot of fill over the top of the pipe (whichever is greater) but for no more than three-quarters of the nominal diameter of the pipe. The excavation below grade should be filled with granular material to form a uniform foundation.

Where a firm foundation is not encountered at the grade established, due to soft, spongy, or other unstable soil, the unstable soil shall be removed and replaced with approved granular material for the full trench width. Engineer shall determine the depth of removal necessary. The granular material shall be compacted to provide adequate support for the pipe.

The excavation for pipes placed in embankment fill shall not be made until the embankment has been completed to a height above the top of the pipe as shown on the plans.

701-3.2 Bedding. The bedding surface for the pipe shall provide a foundation of uniform density to support the pipe throughout its entire length.

a. Rigid pipe. The pipe bedding shall be constructed uniformly for the full length of the pipe barrel, as required on the plans. The maximum aggregate size shall be 1 in when the bedding thickness is less than 6 inches, and 1-1/2 in when the bedding thickness is greater than 6 inches. Bedding shall be loosely placed uncompacted material under the middle third of the pipe prior to placement of the pipe.

701-3.3 Laying pipe. The pipe laying shall begin at the lowest point of the trench and proceed upgrade. The lower segment of the pipe shall be in contact with the bedding throughout its full length. Bell or groove ends of rigid pipes and outside circumferential laps of flexible pipes shall be placed facing upgrade.

Paved or partially lined pipe shall be placed so that the longitudinal center line of the paved segment coincides with the flow line.

Elliptical and elliptically reinforced concrete pipes shall be placed with the manufacturer's reference lines designating the top of the pipe within five degrees of a vertical plane through the longitudinal axis of the pipe.

701-3.4 Joining pipe. Joints shall be made with cement mortar or cement grout.

Mortar joints shall be made with an excess of mortar to form a continuous bead around the outside of the pipe and shall be finished smooth on the inside. Molds or runners shall be used for grouted joints to retain the poured grout. Rubber ring gaskets shall be installed to form a flexible watertight seal.

a. Concrete pipe. Concrete pipe may be either bell and spigot or tongue and groove. Pipe sections at joints shall be fully seated and the inner surfaces flush and even. Concrete pipe joints shall be sealed with butyl mastic meeting ASTM C990 or mortar when soil tight joints are required. Joints shall be thoroughly wetted before applying mortar or grout.

701-3.5 Embedment and Overfill. Pipes shall be inspected before any fill material is placed; any pipes found to be out of alignment, unduly settled, or damaged shall be removed and re-laid or replaced at Contractor's expense.

701-3.5-1 Embedment Material Requirements

a. Concrete Pipe. Embedment material and compaction requirements shall be in accordance with the applicable Type of Standard Installation (Types 1, 2, 3, or 4) per ASTM C1479. If a concrete cradle or CLSM embedment material is used, it shall conform to the plan details.

701-3.5-2 Placement of Embedment Material

The embedment material shall be compacted in layers not exceeding 6 inches on each side of the pipe and shall be brought up 1 foot above the top of the pipe or to natural ground level, whichever is greater. Thoroughly compact the embedment material under the haunches of the pipe without displacing the pipe. Material shall be brought up evenly on each side of the pipe for the full length of the pipe.

When the top of the pipe is above the top of the trench, the embedment material shall be compacted in layers not exceeding 6 inches and shall be brought up evenly on each side of the pipe to 1 foot above the top of the pipe. All embedment material shall be compacted to a density required under Item P-152.

Concrete cradles and flowable fills, such as controlled low strength material (CLSM) or controlled density fill (CDF), may be used for embedment provided adequate flotation resistance can be achieved by restraints, weighing, or placement technique.

It shall be Contractor's responsibility to protect installed pipes and culverts from damage due to construction equipment operations. Contractor shall be responsible for installation of any extra strutting or backfill required to protect pipes from the construction equipment.

701-3.6 Overfill

Pipes shall be inspected before any overfill is in place. Any pipes found to be out of alignment, unduly settled, or damaged shall be removed and relaid or replaced at Contractor expense. Evaluation of any damage to RCP shall be evaluated based on AASHTO R73.

Overfill material shall be place and compacted in layers as required to achieve compaction to at least 95% standard proctor per ASTM D698. The soil shall contain no debris, organic matter, frozen material, or stones with a diameter greater than one half the thickness of the compacted layers being placed.

701-3.7 Inspection Requirements

An initial post installation inspection shall be performed by RPR no sooner than 30 days after completion of installation and final backfill. Clean or flush all lines prior to inspection.

Use a camera with lighting suitable to allow a clear picture of the entire periphery of the pipe interior. Center the camera in the pipe both vertically and horizontally and be able to pan and tilt to a 90-degree angle with the axis of the pipe rotating 360 degrees. Use equipment to move the camera through the pipe that will not obstruct the camera's view or interfere with proper documentation of the pipe's condition. The video image shall be clear, focused, and relatively free from roll, static, or other image distortion qualities that would prevent the reviewer from evaluating the condition of the pipe.

For pipe sizes larger than 48 inches, a walk-through visual inspection shall be performed.

Incorporate specific inspection requirements for the various types of pipes beneath the general inspection requirements.

Reinforced concrete pipe shall be inspected, evaluated, and reported on in accordance with ASTM C1840, "Standard Practice for Inspection and Acceptance of Installed Reinforced Concrete Culvert, Storm Drain, and Storm Sewer Pipe." Any issues reported shall include still photo and video documentation. The zoom ratio shall be provided for all still or video images that document any issues of concern by the inspection firm.

METHOD OF MEASUREMENT

701-4.1 The length of pipe shall be measured in linear feet of pipe in place, completed, and accepted. It shall be measured along the centerline of the pipe from end or inside face of structure to the end or inside

face of structure, whichever is applicable. 42-inch or 27-inch RCP shall be measured separately. All fittings shall be included in the footage as typical pipe sections in the pipe being measured.

701-4.2. Not used.

701-4.3 Not used. Incidental to other work items.

701-4.4 Not used. Incidental to other work items.

BASIS OF PAYMENT

701-5.0 These prices shall fully compensate Contractor for furnishing all materials and for all preparation, excavation, and installation of these materials; and for all labor, equipment, tools, and incidentals necessary to complete the item.

701-5.1 Payment will be made at the contract unit price per linear foot for 42-inch or 27-inch RCP.

Payment will be made under:

Item 701-5.1	27-inch Reinforced Concrete Pipe, per linear foot, complete in place
Item 701-5.2	42-inch Reinforced Concrete Pipe, per linear foot, complete in place

REFERENCES

The publications listed below form a part of this specification to the extent referenced. The publications are referred to within the text by the basic designation only.

ASTM International (ASTM)

ASTM C76	Standard Specification for Reinforced Concrete Culvert, Storm Drain, and Sewer Pipe
ASTM C94	Standard Specification for Ready Mixed Concrete
ASTM C144	Standard Specification for Aggregate for Masonry Mortar
ASTM C150	Standard Specification for Portland Cement
ASTM D3282	Standard Practice for Classification of Soils and Soil-Aggregate Mixtures for Highway Construction Purposes

National Fire Protection Association (NFPA)

NFPA 415	Standard on Airport Terminal Buildings, Fueling Ramp Drainage, and Loading Walkways

END ITEM D-701

Item D-752 Concrete Culverts, Headwalls, and Miscellaneous Drainage Structures

DESCRIPTION

752-1.1 This item shall consist of reinforced concrete culverts, headwalls, and miscellaneous drainage structures constructed in accordance with these specifications, at the specified locations and conforming to the lines, grades, and dimensions shown on the plans or required by Engineer.

MATERIALS

752-2.1 Concrete. Reinforced concrete shall meet the requirements of Item P-610.

CONSTRUCTION METHODS

752-3.1 Unclassified excavation.

a. Trenches and foundation pits for structures or structure footings shall be excavated to the lines and grades and elevations shown on the plans. The excavation shall be of sufficient size to permit the placing of the full width and length of the structure or structure footings shown. The elevations of the bottoms of footings, as shown on the plans, shall be considered as approximate only; and Engineer may approve, in writing, changes in dimensions or elevations of footings necessary to secure a satisfactory foundation.

b. Boulders, logs, or any other objectionable material encountered in excavation shall be removed. All rock or other hard foundation material shall be cleaned of all loose material and cut to a firm surface either level, stepped, or serrated, as directed by Engineer. All seams or crevices shall be cleaned out and grouted. All loose and disintegrated rock and thin strata shall be removed. When concrete will rest on a surface other than rock, the bottom of the excavation shall not be disturbed and excavation to final grade shall not be made until immediately before the concrete or reinforcing steel is placed.

c. Contractor shall do all bracing, sheathing, or shoring necessary to perform and protect the excavation and the structure as required for safety or conformance to governing laws. The cost of bracing, sheathing, or shoring shall be included in the unit price bid for excavation.

d. All bracing, sheathing, or shoring shall be removed by Contractor after the completion of the structure. Removal shall not disturb or damage the finished concrete. The cost of removal shall be included in the unit price bid for excavation.

e. After each excavation is completed, Contractor shall notify Engineer. No concrete or reinforcing steel shall be placed until Engineer has approved the depth of the excavation and the character of the foundation material.

752-3.2 Backfilling.

a. After a structure has been completed, backfilling with approved material shall be accomplished by applying the fill in horizontal layers not to exceed 8 inches in loose depth, and compacted. The field density of the compacted material shall be at least 90% of the maximum density for cohesive soils and 95% of the maximum density for noncohesive soils. The maximum density shall be determined in accordance with ASTM D698. The field density shall be determined in accordance with ASTM D1556.

b. No backfilling shall be placed against any structure until approved by Engineer. For concrete, approval shall not be given until the concrete has been in place seven days, or until tests establish that the concrete has attained sufficient strength to withstand any pressure created by the backfill or the placement methods.

c. Fill placed around concrete culverts shall be deposited on each side at the same time and to approximately the same elevation. All slopes bounding or within the areas to be backfilled shall be stepped or serrated to prevent wedge action against the structure.

d. Backfill will not be measured for direct payment. Performance of this work shall be considered as a subsidiary obligation of Contractor, covered under the contract unit price for "unclassified excavation for structures."

752-3.3 Weep holes. Weep holes shall be constructed as shown on the plans.

752-3.4 Cleaning and restoration of site. After the backfill is completed, Contractor shall dispose of all surplus material, dirt, and rubbish from the site. Surplus dirt may be deposited in embankment, shoulders, or as approved by RPR. Contractor shall restore all disturbed areas to their original condition. Contractor shall remove all tools and equipment, leaving the entire site free, clear, and in good condition.

METHOD OF MEASUREMENT

752-4.1 The quantity of unclassified excavation for structures is measured and paid under Item P-152. Quantity of reinforced concrete culvert end-treatment headwalls shall be the number of end-treatments shown on Plans, complete in place, and accepted.

BASIS OF PAYMENT

752-5.1 Payment will be made at the contract unit price per each for 27-inch or 42-inch reinforced concrete culvert end-treatment headwall, complete in place.

These prices shall be full compensation for furnishing all materials and for all preparation, excavation, and placing the materials, and for all labor, equipment, tools, and incidentals necessary to complete the structure.

Payment will be made under:

Item D-752-5.1	27-inch Concrete-Reinforced Safety End Treatment, per each, complete in place
Item D-752-5.2	42-inch Concrete-Reinforced Safety End Treatment, per each, complete in place

REFERENCES

The publications listed below form a part of this specification to the extent referenced. The publications are referred to within the text by the basic designation only.

ASTM International (ASTM)

ASTM D698	Standard Test Methods for Laboratory Compaction Characteristics of Soil Using Standard Effort (12,400 ft-lb/ft^3 (600 kN-m/m^3))
ASTM D1556	Standard Test Method for Density and Unit Weight of Soil in Place by the Sand-Cone Method

END OF ITEM D-752

Item T-901 Seeding

DESCRIPTION

901-1.1 This item shall consist of soil preparation, seeding, fertilizing, and watering areas shown on the plans or as directed by Engineer in accordance with these specifications.

MATERIALS

901-2.1 Seed. The species and application rates of grass, legume, and cover-crop seed furnished shall be those stipulated herein. Seed shall conform to the requirements of Federal Specification JJJ-S-181, Federal Specification, Seeds, Agricultural or Project's local TxDOT District Seed Mix Design.

Seed shall be furnished separately or in mixtures in standard containers labeled in conformance with the Agricultural Marketing Service (AMS) Seed Act and applicable state seed laws with the seed name, lot number, net weight, percentages of purity and of germination and hard seed, and percentage of maximum weed seed content clearly marked for each kind of seed. Contractor shall furnish Engineer duplicate signed copies of a statement by the vendor certifying that each lot of seed has been tested by a recognized laboratory for seed testing within six months of date of delivery. This statement shall include name and address of laboratory, date of test, lot number for each kind of seed, and the results of tests as to name, percentages of purity and of germination, and percentage of weed content for each kind of seed furnished, and, in case of a mixture, the proportions of each kind of seed. Wet, moldy, or otherwise damaged seed will be rejected. Seeds shall be applied as follows:

Seed Properties and Rate of Application

Seed	Minimum Seed Purity (Percent)	Minimum Germination (Percent)	Rate of Application lb/acre (or lb/1,000 S.F.)
*	*	*	*
*	*	*	*

Quantity of Pure Live Seed (PLS)[1] (Option 1)

Seed Common Name	Mixture Quantity, PLS/acre
Green Sprangletop (Van Horn)	1.0
Sideoats Grama (Haskel)	1.0
Texas Grama (Atascosa)	1.0
Hairy Grama (Chaparral)	0.4
Shortspike Windmillgrass (Welder)	0.2
Little Bluestem (OK Select)	0.8
Purple Prairie Cover (Cuero)	0.6
Engelmann Daisy (Eldorado)	0.75
Illinois Bundleflower	1.3
Awnless Bushsunflower (Plateau)	0.2

[1]Payment not made for soil preparation, seeding, and fertilizing prior to planting and establishing stand of grass covering a minimum of 70% of the seeded area in comparison to the surrounding grassed area.

Seeding shall be performed during such periods as recommended by local County Extension Agent or USDA Soil Conservation Services and shall be compatible with local climate and soil conditions.

If construction completion does not coincide with a recommended planting period, Contractor shall be responsible for maintaining the areas to be seeded in accordance Item C-102 Temporary Air and Water Pollution, Soil Erosion, and Siltation Control, until the accepted stand of grass is produced. Contractor attention is also directed to the 70% vegetative cover requirement indicated by the definition of Final Stabilization in TPDES Construction General Permit (TXR 150000).

901-2.2 Lime. Not required.

901-2.3 Fertilizer. Fertilizer shall be standard commercial fertilizers supplied separately or in mixtures containing percentages of total nitrogen, available phosphoric acid, and water-soluble potash. They shall be applied at rate and depth specified and meet requirements of applicable state laws. They shall be furnished in standard containers with name, weight, and guaranteed analysis of contents clearly marked thereon. No cyanamide compounds or hydrated lime shall be permitted in mixed fertilizers. The fertilizers may be supplied in one of the following forms:

a. A dry, free-flowing fertilizer suitable for application by a common fertilizer spreader;

b. A finely-ground fertilizer soluble in water, suitable for application by power sprayers; or

c. A granular or pellet form suitable for application by blower equipment.

Fertilizers shall be slow-release containing minimum N:10 - P:10 - K:10 commercial fertilizer and shall be spread at the rate of 350 lb/acre.

901-2.4 Soil for repairs. The soil for fill and topsoiling of areas to be repaired shall be at least of equal quality to that which exists in areas adjacent to the area to be repaired. The soil shall be relatively free from large stones, roots, stumps, or other materials that will interfere with subsequent sowing of seed, compacting, and establishing turf, and shall be approved by RPR before being placed.

CONSTRUCTION METHODS

901-3.1 Advance preparation and cleanup. After grading of areas has been completed and before applying fertilizer and ground limestone, areas to be seeded shall be raked or otherwise cleared of stones larger than 2 inches in any diameter, sticks, stumps, and other debris that might interfere with sowing of seed, growth of grasses, or subsequent maintenance of grass-covered areas. If any damage by erosion or other causes has occurred after the completion of grading and before beginning the application of fertilizer and ground limestone, Contractor shall repair such damage include filling gullies, smoothing irregularities, and repairing other incidental damage.

An area to be seeded shall be considered a satisfactory seedbed without additional treatment if it has recently been thoroughly loosened and worked to a depth of not less than 5 inches as a result of grading operations and, if immediately prior to seeding, the top 3 inches of soil is loose, friable, reasonably free from large clods, rocks, large roots, or other undesirable matter, and if shaped to the required grade.

When the area to be seeded is sparsely sodded, weedy, barren, and unworked, or packed and hard, any grass and weeds shall first be cut or otherwise satisfactorily disposed of, and the soil then scarified or otherwise loosened to a depth not less than 5 inches. Clods shall be broken and the top 3 inches of soil shall be worked into a satisfactory seedbed by discing, or by use of cultipackers, rollers, drags, harrows, or other appropriate means.

901-3.2 Dry application method.

a. Liming. Not required.

b. Fertilizing. Following advance preparations and cleanup fertilizer shall be uniformly spread at rate to provide not less than minimum quantity stated in paragraph 901-2.3.

c. Seeding. Grass seed shall be sown at the rate specified in paragraph 901-2.1 immediately after fertilizing. The fertilizer and seed shall be raked within the depth range stated in the special provisions. Seeds of legumes, either alone or in mixtures, shall be inoculated before mixing or sowing, in accordance with the instructions of the manufacturer of the inoculant. When seeding is required at other than the seasons shown on the plans or in the special provisions, a cover crop shall be sown by the same methods required for grass and legume seeding.

d. Rolling. After the seed has been properly covered, the seedbed shall be immediately compacted by means of an approved lawn roller, weighing 40-65 pounds per foot of width for clay soil (or any soil having a tendency to pack), and weighing 150-200 pounds per foot of width for sandy or light soils.

901-3.3 Wet application method.

a. General. Contractor may elect to apply seed and fertilizer (and lime, if required) by spraying them on the previously prepared seedbed in the form of an aqueous mixture and by using the methods and equipment described herein. The rates of application shall be as specified in the special provisions.

b. Spraying equipment. The spraying equipment shall have a container or water tank equipped with a liquid level gauge calibrated to read in increments not larger than 50 gallons over the entire range of the tank capacity, mounted to be visible to the nozzle operator. The container or tank shall also be equipped with a mechanical power-driven agitator capable to always keep all solids in mixture in complete suspension until used.

The unit shall also be equipped with a pressure pump capable of delivering 100 gallons (380 liters) per minute at a pressure of 100 lb/sq inches. The pump shall be mounted in a line that will recirculate the mixture through the tank whenever it is not being sprayed from the nozzle. All pump passages and pipelines shall be capable of providing clearance for 5/8 inch solids. The power unit for the pump and agitator shall have controls mounted to be accessible to the nozzle operator. There shall be an indicating pressure gauge connected and mounted immediately at the back of the nozzle.

The nozzle pipe shall be mounted on an elevated supporting stand in such a manner that it can be rotated through 360 degrees horizontally and inclined vertically from at least 20 degrees below to at least 60 degrees above the horizontal. There shall be a quick-acting, three-way control valve connecting the recirculating line to the nozzle pipe and mounted so that the nozzle operator can control and regulate the amount of flow of mixture delivered to the nozzle. At least three different types of nozzles shall be supplied so that mixtures may be properly sprayed over distance varying from 20 to 100 feet. One shall be a close-range ribbon nozzle, one a medium-range ribbon nozzle, and one a long-range jet nozzle. For case of removal and cleaning, all nozzles shall be connected to the nozzle pipe by means of quick-release couplings.

To reach areas inaccessible to the regular equipment, an extension hose at least 50 feet in length shall be provided to which the nozzles may be connected.

c. Mixtures. Lime, if required, shall be applied separately, in the quantity specified, prior to the fertilizing and seeding operations. Not more than 220 pounds of lime shall be added to and mixed with each 100 gallons of water. Seed and fertilizer shall be mixed in the relative proportions specified, but not more than a total of 220 pounds of these combined solids shall be added to and mixed with each 100 gallons of water.

All water used shall be obtained from fresh water sources and shall be free from injurious chemicals and other toxic substances harmful to plant life. Contractor shall identify to Engineer all sources of water at least two weeks prior to use. RPR may take samples of the water at the source or from the tank at any time and have a laboratory test the samples for chemical and saline content. Contractor shall not use any water from any source that is disapproved by RPR following such tests.

All mixtures shall be constantly agitated from the time they are mixed until they are finally applied to the seedbed. All such mixtures shall be used within two hours from time they were mixed or waste and dispose at approved locations.

d. Spraying. Lime, if required, shall be sprayed only upon previously prepared seedbeds. After the applied lime mixture has dried, the lime shall be worked into the top 3 inches, after which the seedbed shall again be properly graded and dressed to a smooth finish.

Mixtures of seed and fertilizer shall only be sprayed upon previously prepared seedbeds on which the lime, if required, shall already have been worked in. The mixtures shall be applied by means of a high-pressure spray that shall always be directed upward into the air so that the mixtures will fall to the ground like rain in a uniform spray. Nozzles or sprays shall never be directed toward the ground in such a manner as might produce erosion or runoff.

Exercise care to ensure application is made uniformly and at the prescribed rate and to guard against misses and overlapped areas. Proper predetermined quantities of the mixture in accordance with specifications shall be used to cover specified sections of known area.

Checks on the rate and uniformity of application may be made by observing the degree of wetting of the ground or by distributing test sheets of paper or pans over the area at intervals and observing the quantity of material deposited thereon.

On surfaces that are to be mulched as indicated by the plans or designated by Engineer, seed and fertilizer applied by the spray method need not be raked into the soil or rolled. However, on surfaces on which mulch is not to be used, the raking and rolling operations will be required after the soil has dried.

901-3.4 Maintenance of seeded areas. Contractor shall protect seeded areas against traffic or other use by warning signs or barricades, as approved by Engineer. Surfaces gullied or otherwise damaged following seeding shall be repaired by regrading and reseeding as directed. Contractor shall mow, water as directed, and otherwise maintain seeded areas in a satisfactory condition until final inspection and acceptance of the work.

When either the dry or wet application method outlined above is used for work done out of season, it will be required that Contractor establish a good stand of grass of uniform color and density to the satisfaction of RPR. A grass stand shall be considered adequate when bare spots are 1 square foot or less, randomly dispersed, and do not exceed 3% of the area seeded.

METHOD OF MEASUREMENT

901-4.1 The quantity of soil preparation, seeding, fertilizing, and watering to be paid for shall be the number of acre measured on the ground surface within limits shown on drawings or as directed by Engineer, completed and accepted.

BASIS OF PAYMENT

901-5.1 Payment shall be made at the contract unit price per acre for soil preparation, seeding, fertilizing, and watering, which price and payment shall be full compensation for furnishing and placing all material and for all labor, equipment, tools, and incidentals necessary to complete the work prescribed in this item. Payment for this item will not be made prior to planting and establishing a 70% stand of grass in comparison to the surrounding grassed area. The quantity of T-901 shown in the proposal coincides with the limits of grading outside of the pavement areas.

Payment will be made under:

Item 901-5.1	Seeding, Fertilizing, and Watering, complete, per acre.

REFERENCES

The publications listed below form a part of this specification to the extent referenced. The publications are referred to within the text by the basic designation only.

ASTM International (ASTM)

ASTM C602	Standard Specification for Agricultural Liming Materials

Federal Specifications (FED SPEC)

FED SPEC	JJJ-S-181, Federal Specification, Seeds, Agricultural

Advisory Circulars (AC)

AC 150/5200-33	Hazardous Wildlife Attractants on or Near Airports

FAA/United States Department of Agriculture

Wildlife Hazard Management at Airports, A Manual for Airport Personnel

END OF ITEM T-901

Item T-905 Topsoil

DESCRIPTION

905-1.1 This item shall consist of preparing the ground surface for topsoil application, removing topsoil from designated stockpiles or areas to be stripped on the site or from approved sources off the site, and placing and spreading the topsoil on prepared areas in accordance with this specification at the locations shown on the plans or as directed by ENGINEER.

MATERIALS

905-2.1 Topsoil. Topsoil shall be the surface layer of soil with no admixture of refuse or any material toxic to plant growth, and it shall be reasonably free from subsoil and stumps, roots, brush, stones (2 inches or more in diameter), and clay lumps or similar objects. Brush and other vegetation that will not be incorporated with the soil during handling operations shall be cut and removed. Ordinary sod and herbaceous growth such as grass and weeds are not to be removed but shall be thoroughly broken up and intermixed with the soil during handling operations. Heavy sod or other cover, which cannot be incorporated into the topsoil by discing or other means, shall be removed. The topsoil or soil mixture, unless otherwise specified or approved, shall have a pH range of approximately 5.5 pH to 7.6 pH, when tested in accordance with the methods of testing of the Association of Official Agricultural Chemists in effect on the date of invitation of bids. The organic content shall be not less than 3% nor more than 20% as determined by the wet-combustion method (chromic acid reduction). There shall be not less than 20% nor more than 80% of the material passing the 200 mesh sieve as determined by the wash test in accordance with ASTM C117.

Topsoil (onsite or imported) shall be amended by Contractor with approved high-organic-material compost at a rate of 5 cubic yards per 1,000 square feet to meet specifications. Compost shall not be a wildlife attractant nor FOD producing. Natural topsoil may be amended by Contractor with approved materials and methods to meet the above specifications.

905-2.2 Inspection and tests. Within 10 days following acceptance of the bid, ENGINEER shall be notified of the source of topsoil to be furnished by Contractor. The topsoil shall be inspected to determine if the selected soil meets the requirements specified and to determine the depth to which stripping will be permitted. At this time, Contractor may be required to take representative soil samples from several locations within the area under consideration and to the proposed stripping depths, for testing purposes as specified in paragraph 905-2.1.

CONSTRUCTION METHODS

905-3.1 General. Areas to be topsoiled shall be shown on the plans. If topsoil is available on the site, the location of the stockpiles or areas to be stripped of topsoil and the stripping depths shall be shown on the plans.

Suitable equipment necessary for proper preparation and treatment of the ground surface, stripping of topsoil, and for the handling and placing of all required materials shall be on hand, in good condition, and approved by ENGINEER before the various operations are started.

905-3.2 Preparing the ground surface. Immediately prior to dumping and spreading the topsoil on any area, the surface shall be loosened by discs or spike-tooth harrows, or by other means approved by ENGINEER, to a minimum depth of 2 inches to facilitate bonding of the topsoil to the covered subgrade soil. The surface of the area to be topsoiled shall be cleared of all stones larger than 2 inches in any diameter and all litter or other material which may be detrimental to proper bonding, the rise of capillary moisture, or the proper growth of the desired planting. Limited areas, as shown on the plans, which are too compact to respond to these operations shall receive special scarification.

Grades on the area to be topsoiled, which have been established by others as shown on the plans, shall be maintained in a true and even condition. Where grades have not been established, the areas shall be smooth-graded and the surface left at the prescribed grades in an even and compacted condition to prevent the formation of low places or pockets where water will stand.

905-3.3 Obtaining topsoil. Prior to the stripping of topsoil from designated areas, any vegetation, briars, stumps and large roots, rubbish or stones found on such areas, which may interfere with subsequent operations, shall be removed using methods approved by ENGINEER. Heavy sod or other cover, which cannot be incorporated into the topsoil by discing or other means shall be removed.

When suitable topsoil is available on the site, Contractor shall remove this material from the designated areas and to the depth as directed by ENGINEER. The topsoil shall be spread on areas already tilled and smooth-graded or stockpiled in areas approved by ENGINEER. Any topsoil stockpiled by Contractor shall be rehandled and placed without additional compensation. Any topsoil that has been stockpiled on the site by others, and is required for topsoil purposes, shall be removed and placed by Contractor. The sites of all stockpiles and areas adjacent thereto which have been disturbed by Contractor shall be graded if required and put into a condition acceptable for seeding.

When suitable topsoil is secured off the airport site, Contractor shall locate and obtain the supply, subject to the approval of ENGINEER. Contractor shall notify ENGINEER sufficiently in advance of operations in order that necessary measurements and tests can be made. Contractor shall remove the topsoil from approved areas and to the depth as directed. The topsoil shall be hauled to the site of the work and placed for spreading or spread as required. Any topsoil hauled to the site of the work and stockpiled shall be rehandled and placed without additional compensation.

905-3.4 Placing topsoil. The topsoil shall be evenly spread on the prepared areas to a uniform depth of 2 inches after compaction, unless otherwise shown on the plans or stated in the special provisions. Spreading shall not be done when the ground or topsoil is frozen, excessively wet, or otherwise in a condition detrimental to the work. Spreading shall be carried on so that turfing operations can proceed with a minimum of soil preparation or tilling.

After spreading, any large, stiff clods and hard lumps shall be broken with a pulverizer or by other effective means, and all stones or rocks (2 inches or more in diameter), roots, litter, or any foreign matter shall be raked up and disposed of by Contractor. after spreading is completed, the topsoil shall be satisfactorily compacted by rolling with a cultipacker or by other means approved by ENGINEER. The compacted topsoil surface shall conform to the required lines, grades, and cross-sections. Any topsoil or other dirt falling upon pavements as a result of hauling or handling of topsoil shall be promptly removed.

METHOD OF MEASUREMENT

905-4.1 Topsoil obtained on the site shall be measured by the number of square yards of topsoil measured in its original position and stripped or excavated. Topsoil stockpiled and then placed by Contractor shall be measured by the number of cubic yards of topsoil measured based on footprint of area to receive topsoil times the specified thickness of topsoil.

BASIS OF PAYMENT

905-5.1 Payment will be made at the contract unit price per square yard for topsoil (obtained on the site). This price shall be full compensation for furnishing all materials and for all preparation, placing, and spreading of the materials, and for all labor, equipment, tools, and incidentals necessary to complete the item. Specified soil amendment is considered incidental.

Payment will be made under:

Item T-905-5.1	Topsoil (obtained on site, stockpiled, then placed including amendment), per square yard

REFERENCES

The publications listed below form a part of this specification to the extent referenced. The publications are referred to within the text by the basic designation only.

ASTM International (ASTM)

ASTM C117	Materials Finer than 75 μm (No. 200) Sieve in Mineral Aggregates by Washing

Advisory Circulars (AC)

AC 150/5200-33	Hazardous Wildlife Attractants on or Near Airports

FAA/United States Department of Agriculture

Wildlife Hazard Management at Airports, A Manual for Airport Personnel

END OF ITEM T-905

Item L-108 Underground Power Cable for Airports

DESCRIPTION

108-1.1 This item shall consist of furnishing and installing power cables that are direct buried and furnishing and/or installing power cables within conduit or duct banks per these specifications at the locations shown on the plans. It includes excavation and backfill of trench for direct-buried cables only. Also included are the installation of counterpoise wires, ground wires, ground rods and connections, cable splicing, cable marking, cable testing, and all incidentals necessary to place the cable in operating condition as a completed unit to the satisfaction of Engineer. This item shall not include the installation of duct banks or conduit, trenching and backfilling for duct banks or conduit, or furnishing or installation of cable for FAA owned/operated facilities.

EQUIPMENT AND MATERIALS

108-2.1 General.

a. Airport lighting equipment and materials covered by advisory circulars (AC) shall be approved under the Airport Lighting Equipment Certification Program per AC 150/5345-53, current version.

b. All other equipment and materials covered by other referenced specifications shall be subject to acceptance through manufacturer's certification of compliance with the applicable specification, when requested by Engineer.

c. Manufacturer's certifications shall not relieve Contractor of the responsibility to provide materials per these specifications. Materials supplied and/or installed that do not comply with these specifications shall be removed (when directed by Engineer) and replaced with materials that comply with these specifications at Contractor's cost.

d. All materials and equipment used to construct this item shall be submitted to Engineer for approval prior to ordering the equipment. Submittals consisting of marked catalog sheets or shop drawings shall be provided. Submittal data shall be presented in a clear, precise and thorough manner. Original catalog sheets are preferred. Photocopies are acceptable provided they are as good a quality as the original. Clearly and boldly mark each copy to identify products or models applicable to this project. Indicate all optional equipment and delete any non-pertinent data. Submittals for components of electrical equipment and systems shall identify the equipment to which they apply on each submittal sheet. Markings shall be made bold and clear with arrows or circles (highlighting is not acceptable). Contractor is solely responsible for delays in the project that may accrue directly or indirectly from late submissions or resubmissions of submittals.

e. The data submitted shall be sufficient, in the opinion of Engineer, to determine compliance with the plans and specifications. Contractor submittals shall be electronically submitted in pdf format. Engineer reserves the right to reject any and all equipment, materials, or procedures that do not meet the system design and the standards and codes, specified in this document.

f. All equipment and materials furnished and installed under this section shall be guaranteed against defects in materials and workmanship for at least 12 months from the date of final acceptance by Owner. The defective materials and/or equipment shall be repaired or replaced, at Owner's discretion, with no additional cost to Owner. Contractor shall maintain a minimum insulation resistance in accordance with

paragraph 108-3.10e with isolation transformers connected in new circuits and new segments of existing circuits through the end of the contract warranty period when tested in accordance with AC 150/5340-26, *Maintenance Airport Visual Aid Facilities*, paragraph 5.1.3.1, Insulation Resistance Test.

108-2.2 Cable. Underground cable for airfield lighting facilities (runway and taxiway lights and signs) shall conform to the requirements of AC 150/5345-7, Specification for L-824 Underground Electrical Cable for Airport Lighting Circuits latest edition. Conductors for use on 6.6 ampere primary airfield lighting series circuits shall be single conductor, seven strand, #8 American wire gauge (AWG), L-824 Type C, 5,000 volts, non-shielded, with cross-linked polyethylene insulation. L-824 conductors for use on the L-830 secondary of airfield lighting series circuits shall be sized in accordance with the manufacturer's recommendations. All other conductors shall comply with FAA and National Electric Code (NEC) requirements. Conductor sizes noted above shall not apply to leads furnished by manufacturers on airfield lighting transformers and fixtures.

Wire for electrical circuits up to 600 volts shall comply with Specification L-824 and/or Commercial Item Description A-A-59544A and shall be type THWN-2, 75°C for installation in conduit and RHW-2, 75°C for direct burial installations. Conductors for parallel (voltage) circuits shall be type and size and installed in accordance with NFPA-70, National Electrical Code.

Unless noted otherwise, all 600-volt and less non-airfield lighting conductor sizes are based on a 75°C, THWN-2, 600-volt insulation, copper conductors, not more than three single insulated conductors, in raceway, in free air. The conduit/duct sizes are based on the use of THWN-2, 600-volt insulated conductors. Contractor shall make the necessary increase in conduit/duct sizes for other types of wire insulation. In no case shall the conduit/duct size be reduced. The minimum power circuit wire size shall be #12 AWG.

Conductor sizes may have been adjusted due to voltage drop or other engineering considerations. Equipment provided by Contractor shall be capable of accepting the quantity and sizes of conductors shown in the Contract Documents. All conductors, pigtails, cable step-down adapters, cable step-up adapters, terminal blocks, and splicing materials necessary to complete the cable termination/splice shall be considered incidental to the respective pay items provided.

Cable type, size, number of conductors, strand and service voltage shall be as specified in the Contract Document.

108-2.3 Bare copper wire (counterpoise, bare copper wire ground and ground rods). Wire for counterpoise or ground installations for airfield lighting systems shall be No. 6 AWG bare solid copper wire for counterpoise and/or No. 6 AWG insulated stranded for grounding bond wire per ASTM B3 and ASTM B8 and shall be bare copper wire. For voltage powered circuits, the equipment grounding conductor shall comply with NEC Article 250.

Ground rods shall be copper-clad steel. The ground rods shall be of the length and diameter specified on the plans, but in no case be less than 10 feet long and 3/4 inch in diameter.

108-2.4 Cable connections. In-line connections or splices of underground primary cables shall be of the type called for on the plans and shall be one of the types listed below. No separate payment will be made for cable connections.

a. The cast splice. A cast splice, employing a plastic mold and using epoxy resin equivalent to that manufactured by 3M™ Company, "Scotchcast" Kit No. 82-B, or an approved equivalent, used for potting the splice is acceptable.

b. The field-attached plug-in splice. Field attached plug-in splices shall be installed as shown on the plans. Contractor shall determine the outside diameter of the cable to be spliced and furnish appropriately sized connector kits and/or adapters. Primary Connector Kits manufactured by Amerace, "Super Kit", Integro "Complete Kit", or approved equal is acceptable. The use of heat shrink tubing is prohibited.

c. The factory-molded plug-in splice. Specification for L-823 Connectors, Factory-Molded to Individual Conductors, is acceptable. The use of heat shrink tubing is prohibited.

d. The taped or heat-shrink splice. Not used.

All connections of counterpoise, grounding conductors and ground rods shall be made by the exothermic process or approved equivalent, except that a light base ground clamp connector shall be used for attachment to the light base. All exothermic connections shall be made per the manufacturer's recommendations and listings.

108-2.5 Splicer qualifications. Every airfield lighting cable splicer shall be qualified in making airport cable splices and terminations on cables rated at or above 5,000 volts AC. Contractor shall submit to Engineer proof of the qualifications of each proposed cable splicer for the airport cable type and voltage level to be worked on. Cable splicing/terminating personnel shall have a minimum of three years' continuous experience in terminating/splicing medium voltage cable. [*Proof of each splicer's qualification shall include a brief resume of their qualifications, certificates from splice kit manufacturer's training program, photo identification, and a sample splice. These items shall be included with the cable splice kit submittal. Each splicer shall submit a sample splice to Engineer (ship direct to electrical engineer in a rigid container.) Each sample splice shall be tagged and signed by its splicer. Each splice shall consist of a completed L823, Type I, Class B, Style 3 and Style 10 primary connector (super) kit having three feet of submitted and approved L-824 cable attached to each end of the connected splices. Plug and receptacle shall be connected by the splicer as they intend their work to be found in the field. Engineer shall review the materials and test submitted samples. Sample tests will be conducted at 1000-vdc after the connected splice has been submerged under water for 24 hours. An insulation resistance of greater than 500 Meg-ohms is required. Each splicer's sample must pass the insulation test to be qualified. Samples remain the property of Engineer and will not be returned. Only qualified splicers shall be allowed to terminate L-824 cable*].

108-2.6 Concrete. Concrete shall be proportioned, placed, and cured per Item P-610, Concrete for Miscellaneous Structures.

108-2.7 Flowable backfill. Flowable material used to backfill trenches for power cable trenches shall conform to the requirements of Item P-153, Controlled Low Strength Material.

108-2.8 Cable identification tags. Cable identification tags shall be made from a non-corrosive material with the circuit identification stamped or etched onto the tag. The tags shall be of the type as detailed on the plans.

108-2.9 Tape. Electrical tapes shall be Scotch™ Electrical Tapes –Scotch™ 88 (1-1/2 inch wide) and Scotch™ 130C® linerless rubber splicing tape (2-inch wide), as manufactured by the Minnesota Mining and Manufacturing Company (3M™), or an approved equivalent.

108-2.10 Electrical coating. Electrical coating shall be Scotchkote™ as manufactured by 3M™, or an approved equivalent.

108-2.11 Existing circuits. Whenever the scope of work requires connection to an existing circuit, the existing circuit's insulation resistance shall be tested, in the presence of Engineer. The test shall be performed per this item and prior to any activity that will affect the respective circuit. Contractor shall record the results on forms acceptable to Engineer. When the work affecting the circuit is complete, the circuit's insulation resistance shall be checked again, in the presence of Engineer. Contractor shall record the results on forms acceptable to Engineer. The second reading shall be equal to or greater than the first reading or Contractor shall make the necessary repairs to the existing circuit to bring the second reading above the first reading. All repair costs including a complete replacement of the L-823 connectors, L-830

transformers and L-824 cable, if necessary, shall be borne by Contractor. All test results shall be submitted in the Operation and Maintenance (O&M) Manual.

108-2.12 Detectable warning tape. Plastic, detectable, American Public Works Association (APWA) Red (electrical power lines, cables, conduit, and lighting cable) with continuous legend tape shall be polyethylene film with a metalized foil core and shall be 3-6 inches wide. Detectable tape is incidental to the respective bid item. Detectable warning tape for communication cables shall be orange. Detectable warning tape color code shall comply with the APWA Uniform Color Code.

CONSTRUCTION METHODS

108-3.1 General. Contractor shall install the specified cable at the approximate locations indicated on the plans. Unless otherwise shown on the plans, all cable required to cross under pavements expected to carry aircraft loads shall be installed in concrete encased duct banks. Cable shall be run without splices, from fixture to fixture.

Cable connections between lights will be permitted only at the light locations for connecting the underground cable to the primary leads of the individual isolation transformers. Contractor shall be responsible for providing cable in continuous lengths for home runs or other long cable runs without connections unless otherwise authorized in writing by Engineer or shown on the plans.

In addition to connectors being installed at individual isolation transformers, L-823 cable connectors for maintenance and test points shall be installed at locations shown on the plans. Cable circuit identification markers shall be installed on both sides of the L-823 connectors installed and on both sides of slack loops where a future connector would be installed.

Provide not less than 3 feet of cable slack on each side of all connections, isolation transformers, light units, and at points where cable is connected to field equipment. Where provisions must be made for testing or for future above grade connections, provide enough slack to allow the cable to be extended at least 1 foot vertically above the top of the access structure. This requirement also applies where primary cable passes through empty light bases, junction boxes, and access structures to allow for future connections, or as designated by Engineer.

Primary airfield lighting cables installed shall have cable circuit identification markers attached on both sides of each L-823 connector and on each airport lighting cable entering or leaving cable access points, such as manholes, hand holes, pull boxes, junction boxes, etc. Markers shall be of sufficient length for imprinting the cable circuit identification legend on one line, using letters not less than 1/4 inch in size. The cable circuit identification shall match the circuits noted on the construction plans.

108-3.2 Installation in duct banks or conduits. This item includes the installation of the cable in duct banks or conduit per the following paragraphs. The maximum number and voltage ratings of cables installed in each single duct or conduit, and the current-carrying capacity of each cable shall be per the latest version of the National Electric Code, or the code of the local agency or authority having jurisdiction.

Contractor shall make no connections or splices of any kind in cables installed in conduits or duct banks.

Unless otherwise designated in the plans, where ducts are in tiers, use the lowest ducts to receive the cable first, with spare ducts left in the upper levels. Check duct routes prior to construction to obtain assurance that the shortest routes are selected ,and that any potential interference is avoided.

Duct banks or conduits shall be installed as a separate item per Item L-110, Airport Underground Electrical Duct Banks and Conduit. Contractor shall run a mandrel through duct banks or conduit prior to installation of cable to ensure that the duct bank or conduit is open, continuous, and clear of debris. The mandrel size shall be compatible with the conduit size. Contractor shall swab out all conduits/ducts and

clean light bases, manholes, etc., interiors immediately prior to pulling cable. Once cleaned and swabbed, the light bases and all accessible points of entry to the duct/conduit system shall be kept closed except when installing cables. Cleaning of ducts, light bases, manholes, etc., is incidental to the pay item of the item being cleaned. All raceway systems left open, after initial cleaning, for any reason shall be recleaned at Contractor's expense. Contractor shall verify existing ducts proposed for use in this project as clear and open. Contractor shall notify Engineer of any blockage in the existing ducts.

The cable shall be installed in a manner that prevents harmful stretching of the conductor, damage to the insulation, or damage to the outer protective covering. The ends of all cables shall be sealed with moisture-seal tape providing moisture-tight mechanical protection with minimum bulk, or alternately, heat shrinkable tubing before pulling into the conduit and it shall be left sealed until connections are made. Where more than one cable is to be installed in a conduit, all cable shall be pulled in the conduit at the same time. The pulling of a cable through duct banks or conduits may be accomplished by hand winch or power winch with the use of cable grips or pulling eyes. Maximum pulling tensions shall not exceed the cable manufacturer's recommendations. A non-hardening cable-pulling lubricant recommended for the type of cable being installed shall be used where required.

Contractor shall submit the recommended pulling tension values to Engineer prior to any cable installation. If required by Engineer, pulling tension values for cable pulls shall be monitored by a dynamometer in the presence of Engineer. Cable pull tensions shall be recorded by Contractor and reviewed by Engineer. Cables exceeding the maximum allowable pulling tension values shall be removed and replaced by Contractor at Contractor's expense.

The manufacturer's minimum bend radius or NEC requirements (whichever is more restrictive) shall apply. Cable installation, handling and storage shall be per manufacturer's recommendations. During cold weather, particular attention shall be paid to the manufacturer's minimum installation temperature. Cable shall not be installed when the temperature is at or below the manufacturer's minimum installation temperature. At Contractor's option, Contractor may submit a plan, for review by Engineer, for heated storage of the cable and maintenance of an acceptable cable temperature during installation when temperatures are below the manufacturer's minimum cable installation temperature.

Cable shall not be dragged across base can or manhole edges, pavement, or earth. When cable must be coiled, lay cable out on a canvas tarp or use other appropriate means to prevent abrasion to the cable jacket.

108-3.3 Installation of direct-buried cable in trenches. Not used.

a. Trenching. Where turf is well established and the sod can be removed, it shall be carefully stripped and properly stored. Trenches for cables may be excavated manually or with mechanical trenching equipment. Walls of trenches shall be essentially vertical so that a minimum of surface is disturbed. Graders shall not be used to excavate the trench with their blades. The bottom surface of trenches shall be essentially smooth and free from coarse aggregate. Unless otherwise specified, cable trenches shall be excavated to a minimum depth of 18 inches below finished grade per NEC Table 300.5, except as follows:

- When off the airport or crossing under a roadway or driveway, minimum depth shall be 36 inches unless otherwise specified.
- Minimum cable depth when crossing under a railroad track, shall be 42 inches unless otherwise specified.

Contractor shall excavate all cable trenches to a width not less than 6 inches. Unless otherwise specified on the plans, all cables in the same location and running in the same general direction shall be installed in the same trench.

When rock is encountered, the rock shall be removed to a depth of at least 3 inches below the required cable depth and it shall be replaced with bedding material of earth or sand containing no mineral aggregate particles that would be retained on a 1/4-inch sieve. Flowable backfill material may alternatively be used.

Duct bank or conduit markers temporarily removed for trench excavations shall be replaced as required.

It is Contractor's responsibility to locate existing utilities within the work area prior to excavation. Where existing active cables cross proposed installations, Contractor shall ensure that these cables are adequately protected. Where crossings are unavoidable, no splices will be allowed in the existing cables, except as specified on the plans. Installation of new cable where such crossings must occur shall proceed as follows:

(1) Existing cables shall be located manually. Unearthed cables shall be inspected to assure absolutely no damage has occurred.

(2) Trenching, etc., in cable areas shall then proceed, with approval of Engineer, with care taken to minimize possible damage or disruption of existing cable, including careful backfilling in area of cable.

If any previously identified cable is damaged during construction, Contractor shall be responsible for the complete repair or replacement.

b. Backfilling. After the cable has been installed, the trench shall be backfilled. The first layer of backfill in the trench shall encompass all cables; be 3 inches deep, loose measurement; and shall be either earth or sand containing no mineral aggregate particles that would be retained on a 1/4-inch sieve. This layer shall not be compacted. The second layer shall be 5 inches deep, loose measurement, and shall contain no particles that would be retained on a 1-inch sieve. The remaining third and subsequent layers of backfill shall not exceed 8 inches of loose measurement and be excavated or imported material and shall not contain stone or aggregate larger than 4 inches maximum diameter.

The second and subsequent layers shall be thoroughly tamped and compacted to at least the density of the adjacent material. If the cable is to be installed in locations or areas where other compaction requirements are specified (under pavements, embankments, etc.) the backfill compaction shall be to a minimum of 100 percent of ASTM D1557.

Trenches shall not contain pools of water during backfilling operations. The trench shall be completely backfilled and tamped level with the adjacent surface, except that when turf is to be established over the trench, the backfilling shall be stopped at an appropriate depth consistent with the type of turfing operation to be accommodated. A proper allowance for settlement shall also be provided. Any excess excavated material shall be removed and disposed of per the plans and specifications.

Underground electrical warning (caution) tape shall be installed in the trench above all direct-buried cable. Contractor shall submit a sample of the proposed warning tape for acceptance by Engineer. If not shown on the plans, the warning tape shall be located 6 inches above the direct-buried cable or the counterpoise wire if present. A 3- to 6-inch-wide polyethylene film detectable tape, with a metalized foil core, shall be installed above all direct buried cable or counterpoise. The tape shall be of the color and have a continuous legend as indicated on the plans. The tape shall be installed 8 inches minimum below finished grade.

c. Restoration. Following restoration of all trenching near airport movement surfaces, Contractor shall visually inspect the area for foreign object debris (FOD) and remove any that is found. Where soil and sod has been removed, it shall be replaced as soon as possible after the backfilling is completed. All areas disturbed by work shall be restored to its original condition. The restoration shall include existing material removed or excavated as shown on the plans. Contractor shall be held responsible for maintaining all disturbed surfaces and replacements until final acceptance. When trenching is through

paved areas, restoration shall be equal to existing conditions. If the cable is to be installed in locations or areas where other compaction requirements are specified (under pavements, embankments, etc.) the backfill compaction shall be to a minimum of 100% of ASTM D1557. Restoration shall be considered incidental to the pay item of which it is a component part.

108-3.4 Cable markers for direct-buried cable. Not used.

108-3.5 Splicing. Connections of the type shown on the plans shall be made by experienced personnel regularly engaged in this type of work and shall be made as follows:

a. Cast splices. These shall be made by using crimp connectors for jointing conductors. Molds shall be assembled, and the compound shall be mixed and poured per the manufacturer's instructions and to the satisfaction of Engineer.

b. Field-attached plug-in splices. These shall be assembled per the manufacturer's instructions. These splices shall be made by plugging directly into mating connectors. The joint where the connectors come together shall be finished by one of the following methods: (1) wrapped with at least one layer of rubber or synthetic rubber tape and one layer of plastic tape, one-half lapped, extending at least 1 1/2 inches on each side of the joint; (2) covered with heat shrinkable tubing with integral sealant extending at least 1-1/2 inches on each side of the joint; or (3) on connector kits equipped with water seal flap; roll-over water seal flap to sealing position on mating connector.

c. Factory-molded plug-in splices. These shall be made by plugging directly into mating connectors. The joint where the connectors come together shall be finished by one of the following methods: (1) wrapped with at least one layer of rubber or synthetic rubber tape and one layer of plastic tape, half lapped, extending at least 1-1/2 inches on each side of the joint; (2) covered with heat shrinkable tubing with integral sealant extending at least 1-1/2 inches on each side of the joint; or (3) on connector kits so equipped with water seal flap; roll-over water seal flap to sealing position on mating connector.

108-3.6 Bare counterpoise wire installation for lightning protection and grounding. If shown on the plans or included in the job specifications, bare solid #6 AWG copper counterpoise wire shall be installed for lightning protection of the underground cables. Engineer shall select one of two methods of lightning protection for the airfield lighting circuit based upon sound engineering practice and lightning strike density.

a. Equipotential. May be used by Engineer for areas that have high rates of lightning strikes. The counterpoise size is determined by Engineer. The equipotential method is applicable to all airfield lighting systems (i.e. runway, taxiway, apron – touchdown zone, centerline, edge, threshold and approach lighting systems). The equipotential method is also successfully applied to provide lightning protection for power, signal, and communication systems. The light bases, counterpoise, etc (all components) are bonded together and bonded to the vault power system ground loop/electrode.

Counterpoise wire shall be installed in the same trench for the entire length of buried cable, conduits and duct banks that are installed to contain airfield cables. The counterpoise is centered over the cable/conduit/duct to be protected.

The counterpoise conductor shall be installed no less than 8 inches minimum or 12 inches maximum above the raceway or cable to be protected, except as permitted below:

(1) The minimum counterpoise conductor height above the raceway or cable to be protected shall be permitted to be adjusted subject to coordination with the airfield lighting and pavement designs.

(2) The counterpoise conductor height above the protected raceway(s) or cable(s) shall be calculated to ensure that the raceway or cable is within a 45-degree area of protection, (45 degrees on each side of vertical creating a 90-degree angle).

The counterpoise conductor shall be bonded to each metallic light base, mounting stake, and metallic airfield lighting component.

All metallic airfield lighting components in the field circuit on the output side of the constant current regulator (CCR) or other power source shall be bonded to the airfield lighting counterpoise system.

All components rise and fall at the same potential with no potential difference, no damaging arcing and no damaging current flow.

See AC 150/5340-30, Design and Installation Details for Airport Visual Aids and NFPA 780, Standard for the Installation of Lightning Protection Systems, Chapter 11, for a detailed description of the Equipotential Method of lightning protection.

Reference FAA STD-019E, Lightning and Surge Protection, Grounding Bonding and Shielding Requirements for Facilities and Electronic Equipment, Part 4.1.1.7.

b. Common Installation requirements. When a metallic light base is used, the grounding electrode shall be bonded to the metallic light base or mounting stake with a No. 6 AWG bare, annealed or soft drawn, solid copper conductor.

Grounding electrodes may be rods, ground dissipation plates, radials, or other electrodes listed in the NFPA 70 (NEC) or NFPA 780.

Where raceway is installed by the directional bore, jack and bore, or other drilling method, the counterpoise conductor shall be permitted to be installed concurrently with the directional bore, jack and bore, or other drilling method raceway, external to the raceway or sleeve.

The counterpoise wire shall also be exothermically welded to ground rods installed as shown on the plans but not more than 500 feet apart around the entire circuit. The counterpoise system shall be continuous and terminate at the transformer vault or at the power source. It shall be securely attached to the vault or equipment external ground ring or other made electrode-grounding system. The connections shall be made as shown on the plans and in the specifications.

Where an existing airfield lighting system is being extended or modified, the new counterpoise conductors shall be interconnected to existing counterpoise conductors at each intersection of the new and existing airfield lighting counterpoise systems.

108-3.7 Counterpoise installation above multiple conduits and duct banks. Counterpoise wires shall be installed above multiple conduits/duct banks for airfield lighting cables, with the intent being to provide a complete area of protection over the airfield lighting cables. When multiple conduits and/or duct banks for airfield cable are installed in the same trench, the number and location of counterpoise wires above the conduits shall be adequate to provide a complete area of protection measured 45 degrees each side of vertical.

Where duct banks pass under pavement to be constructed in the project, the counterpoise shall be placed above the duct bank. Reference details on the construction plans.

108-3.8 Counterpoise installation at existing duct banks. When airfield lighting cables are indicated on the plans to be routed through existing duct banks, the new counterpoise wiring shall be terminated at ground rods at each end of the existing duct bank where the cables being protected enter and exit the duct bank. The new counterpoise conductor shall be bonded to the existing counterpoise system.

108-3.9 Exothermic bonding. Bonding of counterpoise wire shall be by the exothermic welding process or equivalent method accepted by Engineer. Only personnel experienced in and regularly engaged in this type of work shall make these connections.

Contractor shall demonstrate to the satisfaction of Engineer, the welding kits, materials and procedures to be used for welded connections prior to any installations in the field. The installations shall comply with the manufacturer's recommendations and the following:

a. All slag shall be removed from welds.

b. Using an exothermic weld to bond the counterpoise to a lug on a galvanized light base is not recommended unless the base has been specially modified. Consult the manufacturer's installation directions for proper methods of bonding copper wire to the light base. See AC 150/5340-30 for galvanized light base exception.

c. If called for in the plans, all buried copper and weld material at weld connections shall be thoroughly coated with 6 mm of 3M™ Scotchkote™, or approved equivalent, or coated with coal tar Bitumastic® material to prevent surface exposure to corrosive soil or moisture.

108-3.10 Testing. Contractor shall furnish all necessary equipment and appliances for testing the airport electrical systems and underground cable circuits before and after installation. Contractor shall perform all tests in the presence of Engineer. Contractor shall demonstrate the electrical characteristics to the satisfaction of Engineer. All costs for testing are incidental to the respective item being tested. For phased projects, the tests must be completed by phase. Contractor must maintain the test results throughout the entire project as well as during the warranty period that meet the following:

a. Should the counterpoise or ground grid conductors be damaged or suspected of being damaged by construction activities Contractor shall test the conductors for continuity with a low resistance ohmmeter. The conductors shall be isolated such that no parallel path exists and tested for continuity. Engineer shall approve of the test method selected. All such testing shall be at the sole expense of Contractor.

After installation, Contractor shall test and demonstrate to the satisfaction of Engineer the following:

b. That all affected lighting power and control circuits (existing and new) are continuous and free from short circuits.

c. That all affected circuits (existing and new) are free from unspecified grounds.

d. That the insulation resistance to ground of all new non-grounded high voltage series circuits or cable segments is not less than 500 megohms at 1000 VDC. Verify continuity of all series airfield lighting circuits prior to energization.

e. That the insulation resistance to ground of all new non-grounded conductors of new multiple circuits or circuit segments is not less than 100 megohms.

f. That all affected circuits (existing and new) are properly connected per applicable wiring diagrams.

g. That all affected circuits (existing and new) are operable. Tests shall be conducted that include operating each control not less than 10 times and the continuous operation of each lighting and power circuit for not less than 1/2 hour.

Two copies of tabulated results of all cable tests performed shall be supplied by Contractor to Engineer. Where connecting new cable to existing cable, insulation resistance tests shall be performed on the new cable prior to connection to the existing circuit.

There are no approved "repair" procedures for items that have failed testing other than complete replacement.

METHOD OF MEASUREMENT

108-4.1 Trenching shall be measured by the linear feet of trench, including the excavation, backfill, and restoration, completed, measured as excavated, and accepted as satisfactory. When specified, separate measurement shall be made for trenches of various specified widths. The cost of all excavation, backfill, dewatering and restoration regardless of the type of material encountered shall be included in the unit price bid for the work.

108-4.2 Cable or counterpoise wire installed in trench, duct bank or conduit shall be measured by the number of linear feet installed and grounding connectors, and trench marking tape ready for operation, and accepted as satisfactory. Separate measurement shall be made for each cable or counterpoise wire installed in trench, duct bank or conduit. The measurement for this item shall include additional quantities required for slack.

108-4.3 No separate payment will be made for ground rods**.**

BASIS OF PAYMENT

108-5.1 Payment will be made at the contract unit price for trenching, cable and bare counterpoise wire installed in trench (direct buried), or cable and equipment ground installed in duct bank or conduit, in place by Contractor and accepted by Engineer. This price shall be full compensation for furnishing all materials and for all preparation and installation of these materials, and for all labor, equipment, tools, and incidentals, including ground rods and ground connectors and trench marking tape, necessary to complete this item.

Payment will be made under:

Item L-108-5.1	Trenching, Backfill, and Compact for PVC Conduit, 24-inch minimum depth, per linear foot
Item L-108-5.2	Trenching, Backfill, and Compact for PVC Conduit, 40-inch minimum depth, per linear foot
Item L-108-5.3	No. 8 AWG, 5kV, L-824, Type C Cable, Installed in Trench, Duct Bank or Conduit, per liner foot
Item L-108-5.4	No. 6 AWG, Solid, Bare Copper Ground Wire, Installed, Above the Duct Bank or Conduit, Including Connections/Terminations, per linear foot
Item L-108-5.5	No. 6 AWG, Insulated, Stranded Equipment bonding, Installed in Duct Bank or Conduit, per linear foot

REFERENCES

The publications listed below form a part of this specification to the extent referenced. The publications are referred to within the text by the basic designation only.

Advisory Circulars (AC)

AC 150/5340-26	Maintenance of Airport Visual Aid Facilities
AC 150/5340-30	Design and Installation Details for Airport Visual Aids
AC 150/5345-7	Specification for L-824 Underground Electrical Cable for Airport Lighting Circuits
AC 150/5345-26	Specification for L-823 Plug and Receptacle, Cable Connectors

AC 150/5345-53	Airport Lighting Equipment Certification Program

Commercial Item Description

A-A-59544A	Cable and Wire, Electrical (Power, Fixed Installation)
A-A-55809	Insulation Tape, Electrical, Pressure-Sensitive Adhesive, Plastic

ASTM International (ASTM)

ASTM B3	Standard Specification for Soft or Annealed Copper Wire
ASTM B8	Standard Specification for Concentric-Lay-Stranded Copper Conductors, Hard, Medium-Hard, or Soft
ASTM B33	Standard Specification for Tin-Coated Soft or Annealed Copper Wire for Electrical Purposes
ASTM D4388	Standard Specification for Nonmetallic Semi-Conducting and Electrically Insulating Rubber Tapes

Mil Spec

MIL-PRF-23586F	Performance Specification: Sealing Compound (with Accelerator), Silicone Rubber, Electrical
MIL-I-24391	Insulation Tape, Electrical, Plastic, Pressure Sensitive

National Fire Protection Association (NFPA)

NFPA-70	National Electrical Code (NEC)
NFPA-780	Standard for the Installation of Lightning Protection Systems

American National Standards Institute (ANSI)/Institute of Electrical and Electronics Engineers (IEEE)

Federal Aviation Administration Standard

FAA STD-019E	Lightning and Surge Protection, Grounding Bonding and Shielding Requirements for Facilities and Electronic Equipment

END OF ITEM L-108

Item L-110 Airport Underground Electrical Duct Banks and Conduits

DESCRIPTION

110-1.1 This item shall consist of underground electrical conduits and duct banks (single or multiple conduits encased in concrete or buried in sand) installed per this specification at the locations and per the dimensions, designs, and details shown on the plans. This item shall include furnishing and installing of all underground electrical duct banks and individual and multiple underground conduits and removal of existing duct banks. It shall also include all turfing trenching, backfilling, removal, and restoration of any paved or turfed areas; concrete encasement, mandrelling, pulling lines, duct markers, plugging of conduits, and the testing of the installation as a completed system ready for installation of cables per the plans and specifications. This item shall also include furnishing and installing conduits and all incidentals for providing positive drainage of the system. Verification of existing ducts is incidental to the pay items provided in this specification.

EQUIPMENT AND MATERIALS

110-2.1 General.

a. All equipment and materials covered by referenced specifications shall be subject to acceptance through manufacturer's certification of compliance with the applicable specification when requested by Engineer.

b. Manufacturer's certifications shall not relieve Contractor of the responsibility to provide materials per these specifications and acceptable to Engineer. Materials supplied and/or installed that do not comply with these specifications shall be removed, when directed by Engineer and replaced with materials, that comply with these specifications, at Contractor's cost.

c. All materials and equipment used to construct this item shall be submitted to Engineer for approval prior to ordering the equipment. Submittals consisting of marked catalog sheets or shop drawings shall be provided. Submittal data shall be presented in a clear, precise, and thorough manner. Original catalog sheets are preferred. Photocopies are acceptable provided they are as good a quality as the original. Clearly and boldly mark each copy to identify products or models applicable to this project. Indicate all optional equipment and delete non-pertinent data. Submittals for components of electrical equipment and systems shall identify the equipment for which they apply on each submittal sheet. Markings shall be made bold and clear with arrows or circles (highlighting is not acceptable). Contractor is solely responsible for delays in project that accrue directly or indirectly from late submissions or resubmissions of submittals.

d. The data submitted shall be sufficient, in the opinion of Engineer, to determine compliance with the plans and specifications. Contractor's submittals shall be electronically submitted in pdf format, tabbed by specification section. Engineer reserves the right to reject any equipment, materials or procedures that do not meet the system design and the standards and codes specified in this document.

e. All equipment and materials furnished and installed under this section shall be guaranteed against defects in materials and workmanship for a period of at least 12 months from final acceptance by Owner. The defective materials and/or equipment shall be repaired or replaced, at Owner's discretion, with no additional cost to Owner.

110-2.2 Steel conduit. Rigid galvanized steel (RGS) conduit and fittings shall be hot dipped galvanized inside and out and conform to the requirements of Underwriters Laboratories Standards 6, 514B, and 1242. All RGS conduits or RGS elbows installed below grade, in concrete, permanently wet locations or other similar environments shall be painted with a 10-mil thick coat of asphaltum sealer or shall have a factory-bonded polyvinyl chloride (PVC) cover. Any exposed galvanizing or steel shall be coated with 10 mils of asphaltum sealer. When using PVC coated RGS conduit, care shall be exercised not to damage the factory PVC coating. Damaged PVC coating shall be repaired per the manufacturer's written instructions. In lieu of PVC coated RGS, corrosion wrap tape shall be permitted to be used where RGS is in contact with direct earth."

110-2.3 Plastic conduit. Plastic conduit and fittings-shall conform to the following requirements:

- UL 514B covers W-C-1094-Conduit fittings all types, classes 1 thru 3 and 6 thru 10.
- UL 514C covers W-C-1094- all types, Class 5 junction box and cover in plastic (PVC).
- UL 651 covers W-C-1094-Rigid PVC Conduit, types I and II, Class 4.
- UL 651A covers W-C-1094-Rigid PVC Conduit and high-density polyethylene (HDPE) Conduit type III and Class 4.

UL Standards UL-651 and Article 352 of the current National Electrical Code shall be one of the following, as shown on the plans:

a. Type I – Schedule 40 and Schedule 80 PVC suitable for underground use either direct-buried or encased in concrete.

b. Type II – Schedule 40 PVC suitable for either above ground or underground use.

c. Type III – Schedule 80 PVC suitable for either above ground or underground use either direct-buried or encased in concrete.

d. Type III – HDPE pipe, minimum standard dimensional ratio (SDR) 11, suitable for placement with directional boring under pavement.

The type of solvent cement shall be as recommended by the conduit/fitting manufacturer.

110-2.4 Split conduit. Split conduit shall be pre-manufactured for the intended purpose and shall be made of steel or plastic.

110-2.5 Conduit spacers. Conduit spacers shall be prefabricated interlocking units manufactured for the intended purpose. They shall be of double wall construction made of high-grade, high-density polyethylene complete with interlocking cap and base pads. They shall be designed to accept No. 4 reinforcing bars installed vertically.

110-2.6 Concrete. Concrete shall be proportioned, placed, and cured per Item P-610, Concrete for Miscellaneous Structures.

110-2.7 Precast concrete structures. Precast concrete structures shall be furnished by a plant meeting National Precast Concrete Association Plant Certification Program or another Engineer approved third party certification program. Precast concrete structures shall conform to ASTM C478.

110-2.8 Flowable backfill. Flowable material used to back fill conduit and duct bank trenches shall conform to the requirements of Item P-153, Controlled Low Strength Material.

110-2.9 Detectable warning tape. Plastic, detectable, American Public Works Association (APWA) red (electrical power lines, cables, conduit, and lighting cable), orange (phone/fiber optic cabling) with continuous legend magnetic tape shall be polyethylene film with a metallized foil core and shall be 3-6 inches wide. Detectable tape is incidental to the respective bid item.

Color and legend: Red and ELECTRIC.

CONSTRUCTION METHODS

110-3.1 General. Contractor shall install underground duct banks and conduits at the approximate locations indicated on the plans. Engineer shall indicate specific locations as the work progresses, if required to differ from the plans. Duct banks and conduits shall be of the size, material, and type indicated on the plans or specifications. Where no size is indicated on the plans or in the specifications, conduits shall be not less than 2 inches inside diameter or comply with the National Electrical Code based on cable to be installed, whichever is larger. All duct bank and conduit lines shall be laid to grade toward access points and duct or conduit ends for drainage. Unless shown otherwise on the plans, grades shall be at least 3 inches per 100 feet. On runs where it is not practicable to maintain the grade all one way, the duct bank and conduit lines shall be graded from the center in both directions toward access points or conduit ends, with a drain into the storm drainage system. Pockets or traps where moisture may accumulate shall be avoided. Under pavement, the top of the duct bank shall not be less than 18 inches below the subgrade; in other locations, the top of the duct bank or underground conduit shall be not less than 18 inches below finished grade.

Contractor shall mandrel each individual conduit whether the conduit is direct-buried or part of a duct bank. An iron-shod mandrel, not more than 1/4 inch smaller than the bore of the conduit shall be pulled or pushed through each conduit. The mandrel shall have a leather or rubber gasket slightly larger than the conduit hole.

Contractor shall swab out all conduits/ducts and clean base can, manhole, pull boxes, etc., interiors immediately prior to pulling cable. Once cleaned and swabbed the light bases, manholes, pull boxes, etc., and all accessible points of entry to the duct/conduit system shall be kept closed except when installing cables. Cleaning of ducts, base cans, manholes, etc., is incidental to the pay item of the item being cleaned. All raceway systems left open, after initial cleaning, for any reason shall be recleaned at Contractor’s expense. All accessible points shall be kept closed when not installing cable. Contractor shall verify existing ducts proposed for use in this project as clear and open. Contractor shall notify Engineer of any blockage in the existing ducts.

For pulling the permanent wiring, each individual conduit, whether the conduit is direct-buried or part of a duct bank, shall be provided with a 200-pound test polypropylene pull rope. Ends shall be secured with sufficient length shall be left in access points to prevent it from slipping back into the conduit. Where spare conduits are installed, as indicated on the plans, the open ends shall be plugged with removable tapered plugs, designed for this purpose.

All conduits shall be securely fastened in place during construction and shall be plugged to prevent contaminants from entering the conduits. Any conduit section having a defective joint shall not be installed. Ducts shall be supported and spaced apart using approved spacers at intervals not to exceed 5 feet.

Unless otherwise shown on the plans, concrete encased duct banks shall be used when crossing under pavements expected to carry aircraft loads, such as runways, taxiways, taxilanes, ramps and aprons. When under paved shoulders and other paved areas, conduit and duct banks shall be encased using flowable fill for protection.

All conduits within concrete encasement of the duct banks shall terminate with female ends for ease in current and future use. Install factory plugs in all unused ends. Do not cover the ends or plugs with concrete.

Where turf is well established and the sod can be removed, it shall be carefully stripped and properly stored.

Trenches for conduits and duct banks may be excavated manually or with mechanical trenching equipment unless in pavement, in which case they shall be excavated with mechanical trenching equipment. Walls of trenches shall be essentially vertical so that a minimum of shoulder surface is disturbed. Blades of graders shall not be used to excavate the trench.

When rock is encountered, the rock shall be removed to a depth of at least 3 inches below the required conduit or duct bank depth and it shall be replaced with bedding material of earth or sand containing no mineral aggregate particles that would be retained on a 1/4-inch sieve. Flowable backfill may alternatively be used

Underground electrical warning (CAUTION) tape shall be installed in the trench above all underground duct banks and conduits in unpaved areas. Contractor shall submit a sample of the proposed warning tape for approval by Engineer. If not shown on the plans, the warning tape shall be located 6 inches above the duct/conduit or the counterpoise wire if present.

Joints in plastic conduit shall be prepared per manufacturer recommendations for the type of conduit. Plastic conduit shall be prepared by application of a plastic cleaner and brushing a plastic solvent on the outside of the conduit ends and on the inside of the couplings. The conduit fitting shall then be slipped together with a quick one-quarter turn twist to set the joint tightly. Where more than one conduit is placed in a single trench, or in duct banks, joints in the conduit shall be staggered a minimum of 2 feet.

Changes in direction of runs exceeding 10 degrees, either vertical or horizontal, shall be accomplished using manufactured sweep bends.

Whether or not specifically indicated on the drawings, where the soil encountered at established duct bank grade is an unsuitable material, as determined by Engineer, the unsuitable material shall be removed per Item P-152 and replaced with suitable material. Additional duct bank supports shall be installed, as approved by Engineer.

All excavation shall be unclassified and shall be considered incidental to Item L-110. Dewatering necessary for duct installation, and erosion per federal, state, and local requirements is incidental to Item L-110.

Unless otherwise specified, excavated materials that are deemed by Engineer to be unsuitable for use in backfill or embankments shall be removed and disposed of offsite.

Any excess excavation shall be filled with suitable material approved by Engineer and compacted per Item P-152.

It is Contractor’s responsibility to locate existing utilities within the work area prior to excavation. Where existing active cables) cross proposed installations, Contractor shall ensure that these cables are adequately protected. Where crossings are unavoidable, no splices will be allowed in the existing cables, except as specified on the plans. Installation of new cable where such crossings must occur shall proceed as follows:

a. Existing cables shall be located manually. Unearthed cables shall be inspected to assure absolutely no damage has occurred

b. Trenching, etc., in cable areas shall then proceed with approval of Engineer, with care taken to minimize possible damage or disruption of existing cable, including careful backfilling in area of cable.

If any previously identified cable is damaged during construction, Contractor shall be responsible for the complete repair.

110-3.2 Duct banks. Unless otherwise shown in the plans, new duct banks shall be installed so top of the concrete envelope is not less than 18 inches below the bottom of the base or stabilized base course layers where installed under runways, taxiways, aprons, or other paved areas, and not less than 18 inches below finished grade where installed in unpaved areas.

Unless otherwise shown on the plans, duct banks under paved areas shall extend at least 3 feet beyond the edges of the pavement or 3 feet beyond any under drains that may be installed alongside the paved area. Trenches for duct banks shall be opened the complete length before concrete is placed so that if any obstructions are encountered, provisions can be made to avoid them. Unless otherwise shown on the plans, all duct banks shall be placed on a layer of concrete not less than 3 inches thick prior to its initial set. Contractor shall space the conduits not less than 3 inches apart (measured from outside wall to outside wall). All such multiple conduits shall be placed using conduit spacers applicable to the type of conduit. As the conduit laying progresses, concrete shall be placed around and on top of the conduits not less than 3 inches thick unless otherwise shown on the plans. All conduits shall terminate with female ends for ease of access in current and future use. Install factory plugs in all unused ends. Do not cover the ends or plugs with concrete.

Conduits forming the duct bank shall be installed using conduit spacers. No. 4 reinforcing bars shall be driven vertically into the soil a minimum of 6 inches to anchor the assembly into the earth prior to placing the concrete encasement. For this purpose, the spacers shall be fastened down with locking collars attached to the vertical bars. Spacers shall be installed at 5-foot intervals. Spacers shall be in the proper sizes and configurations to fit the conduits. Locking collars and spacers shall be submitted to Engineer for review prior to use.

When specified, Contractor shall reinforce the bottom side and top of encasements with steel reinforcing mesh or fabric or other approved metal reinforcement. When directed, Contractor shall supply additional supports where the ground is soft and boggy, where ducts cross under roadways, or where shown on the plans. Under such conditions, the complete duct structure shall be supported on reinforced concrete footings, piers, or piles located at approximately 5-foot intervals.

All pavement surfaces that are to have ducts installed therein shall be neatly saw cut to form a vertical face. All excavation shall be included in the contract with price for the duct.

Install a plastic, detectable, color as noted, 3- to 6-inch-wide tape, 8 inches minimum below grade above all underground conduit or duct lines not installed under pavement. Utilize the 3-inch-wide tape only for single conduit runs. Utilize the 6-inch-wide tape for multiple conduits and duct banks. For duct banks equal to or greater than 24 inches in width, utilize more than one tape for sufficient coverage and identification of the duct bank as required.

When existing cables are to be placed in split duct, encased in concrete, the cable shall be carefully located and exposed by hand tools. Prior to being placed in duct, Engineer shall be notified so that he may inspect the cable and determine that it is in good condition. Where required, split duct shall be installed as shown on the drawings or as required byEngineer**110-3.3 Conduits without concrete encasement**. Trenches for single-conduit lines shall be not less than 6 inches nor more than 12 inches wide. The trench for 2 or more conduits installed at the same level shall be proportionately wider. Trench bottoms for conduits without concrete encasement shall be made to conform accurately to grade to provide uniform support for the conduit along its entire length.

Unless otherwise shown on the plans, a layer of fine earth material, at least 4 inches thick (loose measurement) shall be placed in the bottom of the trench as bedding for the conduit. The bedding material shall consist of soft dirt, sand, or other fine fill, and it shall contain no particles that would be retained on a 1/4-inch sieve. The bedding material shall be tamped until firm. Flowable backfill may alternatively be used.

Unless otherwise shown on plans, conduits shall be installed so that the tops of all conduits within the Airport’s secured area where trespassing is prohibited are at least 18 inches below the finished grade. Conduits outside the Airport’s secured area shall be installed so that the tops of the conduits are at least 24 inches below the finished grade per National Electric Code (NEC), Table 300.5.

When two or more individual conduits intended to carry conductors of equivalent voltage insulation rating are installed in the same trench without concrete encasement, space not less than 3 inches apart (measured from outside wall to outside wall) in a horizontal direction nor less than 6 inches apart in a vertical direction. Where two or more individual conduits intended to carry conductors of differing voltage insulation rating are installed in the same trench without concrete encasement, place not less than 3 inches apart (measured from outside wall to outside wall) in a horizontal direction nor less than 6 inches apart in a vertical direction.

Trenches shall be opened the complete length between normal termination points before conduit is installed so that if any unforeseen obstructions are encountered, proper provisions can be made to avoid them.

Conduits shall be installed using conduit spacers. No. 4 reinforcing bars shall be driven vertically into the soil a minimum of 6 inches to anchor the assembly into the earth while backfilling. For this purpose, the spacers shall be fastened down with locking collars attached to the vertical bars. Spacers shall be installed at 5-foot intervals. Spacers shall be in the proper sizes and configurations to fit the conduits. Locking collars and spacers shall be submitted to Engineer for review prior to use.

110-3.4 Markers. The location of each end and of each change of direction of conduits and duct banks shall be marked by a concrete slab marker 2 feet square and 4 - 6 inches thick extending approximately one inch above the surface. The markers shall also be located directly above the ends of all conduits or duct banks, except where they terminate in a junction/access structure or building. Each cable or duct run from a line of lights and signs to the equipment vault must be marked at approximately every 200 feet along the cable or duct run, with an additional marker at each change of direction of cable or duct run.

Contractor shall impress the word “DUCT” or “CONDUIT” on each marker slab. Impression of letters shall be done in a manner, approved by Engineer, for a neat, professional appearance. All letters and words must be neatly stenciled. After placement, all markers shall be given one coat of high-visibility orange paint, as approved by Engineer. Contractor shall also impress on the slab the number and size of conduits beneath the marker along with all other necessary information as determined by Engineer. The letters shall be 4 inches high and 3 inches wide with width of stroke 1/2 inch and 1/4 inch deep or as large as the available space permits. Furnishing and installation of duct markers is incidental to the respective duct pay item.

110-3.5 Backfilling for conduits. For conduits, 8 inches of sand, soft earth, or other fine fill (loose measurement) shall be placed around the conduits ducts and carefully tamped around and over them with hand tampers. The remaining trench shall then be backfilled and compacted per Item P-152 except that material used for back fill shall be select material not larger than 4 inches in diameter.

Flowable backfill may alternatively be used.

Trenches shall not contain pools of water during back filling operations.

The trench shall be completely backfilled and tamped level with the adjacent surface; except that, where sod is to be placed over the trench, the backfilling shall be stopped at a depth equal to the thickness of the sod to be used, with proper allowance for settlement.

Any excess excavated material shall be removed and disposed of per instructions issued by Engineer.

110-3.6 Backfilling for duct banks. After the concrete has cured, the remaining trench shall be backfilled and compacted per Item P-152 “Excavation and Embankment” except that the material used for backfill shall be select material not larger than 4 inches in diameter. In addition to the requirements of Item P-152, where duct banks are installed under pavement, one moisture/density test per lift shall be made for each 250 linear feet of duct bank or one work period’s construction, whichever is less.

Flowable backfill may alternatively be used.

Trenches shall not contain pools of water during backfilling operations. The trench shall be completely backfilled and tamped level with the adjacent surface; except that, where sod is to be placed over the trench, the backfilling shall be stopped at a depth equal to the thickness of the sod to be used, with proper allowance for settlement.

Any excess excavated material shall be removed and disposed of per instructions issued by

110-3.7 Restoration. Where sod has been removed, it shall be replaced as soon as possible after the backfilling is completed. All areas disturbed by the work shall be restored to its original condition. The restoration shall include topsoiling, fertilizing, and seeding shown on the plans. Contractor shall be held responsible for maintaining all disturbed surfaces and replacements until final acceptance. All restoration shall be considered incidental to the respective L-110 pay item. Following restoration of all trenching near airport movement surfaces, Contractor shall thoroughly visually inspect the area for foreign object debris (FOD) and remove any such FOD that is found. This FOD inspection and removal shall be considered incidental to the pay item of which it is a component part.

110-3.8 Ownership of removed cable. Contractor.

METHOD OF MEASUREMENT

110-4.1 Underground conduits and duct banks shall be measured by the linear feet of conduits and duct banks installed, including encasement, locator tape, trenching and backfill with designated material, and restoration, and for drain lines, the termination at the drainage structure, all measured in place, completed, and accepted. Separate measurement shall be made for the various types and sizes.

BASIS OF PAYMENT

110-5.1 Payment will be made at the contract unit price per linear foot for each type and size of conduit and duct bank completed and accepted, including trench and backfill with the designated material, and, for drain lines, the termination at the drainage structure. This price shall be full compensation for removal and disposal of existing duct banks and conduits as shown on the plans, furnishing all materials and for all preparation, assembly, and installation of these materials, and for all labor, equipment, tools, and incidentals necessary to complete this item per the provisions and intent of the plans and specifications.

Payment will be made under:

Item L-110-5.1	Non-Encased Electrical Conduit, 2-inch SCH 40, per linear foot
Item L-110-5.2	Concrete-Encased Electrical Conduit, two 4-inch SCH 40, including Duct Markers, per linear foot
Item L-110-5.3	Furnish and Install Concrete-Encased L867 Junction Box, per each

REFERENCES

The publications listed below form a part of this specification to the extent referenced. The publications are referred to within the text by the basic designation only.

Advisory Circular (AC)

AC 150/5340-30	Design and Installation Details for Airport Visual Aids
AC 150/5345-53	Airport Lighting Equipment Certification Program

ASTM International (ASTM)

ASTM A615	Standard Specification for Deformed and Plain Carbon-Steel Bars for Concrete Reinforcement

National Fire Protection Association (NFPA)

NFPA-70	National Electrical Code (NEC)

Underwriters Laboratories (UL)

UL Standard 6	Electrical Rigid Metal Conduit - Steel
UL Standard 514B	Conduit, Tubing, and Cable Fittings
UL Standard 514C	Nonmetallic Outlet Boxes, Flush-Device Boxes, and Covers
UL Standard 1242	Electrical Intermediate Metal Conduit Steel
UL Standard 651	Schedule 40, 80, Type EB and A Rigid PVC Conduit and Fittings
UL Standard 651A	Type EB and A Rigid PVC Conduit and HDPE Conduit

END OF ITEM L-110

Item L-125 Installation of Airport Lighting Systems

DESCRIPTION

125-1.1 This item shall consist of airport lighting systems furnished and installed in accordance with this specification, the referenced specifications, and the applicable advisory circulars (ACs). The systems shall be installed at the locations and in accordance with the dimensions, design, and details shown in the plans. This item shall include the furnishing of all equipment, materials, services, and incidentals necessary to place the systems in operation as completed units to the satisfaction of Engineer.

EQUIPMENT AND MATERIALS

125-2.1 General.

a. Airport lighting equipment and materials covered by Federal Aviation Administration (FAA) specifications shall be certified under the Airport Lighting Equipment Certification Program in accordance with AC 150/5345-53, current version. FAA certified airfield lighting shall be compatible with each other to perform in compliance with FAA criteria and the intended operation. If Contractor provides equipment that does not performs as intended because of incompatibility with the system, Contractor assumes all costs to correct the system for to operate properly.

b. Manufacturer's certifications shall not relieve Contractor of their responsibility to provide materials in accordance with these specifications and acceptable to Engineer. Materials supplied and/or installed that do not comply with these specifications shall be removed, when directed by Engineer and replaced with materials, which do comply with these specifications, at the sole cost of Contractor.

c. All materials and equipment used shall be submitted to Engineer for approval prior to ordering the equipment. Submittals consisting of marked catalog sheets or shop drawings shall be provided. Clearly mark each copy to identify pertinent products or models applicable to this project. Indicate all optional equipment and delete non-pertinent data. Submittals for components of electrical equipment and systems shall identify the equipment for which they apply on each submittal sheet. Markings shall be clearly made with arrows or circles (highlighting is not acceptable). Contractor shall be responsible for delays in the project accruing directly or indirectly from late submissions or resubmissions of submittals.

d. The data submitted shall be sufficient, in the opinion of Engineer, to determine compliance with the plans and specifications. Contractor's submittals shall be submitted in electronic PDF format, tabbed by specification section. Engineer reserves the right to reject any or all equipment, materials, or procedures, which, in Engineer opinion, does not meet the system design and the standards and codes, specified herein.

e. All equipment and materials furnished and installed under this section shall be guaranteed against defects in materials and workmanship for a period of at least 12 months from final acceptance by Owner. The defective materials and/or equipment shall be repaired or replaced, at Owner's discretion, with no additional cost to Owner.

EQUIPMENT AND MATERIALS

125-2.2 Conduit/Duct. Conduit shall conform to Specification Item L-110 Airport Underground Electrical Duct Banks and Conduits.

125-2.3 Cable and Counterpoise. Cable and Counterpoise shall conform to Item L-108 Underground Power Cable for Airports.

125-2.4 Tape. Rubber and plastic electrical tapes shall be Scotch Electrical Tape Numbers 23 and 88 respectively, as manufactured by 3M Company or an approved equal.

125-2.5 Cable Connections. Cable Connections shall conform to Item L-108 Installation of Underground Cable for Airports.

125-2.6 Retroreflective Markers. Not required.

125-2.7 Runway and Taxiway Lights. Runway and taxiway lights shall conform to the requirements of AC 150/5345-46. Lamps shall be of size and type indicated, or as required by fixture manufacturer for each lighting fixture required under this contract. Filters shall be of colors conforming to the specification for the light concerned or to the standard referenced.

Lights

Type	Class	Mode	Style	Option	Base	Filter	Transformer	Notes
TWY Edge L-861T	2	1	N/A	LED	L-867	Blue	L-830-16	14”

125-2.8 Runway and Taxiway Signs. Runway and Taxiway Guidance Signs should conform to the requirements of AC 150/5345-44.

Signs

Type	Size	Style	Class	Mode	Notes
L-858Y	2	2	1	2	LED
L-858L	2	2	1	2	LED

125-2.9 Runway End Identifier Light (REIL). Not required.

125-2.10 Precision Approach Path Indicator (PAPI). Not required.

125-2.11 Circuit Selector Cabinet. Not used.

125-2.12 Light Base and Transformer Housings. Light Base and Transformer Housings should conform to the requirements of AC 150/5345-42. Light bases shall be Type L-867, Class 1A, Size B shall be provided as indicated or as required to accommodate the fixture or device installed thereon. Base plates, cover plates, and adapter plates shall be provided to accommodate various sizes of fixtures.

125-2.13 Isolation Transformers. Isolation Transformers shall be Type L-830, size as required for each installation. Transformer shall conform to AC 150/5345-47.

INSTALLATION

125-3.1 Installation. Contractor shall furnish, install, connect, and test all equipment, accessories, conduit, cables, wires, buses, grounds and support items necessary to ensure a complete and operable airport lighting system as specified here and shown in the plans.

The equipment installation and mounting shall comply with the requirements of the National Electrical Code and state and local code agencies having jurisdiction.

Contractor shall install the specified equipment in accordance with the applicable advisory circulars and the details shown on the plans.

125-3.2 Testing. All lights shall be fully tested by continuous operation for not less than 24 hours as a completed system prior to acceptance. The test shall include operating the constant current regulator in each step not less than 10 times at the beginning and end of the 24-hour test. The fixtures shall illuminate properly during each portion of the test.

125-3.3 Shipping and Storage. Equipment shall be shipped in suitable packing material to prevent damage during shipping. Store and maintain equipment and materials in areas protected from weather and physical damage. Any equipment and materials, in the opinion of Engineer, damaged during construction or storage shall be replaced by Contractor at no additional cost to Owner. Painted or galvanized surfaces that are damaged shall be repaired in accordance with the manufacturer's recommendations.

125-3.4 Elevated and In-pavement Lights. Water, debris, and other foreign substances shall be removed prior to installing fixture base and light.

A jig or holding device shall be used when installing each light fixture to ensure positioning to the proper elevation, alignment, level control, and azimuth control. Light fixtures shall be oriented with the light beams parallel to the runway or taxiway centerline and facing in the required direction. Outermost edge of fixture shall be level with the surrounding pavement. Surplus sealant or flexible embedding material shall be removed. The holding device shall remain in place until sealant has reached its initial set.

METHOD OF MEASUREMENT

125-4.1 Reflective markers will be measured by the number installed as completed units in place, ready for operation, and accepted by Engineer. Runway and taxiway lights will be measured by the number of each type installed as completed units in place, ready for operation, and accepted by Engineer. Guidance signs will be measured by the number of each type and size installed as completed units, in place, ready for operation, and accepted by Engineer.

BASIS OF PAYMENT

125-5.1 Payment will be made at Contract unit price for each complete runway or taxiway light, guidance sign, or reflective marker runway end identification light installed by Contractor and accepted by Engineer. This payment will be full compensation for furnishing all materials, preparation, assembly, and installation of materials, and all labor, equipment, tools, and incidentals necessary to complete this item.

Payment will be made under:

Item 125-5.1	Remove and Dispose, Off Site, Existing Taxiway Guidance Signage (including all underground conduit, wiring connections, boxes, and concrete pads), complete, per each
Item 125-5.2	Item L-125-5.2, Remove and Save Five Existing Taxiway Edge Lights to Reuse; Remove and Dispose off site Existing underground conduit, wiring connections, boxes, concrete pads, and associated items, complete, per each
Item L-125-3	Three Module, Size 2, Style 2, Internally Lighted LED Guidance Sign, Base Mounted on Concrete-Encased Can, complete, per each
Item L-125-4	Item L-125-5.4, L-1861, LED Medium Intensity Taxiway Edge Light (Blue), Base Mounted on Concrete-Encased L-867 Light Base, Complete with Transformer and PVC Transformer Support (Quantity Includes Reuse of Five Edge Light Fixtures Salvaged in Line Item 32), complete, per each

REFERENCES

The publications listed below form a part of this specification to the extent referenced. The publications are referred to within the text by the basic designation only.

Advisory Circulars (AC)

AC 150/5340-18	Standards for Airport Sign Systems
AC 150/5340-26	Maintenance of Airport Visual Aid Facilities
AC 150/5340-30	Design and Installation Details for Airport Visual Aids
AC 150/5345-7	L-824 Underground Electrical Cable for Airport Lighting Circuits
AC 150/5345-26	L-823 Plug and Receptacle, Cable Connectors
AC 150/5345-28	Precision Approach Path Indicator (PAPI) Systems
AC 150/5345-39	L-853, Runway and Taxiway Retroreflective Markers
AC 150/5345-42	Airport Light Bases, Transformer Housings, Junction Boxes, Accessories
AC 150/5345-44	Runway and Taxiway Signs
AC 150/5345-46	Runway and Taxiway Light Fixtures
AC 150/5345-47	Series-to-Series Isolation Transformers for Airport Lighting Systems
AC 150/5345-51	Discharge-Type Flashing Light Equipment
AC 150/5345-53	Airport Lighting Equipment Certification Program

Engineering Brief (EB)

EB No. 67	Light Sources Other than Incandescent and Xenon for Airport and Obstruction Lighting Fixtures

END OF ITEM L-125

PARKHILL P140 TEMPORARY BARRICADES AND MARKING FOR PAVEMENT CLOSURE

DESCRIPTION

140-1.1 Work covered by this Section consists of furnishing all materials, equipment, labor, and performing all necessary operations to maintain a safe barricade system and personnel needed to flag/escort vehicles across active pavement on the Airport. Required project barricades, runway closure markings, lighting, etc. are detailed in the Project Plans. Contractor shall maintain barricades, runway closure markings, lights, etc. in good working order, and clean 24 hours per day throughout contract period.

METHOD OF MEASUREMENT

140-2.1 Measurement for this item will be by lump sum as Work progresses.

BASIS OF PAYMENT

140-3.1 All Work performed and materials furnished as prescribed in this item shall be measured and paid at contract lump sum price for "Temporary Barricades and Marking for Pavement Closure." Total lump sum shall be paid pro-rata per month and monthly amount calculated by dividing lump sum by contract time in months.

Payment will be made under:

Parkhill 140-3.1	Temporary Barricades and Marking for Pavement Closure, per lump sum.

END OF PARKHILL P140

APPENDIX A: GEOTECHNICAL INVESTIGATION

Rodriguez Engineering Laboratories LLC

February 15, 2023

Bijan Jamalabad, P.E.
Parkhill
11902 Burnet Rd, Suite 100
Austin, TX 78758

RE: Report of Geotechnical Investigation,
Midland International Air and Space Port
Midland, Texas

Dear Mr. Jamalabad,

We have completed the geotechnical investigation for the referenced project. This report describes the investigative procedures and presents the findings of our investigation.

We appreciate the opportunity of working with you on this phase of this project. If you have any questions regarding this report, or if we can be of further service to you, please do not hesitate to call.

Respectfully Submitted,



Jose Melendez, P.E.

13809 Turbine Drive, Austin, TX 78728
(512) 251-4454 Fax (512) 251-1380
E-mail: rodriguezlab@relcme.com
Registered Texas Engineering Firm F-1563

Rodriguez Engineering Laboratories

Construction Materials Engineering Testing

Geotechnical Investigation for Midland International Air and Space Port Midland, Texas

Submitted to:

Bijan Jamalabad, P.E.
Parkhill
11902 Burnet Rd, Suite 100
Austin, Texas 78758

February 15, 2023

13809 Turbine Dr.
Austin, TX 78728
Registered Texas Engineering Firm F-1563

Ph:(512) 251-4454
Fax: (512) 251-1380
E-mail: rodriguezlab@aol.com

Rodriguez Engineering Laboratories LLC

Geotechnical Investigation for Midland International Air and Space Port
Midland, Texas

Submitted to:

Bijan Jamalabad, P.E.
Parkhill
11902 Burnet Rd, Suite 100
Austin, TX 78728

Submitted by:

Rodriguez Engineering Laboratories
Registered Texas Engineering Firm F-1563
13809 Turbine Drive
Austin, Texas 78728

February 15, 2023

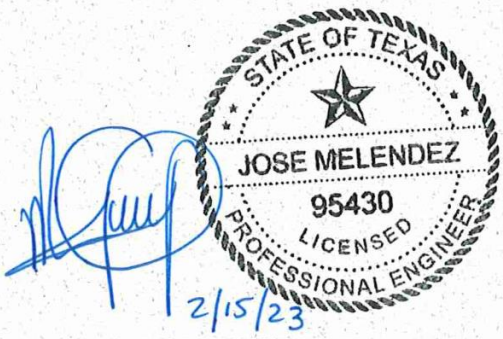

Jose Melendez, P.E.

R. Divya Sree 2/15/23

Divya S Reddy, E.I.T

Table of Contents

1. INTRODUCTION 2
2. PURPOSE OF STUDY 2
3. SUBSURFACE INVESTIGATION 2
4. LABORATORY TESTING 2
5. SITE AND SUBSURFACE CONDITIONS 4
5.1 Site Conditions 4
5.2 Subsurface Conditions 4
6. SUMMARY OF TEST RESULTS 4
6.1 Summary of Subgrade Materials Test Results 4
6.2 Laboratory CBR Value on Subgrade 5
6.3 Laboratory CBR Value on Existing Base/RAP (70/30) 5
6.4 Laboratory Results of Existing Base 6
6.5 Summary of Existing Pavement Structure 7
7. CONCLUSIONS AND RECOMMENDATIONS 8
7.1 General Pavement Recommendations 8
8. LIMITATIONS 10
9. APPENDIX 10
APPENDIX A: BORE LOG DATA
APPENDIX B: PROCTOR AND CBR DATA (SUBGRADE & BASE/RAP)
APPENDIX C: GEOLOGY MAP AND MAP OF BOREHOLE LOCATIONS
APPENDIX D: STABILIZATION ABILITY OF LIME BY PH METHOD
APPENDIX E: CORE PICTURES

Geotechnical Investigation for
Midland International Air & Space Port
Midland, Texas

1. INTRODUCTION

Rodriguez Engineering Laboratories was retained by Parkhill to perform a geotechnical investigation for the airfield pavement rehabilitation project at the Midland International Air & Space Port in Midland, Texas.

2. PURPOSE OF STUDY

The purpose of this investigation is to determine the engineering properties of the in-situ subsurface material for the proposed pavement reconstruction of Taxiway E, West of Taxiway A. The scope of work for the field geotechnical investigation includes excavating test pits, obtaining HMAC cores, drilling boreholes, and collecting representative soil and base samples to perform the appropriate laboratory tests. The objective of this report is to submit a summary of the laboratory test results obtained on this geotechnical investigation.

3. SUBSURFACE INVESTIGATION

The subsurface investigation was performed under the supervision of Jose Melendez, P.E. The field inspection, drilling, and logging were performed by Ricardo A. Avila, P.E. The drilling operations included excavating two (2) test pits, obtaining three (3) HMAC cores, and advancing one (1) boring to 10 feet and two (2) borings to 4 feet due to auger refusal. The approximate boring depths were initiated from existing pavement elevations at the specified locations approved by Parkhill. Upon completion, the borings and test pits were appropriately backfilled.

Appendix C contains a map of the borehole locations. Appendix A contains information on each borehole and test pit along with the laboratory test results for Moisture Content, Atterberg Limits, Sieve Analysis, and Unified Soil Classification. The borings were drilled with a Giddings trailer-mounted drill rig with a six (6) inch diameter flight auger at the selected locations.

4. LABORATORY TESTING

The soil samples obtained during the exploration were sealed at the site and transported to the laboratory. A testing program was conducted on the sealed samples to aid in the classification and evaluation of the engineering properties required for analysis. The laboratory tests were performed by experienced laboratory technicians and monitored by the geotechnical engineer. The parameters were determined by the following laboratory tests:

- Potential volumetric shrinkage characteristics of the cohesive soils were determined by the Standard Test Methods for Liquid Limit, Plastic Limit, and Plasticity Index of Soils (ASTM D 4318).

- Material gradation for soil classification was determined by the Standard Practice for Classification of Soils for Engineering Purposes (ASTM D 2487).

- Material moisture content was determined by the Standard Test Method for Laboratory Determination of Water (Moisture) Content of Soil and Rock by Mass (ASTM D 2216).

- Field description of the material was determined by the Visual-Manual Procedure for Description and Identification of Soils (Test Method Tex-141-E) and supported by the TxDOT Geotechnical Manual.

The data can be found in Appendix A.

- The Moisture-Density relationship of the base and subgrade encountered was determined by the standard test method for Laboratory Compaction Characteristics of Soil Using Standard Effort (12,400 ft-lbf/ft^3(600 kN-m/m^3)) (ASTM D 698).

- An index of strength and deflection characteristics of the base and subgrade encountered was determined by performing the Standard Test Method for CBR (California Bearing Ratio) of Laboratory-Compacted Soils (ASTM D 1883).

The data can be found in Appendix B.

- The Stabilization of Subgrade was determined by the Standard Test Method for Using pH to Estimate the Soil-Lime Proportion Requirement for Soil Stabilization (ASTM D6276)

The data can be found in Appendix D.

- The pH of soils in an aqueous solution was determined by the Standard Test Method for Determining Soil pH (Tex-128-E).

The data can be found in table 2 of this report.

- The Soluble Sulfate Content was determined for the purpose of insuring that there would not be any potential adverse sulfate-lime reaction in the event lime stabilization is recommended by Standard Test Method for Sulfate Content in Soils Colorimetric Method (Tex-145-E).

The data can be found in table 2 and table 4 of this report.

5. SITE AND SUBSURFACE CONDITIONS

5.1 Site Conditions

The Midland International Air & Space Port is located approximately eight (8) miles southwest of Midland, Texas. The topography in the area is generally flat.

The Geological Atlas of Texas (Hobbs Sheet) published by the Bureau of Economic Geology at the University of Texas at Austin indicates that the general geology of the area is Quaternary with Windblown Cover Sand (Qcs) from the Pleistocene period. Windblown cover sand includes fine to medium-grained quartz, silty, calcareous, caliche nodules common, massive, grayish red; distinct soil profile; thickness up to 10 feet, feathers out locally (mostly Illinoian, may include younger deposits).

Appendix C includes an area map of the geological survey provided by the University of Texas at Austin Bureau of Economic Geology as well as a site map of the borehole locations.

5.2 Subsurface Conditions

Borings to depth were generally advanced with ease until a possible bedrock was encountered at boreholes No. 2 and 3 where borings were terminated before than the proposed depth, due to auger refusal. The material sampled varied from medium plasticity clayey sands to gravels with sand. The particular subsurface stratigraphy, as determined by the exploration, is shown in detail in the boring logs (i.e. Appendix A) and in the pictures shown in Appendix E.

Groundwater was not encountered during drilling operations. However, the short-term field observations generally do not permit an accurate evaluation of the subsurface water levels. Any groundwater elevation information provided is representative of conditions existing on the day and for the specific location where the information was taken. The actual groundwater elevation may fluctuate due to time, climatic conditions, and/or construction activities.

6. SUMMARY OF TEST RESULTS

The following is a summary of test results obtained from the field borings information, and laboratory tests of the representative soil samples.

6.1 Summary of Subgrade Materials Test Results

Soil classifications for the subgrade materials encountered are presented in Table 1.

Table 1. Summary of Subgrade Material Results.

Sample No.	Soil Classification	Liquid Limit	Plasticity Index	Moisture Content (%)	Material Passing (%)		
					#4	#40	#200
B1-S2	Clayey SAND (SC)	28	16	9.5	89.1	71.5	35.4
B2-S2	Clayey GRAVEL with Sand (GC)	27	16	8.9	57.3	38.1	21.4
B3-S1	Clayey SAND (SC)	26	14	10.5	96.8	88.4	38.6

6.2 Laboratory CBR Value on Subgrade

Soil classification for the subgrade material used on CBR tests is presented in Table 2.

Table 2. Soil Properties of the subgrade used in the CBR tests.

CBR No.	Soil Classification	Atterberg Limits		Moisture Content	Material Passing (%)			Soluble Sulfate Content (Avg)		Soil pH Value
		LL	PI	(%)	#4	#40	#200	PPM	%	
1	Brown, Clayey SAND with Gravel (SC)	30	16	9.5	73.7	60.9	30.4	120	0.012	9.1
2	Brown, Silty, Clayey GRAVEL with Sand (GC-GM)	18	7	8.9	60.8	50.5	24.7	120	0.012	9.3

The laboratory CBR value presented in Table 3 is based on a 95% maximum dry density (ASTM D-698) compaction level and a soaking period of 96 hours.

Table 3. Summary of CBR Results on subgrade material.

CBR No.	Sample Location	Laboratory Compacted – Soaked CBR	Maximum Dry Density (PCF)	Optimum Moisture (%)	Maximum Percent Swell Measured
1	Test Pit 1 at 31°56'36.70"N 102°12'36.31"W	5.4	117.3	12.7	0.2
2	Test Pit 2 at 31°56'34.91"N 102°12'38.45"W	2.8	118.4	11.9	0.1

The CBR and Proctor Data are shown in Appendix B.

6.3 Laboratory CBR Value on Existing Base/RAP (70/30)

Soil classification for the base materials used on CBR tests is presented in Table 4.

Table 4. Soil classification for the base used in the CBR tests.

CBR No.	Soil Classification	Liquid Limit	Plasticity Index	Moisture Content (%)	Material Passing No. 40 (%)	Material Passing No. 200 (%)	Soluble Sulfate Content (Avg.)	
							ppm	%
3 & 4	TP1: Clayey Sand with Gravel	25	8	5.8	34.8	20.3	100	0.010
	TP2: Silty Sand with Gravel	Non-Plastic		10.2	22.6	20.1	140	0.014

The laboratory CBR values presented in Table 5 are based on a 95% and 100% maximum dry density (MDD) (ASTM D-698) compaction level and a soaking period of 96 hours.

Table 5. Summary of CBR Results on Existing Base/RAP (70/30) material

CBR No.	Sample Location	Laboratory Compacted – Soaked CBR (95% MDD)	Laboratory Compacted – Soaked CBR (100% MDD)	Maximum Dry Density (PCF)	Optimum Moisture (%)
3	Existing Base with 30% RAP	15.8	23.3	123.0	10.0
4	Base From Test Pit 1 & 2	13.7	17.6	125.5	10.3

The CBR and proctor data are shown in Appendix B.

CBR test results are less consistent for materials containing a relatively high percentage of coarse aggregate (i.e., base material), during the construction phase more testing may be necessary to establish a reliable CBR for the Base/RAP material.

6.4 Laboratory Results of Existing Base

The actual gradations for the existing base material obtained from test pits are presented in Table 6.

Table 6. Summary of Base Gradation Results.

Sieve Size	Actual Cumulative Percent Passing		FAA Item P-154 Requirements	FAA Item P-209 Requirements
	TP1 Base	TP2 Base		
2"	100	100	—	100
1 ½"	100	100	100	95 – 100
1	94.5	93.1	—	70 – 95
¾"	88.9①	85.2①	70 – 100	55 – 85
3/8"	72.9	73.6	—	—
# 4	60.4①	62.4①	—	30 – 60
# 10	47.9	29.2	20 – 100	—

Sieve Size	Actual Cumulative Percent Passing		FAA Item P-154 Requirements	FAA Item P-209 Requirements
	TP1 Base	TP2 Base		
# 40	34.8①	22.6	5 – 60	10 – 30
# 200	20.3①②	20.1①②	0 – 10	0 – 5
Liquid Limit	25	Non-Plastic	25 Max	25 Max
Plasticity Index	8①②	Non-Plastic	6 Max	5 Max

① Does not meet specifications for Crushed Aggregate Base, FAA Item P-209.
② Does not meet specifications for Subbase Course, FAA Item P-154.

Base samples from Test Pit No. 1 and 2 were combined to perform the following tests. The test results are presented in Table 7.

Table 7. Properties of Base Materials.

Test Description	Test Results	FAA Item P-154 Requirements	FAA Item P-209 Specification
Flat or Elongated Particles, 5:1 Ratio (%) (ASTM D4791)	0.0	—	10 Max.
Two or More Crushed Faces (%) (ASTM D5821)	84①	—	90 Min.
Los Angeles Abrasion, A Grading (%) (ASTM C131)	31	—	45 Max.
Magnesium Soundness Based on Actual Gradation (%) (ASTM C88)	13	—	18 Max.
Clay Lumps and Friable Particles (%) (ASTM C142)	1	—	3 Max.
California Bearing Ratio (CBR) ③	23.3	20 Min	—

① Does not meet specifications for Crushed Aggregate Base, FAA Item P-209.
③ The CBR value reported above is for recycled Base (70% Base and 30% RAP) material and was based on a 100% maximum dry density (ASTM D-698) compaction level and a soaking period of 96 hours.

6.5 Summary of Existing Pavement Structure

Table 8 is a summary of the existing pavement structure and soil classification of the encountered base material:

Table 8. Summary of Existing Pavement.

Bore No.	Location	Pavement Thickness		Properties of Existing Base		
		HMAC (in)	BASE (in)	Soil Classification	LL	PI
B1	31°56'36.75"N 102°12'36.49"W	4	11	Clayey Gravel with Sand (GC)	24	10
B2	31°56'34.72"N 102°12'37.83"W	4-1/8	12	Clayey Sand with Gravel (SC)	25	11
B3	31°56'32.97"N 102°12'38.18"W	3	12	-	-	-

Base samples from boring locations were obtained by drilling method (i.e., B1, B2, & B3), drilling with an auger through the base layer might cause degradation of the coarse aggregate; therefore, gradation and plasticity test results of base samples obtained from the borings by drilling may vary from the in-place base material.

7. CONCLUSIONS AND RECOMMENDATIONS

The following conclusions and recommendations are based upon the data obtained from the field testing, borings, test pits, and laboratory testing of the soil samples, the project information provided to us by Parkhill, and experience with similar soils and site conditions.

7.1 General Pavement Recommendations

Areas containing unsuitable materials (with vegetable or organic matter) should be removed to avoid differential settlements due to the decomposition of these materials. Unsuitable materials shall be disposed to authorized areas or if approved, used for embankment slopes to support vegetation.

All undercut and grading of existing subgrade shall comply with the requirements of FAA Item P-152. The excavated areas may be refilled with suitable material obtained from the grading operations or borrow areas and compacted to a minimum of 95% of Proctor Density (Standard ASTM D-698 for aircraft with a gross weight of 60,000 pounds or less, and Modified ASTM D1557 for aircraft greater than 60,000 pounds) and the moisture content of the material during placement shall be within ±2% of the optimum moisture content.

If embankment is utilized for lower areas, it should comply with the requirements of FAA Item P-152. Compact the material to a minimum of 95% of Proctor Density (Standard ASTM D-698 for aircraft with a gross weight of 60,000 pounds or less, and Modified ASTM D1557 for aircrafts greater than 60,000 pounds) and the moisture content of the material during placement shall be within ±2% of the optimum moisture content. For non-cohesive material, the top six (6) inches of the embankment should be compacted to 100% maximum density. The material should be placed in successive horizontal layers of not less than six (6) inches nor more than 12 inches of compacted thickness, for the entire width of the cross-section. The compaction of side slopes should be parallel to the long direction of the side slopes. Pieces larger than 4 inches will not be allowed on the upper 6-inch course. The embankment should extend 5 feet from the pavement edge.

Subgrade preparation shall comply with the requirements of FAA Item P-152. Compact non-cohesive material to 100% or cohesive material to 95% of Proctor Density (Standard ASTM D-698 for aircraft with a gross weight of 60,000 pounds or less, and Modified ASTM D1557 for aircrafts greater than 60,000 pounds) and the moisture content of the material during placement shall be within ±2% of the optimum moisture content.

Two subgrade samples containing clay were analyzed for Sulfate Content and were found to be less than 3000 ppm by weight of dry soil. The *TxDOT Guidelines for Treatment of Sulfate-Rich Soils and Bases in Pavement Structures* (*) suggests that soils with sulfate levels of 3000 ppm or less pose a low potential for sulfate heave if stabilized with lime, provided that it's properly mixed with adequate moisture. If the clayey subgrade material contains a high concentration of sulfates, it will react with lime or cement and cause localized heave in the pavement. The heave can be extreme enough to cause propeller strikes or damage to the suspension of the planes. During construction, the subgrade should be periodically analyzed for sulfate content, obtaining samples every 500 feet as a minimum prior to the addition of any lime. If it is determined that the sulfate content of the soil is higher than what was determined during the geotechnical investigation, REL should be notified to re-evaluate the changed conditions. Material containing a high concentration of sulfate shall be replaced.

Subgrade material having a plasticity index (PI) exceeding 20 should be stabilized with lime slurry to a minimum depth of 10 inches. Subgrade material having a PI of 20 or less shall be stabilized using cement to a minimum depth of 10 inches. Geo-synthetics may be used for non-cohesive subgrade material.

If lime is used to stabilize the subgrade, it shall comply with the requirements of FAA Item P-155 (slurry-lime). The percentage (based on the dry weight of the soil) of lime required to stabilize the subgrade at the final elevation was not determined; however, testing should be performed during construction after cut/fill operations to determine the lime required to stabilize the final subgrade material. Compact the material to a minimum of 95% of Standard Proctor Density ASTM D-698 and the moisture content of the mixture at the start of the compaction shall not be below nor more than 2% of the optimum moisture. The lime-treated subgrade should extend at least nine (9) feet from the pavement edge.

If a subbase course is used, it shall comply with the requirements of FAA Item P-154. Compact the material to a minimum of 100% of the maximum dry density as determined by the Proctor Density (Standard ASTM D-698 for aircraft with gross weight of 60,000 pounds or less, and Modified ASTM D1557 for aircrafts greater than 60,000 pounds) and the moisture content of the material during placement shall be within ±2% of the optimum moisture content. Subbase material should extend 2 feet from the pavement edge.

If crushed aggregate base is used, it shall comply with the requirements of FAA Item P-209. Compact the material to a minimum of 100% of the maximum dry density as determined by the Proctor Density (Standard ASTM D-698 for aircraft with a gross weight of 60,000 pounds or less, and Modified ASTM D1557 for aircraft greater than 60,000 pounds) and the moisture content of the material during placement shall be within ±2% of the optimum moisture content. Base material should extend 2 feet from the pavement edge. Topsoil should be placed over the base extension to protect the base from excess water penetration and to prevent erosion.

HMAC pavement shall comply with the requirements of FAA specification Item P-401 (Plant Mix Bituminous Pavements) for 3/4" maximum nominal size aggregate (50-blow or 50-gyrations compaction for aircraft with a gross weight of less than 60,000 pounds or tire pressure of less than 100 Psi, and 75-blow or 75-gyrations compaction for aircraft of 60,000 pounds or more, or tire pressure of 100 Psi or more). Mix complying with this specification has sufficient asphalt to better resist oxidation and age hardening to which pavements receiving intermittent traffic are susceptible.

Care should be taken to slope the site to prevent water ponding around or on the pavement structure during and after construction. Once completed, the ground surface should slope away from the pavement and have enough topsoil to grow vegetative cover to prevent erosion. It should be known that the extensive use of a vibratory roller, or heavy construction equipment, might wick the groundwater through the soil and into the pavement causing pumping during construction. If this problem arises, the use of the vibratory roller, or heavy construction equipment, may need to be limited and the conditions may need to be evaluated.

It was also determined that the topsoil encountered during our investigation can be excavated using conventional earth-moving equipment (ripper, trencher, backhoe). However, if bedrock is encountered, rock hammers or possibly blasting may be required.

(*) *TxDOT Guidelines for Treatment of Sulfate-Rich Soils and Bases in Pavement Structures*

8. LIMITATIONS

This investigation was performed in accordance with accepted geotechnical engineering practices for the exclusive use of Parkhill in the preparation of the design, construction, drawings, and specifications for the proposed improvements at the Midland International Air Space Port in Midland, Texas. Verification of subsurface conditions for purposes of determining the difficulty of excavation, dewatering, trafficability, etc., is the responsibility of others specializing in those areas. Our geotechnical scope of work for this site did not include an environmental assessment or chemical testing and analysis of the property's air, water, and subsurface soils. This report is not intended for use in determining construction means and methods and may therefore be misleading if used for that purpose. In the event that any changes in the nature, design, or locations of these structures are made from those assumed herein, the conditions and recommendations contained in this report shall not be considered valid until the changes are reviewed and the conclusions are verified in writing.

9. APPENDIX

Appendix A:

Bore Log Data

Rodriguez Engineering Laboratories

Bore Log Data

Boring No. 1

Project: Midland International Air and Space Port
Location: Taxiway "E" at 31°56'36.75"N; 102°12'36.49" W
Date Drilled: 1/26/2023

Boring Depth: 10 ft.
Water Level: N / A
Drilling Method: A = Auger
C = Core

Depth (ft)	Soil Symbol	Sample No.	Laboratory Classification: Material Description	Laboratory Classification: Group Symbol	Drilling Method	Moisture Content (%)	Atterberg Limits: LL	Atterberg Limits: PI	Sieve Analysis, Percent Passing: 3"	7/8"	3/4"	3/8"	No.4	No.10	No.40	No.200	Depth (ft)
		C-1	4" HMAC		C												
1.0		B1S1	11" BASE. Light Brown, Clayey Gravel with Sand	GC	A	5.8	24	10	100.0	98.3	94.2	76.1	59.1	42.9	31.1	19.3	1.0
2.0		B1S2	Brown, Clayey SAND	SC	A	9.5	28	16	100.0	100.0	100.0	94.4	89.1	80.7	71.5	35.4	2.0
3.0		B1S3	Brown, Clayey SAND	SC	A	9.9	25	14	100.0	100.0	100.0	98.6	96.2	93.2	88.1	33.8	3.0
4.0																	4.0
5.0																	5.0
6.0		B1S4	Brown, Clayey SAND	SC	A	10.0	30	19	100.0	100.0	100.0	98.8	97.7	96.3	92.1	35.2	6.0
7.0		B1S5	Reddish Brown, Clayey SAND	SC	A	-	25	12	100.0	100.0	100.0	100.0	99.9	99.0	95.4	27.6	7.0
8.0																	8.0
9.0																	9.0
10.0		B1S6	Brown, Clayey SAND	SC	A	8.3	27	15	100.0	100.0	100.0	99.3	98.7	97.7	94.1	28.9	10.0

Boring terminated at 10 ft. No groundwater was encountered.

Rodriguez Engineering Laboratories

Bore Log Data
Boring No. 2

Project: Midland International Air and Space Port
Location: Taxiway "E" at 31°56'34.72"N; 102°12'37.83" W
Date Drilled: 1/26/2023

Boring Depth: 4 ft.
Water Level: N / A
Drilling Method: A = Auger
C = Core

Depth (ft)	Soil Symbol	Sample No.	Laboratory Classification: Material Description	Laboratory Classification: Group Symbol	Drilling Method	Moisture Content (%)	Atterberg Limits: LL	Atterberg Limits: PI	Sieve Analysis, Percent Passing: 3"	7/8"	3/4"	3/8"	No.4	No.10	No.40	No.200	Depth (ft)
		C-2	4" HMAC		C												
0.5		B2S1	12" BASE. Light Brown, Clayey Sand with Gravel	SC	A	10.2	25	11	100.0	98.1	93.4	86.5	73.4	61.1	50.2	27.4	0.5
1.0																	1.0
1.5		B2S2	Reddish Brown, Clayey GRAVEL with Sand	GC	A	8.9	27	16	100.0	100.0	93.6	72.2	57.3	46.0	38.1	21.4	1.5
2.0																	2.0
2.5																	2.5
		NS															
3.0																	3.0
3.5																	3.5
4.0																	4.0
			Boring terminated at 4 ft due to auger refusal. No groundwater was encountered.														
4.5																	4.5
5.0																	5.0

Rodriguez Engineering Laboratories

Bore Log Data
Boring No. 3

Project: Midland International Air and Space Port
Location: Taxiway "E" at 31°56'32.97"N; 102°12'38.18" W
Date Drilled: 1/26/2023

Boring Depth: 4 ft.
Water Level: N / A
Drilling Method: A = Auger
C = Core

Depth (ft)	Soil Symbol	Sample No.	Laboratory Classification: Material Description	Laboratory Classification: Group Symbol	Drilling Method	Moisture Content (%)	Atterberg Limits: LL	Atterberg Limits: PI	Sieve Analysis, Percent Passing: 3"	7/8"	3/4"	3/8"	No.4	No.10	No.40	No.200	Depth (ft)
		C-3	3" HMAC		C												
0.5		NS	12" BASE		A												0.5
1.0																	1.0
1.5		B3S1	Brown, Clayey SAND	SC	A	10.5	26	14	100.0	100.0	100.0	98.4	96.8	93.7	88.4	38.6	1.5
2.0																	2.0
2.5																	2.5
3.0																	3.0
3.5		B3S2	Brown, Clayey SAND	SC	A	9.9	28	17	100.0	100.0	100.0	99.3	96.3	91.0	82.8	39.4	3.5
4.0																	4.0
			Boring terminated at 4 ft due to auger refusal. No groundwater was encountered.														
4.5																	4.5
5.0																	5.0

LEGEND OF TERMINOLOGY

GRAVELS More than half of Coarse fraction is LARGER than No. 4 Sieve	**Clean Gravels** Little or no Fines	**GW**	Well-Graded, gravel-sand mixtures, mixtures, little or no fines
		GP	Poorly-Graded gravels, gravel-sand mixtures, little or no fines
	Gravels with Fines Appreciable Amount of fines	**GM**	Silty gravels, gravel-sand-silt mixtures
		GC	Clayey gravels, gravel-sand-clay Mixtures
SANDS More than half of Coarse fraction is SMALLER than No. 4 Sieve	**Clean Sands** Little or no Fines	**SW**	Well-Graded sands, gravely sands, little or no fines
		SP	Poorly-Graded sands, gravely sands little or no fines
	Sands with Fines Appreciable Amount of fines	**SM**	Silty sands, sand-silt mixtures
		SC	Clayey sands, sand-clay mixtures
SILTS and CLAYS Liquid Limit LESS than 50		**ML**	Inorganic silts & very fine sands, rock flour, silty or clayey fine sands or clayey silts w/slight plasticity
		CL	Inorganic clays of low to medium plasticity, gravely clays, sandy clays
		OL	Organic silts & organic silty clays of low plasticity
SILTS and CLAYS Liquid Limit GREATER than 50		**MH**	Inorganic silts, micoceous or diatomaceous fine sand or silty soils, elastic silts
		CH	Inorganic clays of high plasticity, fat clays
		OH	Organic clays of medium to high plasticity, organic silts
Highly ORGANIC Soils		**PI**	Peat & other highly organic soils

Legend of Symbols

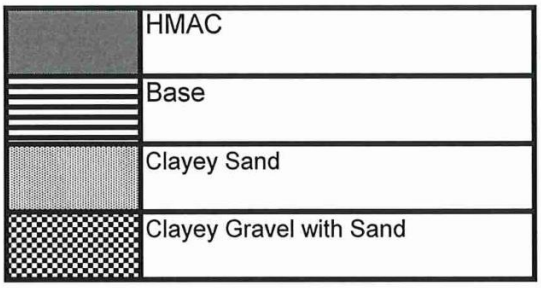

Appendix B:

Proctor and CBR Data

Midland International Air and Space Port
Midland, Texas
Proctor Chart for CBR Sample No. 1

Laboratory No:	RE23-0241-1	**Compactive Effort:**	ASTM D698-C
Material Type:	Subgrade	**Maximum Density** (pcf):	**117.3**
Sample Location:	Test Pit 1	**Optimum Moisture** (%):	**12.7**

Specimen No.	1	2	3	4	5
% Water Added	4.0	6.0	8.0	10.0	--
Net Wt. Of Specimen & Mold (g)	6953.3	7200.0	7162.9	7012.8	--
Tare Wt. Of Mold (g)	2714.8	2714.8	2714.8	2714.8	--
Wet Wt. Of Specimen (lb)	9.344	9.888	9.806	9.475	--
Volume of Specimen (ft^3)	0.0750	0.0750	0.0750	0.0750	--
Wet Density of Specimen (pcf)	124.6	131.8	130.8	126.3	--
Guesstimated Dry Density (pcf)	119.8	124.4	121.1	114.9	--
Wet Wt. Of Specimen & Pan (g)	5564.2	5725.2	5734.0	5524.5	--
Dry Wt. Of Specimen & Pan (g)	5164.7	5226.2	5168.2	4920.8	--
Tare Wt. Of Pan (g)	1318.1	1242.9	1285.4	1241.5	--
Wt. Of Water (g)	399.5	499.0	565.8	603.7	--
Dry Wt. Of Material (g)	3846.6	3983.3	3882.8	3679.3	--
Total % Moisture of Specimen	**10.4**	**12.5**	**14.6**	**16.4**	--
Dry Density of Specimen (pcf)	**112.9**	**117.2**	**114.1**	**108.5**	--

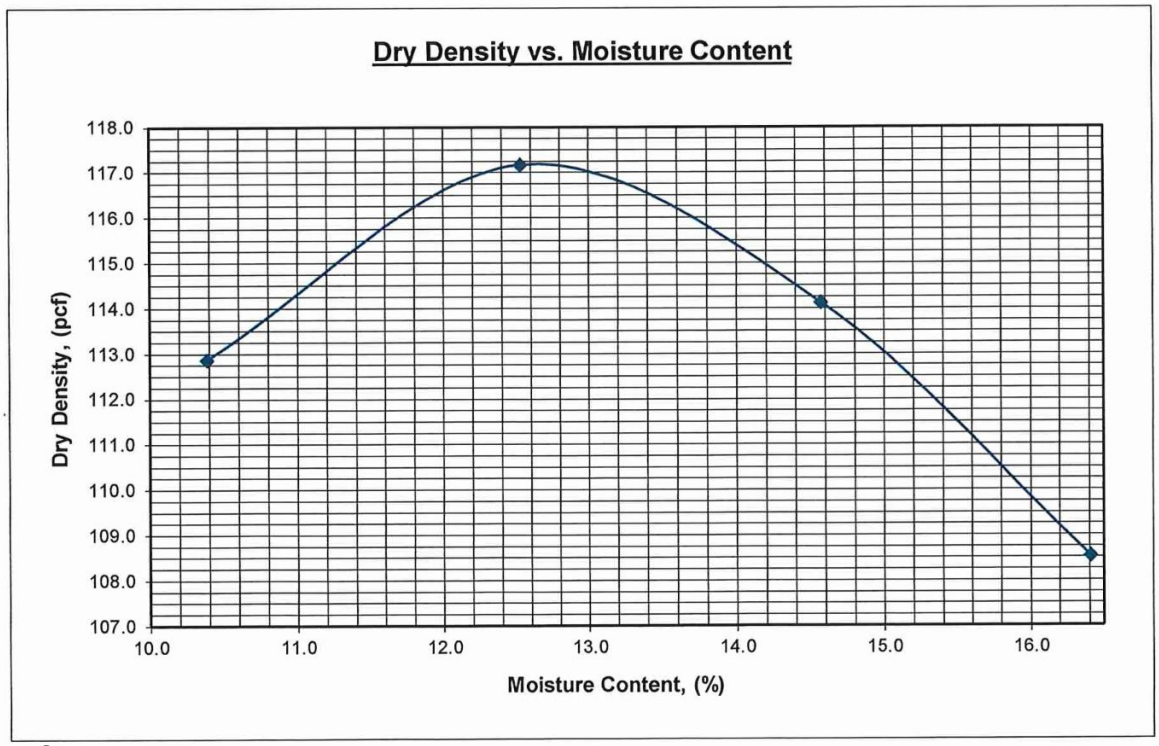

Midland International Air and Space Port
Midland, Texas
Proctor Chart for CBR Sample No. 1

Laboratory No: RE23-0241-1
Material Type: Subgrade
Sample Location: Test Pit 1

Compactive Effort: ASTM D698-C
Maximum Density (pcf)**:** **117.3**
Optimum Moisture (%)**:** **12.7**

Specimen No.	1	2	3
No. of Blows	**10 Blows**	**25 Blows**	**56 Blows**
Net Wt. Of Spec.& Mold (g)	8292.9	8620.8	8711.1
Tare Wt. Of Mold (g)	4176.7	4216.8	4215.0
Wet Wt. Of Specimen (lb)	9.075	9.709	9.912
Volume of Specimen (ft^3)	0.0750	0.0750	0.0750
Wet Density of Spec.(pcf)	121.0	129.5	132.2
Wet Wt. of Spec.& Pan (g)	1853.6	1853.6	1853.6
Dry Wt. Of Spec. & Pan (g)	1736.6	1736.6	1736.6
Tare Wt. Of Pan (g)	835.5	835.5	835.5
Wt. Of Water (g)	117.0	117.0	117.0
Dry Wt. Of Material (g)	901.1	901.1	901.1
Total % Moisture of Spec.	**13.0**	**13.0**	**13.0**
Target % Moisture of Spec.	**12.7**	**12.7**	**12.7**
Dry Density of Spec. (pcf)	**107.1**	**114.6**	**117.0**
Initial Measurement (Div.)	60	60	60
Final Measurement (Div.)	69	67	70
Percentage of Swelling	**0.2**	**0.2**	**0.2**

10 blows/lift

Penetration (in)	Load (lb)	Stress (psi)
0.025	40.5	13.5
0.050	67.9	22.6
0.075	91.9	30.6
0.100	106.7	35.6
0.125	116.5	38.8
0.150	125.3	41.8
0.175	134.5	44.8
0.200	144.7	48.2
0.300	179.8	59.9
0.400	211.2	70.4
0.500	238.1	79.4

25 blows/lift

Penetration (in)	Load (lb)	Stress (psi)
0.025	64.9	21.6
0.050	112.9	37.6
0.075	156.3	52.1
0.100	192.1	64.0
0.125	220.6	73.5
0.150	246.6	82.2
0.175	273.1	91.0
0.200	294.6	98.2
0.300	371.2	123.7
0.400	436.4	145.5
0.500	489.6	163.2

56 blows/lift

Penetration (in)	Load (lb)	Stress (psi)
0.025	83.8	27.9
0.050	170.2	56.7
0.075	214.5	71.5
0.100	296.4	98.8
0.125	354.2	118.1
0.150	405.8	135.3
0.175	449.8	149.9
0.200	495.5	165.2
0.300	645.2	215.1
0.400	762.6	254.2
0.500	853.8	284.6

Midland International Air and Space Port
Midland, Texas
Proctor Chart for CBR Sample No. 1

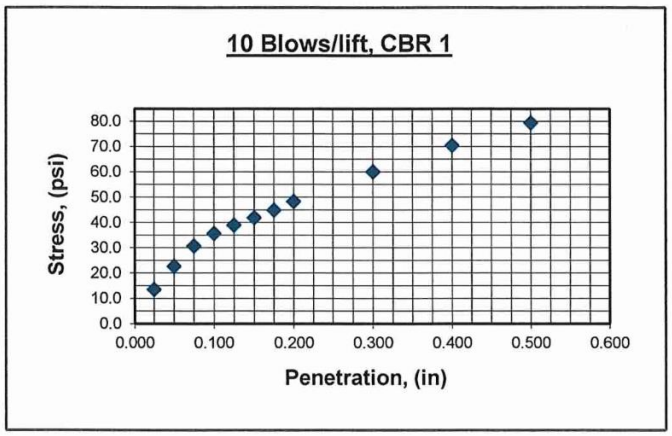

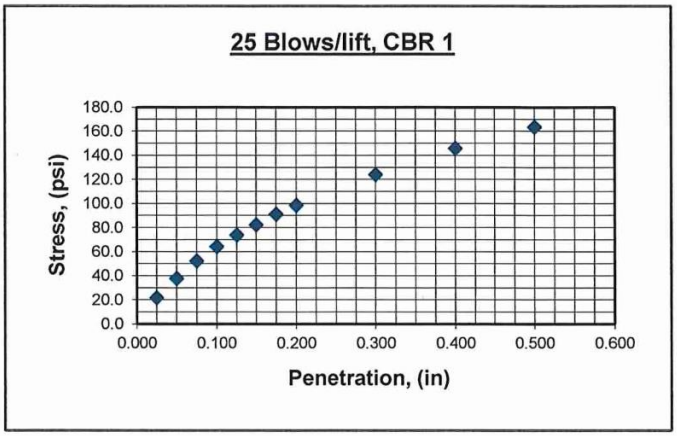

Dry Density @ 10 Blows/lift (pcf) = 107.1

$CBR_{0.100}$ = (35.6 /1000) x 100 = 3.56

$CBR_{0.200}$ = (48.2 /1500) x 100 = 3.22

Use CBR = **3.56**

Dry Density @ 25 Blows/lift (pcf) = 114.6

$CBR_{0.100}$ = (64.0 /1000) x 100 = 6.40

$CBR_{0.200}$ = (98.2 /1500) x 100 = 6.55

Use CBR = **6.55**

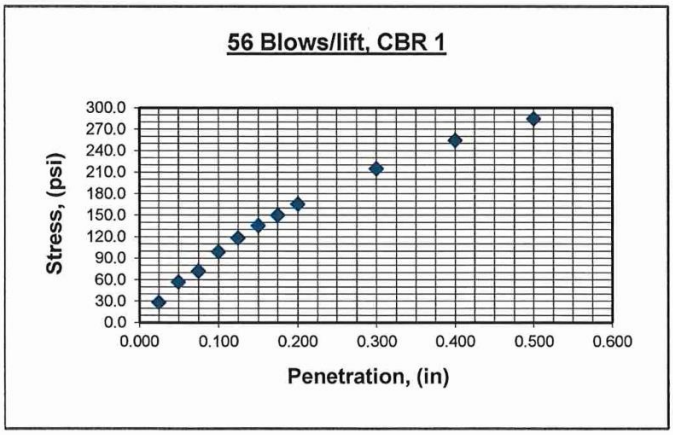

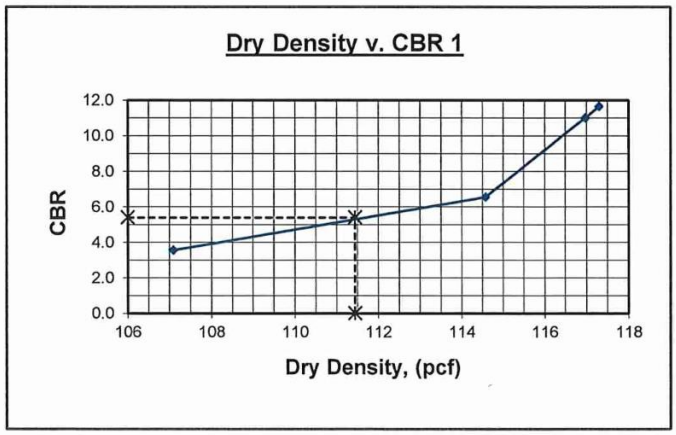

Dry Density @ 56 Blows/lift (pcf) = 117.0

$CBR_{0.100}$ = (98.8 /1000) x 100 = 9.88

$CBR_{0.200}$ = (165.2 /1500) x 100 = 11.01

Use CBR = **11.01**

Design CBR @ 95 % Max. Dry Density = **5.4**

Design CBR @ 100% Max. Dry Density = **11.7**

Midland International Air and Space Port
Midland, Texas
Proctor Chart for CBR Sample No. 2

Laboratory No:	RE23-0241-2	**Compactive Effort:**	ASTM D698-C
Material Type:	Subgrade	**Maximum Density** (pcf)**:**	**118.4**
Sample Location:	Test Pit 2	**Optimum Moisture** (%)**:**	**11.9**

Specimen No.	1	2	3	4	5
% Water Added	7.0	8.0	9.0	10.0	--
Net Wt. Of Specimen & Mold (g)	6832.0	7136.1	7241.0	7143.2	--
Tare Wt. Of Mold (g)	2714.8	2714.8	2714.8	2714.8	--
Wet Wt. Of Specimen (lb)	9.077	9.747	9.978	9.763	--
Volume of Specimen (ft^3)	0.0750	0.0750	0.0750	0.0750	--
Wet Density of Specimen (pcf)	121.0	130.0	133.0	130.2	--
Guesstimated Dry Density (pcf)	113.1	120.3	122.1	118.3	--
Wet Wt. Of Specimen & Pan (g)	5431.0	5668.1	5721.0	5715.5	--
Dry Wt. Of Specimen & Pan (g)	5101.1	5242.8	5202.7	5127.9	--
Tare Wt. Of Pan (g)	1310.8	1245.0	1194.1	1288.6	--
Wt. Of Water (g)	329.9	425.3	518.3	587.6	--
Dry Wt. Of Material (g)	3790.3	3997.8	4008.6	3839.3	--
Total % Moisture of Specimen	**8.7**	**10.6**	**12.9**	**15.3**	--
Dry Density of Specimen (pcf)	**111.3**	**117.5**	**117.8**	**112.9**	--

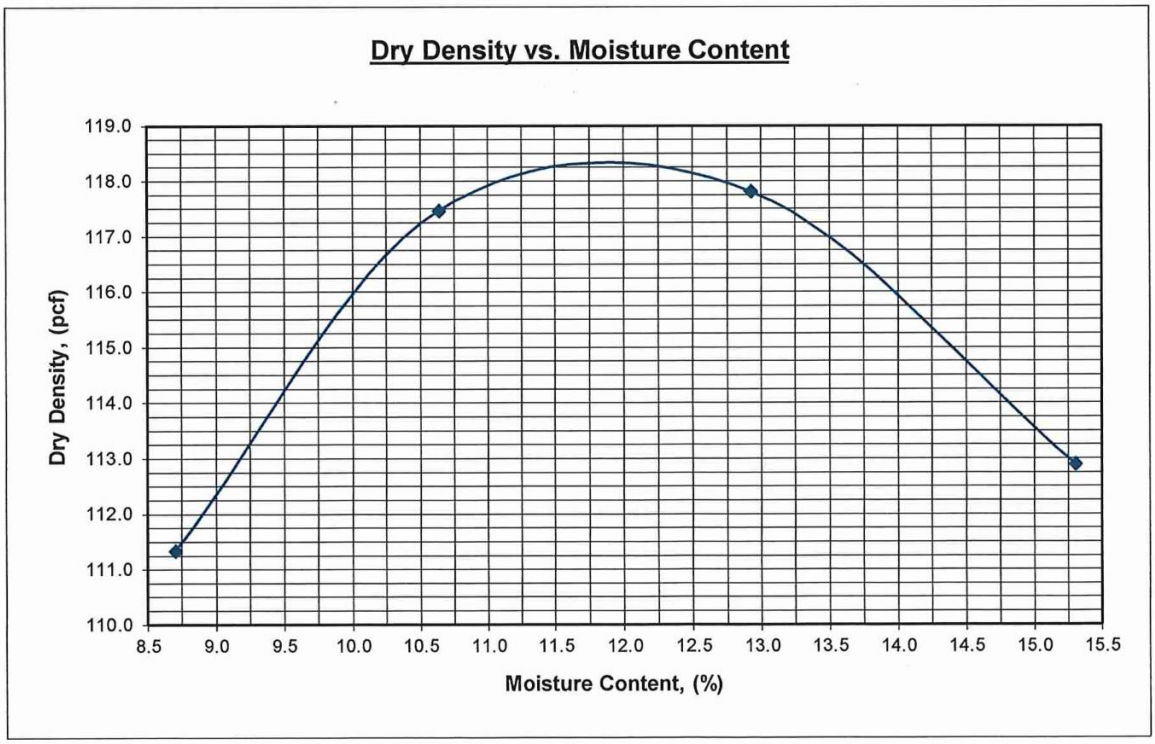

Midland International Air and Space Port
Midland, Texas
Proctor Chart for CBR Sample No. 2

Laboratory No: RE23-0241-2
Material Type: Subgrade
Sample Location: Test Pit 2

Compactive Effort: ASTM D698-C
Maximum Density (pcf)**:** **118.4**
Optimum Moisture (%)**:** **11.9**

Specimen No.	1	2	3
No. of Blows	**10 Blows**	**25 Blows**	**56 Blows**
Net Wt. Of Spec.& Mold (g)	8531.7	8661.2	8667.6
Tare Wt. Of Mold (g)	4202.9	4218.3	4204.6
Wet Wt. Of Specimen (lb)	9.543	9.795	9.839
Volume of Specimen (ft^3)	0.0750	0.0750	0.0750
Wet Density of Spec.(pcf)	127.2	130.6	131.2
Wet Wt. of Spec.& Pan (g)	1902.8	1902.8	1902.8
Dry Wt. Of Spec. & Pan (g)	1768.4	1768.4	1768.4
Tare Wt. Of Pan (g)	826.9	826.9	826.9
Wt. Of Water (g)	134.4	134.4	134.4
Dry Wt. Of Material (g)	941.5	941.5	941.5
Total % Moisture of Spec.	**14.3**	**14.3**	**14.3**
Target % Moisture of Spec.	**11.9**	**11.9**	**11.9**
Dry Density of Spec. (pcf)	**111.3**	**114.3**	**114.8**
Initial Measurement (Div.)	60	60	60
Final Measurement (Div.)	64	59	53
Percentage of Swelling	**0.1**	**0.0**	**-0.2**

10 blows/lift

Penetration (in)	Load (lb)	Stress (psi)
0.025	29.7	9.9
0.050	46.2	15.4
0.075	61.5	20.5
0.100	75.2	25.1
0.125	87.8	29.3
0.150	99.7	33.2
0.175	110.2	36.7
0.200	119.6	39.9
0.300	152.5	50.8
0.400	175.8	58.6
0.500	200.1	66.7

25 blows/lift

Penetration (in)	Load (lb)	Stress (psi)
0.025	45.0	15.0
0.050	59.7	19.9
0.075	70.6	23.5
0.100	79.6	26.5
0.125	89.4	29.8
0.150	98.2	32.7
0.175	104.9	35.0
0.200	111.6	37.2
0.300	135.0	45.0
0.400	153.2	51.1
0.500	169.9	56.6

56 blows/lift

Penetration (in)	Load (lb)	Stress (psi)
0.025	46.1	15.4
0.050	64.3	21.4
0.075	80.0	26.7
0.100	92.3	30.8
0.125	102.6	34.2
0.150	114.7	38.2
0.175	125.0	41.7
0.200	134.4	44.8
0.300	169.1	56.4
0.400	194.4	64.8
0.500	211.9	70.6

Midland International Air and Space Port
Midland, Texas
Proctor Chart for CBR Sample No. 2

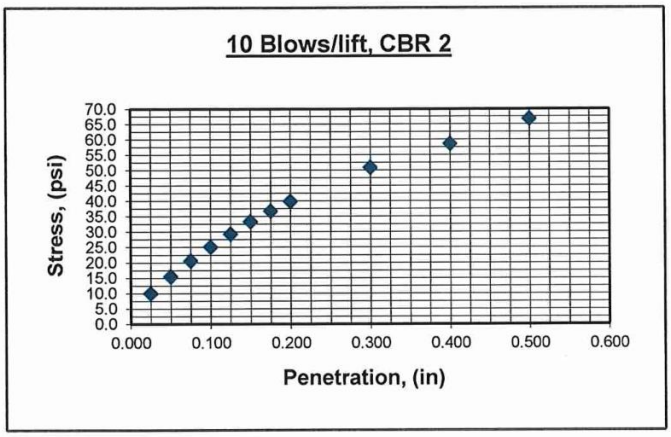

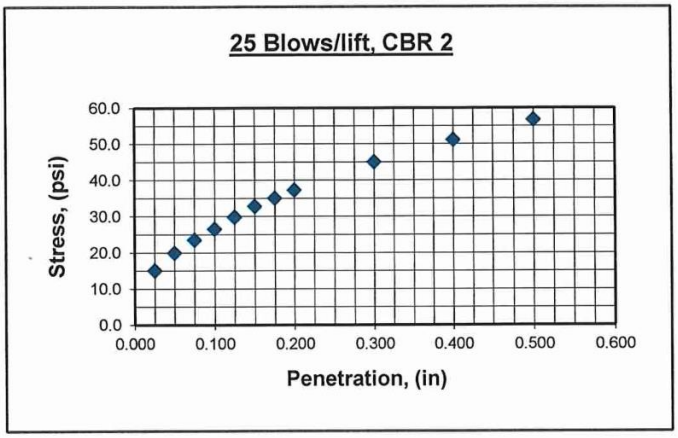

Dry Density @ 10 Blows/lift (pcf) = 111.3

$CBR_{0.100}$ = (25.1 /1000) x 100 = 2.51

$CBR_{0.200}$ = (39.9 /1500) x 100 = 2.66

Use CBR = 2.66

Dry Density @ 25 Blows/lift (pcf) = 114.3

$CBR_{0.100}$ = (26.5 /1000) x 100 = 2.65

$CBR_{0.200}$ = (37.2 /1500) x 100 = 2.48

Use CBR = 2.65

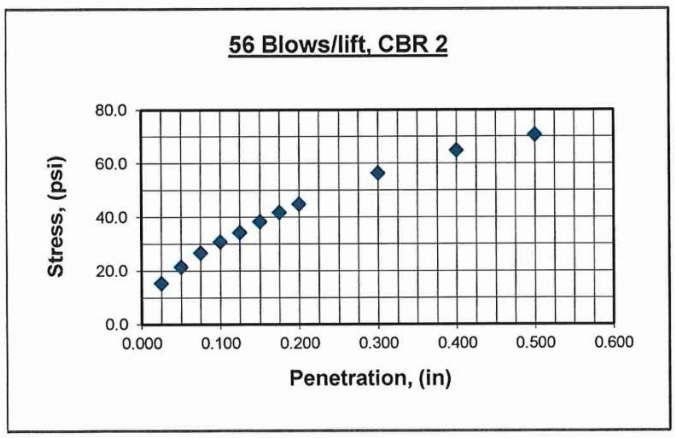

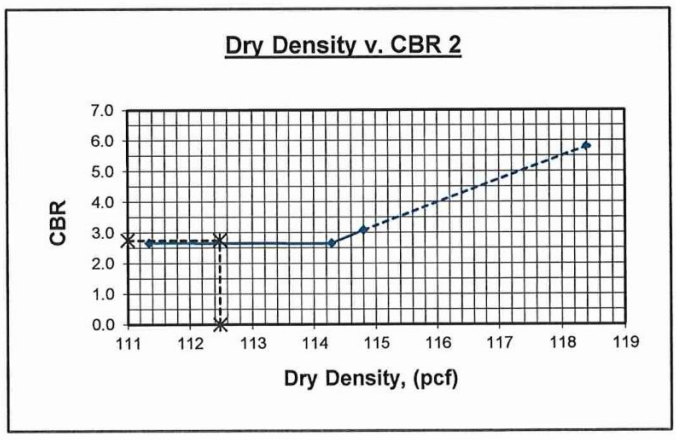

Dry Density @ 56 Blows/lift (pcf) = 114.8

$CBR_{0.100}$ = (30.8 /1000) x 100 = 3.08

$CBR_{0.200}$ = (44.8 /1500) x 100 = 2.99

Use CBR = 3.08

Design CBR @ 95 % Max. Dry Density = 2.8

Design CBR @ 100% Max. Dry Density = 5.8

Midland International Air and Space Port
Midland, Texas
Proctor Chart for CBR Sample No. 3

Laboratory No:	RE23-0241-3	**Compactive Effort:**	ASTM D698-C
Material Type:	Existing Base with 30% RAP	**Maximum Density** (pcf):	**123.0**
Sample Location:	Combined sample of TP 1 & 2	**Optimum Moisture** (%):	**10.0**

Specimen No.	1	2	3	4	5
% Water Added	4.0	6.0	8.0	10.0	--
Net Wt. Of Specimen & Mold (g)	6858.1	7177.1	7327.0	7318.0	--
Tare Wt. Of Mold (g)	2714.8	2714.8	2714.8	2714.8	--
Wet Wt. Of Specimen (lb)	9.134	9.838	10.168	10.148	--
Volume of Specimen (ft^3)	0.0750	0.0750	0.0750	0.0750	--
Wet Density of Specimen (pcf)	121.8	131.2	135.6	135.3	--
Guesstimated Dry Density (pcf)	117.1	123.7	125.5	123.0	--
Wet Wt. Of Specimen & Pan (g)	5418.5	5742.1	5818.8	5868.3	--
Dry Wt. Of Specimen & Pan (g)	5183.3	5405.1	5387.8	5372.1	--
Tare Wt. Of Pan (g)	1285.4	1280.3	1204.6	1257.7	--
Wt. Of Water (g)	235.2	337.0	431.0	496.2	--
Dry Wt. Of Material (g)	3897.9	4124.8	4183.2	4114.4	--
Total % Moisture of Specimen	**6.0**	**8.2**	**10.3**	**12.1**	--
Dry Density of Specimen (pcf)	**114.9**	**121.3**	**122.9**	**120.7**	--

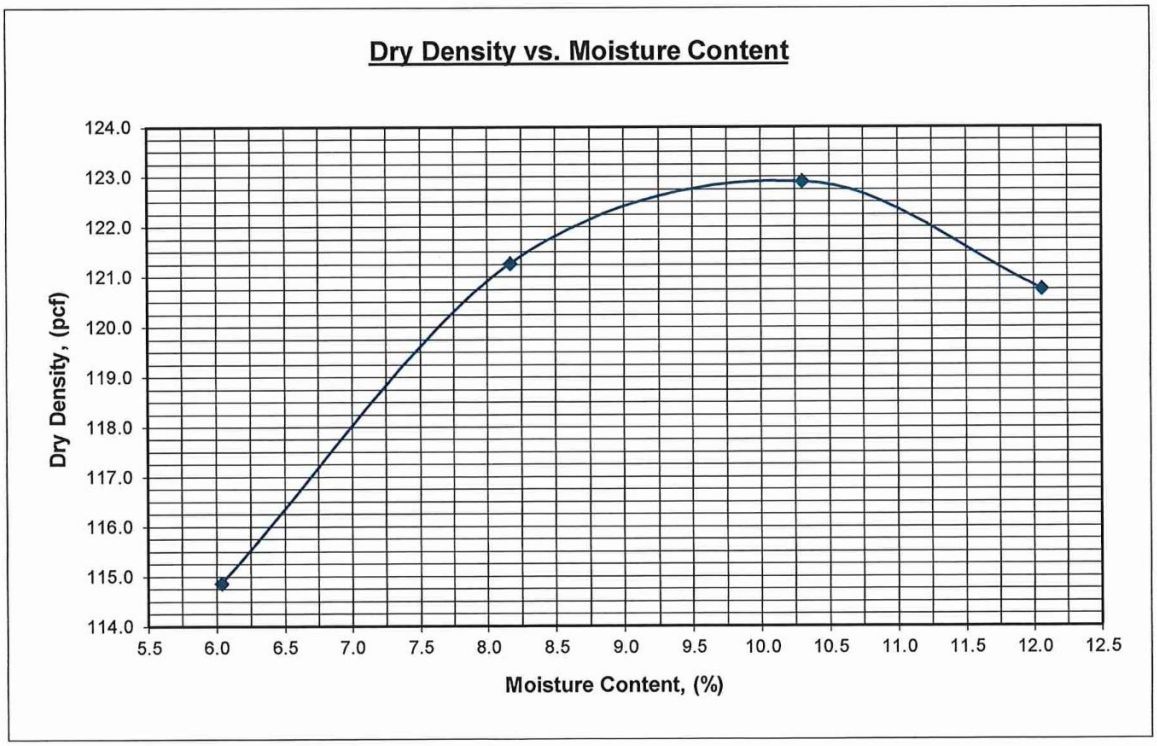

Midland International Air and Space Port
Midland, Texas
Proctor Chart for CBR Sample No. 3

Laboratory No: RE23-0241-3
Material Type: Existing Base with 30% RAP
Sample Location: Combined sample of TP 1 & 2

Compactive Effort: ASTM D698-C
Maximum Density (pcf)**:** **123.0**
Optimum Moisture (%)**:** **10.0**

Specimen No.	1	2	3
No. of Blows	**10 Blows**	**25 Blows**	**56 Blows**
Net Wt. Of Spec.& Mold (g)	8629.6	8845.3	8930.0
Tare Wt. Of Mold (g)	4174.8	4216.9	4202.3
Wet Wt. Of Specimen (lb)	9.821	10.204	10.423
Volume of Specimen (ft^3)	0.0750	0.0750	0.0750
Wet Density of Spec.(pcf)	130.9	136.1	139.0
Wet Wt. of Spec.& Pan (g)	1905.2	1905.2	1905.2
Dry Wt. Of Spec. & Pan (g)	1813.3	1813.3	1813.3
Tare Wt. Of Pan (g)	890.9	890.9	890.9
Wt. Of Water (g)	91.9	91.9	91.9
Dry Wt. Of Material (g)	922.4	922.4	922.4
Total % Moisture of Spec.	**10.0**	**10.0**	**10.0**
Target % Moisture of Spec.	**10.0**	**10.0**	**10.0**
Dry Density of Spec. (pcf)	**119.1**	**123.7**	**126.4**
Initial Measurement (Div.)	60	60	60
Final Measurement (Div.)	65	59	56
Percentage of Swelling	**0.1**	**0.0**	**-0.1**

10 blows/lift

Penetration (in)	Load (lb)	Stress (psi)
0.025	132.7	44.2
0.050	196.5	65.5
0.075	275.8	91.9
0.100	354.7	118.2
0.125	457.9	152.6
0.150	552.9	184.3
0.175	655.9	218.6
0.200	744.4	248.1
0.300	1134.8	378.3
0.400	1477.5	492.5
0.500	2032.8	677.6

25 blows/lift

Penetration (in)	Load (lb)	Stress (psi)
0.025	100.9	33.6
0.050	166.7	55.6
0.075	252.6	84.2
0.100	350.7	116.9
0.125	450.1	150.0
0.150	563.4	187.8
0.175	685.0	228.3
0.200	822.8	274.3
0.300	1364.7	454.9
0.400	1958.0	652.7
0.500	2607.9	869.3

56 blows/lift

Penetration (in)	Load (lb)	Stress (psi)
0.025	81.4	27.1
0.050	164.4	54.8
0.075	281.3	93.8
0.100	413.7	137.9
0.125	542.8	180.9
0.150	702.6	234.2
0.175	861.1	287.0
0.200	1047.9	349.3
0.300	1864.4	621.5
0.400	2735.8	911.9
0.500	3546.1	1182.0

Midland International Air and Space Port
Midland, Texas
Proctor Chart for CBR Sample No. 3

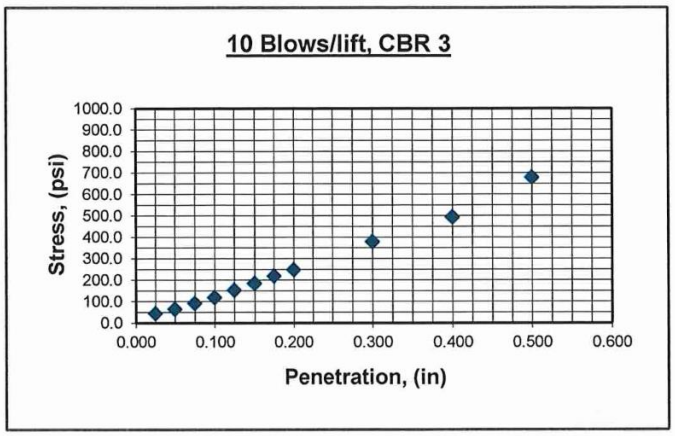

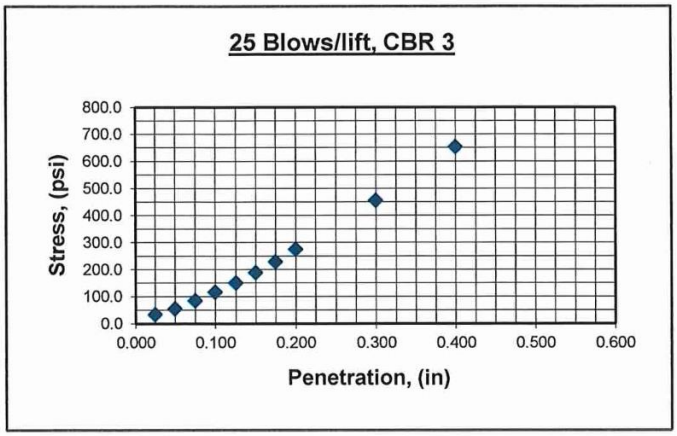

Dry Density @ 10 Blows/lift (pcf) = 116.9

$CBR_{0.100}$ = (118.2 /1000) x 100 = 11.82

$CBR_{0.200}$ = (248.1 /1500) x 100 = 16.54

Use CBR = **16.54**

Dry Density @ 25 Blows/lift (pcf) = 119.1

$CBR_{0.100}$ = (116.9 /1000) x 100 = 11.69

$CBR_{0.200}$ = (274.3 /1500) x 100 = 18.28

Use CBR = **18.28**

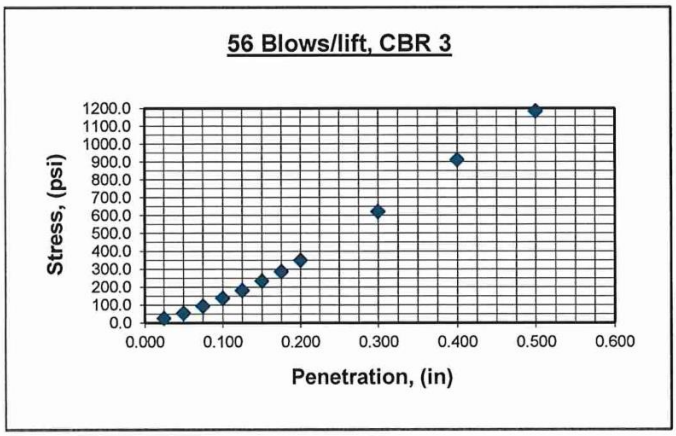

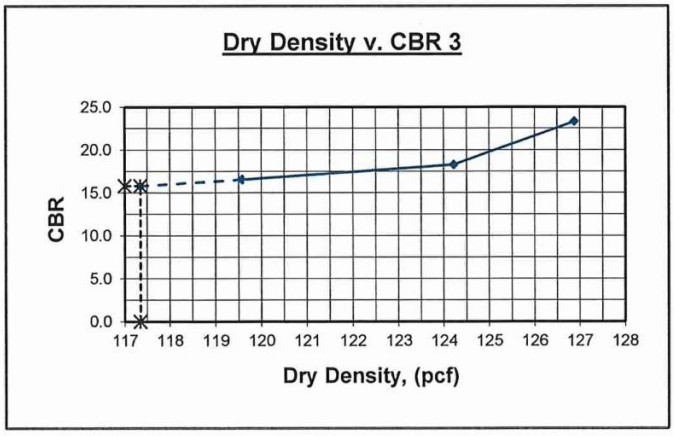

Dry Density @ 56 Blows/lift (pcf) = 123.7

$CBR_{0.100}$ = (137.9 /1000) x 100 = 13.79

$CBR_{0.200}$ = (349.3 /1500) x 100 = 23.29

Use CBR = **23.29**

Design CBR @ 95 % Max. Dry Density = **15.8**

Design CBR @ 100% Max. Dry Density = **23.3**

Midland International Air and Space Port
Midland, Texas
Proctor Chart for CBR Sample No. 4

Laboratory No:	RE23-0241-4	**Compactive Effort:**	ASTM D698-C
Material Type:	Existing Base	**Maximum Density** (pcf):	**125.5**
Sample Location:	Combined Sample of Test Pit 1 & 2	**Optimum Moisture** (%):	**10.3**

Specimen No.	1	2	3	4	5
% Water Added	4.0	6.0	8.0	10.0	--
Net Wt. Of Specimen & Mold (g)	7178.8	7417.8	7380.2	7246.0	--
Tare Wt. Of Mold (g)	2714.8	2714.8	2714.8	2714.8	--
Wet Wt. Of Specimen (lb)	9.841	10.368	10.285	9.989	--
Volume of Specimen (ft^3)	0.0750	0.0750	0.0750	0.0750	--
Wet Density of Specimen (pcf)	131.2	138.2	137.1	133.2	--
Guesstimated Dry Density (pcf)	126.2	130.4	127.0	121.1	--
Wet Wt. Of Specimen & Pan (g)	5748.9	5955.8	5930.2	5695.0	--
Dry Wt. Of Specimen & Pan (g)	5399.3	5519.6	5418.4	5146.8	--
Tare Wt. Of Pan (g)	1281.2	1251.5	1261.6	1197.0	--
Wt. Of Water (g)	349.6	436.2	511.8	548.2	--
Dry Wt. Of Material (g)	4118.1	4268.1	4156.8	3949.8	--
Total % Moisture of Specimen	**8.5**	**10.2**	**12.3**	**13.9**	--
Dry Density of Specimen (pcf)	**120.9**	**125.4**	**122.1**	**117.0**	--

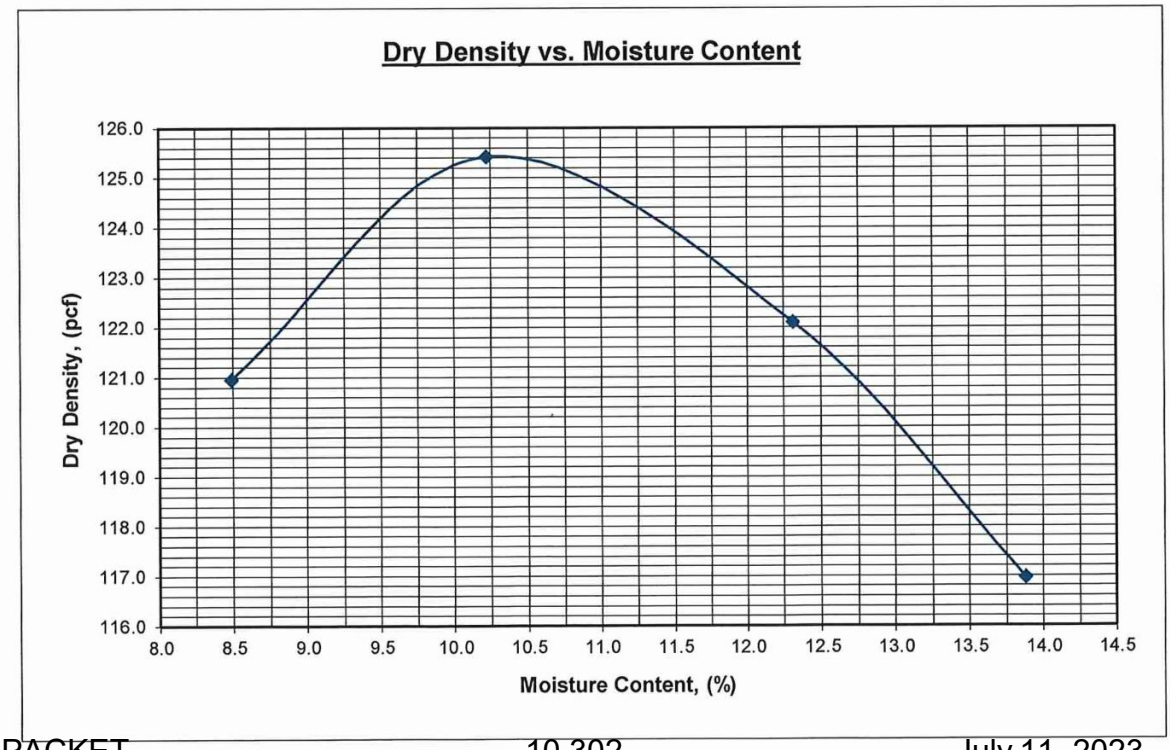

Midland International Air and Space Port
Midland, Texas
Proctor Chart for CBR Sample No. 4

Laboratory No: RE23-0241-4
Material Type: Existing Base
Sample Location: Combined Sample of Test Pit 1 & 2

Compactive Effort: ASTM D698-C
Maximum Density (pcf)**:** 125.5
Optimum Moisture (%)**:** 10.3

Specimen No.	1	2	3
No. of Blows	**10 Blows**	**25 Blows**	**56 Blows**
Net Wt. Of Spec.& Mold (g)	8417.1	8767.7	8927.6
Tare Wt. Of Mold (g)	4203.5	4208.4	4219.0
Wet Wt. Of Specimen (lb)	9.289	10.051	10.381
Volume of Specimen (ft^3)	0.0750	0.0750	0.0750
Wet Density of Spec.(pcf)	123.9	134.0	138.4
Wet Wt. of Spec.& Pan (g)	1959.5	1959.5	1959.5
Dry Wt. Of Spec. & Pan (g)	1859.6	1859.6	1859.6
Tare Wt. Of Pan (g)	915.4	915.4	915.4
Wt. Of Water (g)	99.9	99.9	99.9
Dry Wt. Of Material (g)	944.2	944.2	944.2
Total % Moisture of Spec.	**10.6**	**10.6**	**10.6**
Target % Moisture of Spec.	**10.3**	**10.3**	**10.3**
Dry Density of Spec. (pcf)	**112.0**	**121.2**	**125.2**
Initial Measurement (Div.)	60	60	60
Final Measurement (Div.)	68	68	66
Percentage of Swelling	**0.2**	**0.2**	**0.1**

10 blows/lift

Penetration (in)	Load (lb)	Stress (psi)
0.025	33.0	11.0
0.050	56.2	18.7
0.075	80.9	27.0
0.100	104.9	35.0
0.125	124.9	41.6
0.150	144.5	48.2
0.175	164.9	55.0
0.200	183.4	61.1
0.300	249.8	83.3
0.400	320.9	107.0
0.500	402.9	134.3

25 blows/lift

Penetration (in)	Load (lb)	Stress (psi)
0.025	29.8	9.9
0.050	75.9	25.3
0.075	137.9	46.0
0.100	196.5	65.5
0.125	315.3	105.1
0.150	434.8	144.9
0.175	569.2	189.7
0.200	733.1	244.4
0.300	1544.8	514.9
0.400	2547.3	849.1
0.500	3383.9	1128.0

56 blows/lift

Penetration (in)	Load (lb)	Stress (psi)
0.025	67.1	22.4
0.050	164.1	54.7
0.075	272.4	90.8
0.100	375.6	125.2
0.125	455.7	151.9
0.150	578.0	192.7
0.175	686.0	228.7
0.200	788.6	262.9
0.300	1189.2	396.4
0.400	1593.8	531.3
0.500	2007.6	669.2

Midland International Air and Space Port
Midland, Texas
Proctor Chart for CBR Sample No. 4

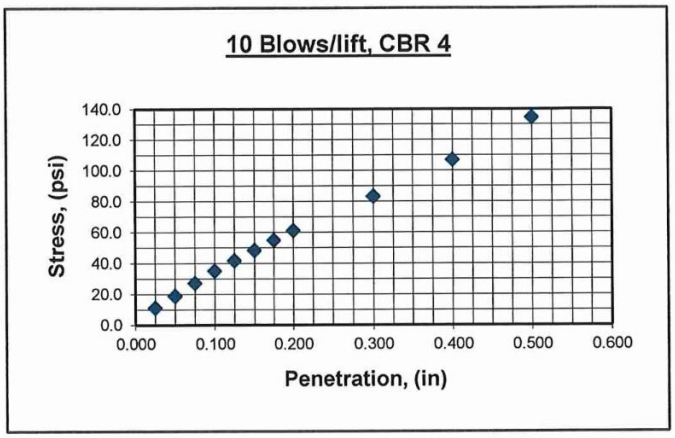

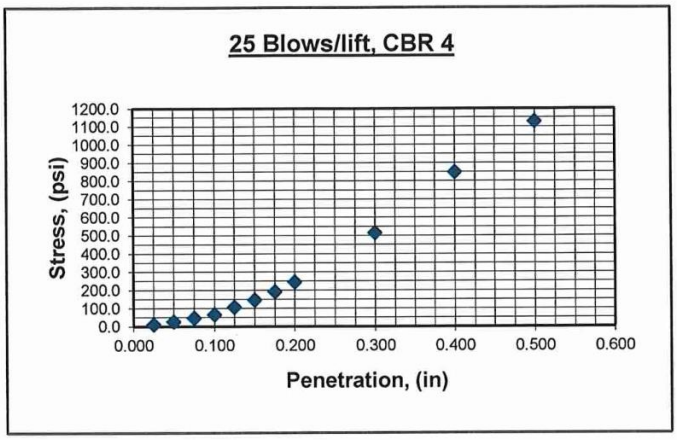

Dry Density @ 10 Blows/lift (pcf) = 112.0

$CBR_{0.100}$ = (35.0 /1000) x 100 = 3.50

$CBR_{0.200}$ = (61.1 /1500) x 100 = 4.08

Use CBR = 4.08

Dry Density @ 25 Blows/lift (pcf) = 121.2

$CBR_{0.100}$ = (65.5 /1000) x 100 = 6.55

$CBR_{0.200}$ = (244.4 /1500) x 100 = 16.29

Use CBR = 16.29

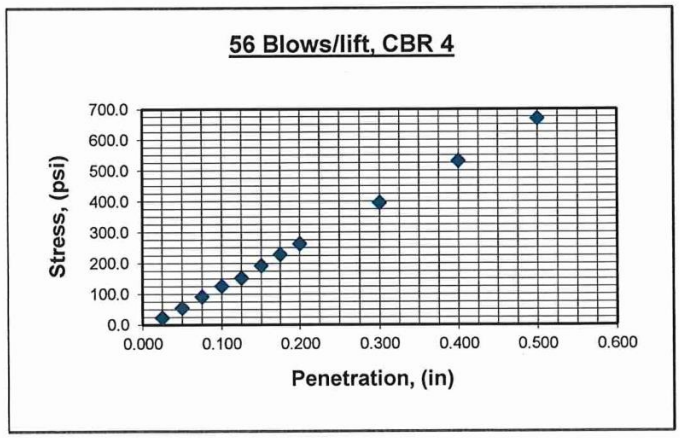

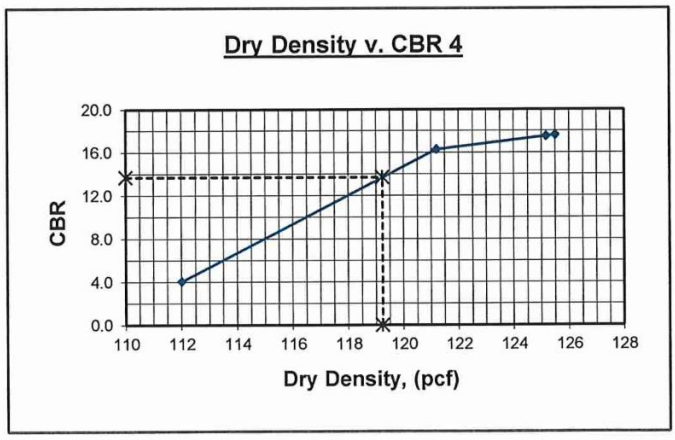

Dry Density @ 56 Blows/lift (pcf) = 125.2

$CBR_{0.100}$ = (125.2 /1000) x 100 = 12.52

$CBR_{0.200}$ = (262.9 /1500) x 100 = 17.52

Use CBR = 17.52

Design CBR @ 95 % Max. Dry Density = 13.7

Design CBR @ 100% Max. Dry Density = 17.6

Appendix C:

University of Texas, Bureau of Economic Geology Map and Map of Borehole Locations

Midland International Air and Space Port
Midland, Texas

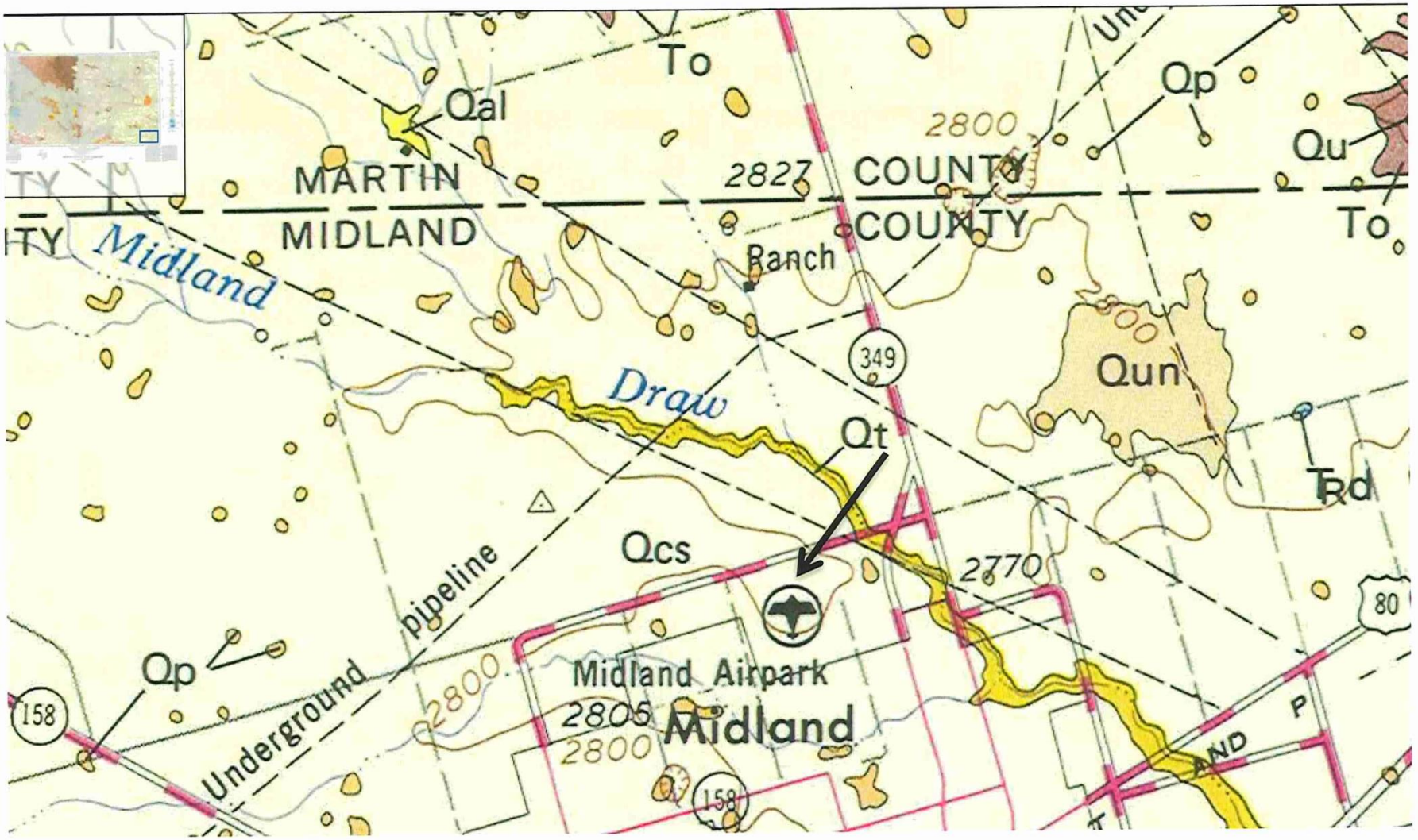

GEOLOGIC ATLAS OF TEXAS, HOBBS SHEET

WILLIAM BATTLE PHILLIPS MEMORIAL EDITION

1976

Qcs
Windblown cover sand

PACKET 10.307 July 11, 2023



Boring No.	Latitude	Longitude
Bore 1	31°56'36.75"N	102°12'36.49"W
Bore 2	31°56'34.72"N	102°12'37.83"W
Bore 3	31°56'32.97"N	102°12'38.18"W
Test Pit 1	31°56'36.70"N	102°12'36.31"W
Test Pit 2	31°56'34.91"N	102°12'38.45"W

Rodriguez Engineering Laboratories LLC	
Midland International Air and Space Port Midland, Texas Bores 1-3 & Test Pits 1-2	
Parkhill	
Date: 2/6/2023	Scale: N/A

Note: All borehole and test pit locations are approximate.

Appendix D:

Stabilization Ability of Lime by pH Method

Determining Stabilization Ability of Lime by the Soil pH Method

Midland International Air and Space Port

Midland, Texas

Sample from CBR #1

Water Content of Air-Dried Sample

Mass of Wet Sample + Tare (g):	0.0
Mass of Dry Sample + Tare (g):	0.0
Tare Mass (g):	0.0
Hygroscopic Moisture Content (%):	0.0

pH Value of Soil-Lime-Water Mixtures

Lime (%)	3	4	5	6	7	8
Soil (g)	30.0	30.0	30.0	30.0	30.0	30.0
Lime (g)	0.9	1.2	1.5	1.8	2.1	2.4
Water (ml)	150	150	150	150	150	150
pH Value	12.4	12.4	12.4	12.4	12.41	12.41

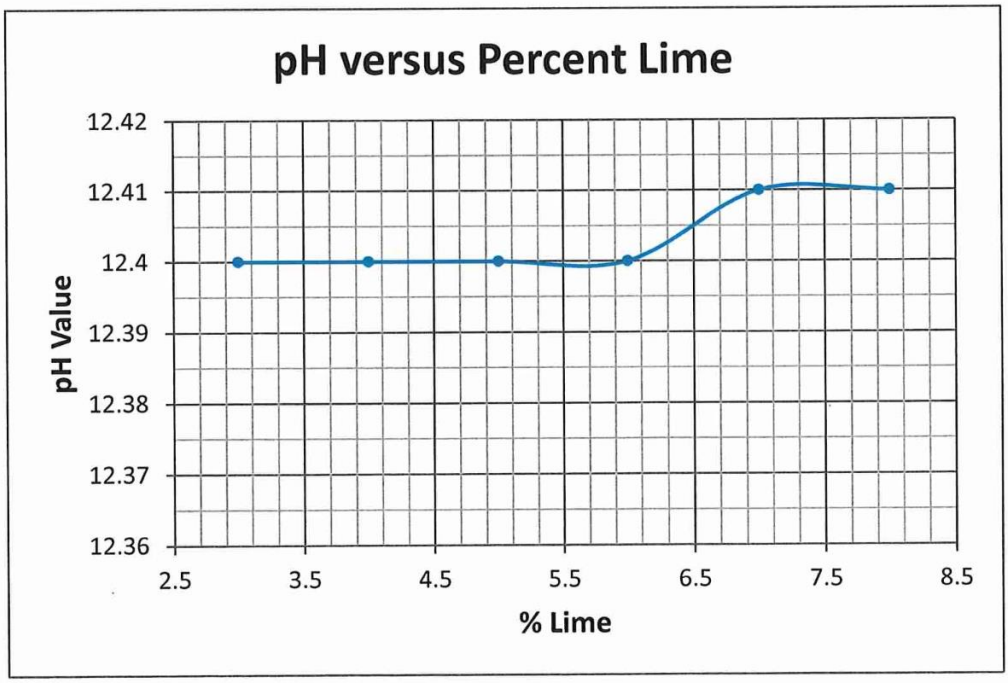

Determining Stabilization Ability of Lime by the Soil pH Method

Midland International Air and Space Port

Midland, Texas

Sample from CBR #2

Water Content of Air-Dried Sample

Mass of Wet Sample + Tare (g):	0.0
Mass of Dry Sample + Tare (g):	0.0
Tare Mass (g):	0.0
Hygroscopic Moisture Content (%):	0.0

pH Value of Soil-Lime-Water Mixtures

Lime (%)	3	4	5	6	7	8
Soil (g)	30.0	30.0	30.0	30.0	30.0	30.0
Lime (g)	0.9	1.2	1.5	1.8	2.1	2.4
Water (ml)	150	150	150	150	150	150
pH Value	12.4	12.41	12.41	12.41	12.41	12.41

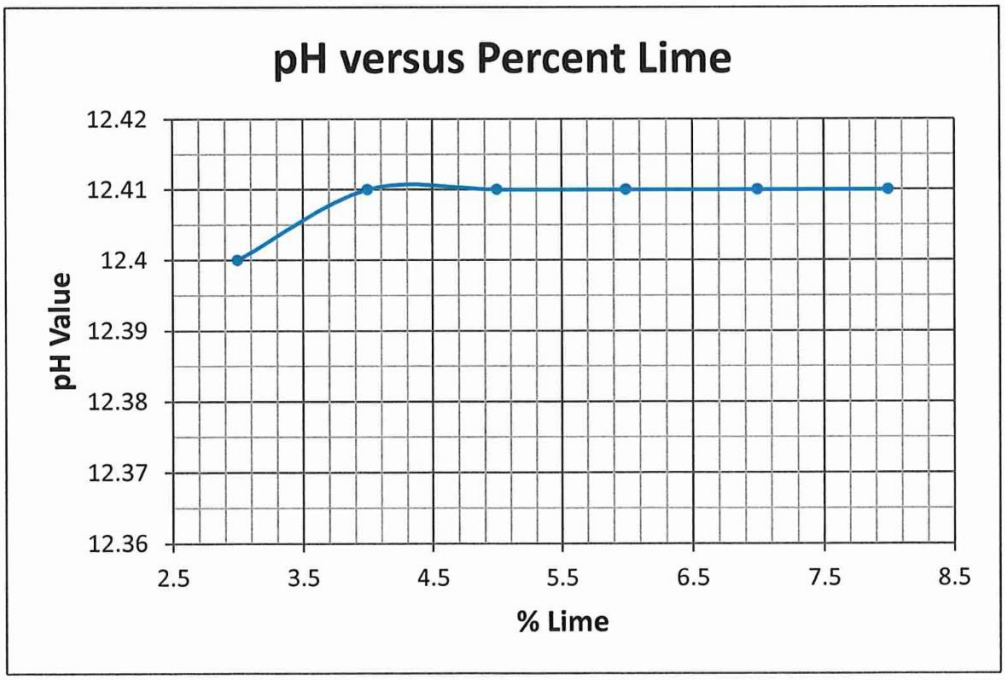

Appendix E:

Core Pictures

Rodriguez Engineering Laboratories, LLC

Midland International Air and Space Port
Appendix E: Core Pictures





Core 1 (Top)
Asphalt = 2-1/2″





Core 1 (Bottom)
Asphalt = 1-1/2″





Core 2
Asphalt = 4-1/8″

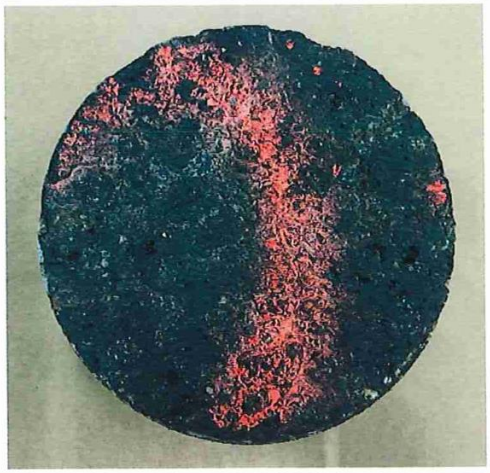



Core 3
Asphalt = 3″

APPENDIX B: CONSTRUCTION MANAGEMENT PLAN (CMP)

APPENDIX C: CONSTRUCTION SAFETY AND PHASING PLAN (CSPP)

Parkhill



CONSTRUCTION SAFETY AND PHASING PLAN (CMP)

Midland International Air & Space Port (MAF)

Taxiway E Reconstruction
Midland, Texas

PACKET 10.317 June | 2023
July 11, 2023
Parkhill Project #01623522

Parkhill

Midland International Air & Space Port

THIS DOCUMENT IS RELEASED FOR THE PURPOSE OF INTERIM REVIEW UNDER THE AUTHORITY OF BIJAN T. JAMALABAD, P.E., LICENSE #88531. IT IS NOT TO BE USED FOR REGULATORY APPROVAL, CONSTRUCTION, BIDDING OR PERMIT PURPOSES.
PARKHILL F-560
06/26/2023

CONSTRUCTION SAFETY AND PHASING PLAN (CMP)

Midland International Air & Space Port (MAF)

Taxiway E Reconstruction
Midland, Texas

PACKET 10.318 June | 2023
July 11, 2023
Parkhill Project #01623522

TABLE OF CONTENTS

1. COORDINATION 1
2. PHASING 2
3. AREAS/OPERATIONS AFFECTED BY CONSTRUCTION 3
4. NAVIGATION AID (NAVAID) PROTECTION 3
5. CONTRACTOR ACCESS 3
6. WILDLIFE MANAGEMENT 5
7. FOREIGN OBJECT DEBRIS (FOD) MANAGEMENT 5
8. HAZARDOUS MATERIALS (HAZMAT) MANAGEMENT 5
9. CONSTRUCTION ACTIVITY NOTIFICATIONS 6
10. INSPECTION REQUIREMENTS 7
11. UNDERGROUND UTILITIES 7
12. PENALTIES 7
13. SPECIAL CONDITIONS 8
14. RUNWAY AND TAXIWAY VISUAL AIDS 8
15. MARKING AND SIGNS 8
16. HAZARD MARKING AND LIGHTING 8
17. WORK ZONE LIGHTING FOR NIGHT CONSTRUCTION 9
18. PROTECTION 9
19. OTHER CONSTRUCTION LIMITATIONS 10

APPENDICES

APPENDIX A: CONSTRUCTION SAFETY AND PHASING PLAN
APPENDIX B: SAFETY DETAILS
APPENDIX C: ADVISORY CIRCULAR 150/5370-2G, OPERATIONAL SAFETY ON AIRPORTS DURING CONSTRUCTION
APPENDIX D: FAA FORM 7460-1, NOTICE OF PROPOSED CONSTRUCTION OR ALTERATION (BLANK)
APPENDIX E: FAA CSPP REVIEW CHECKLIST (PM to complete at final review and before sealing)

Project Name:	MAF Taxiway E Reconstruction
Sponsor's Agent:	Justine Ruff, Director of Airports City of Midland PO Box 60305 Midland Texas 79711 432.560.2200 x3001 Aaron Easton, Deputy Director of Airports City of Midland PO Box 60305 Midland Texas 79711 432.560.2200 x3010
Consultant/Engineer:	Bijan Jamalabad, PE, Project Manager PARKHILL 11902 Burnet Road Suite 100 Austin Texas 78758 512.676.2112 Michael Krusing, PE, Project Engineer Parkhill 4222 85th St Lubbock Texas 79423 806.432.3671
Grant/Project Numbers:	FAA AIP No.:
Engineer's Project No.:	01623522

1. COORDINATION

A. PROJECT MEETINGS

Predesign Conference. Items discussed included Project scope, phasing, design, schedule, survey, unique Project elements/areas of potential concern, and utilities. Attendees included Midland International Air & Space Port (MAF) and Parkhill personnel.

Prebid Conference will be held In accordance with FAA AC 150/5300-12B, Prebid Conference will be held for Consulting Engineer, City of Midland, MAF, and FAA to go over Project details and allow contractors to ask Project-specific questions. Prebid conference will be led by City of Midland with assistance from Parkhill.

Preconstruction Meeting will be held before issuance of the Notice to Proceed (NTP) in accordance with FAA AC 150/5370-12B. At minimum, required attendees will be Director of Airports, Consulting Engineer, Resident Project Representative (RPR), Prime Contractor, and all subcontractors.

Construction Progress Meetings will be held throughout Project duration, typically at monthly intervals. At minimum, required attendees will be Airport administrative staff, Consulting Engineer, RPR, Prime Contractor and all subcontractors performing work during the current period. Construction phasing and safety will be a standing item at all construction progress meetings. Other ongoing agenda items will include:

- Project Schedule
- Safety/Security
- Project Coordination
- Construction Issues
- Submittals Review
- Request for Information (RFI) Review
- Change Orders Review
- Environmental Issues
- Quality Assurance (Test Reports)
- Record Drawings
- Pay Application Review
- General Discussion

Consulting Engineer will prepare and distribute meeting minutes for all meetings.

B. SCOPE

Project accomplished under this program includes reconstruction of existing asphalt taxiway, installation of new drainage pipe headwalls, and overall drainage improvements including concrete drainage flumes, and relocation of existing taxiway guidance sign.

Any changes in Project Scope will require a revision to the CSPP, which must be approved by MAF and FAA.

C. FAA AIR TRAFFIC CONTROL TOWER (ATCT) COORDINATION

At MAF, Contractor does not communicate directly with ATCT; therefore, coordinate all communication with MAF Operations, Consulting Engineer, and/or FAA.

2. PHASING

Refer to Phasing Plans included in Appendix A for limits of each phase.

A. BID PACKAGE (100 CALENDAR DAYS TOTAL)

- Phase 1 (60 Calendar Days): TWY A remains active during this phase. Work includes:
  - No aircraft access to hangar, apron, and taxilane.
  - Protecting existing apron pavement edge to remain.
  - Installing low-profile barricades and other safety measures as shown on details.
  - Demolishing/stockpiling existing asphalt taxiway and apron to be reused.
  - Demolishing taxiway edge lights and taxiway signage/foundation.
  - Removing/stockpiling unpaved area for TWY E construction to TWY A safety area.
  - Constructing Phase 1 pavement to top of base course including removing existing drainage pipe and extending new 42- and 27-inch drainage pipes and safety end treatments.
  - Completing grading along Phase 1 pavement limit.
- Phase 2 (30 Calendar Days): TWY A remains closed during this phase. Work to include:
  - Installing closed taxiway Xs on TWY A.
  - Installing low-profile barricades and other safety measures as shown on plan details.
  - Demolish and stockpile existing asphalt taxiway, taxiway edge lights, and taxiway signs/foundation inside TWY A safety area.

- Removing/stockpiling paved area for TWY E construction within TWY A safety area.
- Always allowing aircraft access to hangar and apron using alternate route through TWY T.
- Completing all electrical work except fixture installation.
- Preparing apron and taxiway pavement limit for constructing hot-mix asphalt course (Item P-401).
- NOTE: Contractor may start hot mix asphalt (Item P-401) operation during this phase.

- Punch List (10 Calendar Days).
- Construction Phasing Drawings may be reviewed in Appendix A.

B. PROJECT SCHEDULE

Contractor must submit a Project Schedule and Phasing Plan at/before the preconstruction meeting. Any changes made to Project Schedule or Phasing will require a revision to the CSPP, which must be approved by MAF and FAA.

3. AREAS/OPERATIONS AFFECTED BY CONSTRUCTION

Construction will be completed within these protected areas:

Table 3.1 – OPERATIONS AFFECTED BY CONSTRUCTION ACTIVITY

Taxiway	ADG	TSA Width (ft)	TOFA Width (ft)
16R-34L	C-IV	500	800
TWY A	3	118	171

4. NAVIGATION AID (NAVAID) PROTECTION

A. NAVAIDS IN CLOSE PROXIMITY TO WORK AREA

No NAVAIDs are near work area; therefore, no physical impact to any NAVAIDs is anticipated.

5. CONTRACTOR ACCESS

A. GENERAL

MAF to provide Airport visitor/contractor access procedures.

B. AIRPORT OPERATIONS AREA (AOA)

Airport Operations Area (AOA) is defined as any portion of Airport property normally secured against unauthorized entry. AOA includes all areas specifically reserved for operations of aircraft, aircraft support equipment, and personnel. Generally, AOA is defined by the Airport's outer security fencing and any building forming part of secured perimeter. When necessary to cross pavement surface on airfield, Contractor shall inspect all paved surfaces for Foreign Object Debris (FOD) daily and before reopening pavement surface to air traffic. Final inspection shall be by MAF. Contractor shall not leave opening in secure fence at any time.

C. CONTRACTOR'S ENTRANCE GATE

Adjacent to Contractor's entrance gate and outside AOA, Contractor shall provide a parking area for Contractor employees' personal automobiles. Engineer directs limits of parking/storage area. At Project completion, any damage done by Contractor to this area shall be repaired to Engineer

satisfaction at no additional cost to Owner. Repairs shall include but not be limited to regrading, reseeding, or repaving damaged areas.

D. CONTRACTOR'S PLANT SITE, STORAGE, AND OFFICE AREA

Contractor will be held completely responsible for any damage or deterioration in areas allowed for Contractor use. Contractor is also responsible for maintenance and dust control for project duration.

Direct negotiation may be conducted with the Director of Airports for any areas desired. Areas used by the Contractor may be subject to rental rates and fees as dust control for project duration.

Contractor shall completely restore, at own expense, areas Contractor and forces occupy including but not limited to regarding disturbed areas, complete removal of debris or any other material Contractor brings onto site, as well as complete replacement of topsoil, turf, asphalt pavement, concrete slabs or drives, etc. worn, deteriorated, or damaged while Contractor and forces occupied the area. All restoration shall be to the Director of Airport's satisfaction.

Prior to moving into an unpaved area, Contractor shall clear and grub as well as remove and stockpile a 6-inch minimum of existing topsoil. After Project completion and clearing site of materials, equipment, and debris, Contractor shall replace, spread, and grade salvaged topsoil followed by seeding and fertilizing.

All restoration activities shall be accomplished in accordance with applicable Technical Specifications.

No direct payment will be made to the Contractor for prepping or restoring plant site haul routes, storage, or office areas.

For all projects with an onsite concrete or hot-mix asphalt batch plant as well as those involving pug-mill produced material, a concrete or asphalt paved material stockpile area is required. Stockpile all materials to incorporate into concrete, hot-mix, cement-treated base (CTB), or other similar material on a specially prepared concrete or asphalt pad so stockpile contamination does not occur. Stockpile area shall be restored to pre-Project conditions.

E. VEHICLE ESCORT

All vehicles responsible to Contractor entering the AOA such as supplier vehicles, shall be escorted by an approved Contractor escort vehicle from point of AOA entry to construction site. The escort vehicle shall be clearly identified with standard FAA specified markings/flags and marked with Contractor name.

To facilitate safe movement of escort vehicle and escorted vehicles, driver of escort vehicle shall be approved for, issued, and display an MAF Operations security badge. Further, escort vehicle driver shall be familiar with MAF security and safety procedures. When required to cross active airfield runways, taxiways, or aprons, an MAF escort will be required.

F. TWO-WAY RADIO COMMUNICATIONS

MAF does not permit Contractor from contacting ATCT; therefore, Contractor will not be required to have two-way radios. Communication will be through MAF Operations staff.

G. CONTRACTOR'S SAFETY PLAN (CSP)

Contractor shall submit a Contractor's Safety Plan (CSP) as part of the submittal process before starting construction that must always be followed. MAF reserves the right to have Contractor amend CSP any time if concerns arise.

6. WILDLIFE MANAGEMENT

A. TRASH

Contractor must dispose all trash in a covered trash can or other method, not allowing trash to become a hazard or animal attractant.

B. STANDING WATER

Contractor shall minimize standing water.

C. TALL GRASS AND SEEDS

Contractor must maintain construction area grass to height required by MAF.

D. POORLY MAINTAINED FENCING AND GATES

Contractor shall maintain any fencing or gates in good condition, proper working order, and gap under fence or gate shall not exceed 3 inches.

E. DISRUPTION OF EXISTING WILDLIFE HABITAT

In event of wildlife habitat, Contractor will notify MAF and Engineer immediately.

7. FOREIGN OBJECT DEBRIS (FOD) MANAGEMENT

Contractor shall train and emphasize to construction site employees the need for continuous Foreign Object Debris (FOD) checks on or near active airfield pavement.

Contractor must conduct FOD checks before and after each construction shift at a minimum and monitor nearby active pavements throughout construction shift.

8. HAZARDOUS MATERIALS (HAZMAT) MANAGEMENT

Hazardous materials will be handled and stored per latest revision to FAA Advisory Circular 150/5370-2G - Operational Safety on Airports during Construction. Contractor must be prepared to immediately contain and clean spills resulting from fuel, oil, petroleum products, or hydraulic fluid leaks. Transportation and handling of other hazardous materials on the Airport requires additional special procedures as addressed in latest revisions to FAA Advisory Circular 150/5320-15 - Management of Airport Industrial Waste. All spills must be immediately reported to MAF at 432.560.2200 x3010.

9. CONSTRUCTION ACTIVITY NOTIFICATIONS

A. RESPONSIBLE REPRESENTATIVES / POINTS OF CONTACT

Midland International Air & Space Port (MAF)

Name	Position	Phone
Aaron Easton	Deputy Director of Airports	432.560.2200 x3010
Nick Krakovec	Airport Operations Supervisor	432.560.2200

Parkhill, Engineer/Consultant

Name	Position	Phone
Danny Winchester, P.E.	Client Manager	432.697.1447
Michael Krusing, P.E.	Project Manager	806.473.3671
Bijan Jamalabad, P.E.	Project Engineer	512.676.2112

Parkhill, Resident Engineer

Name	Position	Phone
Nathan Morrow	RPR	806.438.6847

_____TBD_____, Quality Assurance Testing

Name	Position	Phone

***** Insert Contractor and subcontractor personnel information upon Project award. *****

_____, Contractor

Name	Position/Trade	Phone

_____, Subcontractor

Name	Position/Trade	Phone

_____, Subcontractor

Name	Position/Trade	Phone

B. NOTICES TO AIRMEN (NOTAM)

- During airport emergencies, all ARFF vehicles always have the immediate right-of-way and may traverse any and all known roadways throughout airfield. Contractor, subcontractors, and suppliers shall immediately yield right-of-way to all Airport ARFF personnel and equipment.
- Owner and Engineer shall be notified in writing at least 72 hours in advance if water lines or fire hydrants are out of service. 72-hour advance notification shall also be provided prior to performing any work that may close or affect an emergency rescue and firefighting route.
- MAF Administration/Operations will communicate with MAF ARFF as needed to ensure MAF ARFF remain aware of construction activities.

C. EMERGENCY NOTIFICATION PROCEDURES

In case of emergency, Contractor shall immediately call 911 first then MAF Operations, then Engineer.

D. FAA NOTIFICATION

Contractor will notify Consulting Engineer and MAF 72 hours in advance of any workaround NAVAIDs or shutdowns affecting NAVAIDs owned by FAA. Contractor shall notify NAVAIDs owned by a separate party 72 hours in advance of any work around or shutdowns of NAVAIDs.

10. INSPECTION REQUIREMENTS

A. DAILY INSPECTIONS

Contractor shall perform daily safety, security, and phasing inspections to ensure CSPP compliance. Document inspections in Contractor's Daily Logs/Quality Control Logs.

Contractor is required to submit a Quality Control Plan (QCP) for Owner or designated representative review before any construction. QCP will address specific requirements for inspection of individual specification/pay items including test method, sampling point, testing frequency for each item, and proposed remediation action for each item if it does not meet Specification requirements. QCP will also provide direction on developing inspection reports and what to include. QCP will likely be developed in whole or in conjunction with selected Quality Control firm. QCP shall include and address Construction Management Plan (CMP) requirement.

B. FINAL INSPECTIONS

MAF will perform final safety inspection before opening any airfield pavement to aircraft.

11. UNDERGROUND UTILITIES

Contractor shall locate, mark, and protect all utilities and infrastructure during construction. Location of utilities shall include notification of Texas One Call system, as well as coordination with MAF.

12. PENALTIES

Contractor pays all penalty fines associated with any safety violation.

13. SPECIAL CONDITIONS

A. FAA FORM 7460-1

- Consulting Engineer will prepare and submit FAA Form 7460-1 for Project scope and proposed Construction Safety and Phasing Plan (CSPP).
- Contractor shall submit Form 7460-1 on all equipment over 20 feet high.
- A blank Form 7460-1 - Notice of Proposed Construction or Alteration, is included in Appendix D. Contractor shall submit supplemental FAA Form 7460-1 to FAA at least 45 days prior to utilization of equipment in excess of 20 feet in height.

B. ONSITE BURNING AND BLASTING

Onsite burning and blasting are prohibited.

C. GUN PROHIBITION ON AIRPORT PROPERTY

No firearms or guns are allowed on MAF property.

14. RUNWAY AND TAXIWAY VISUAL AIDS

Airport marking, lighting, signs, and visual NAVAIDs must be clearly visible to pilots, not misleading, confusing, or deceptive. All must be secured in place to prevent movement by prop wash, jet blast, wing vortices, or other wind currents and constructed of materials to minimize damage to an aircraft in the event of inadvertent contact.

Lighting, signs, and NAVAIDs located within object-free area must be frangible.

15. MARKING AND SIGNS

A. ACCESS ROUTE

Contractor required to mark access routes and haul routes with lathes and flag tape.

B. APPROVED WORK AREAS

Contractor must mark approved work areas with lathes and flag tape to ensure construction personnel and equipment remain in approved areas.

16. HAZARD MARKING AND LIGHTING

A. EQUIPMENT

- Contractor vehicles shall be clearly identified with Contractor name, standard FAA marking, lighting, and/or flags. Rotating amber beacons are required for all nighttime work.
- Contractor shall submit 7460s on all equipment over 20 feet in height.
- Any request to use nighttime lighting will be provided in writing two weeks prior to requested start time, from Contractor to Engineer and MAF for approval.

B. WORK AREAS

- Contractor shall provide temporary, low-profile barricades to delineate safe operating areas for aircrafts.
- Barricades shall have flashing red lights.
- Contractor must inspect lights each evening and immediately replace any lights not operating correctly.
- Contractor will be fined for non-working lights as indicated in Project Specifications.
- Line perimeter construction area with low-profile aviation barricades spaced at 5 feet.

17. WORK ZONE LIGHTING FOR NIGHT CONSTRUCTION

If accomplishing work at night, Contractor-provided lighting equipment must adequately illuminate work area. Present a Lighting Plan to MAF, Engineer, and FAA at least 28 days before commencing nighttime construction activities. Requirement for Lighting Plan are stated in Section 3.22 of FAA AC 150/5370-2G.

18. PROTECTION

A. RUNWAY SAFETY AREA (RSA)

No construction or material stockpile shall occur within an active RSA. Contractor shall mark out RSA before construction. RSA is 500 feet wide and extends 1,000 feet beyond runway end for RWYs 16R-34L and 10-28. RSA is 150 feet wide and extends 300 feet beyond runway end for RWY 16L-34R. RSA is 120 feet wide and extends 240 feet beyond runway end for RWY 4-22.

B. RUNWAY OBJECT FREE AREA (ROFA)

No material stockpile will occur within an active ROFA. ROFA is 800 feet wide and 1,000 feet beyond runway end for RWYs 16R-34L and 10 28. ROFA is 500 feet wide and 300 feet beyond runway end for RWY 16L-34R. ROFA is 400 feet wide and 240 feet beyond runway end for RWY 4-22.

C. TAXIWAY SAFETY AREA (TSA)

No construction or material stockpile shall occur within an active TSA. TSA is 118 feet wide.

D. TAXIWAY OBJECT FREE AREA (TOFA)

No material stockpile shall occur within an active TOFA. TOFA is 171 feet wide.

E. OBSTACLE FREE ZONE (OFZ)

No construction activity or material stockpile will penetrate OFZ.

F. RUNWAY APPROACH/DEPARTURE SURFACES

No construction activities will penetrate approach/departure surfaces.

G. OPEN TRENCHES

Open trenches are not permitted within RSA of an open runway or TSA of an open taxiway. Contractor shall prominently mark any open trench or excavation at construction site with lighted barricades.

H. SAFETY INFORMATION

Refer to Appendix B - Safety Details, for safety information.

I. JET BLAST

Contractor shall take precautions to minimize effects of jet blast, particularly in areas near runway threshold.

J. ELECTRICAL LOCK OUT/TAG OUT REQUIREMENTS

Contractor shall prepare lockout/tag out plan and communicate procedures to all staff.

K. UNUSED RUNWAY

Where shown on Construction/Safety Plan, Contractor shall denote unusable runway pavement using low-profile aviation barricades. Refer to Plans for details.

19. OTHER CONSTRUCTION LIMITATIONS

A. PROHIBITIONS

- No use of tall equipment over 20 feet unless a 7460-1 determination letter is issued for such equipment.
- No use of open-flame welding or torches.
- No use of electrical blasting caps.
- No use of flare pots.

B. RESTRICTIONS

- Any construction suspension required during specific airport operations will be coordinated by Engineer, Owner, and Contractor during construction.
- Areas that cannot be worked on simultaneously will be coordinated by Engineer, Owner, and Contractor during construction.
- Refer to Article 16 – Hazard Marking and Lighting, for night construction requirements.
- Seasonal construction restrictions will be coordinated by Engineer, Owner, and Contractor during construction.

APPENDIX A: CONSTRUCTION SAFETY AND PHASING PLAN

Parkhill



CONSTRUCTION MANAGEMENT PLAN (CMP)

Midland International Air & Space Port (MAF)

Taxiway E Reconstruction
Midland, Texas

PACKET 10.331 July 11, 2023

June | 2023
Parkhill Project #01623522

Parkhill

Midland International Air & Space Port

THIS DOCUMENT IS RELEASED FOR THE PURPOSE OF INTERIM REVIEW UNDER THE AUTHORITY OF BIJAN T. JAMALABAD, P.E., LICENSE #88531. IT IS NOT TO BE USED FOR REGULATORY APPROVAL, CONSTRUCTION, BIDDING OR PERMIT PURPOSES.
PARKHILL F-560
06/26/2023

CONSTRUCTION MANAGEMENT PLAN (CMP)

Midland International Air & Space Port (MAF)

Taxiway E Reconstruction
Midland, Texas

PACKET 10.332 June | 2023
July 11, 2023
Parkhill Project #01623522

TABLE OF CONTENTS

A. INTRODUCTION 1
B. PERSONNEL 1
C. INSPECTION PROCEDURES AND FREQUENCIES 3
D. SUBMITTAL PROCESS 3
E. QUALITY CONTROL TESTING (BY CONTRACTOR) 4
F. ACCEPTANCE TESTING (BY OWNER'S REPRESENTATIVE) 4
G. PAY FACTORS 5
H. TEST RESULTS 5
I. . FINAL TEST AND QUALITY CONTROL REPORT 5

APPENDICES

APPENDIX A: CONSULTING ENGINEERING STAFF RESUMES
APPENDIX B: LABORATORY CERTIFICATION
APPENDIX C: SUBMITTAL PROCESS SUMMARY
APPENDIX D: QUALITY CONTROL TESTING (BY CONTRACTOR)
APPENDIX E: ACCEPTANCE TESTING/QUALITY ASSURANCE (BY ENGINEER)
APPENDIX F: PAY FACTORS

A. INTRODUCTION

The Project accomplished under this program consists of reconstruction of Taxiway E, reconstruction of apron, and drainage improvements at the Midland International Air & Space Port (MAF).

B. PERSONNEL AND RESPONSIBILITIES

- Sponsor

  Ms. Justine Ruff, Director of Airports
  City of Midland
  PO Box 60305
  Midland Texas 79711
  432.560.2200 x3010
  jruff@midlandtexas.gov

  Federal Aviation Administration
  Michael Van Vliet, Project Manager
  FAA ADO- Southwest Region
  Texas Airports Development Office ASW-650
  10101 Hillwood Parkway
  Fort Worth Texas 76177
  817.222.5132
  Michael.e.van.vliet@faa.gov

- Consulting Engineer and Staff

  Michael Krusing, PE, Project Manager
  Parkhill
  4222 85th Street
  Lubbock Texas 79423
  806.473.3671
  mkrusing@Parkhill.com

  Bijan Jamalabad, PE, Project Engineer
  Parkhill
  11902 Burnet Road
  Austin Texas 78758
  512.676.2112
  bjamalabad@Parkhill.com

  Debbie German, Project Coordinator
  Parkhill
  4222 85th Street
  Lubbock Texas 79423
  806.473.3615
  dagerman@Parkhill.com

- Project Manager/Engineer will oversee construction phase services. Parkhill will also provide one, full-time Resident Project Representative (RPR) during Project construction. A second RPR will be provided if needed. RPR duties, responsibilities, and limitations of authority are described in the Professional Engineering Services Agreement. RPR will report directly to Parkhill Project Manager. Parkhill will compile a copy of all test reports to be delivered to TxDOT Aviation. Key personnel and chain of communication are described here:

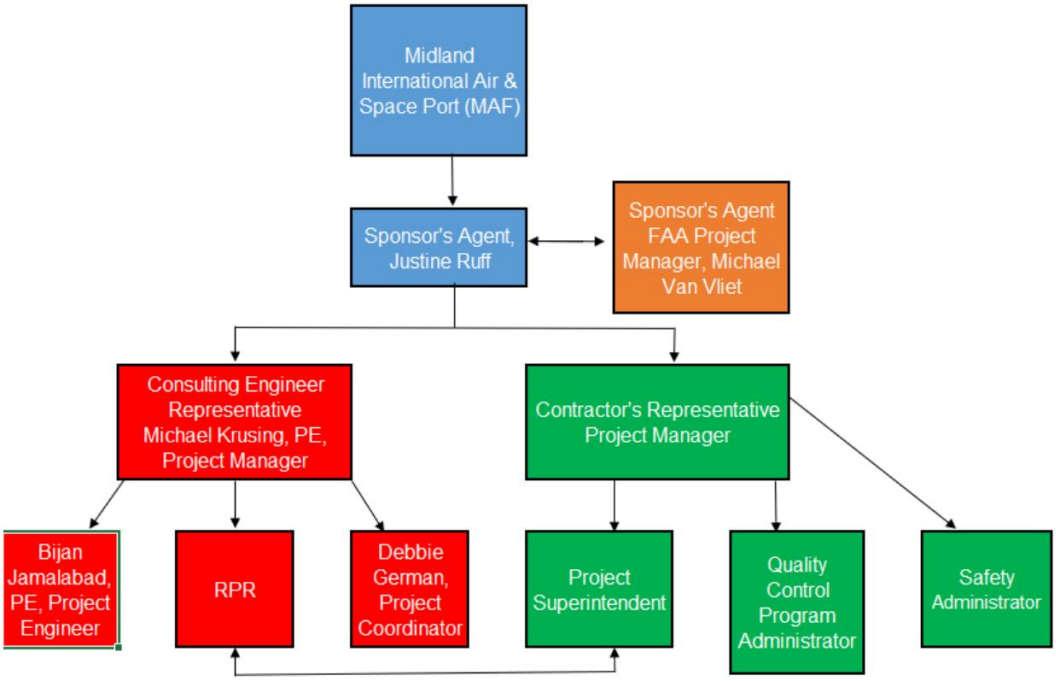

- Contractor (Updated upon award)
  Firm: _____
  Address: _____
  Phone: _____
  Contact Name, Title: _____
  City State Zip: _____
  Email: _____
- Testing Lab(s) (TBD)
  - Sponsor's Quality Assurance Testing Lab
    [Testing Lab]
    [Contact Name, Title]
    [Address]
    [City State Zip]
    [Phone]
    [Email]
  - Contractor's Quality Control Testing Lab (TBD)
    [Testing Lab]
    [Contact Name, Title]
    [Address]
    [City State Zip]
    [Phone]
    [Email]

As required, Sponsor's Quality Assurance (QA) testing laboratory and Contractor's Quality Control (QC) testing laboratory must be certified according to ASTM D3666 and C1077. Laboratory certificates may be found in Appendix B. Sponsor's QA laboratory is responsible for reporting all construction period and material-compliant test results to Contractor, Sponsor, FAA, and Engineer. Contractor's QC laboratory is responsible for testing and reporting quality control test reports and periodic inspections to ensure quality of material required by Project Technical Specifications.

C. INSPECTION PROCEDURES AND FREQUENCIES

1. SURVEYING AND GRADE CONTROL.

- Engineer provides grade control as part of Construction Documents. Contractor is responsible for verifying control network at Project onset to confirm agreement. All construction staking is Contractor responsibility and Contractor is required to immediately report any deviations. As required by Technical Specifications, Contractor must employ a Texas licensed RPLS to verify field condition of various construction items. Provide all survey notes and measure to Engineer for verification of compliance with Project design. Engineer may employ a Texas-licensed RPLS to perform periodic verification of Contractor work, where applicable. This will include isolated spot checks only. Any discrepancies found will result in an immediate coordination meeting between Engineer and Contractor.

2. BY CONTRACTOR.

- Contractor is required to execute daily inspections on work performed and to be performed. All inspection notes shall be captured in Contractor's daily log, submitted as required. Contractor must also perform certain QC testing, where applicable. Testing shall be performed by Contractor's lab and all test reports made available to Engineer daily. Frequencies are defined in Project Specifications and Article E – Quality Control Testing (by Contractor). Contractor will detail QC testing further in their QC Program required by FAA Item C-100 – Contractor Quality Control Program.

3. BY CONSULTING ENGINEER.

- Observation Procedures: RPR will be onsite full-time daily throughout Project duration. As per Agreement for Professional Services, RPR will check for "general conformance to plans and specifications." RPR will not "inspect" every detail of Contractor's Project nor direct Contractor operations. RPR will observe, document findings, and bring any concerns to Parkhill project manager. RPR will also coordinate Owner's QA testing laboratory. Tests will be performed as required by Technical Specifications and as stated in Article F – Acceptance Testing (by Owner's Representative). RPR will also monitor daily activity to confirm Contractor performs required QC testing. Observation notes will be captured in Procore.
- Daily Reporting/Diary: RPR will maintain daily logs [in Procore] for activity, progress, concerns, communication, testing, and other activity related to construction. Submit logs to Sponsor and FAA as part of Project Final Report, if applicable. RPR will also collect photos for reference where appropriate. Include all photos in Procore and transmit as part of the Project Final Report.
- Weekly Reporting: As required by FAA, Parkhill will prepare and submit weekly Construction Progress Reports by email and upload into FAA submission entry with electronic copies to Sponsor.

D. SUBMITTAL PROCESS

- Contractor must prepare and submit a complete submittal list at Preconstruction Meeting to populate into Procore and maintain throughout Project duration. Engineer will also maintain a record of submittal status in Procore. All submittals shall address "Buy American" and FAA-approved source requirements by having Contractor submit a written certification statement indicating requirements are met.
- A preliminary list of submittals may be found in Appendix C. This list was prepared to assist Contractor and does not permit Contractor to omit a submittal if not included on list.
- All submittals will be routed through Procore for review and approval.

E. QUALITY CONTROL TESTING (BY CONTRACTOR)

- Contractor must visually inspect all items used upon arrival and maintain control charts for applicable material production. Contractor shall perform and document all daily inspections and tests as determined in the Technical Specifications, FAA Item C-100 – Contractor Quality Control Program. Contractor shall make QC reports, test results, and inspection reports available to Engineer. Provide test results before start of the following day. Provide inspection reports on workday after day of record. All items of material and equipment are subject to Engineer surveillance. If Contractor determines to be noncompliant regarding any requirements of QC Program, Engineer may expect Contractor to:
  - replace ineffective or unqualified quality control personnel or subcontractors; or
  - stop operations until appropriate corrective action is taken.
- For a list of anticipated QC Tests, see Appendix D, Table 2 - Quality Control Testing (By Contractor). Test values are included in Project Specifications.
- Quality Control Testing Responsibility

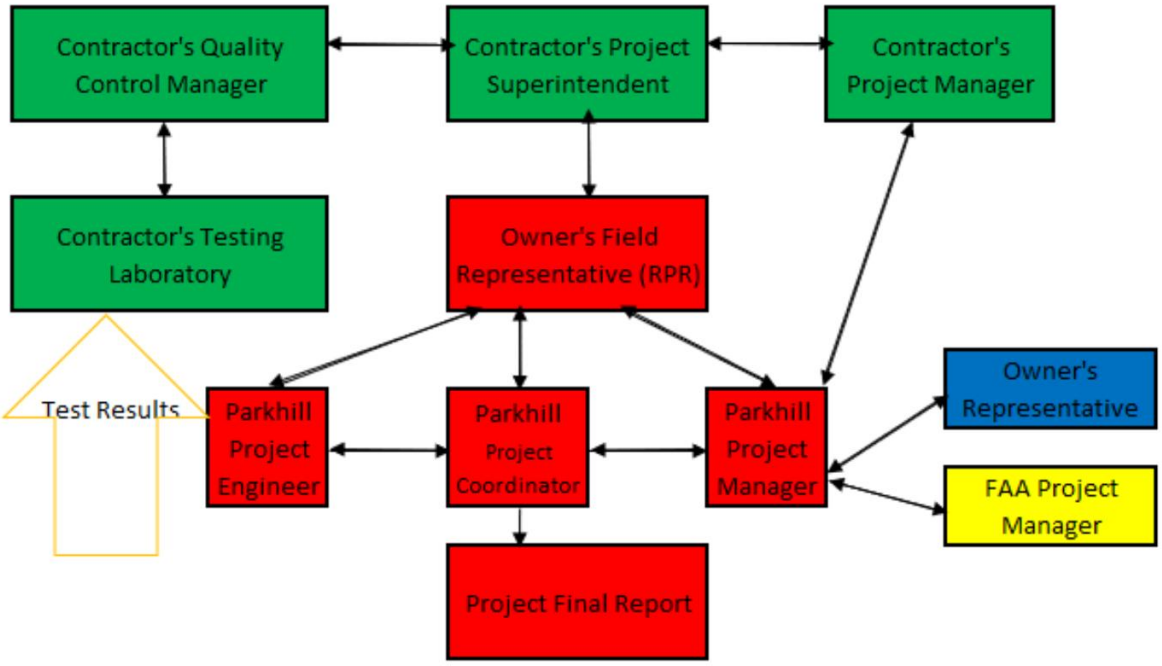

- Summary of Action: If/when deficiencies arise during construction, instigate immediate communication as indicated. Action includes but not limited to:
  - Discussion of test results and potential implications.
  - Retest by Contractor to verify results.
  - If retest confirms deficiency, Contractor shall rework deficiency or potentially replace material depending on deficiency.
  - Reworked area or replaced material tested by Contractor's laboratory.
  - Contractor shall develop a plan for avoiding same deficiency on future segments of work.
  - Other specific courses of action defined in Contractor's QC Plan.

F. ACCEPTANCE TESTING (BY OWNER'S REPRESENTATIVE)

- For Testing Methods, see Appendix E, Table 3 - Quality Assurance (by Engineer).
- Quality Assurance Testing Responsibility:

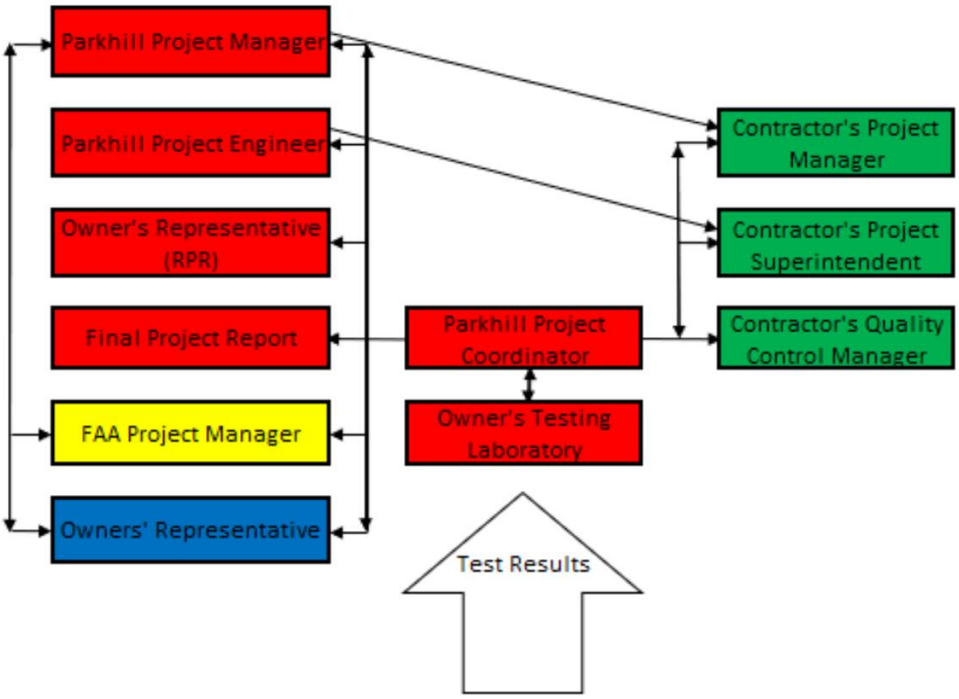

G. PAY FACTORS

Pay Factors will be calculated on a per lot basis for construction of P-401. Basis of payment may be found in Technical Specifications.

H. TEST RESULTS AND DOCUMENTATION

- Daily Quality Control (QC) Tests: Contractor must document all QC test results performed on Project. Submit test results to RPR for review the day after testing is performed. If results are deficient, RPR will initiate dialogue with Contractor's Superintendent. If results are favorable, RPR will forward results to Parkhill Project Assistant to be compiled for Project Final Report.
- Daily Quality Acceptance (QA) Tests: RPR will coordinate testing with Owner's Laboratory. RPR will also document all test results at point of testing, using this data to reconcile test reports received from Owner's Testing Laboratory. RPR will also note tests performed in Procore. Deficient test results will be immediately communicated to Contractor's Project Superintendent.
- Failing Tests:
  - QC Testing: Whether passing or failing, RPR will obtain a copy of all QC test results performed by Contractor. Deficient results will result in immediate communication between Contractor and Engineer and subsequent action determined. Corresponding retests will be taken and documented.
  - QA Testing: RPR will document all test results as point test is performed by Owner's Testing Laboratory. Deficient results will result in immediate communication between Contractor and Engineer and an action plan for remediation developed. Retest results will be documented and all charges for failing tests invoiced to Contractor.

I. FINAL TEST AND QUALITY CONTROL REPORT

As part of the Project Final Report, Engineer, Contractor, and Owner's Testing Laboratory will coordinate preparation of a Final Test and Quality Control Report. Report will summarize number of tests performed versus number of tests required for each specification item. Failed tests and subsequent retests will be included. Where necessary, document acceptance of specification deficiencies.

APPENDIX A: CONSULTING ENGINEER STAFF RESUMES



Bijan Jamalabad, PE

Civil Engineer

Bijan Jamalabad joined Parkhill after spending 25 years with TxDOT Aviation Division. He led more than 275 General Aviation projects as the Director of Engineering and Project Management while at TxDOT Aviation in the last seven years. Bijan has over 32 years of aviation engineering and project management experience overseeing aviation project activities from planning and development phase through construction and a successful completion. He has extensive experience with airfield paving design, pavement maintenance and rehabilitation strategies, drainage, grading, airport lighting, NAVAIDs, construction, and project administration. Bijan has an extensive knowledge of airport transportation planning and development principles and practices. He has a thorough knowledge of TxDOT and FAA policies and standards, budget and compliance requirements.

EDUCATION

University of Texas at Austin
Bachelor of Science
Civil Engineering, 1988

REGISTRATION

Licensed Professional Engineer
Texas, 88531

YEARS OF EXPERIENCE

33

NOTABLE PROJECTS

- MAF Air Carrier Runways and Taxiways Rehabilitation
- MAF Terminal Vehicle Parking Rehabilitation and Parking Equipment Replacement
- MDD New Hangar Development
- Pecos Municipal Terminal Renovation/Addition
- Plainview-Hale County Business Park
- Plainview/Hale County Airport - Airport Management Study
- Plainview/Hale County Airport - Boundary and Hangar Survey
- Plainview Miscellaneous Services (2021-2025)
- Port San Antonio Shoulder
- Private Hangar at Midland International Air & Space Port (MAF) [Good Shed]
- Rockwall Airport SWPPP
- TxDOT-Rockwall Pavement Rehabilitation and Drainage Project
- TxDOT Big Spring McMahon Airpark Apron
- TxDOT Cameron AP Pavement Rehab, Lighting, and PAPI
- TxDOT Cleburne Taxiway D Relocation, Runway 15/33 and Taxiway A Rehabilitation
- TxDOT Eastland Municipal Airport - Pavement Improvement
- TxDOT Floydada Municipal Airport
- TxDOT Gaines County Airport Wildlife Fence
- TxDOT Hale County Airport 2013 CSJ No 1305PLNVW
- TxDOT Hereford Airport 2014
- TxDOT Kimble County Airport - Junction
- TxDOT Lampasas Air 2016
- TxDOT Littlefield Air 2016
- TxDOT Moore County Airfield Rehab
- TxDOT Muleshoe Municipal Airport Pavement Reconstruction
- TxDOT Pecos Municipal Airport Taxiway and Apron Rehabilitation
- TxDOT Perryton Airport 2010
- TxDOT Post-Garza County Airport Improvements
- TxDOT Seymour Municipal Airport 2018
- TxDOT Stanton Airport Pavement Rehab Lighting
- TxDOT Sugar Land MP - Sub to RAWA
- TxDOT Winkler County Airport Pavement Improvements
- Winkler County Airport Hangars



Michael Krusing, PE

Civil Engineer | Associate

Michael Krusing, PE, is an Associate and Team Leader for Parkhill's Aviation Sector. After joining Parkhill in 2007, Michael worked with the infrastructure team in Amarillo, until 2010, when he joined Parkhill's Aviation team. In November 2014, Michael transferred from Parkhill's Amarillo office to the Lubbock office to better serve Parkhill's clients. Michael has gained experience by designing multiple projects for TxDOT Aviation and New Mexico Department of Transportation. He has also worked on projects benefiting Lubbock Preston Smith International Airport, Midland International Airport, and El Paso International Airport. Michael played a vital role in the designs of two projects that won Most Improved Airport in 2015 (Hemphill County) and 2017 (Hale County).

EDUCATION

Texas Tech University
Bachelor of Science
Civil Engineering, 2007

REGISTRATION

Licensed Professional Engineer
Texas, 111822

Licensed Professional Engineer
New Mexico, 20863

YEARS OF EXPERIENCE

14

NOTABLE PROJECTS

- Artesia Municipal Airport Runway 12-30 Phase II Reconstruction
- Artesia Municipal Airport Runway 12-30 Reconstruction Preliminary Design, Final Design & Bid Phase Services
- Artesia Municipal Airport Runway 12-30 Reconstruction Preliminary Engineering Report
- Artesia Municipal Airport Runway 3-21 Rehabilitation
- Artesia Municipal Airport Taxiway A1 Construction
- El Paso International Airport FBO Ramp Addition and Taxiway U & V Realignment
- Lubbock Runway 17R-35L Construction
- MAF Airfield Lighting Rehabilitation
- MAF Concrete Terminal Apron Rehabilitation
- MAF NW Basin Wildlife Improvements
- MAF Terminal Vehicle Parking Rehabilitation and Parking Equipment Replacement
- MDD New Hangar Development
- MAF Emergency Roadway and Gates Rehabilitation
- TxDOT Cleburne Taxiway D Relocation, Runway 15/33 and Taxiway A Rehabilitation
- TxDOT Dimmitt Municipal Airport 2011
- TxDOT Floydada Municipal Airport
- TxDOT Graham Municipal Airport
- TxDOT Hale County Airport
- TxDOT Hemphill Co Airport
- TxDOT Hereford Airport
- TxDOT Moore County Airport
- TxDOT Perryton Airport



Lanell Pahe

Engineering Technician

Lanell Pahe is a member of Parkhill's Aviation Sector. Her design experience includes pavement design, FAAR field pavement evaluation, airfield site layout, marking and electrical layouts, pavement rehabilitation, drainage, site grading, Stormwater Pollution Prevention Plan (SWPPP), and Construction Safety and Phasing Plan Layout. Lanell has worked on multiple TxDOT Aviation Projects and Part 139 airports. She uses Civil 3D 2019, Aeroturn and G.I.S. for design and project cost estimating.

EDUCATION

New Mexico State University
Bachelor of Science
Civil Engineering Technology, 2016

YEARS OF EXPERIENCE

7

NOTABLE PROJECTS

- Aerocare-Plainview
- Artesia Municipal Airport Runway 12-30 Phase II Reconstruction
- Artesia Municipal Airport Runway 3-21 Rehabilitation
- CES - Albuquerque ABQ Jet Bridge Assessment
- El Paso International Airport FBO Ramp Addition and Taxiway U & V Realignment
- El Paso International Airport Taxiway A Realignment and Taxiways D & F Reconstruction
- LBB Airfield-Wide Joint Seal
- LBB Airfield Asphalt - Package 3
- LBB CIP Update-Airfield Asphalt Repair Package 3
- LBB Runway 17R-35L Ph II Construction
- LBB Taxiways M and J Rehabilitation
- Lubbock Preston Smith International Airport Runway 17R-35L Design
- Lubbock Preston Smith International Airport Terminal Apron Rehabilitation
- Lubbock Runway 17R-35L Construction
- MAF Airfield Lighting Rehabilitation
- MAF Concrete Terminal Apron Rehabilitation
- MAF NW Basin Wildlife Improvements
- MAF RIM (Runway 10 End)
- Midland International Air and Space Port Airfield Storm Drainage Study and Upgrades
- Moore County Airport Hangar
- Municipal Airport Runway 12-30 Reconstruction Preliminary Design, Final Design & Bid Phase Services
- Plainview-Hale County Business Park
- Rockwall Airport SWPPP
- TxDOT Cleburne Taxiway D Relocation, Runway 15/33 and Taxiway A Rehabilitation
- TxDOT Floydada Municipal Airport
- TxDOT Graham Municipal Airport
- TxDOT Hale County Airport 2013 CSJ No 1305PLNVW
- TxDOT Hemphill County Airport 2013
- TxDOT Hereford Airport 2014
- TxDOT Midland Airpark Hangars
- TxDOT Moore County Airfield Rehab
- TxDOT Muleshoe Municipal Airport Pavement Reconstruction
- TxDOT Perry Lefors Field (Pampa) Elec Improvements
- TxDOT Perryton Airport 2010
- TxDOT Post-Garza County Airport Improvements
- TxDOT Stanton Airport Pavement Rehab Lighting



EDUCATION

ITT Technical Institute
Associate of Applied Science

University of Louisiana at Lafayette
Marine Survival Training

YEARS OF EXPERIENCE

<1

Tyler Scheller

Civil Engineering Technologist

Tyler Scheller of Parkhill's Aviation Sector brings CADD Technician/Drafter expertise to the team. Tyler's mechanical design background transitions seamlessly into the aviation field with a specific focus on Civil 3D drawings. He studies project specifications and creates drawings to meet Parkhill standards. Tyler's attention to detail and technical acumen ensure each drawing is accurate and aligns with project requirements.

Tyler is highly skilled and results-driven with a diverse background in project management, drafting, and design. With a keen eye for detail and a passion for excellence, he has overseen and documented numerous successful projects throughout his career. Tyler is known for his commitment to client satisfaction and ability to build strong relationships. He has successfully collaborated with customers on contracts, bids, and specifications, ensuring needs are met and change orders seamlessly managed. With a strong work ethic, exceptional attention to detail, and drive for continuous improvement, Tyler is dedicated to delivering high-quality work, exceeding client expectations, and contributing to the success of every project he undertakes.

Notable Projects

- El Paso International Airport Taxiway Golf Reconstruction
- Tulsa Airport Perimeter Road Rehabilitation
- MAF Reconstruct Taxiway E



Blake Snellgrove

Engineering Student

YEARS OF EXPERIENCE

0

NOTABLE PROJECTS

- LEDA-LBBK Bus Park N. Nutmeg and Hunter
- LEDA-Lbbk Bus Park South Half Ivory Ave
- MAF PFC Application and Amendments 2019
- MAF New Terminal Vehicle Parking Lots
- MAF RIM (Runway 10 End)
- MAF Terminal Vehicle Parking Rehabilitation and Parking Equipment Replacement
- MAF Construct Taxiway and Apron at CAF
- Lubbock Preston Smith International Airport Terminal Apron Rehabilitation
- LBB Airfield-Wide Joint Seal
- MAF Terminal Building Outbound Baggage Conveyance System Replacement
- MAF DBE Program Management
- TxDOT Perry Lefors Field (Pampa) Elec Improvements
- MAF Access Control System and Cable Upgrade
- TxDOT Moore County Airfield Rehab



Rodrigo Vela, EIT

Civil Engineer-in-Training

Rodrigo Vela is an engineer-in-training in Parkhill's Aviation Sector. Rodrigo joined Parkhill in 2013 as an intern in the Aviation Sector and was employed full-time as an engineer-in-training in 2015. Rodrigo has excelled in aviation planning and design, airfield drainage design, airport marking layout planning and design, and electrical lighting planning and design. He has a proven ability to work and communicate effectively with all personnel directly or indirectly involved in all projects. That dedication and his drive for design excellence have made him an asset to Parkhill.

EDUCATION

Texas Tech University
Bachelor of Science, Civil Engineering

REGISTRATION

Engineer-in-Training
Texas No. 51822

YEARS OF EXPERIENCE

8

Notable Projects

- Artesia Municipal Airport Runway 12-30 Phase II Reconstruction
- El Paso International Airport FBO Ramp Addition and Taxiway U & V Realignment
- El Paso International Airport Taxiway Golf Reconstruction
- Graco Hangar
- Lubbock Preston Smith International Airport Runway 17R-35L Design
- Lubbock Preston Smith International Airport Terminal Apron Rehabilitation
- MAF Air Carrier Runways and Taxiways Rehabilitation
- MAF RIM (Runway 10 End)
- TxDOT Cameron AP Pavement Rehab, Lighting, and PAPI
- TxDOT Culberson County Airport Airfield Rehabilitation and Runway 3-21 PAPI and Lighting Improvements (Van Horn)
- TxDOT Hemphill County Airport 2013
- TxDOT Hereford Airport 2014
- TxDOT Lampasas Air 2016
- TxDOT Odessa Ector County Airport Terminal Apron Expansion & Runway 11-29 MALS Installation
- TxDOT Pecos Municipal Airport Taxiway and Apron Rehabilitation
- TxDOT Stanton Airport Pavement Rehab Lighting
- TxDOT Winkler County Airport Pavement Improvements
- Winkler County Airport Hangars

APPENDIX B: LABORATORY CERTIFICATION
(Available upon request)

APPENDIX C: SUBMITTAL PROCESS SUMMARY

Table 1: SUMMARY OF SUBMITTALS									
Specification	**Spec Section**	**Submitted By**	**Material**	**Test Standard**	**Test Required**	**Sampling Locations**	**Minimum Test Frequency**	**Requirements**	**Notes**
C-100, Contracotr Quality Control Program	100-1	C					1/Project		Contractor shall establish a CQCP
C-102, Temporary Air and Water Pollution, Soil Erosion, and Siltation Control	102-1	C					1 / Project		Contractor to prepare SWPPP and NOI, submit copies to Engineer/Owner.
P-101, Surface Preparation	101-2	C					1/Project		Contractor to submit equipment and material list for Engineer's approval
	101-3.2	C	Emusified asphalt and Aggregate for cracks		Gradation	Source	1 / Project	Gradation table	<3% Cement; <20% natural sand
P-152, Excavation, Subgrade, and Embankment	None	C							
P-154 Subbase Course	154-2.1	C	Subbase	ASTM D1883	California Bearing Ration (CBR)	Source	1 / Project	A CBR value of at least 20	
	154-2.1	C	Subbase		Gradation	Source	1 / Project	Gradation Table	
	154-2.1	C	Subbase	ASTM D4318	Liquid Limit	Source	1 / Project	Material passing No. 40 sieve shall have a liquid limit not more than 25	
	154-2.1	C	Subbase	ASTM D4318	Plasticity Index	Source	1 / Project	Material passing No. 40 sieve shall have a plasticity index not more than 6	
	154-2.2a	C	Subbase	ASTM D75		Source		Verify Meets Specifications	
P-209, Crushed Aggregate Base Course	209-2.1	C	Coarse Aggregate	ASTM C88	Soundness	Source	1 / Project	Sodium Sulfate loss <12% or Magnesium Sulfate loss <18% after 5 cycles.	
	209-2.1	C	Coarse Aggregate	ASTM C131	Percentage of Wear	Source	1 / Project	% Wear of Crushed Aggregate Retained on No. 4 Sieve <40%.	
	209-2.1		Coarse Aggregate	ASTM D4791	Flat, elongated, and flat and elongated particles	Source	1/project	<5% by weight	
			Coarse Aggregate	ASTM D5821	Fractured Faces	Source	1/project	>90% by weight having 2 or more fractured faces and 100% by weight having at least 1 fractured face. Area of each face at least 75% of the smallest mid-sectional area of the piece. When 2 fractured faces are contiguous the angle between the fractures shall be at least 30 degrees.	Achieved by crushing.
	209-2.2	C	Aggregate	ASTM C117 and C136	Sieve Analysis	Source	1 / Project	Gradation table and the fraction of material passing #200 sieve shall not exceed one=half the fraction passing the # 40 sieve.	
	209-202		Aggregate	ASTM D422	Particle-Size Analysis	Source	1/Project		

Table 1: SUMMARY OF SUBMITTALS

Specification	Spec Section	Submitted By	Material	Test Standard	Test Required	Sampling Locations	Minimum Test Frequency	Requirements	Notes
Item 401, Hot Mix Asphalt (HMA) Pavements	401-2.1	C	Aggregate	Ferrous Sulfides/Iron Oxides	Lime Slurry	Source	1/project	No Brown Gelatinous Precipitate	
	401-2.1.a	C	Course Aggregate	ASTM C131	Percent of Wear	Source	1/project	<40%	
				ASTM C88	Sodium Sulfate Soundness Loss	Source	1/project	<12% or <18% after 5 cycles	
					Fractured Faces	Source	1/project	>75% by weight having 2 or more fractured faces and >85% by weight having at least 1 fractured face.	Achieved by crushing.
				ASTM D4791	Flat, elongated, and flat and elongated particles	Source	1/project	<8% by weight	
	401-2.1.b	C	Fine Aggregate	ASTM D4318	Plasticity Index (PI) and Liquid Limit (LL)	Source	1/project	PI < 6 LL < 25	
				ASTM C88	Soundness Loss (after 5 cycles)	Source	1/project	<10% (for sodium sulfate) or <15% (for magnesium sulfate)	
				ASTM C142	Clay lumps and friable particles	Source	1/project	<1% by weight	
			Natural Sand (if used)	ASTM D1073	Standard spec for fine aggregate (Grading, fineness modulus, and PI)	Source	1/project	Must meet requirements of ASTM D1073	Applies if natural sand is used.
			Natural Sand (if used)	ASTM D4318	Plasticity Index (PI) and Liquid Limit (LL)	Source	1/project	PI < 6 LL < 25	Applies if natural sand is used.
	401-2.2	C	Mineral Filler (if used)	ASTM D242	Standard spec for Mineral Filler	Source	1/project	Must meet requirements of ASTM D242	If filler, in addition to that naturally present in aggregate, is necessary, this applies.
	401-2.3	C	Asphalt Cement Binder	ASTMD6373	Standard Spec for Asphalt Cement Binder	Source	1/project	Munst meet requirements of ASTM D6373 for PG 64-28	Include manufacturer Certificate of Compliance in mix design. Supplier's certified test report provided to engineer for each load delivery to mix plant. If binder modified after delivery to mix plant, provide engineer with certified test report indicating grade certification.
	401-2.5	C	Anti-Stripping Agent or Additive	Shall be heat stable, not change the asphalt cement viscosity beyond specifications, contain no harmful ingredients, be added in recommended proportion by approved method, and APPROVED BY STATE DEPARTMENT OF					Applies if anti-stripping agent or additive required.
	401-3.2	C	HMA Job Mix Formula (JMF)	Designed Using: Asphalt Instutitue's MS-2 Mix Design Manual, 7th edition	JMF	Plant	1 per JMF used	Submitted > 30 days prior to start of paving operations.	
				ASTM D4867	Tensile Strength Ratio	Plant	1 per JMF used	>75 when tested at 70-80% saturation	If TSR <75, use anti stripping agent to achieve >75.
				JMF to include, as minimum:					
				a. Total combined aggregate gradation, individual gradation of all aggregate stockpiles, and percent by weight of each stockpile used in the JMF					
				b. Percent of Asphalt Cement					
				c. Asphatl performance grade and type of modifier (if used)					
				d. Number of gyrations					
				e. Laboratory mixing temperature					
				f. Laboratory compaction temperature					
				g. Temperature-viscosity o fthe PG binder showing acceptable range of mixing and compation temperatures (for modified binders include supplier recommended mixing and compaction temperatures)					
				h. Plot of the combined gradation on a 0.45 power gradation curve.					
				i.Graphical plots of air voids, VMA, and unit weight versus asphalt content.					
				j. Specific gravity and absorption of each aggregate					
				k. Percent natural sand (if used)					
				l. Percent fractured faces					
				m. Percent by weight of flat particles, elongated particles, and flat and elongated particles					
				n. Tensile Strength Ratio (TSR)					
				o. Anti-strip agent (if required)					
				p. Date JMF was developed (must not be from prior construction season and less than 90 days prior to production).					
				q. Percentage and properties of RAP, if used (asphalt content, binder properties, and aggregate properties).					
				Contractor shall submit result of verification testing of 3 samples prepared at optimum asphalt content. The average of these results will indicate conformance with the JMF requirements of Tables 1 and 3.					
				Table 1: Gyratory Design Criteria (75 gyrations)					
				Target Air Voids = 3.5%					
				VMA minimum = 15%					

Table 1: SUMMARY OF SUBMITTALS

Specification	Spec Section	Submitted By	Material	Test Standard	Test Required	Sampling Locations	Minimum Test Frequency	Requirements	Notes
				Gradation meeting Table 3 Gradation					
			HMA	Gyratory Design Using 75 Gyrations	Target Air Voids	Plant HMA Samples	3 per JMF	3.50%	
					Voids in Mineral Aggregate (VMA)	Plant HMA Samples	3 per JMF	15% (minimum)	
			HMA	ASTM D6307 or ASTM D2172	Asphalt Content	Plant HMA Samples	3 per JMF	5.0-7.5% (Stone or Gravel); 6.5-9.5% (Slag)	Use ASTM D2172 if correction factor in ASTM D6307 is >1.0.
			HMA	ASTM C136 and ASTM C117	Gradation	Plant HMA Samples	3 per JMF	Table 3	
	401-3.3	C	Recycled Asphalt Pavement (RAP)	RAP may only be used in Shoulder and base course design. RAP shall not be used in surface course. Max RAP allowed is 30%, other restrictions and requirements apply, see spec section.					
	401-4.11	C	Laydown Plan: Contractor shall submit a laydown plan prior to placement of HMA						Should be designed to minimize cold joints in pavement.
	401-6.1	C	Contractor Quality Control Plan: Contractor shall not be allowed to place test section until Contractor Quality Control Program has been approved. (401-3.5)						See section 401-6.1 for minimum plan elements.
P-602, Bituminous Prime Coat		C	Asphalt	ASTM D977, D2397, D2027 or D2028	Asphalt Type	Source	1 / Project	Conforms to test method.	
	602-2.1	C	Bituminous Material	ASTM D3628	Selection and Use of Emulsified Asphalts	Source	1 / Project		
	602-2.2	C	Herbicide			Source	Project	Herbicide Product	
P-603, Bituminous Tack Coat	603-2.1	C	Bituminous Material	(ASTM D3628) ASTM D977, D2028 or D2397	Selection and Use of Emulsified Asphalts	Source	1 / Project	Conforms to test method.	
P-608-R, Rapid Cure Seal Coat	608-R-2.1	C	Aggregate				1/Project	Manufacturer's Technical Data	
	608-R-2.2	C	Asphalt				1/Project	List of Airport pavement projects where product has been succesffully applied within at least 65 years of the project	
P-610, Structural Portland Cement Concrete	610-2.1.a.1	C	Fine and Coarse Aggregate	ASTM C1260	Alkali Reactivity of Aggregates	Source	1 / Coarse Aggregate; 1 / Fine Aggregate	<.1% at 28 days	
	610-2.1.a.2-3	C	Fine and Coarse Aggregate	ASTM C1567	Alkali Reactivity of Aggregates	Source	1 / Project	<.1% at 28 days	Combine Fine and Coarse Aggregate.
	610-2.2 and 610-2.2.1	C	Coarse Aggregate	ASTM C666	Freeze/Thaw Test	Lab/Source	1 / Project	Durability factor ≥ 95.	
	610-2.2 and 610-2.3	C	Fine and Coarse Aggregate	ASTM C33	Concrete Aggregates	Source	1 / Coarse Aggregate; 1 / Fine Aggregate	Conform to test method.	
	610-2.2 and 610-2.3	C	Fine and Coarse Aggregate	ASTM C136	Sieve Analysis	Source	1 / Coarse Aggregate; 1 / Fine Aggregate	Sieve Table	
	610-2.4	C	Cement	ASTM C150	Portland Cement	Source	1 / Project	Type II	
	610-2.6.a	C	Air-Entraining Admixture	ASTM C260	Air-Entraining Admixtures for Concrete	Source	1 / Project	Conform to test method.	
	610-2.6.b and 610-2.6.c	C	Chemical Admixture	ASTM C494	Chemical Admixtures	Source	1 / Project	Retarding shall meet Type A, B, or D; Set accelerating shall meet Type C; Calcium chloride and admixtures containing calcium chloride shall not be used.	
	610-2.7	C	Joint Filler	ASTM D1751 or ASTM D1752	Preformed Joint Filler	Source	1 / Project	Conform to test method.	
	610-2.9	C	Steel-Welded Wire Reinforcement	ASTM A1064	Standard Spec for Steel-Welded Wire Reinforcement	Source	1 / Project	Conform to test method.	Formerly ASTM A185.
	610-2.9	C	Billet-Steel Bars	ASTM A615	Standard Spec for Deformed and Plain Billet-Steel Bars	Source	1 / Project	Grade 60	
	610-2.10	C	Curing Material	ASTM C309	Liquid-Membrane Forming Curing Materials	Source	1 / Project	Type 2, CL B	
	610-3.2	C	PCC	ASTM C39	Compressive Strength of Cylindrical Concrete Specimens	Source/Lab	1 / Project	Shall develop a compressive strength of 3500psi in 28 days.	
	610-3.2 and 610-3.6	C	PCC	ASTM C143	Slump Test	Source	1 / Project	Slump not more than 4".	
	610-3.2	C	PCC	ASTM C231	Air Content Test	Source	1 / Structure	Concrete shall contain %5 of entrained air ±1%.	
		C	Epoxy-Coated Steel Bars	ASTM A775 or ASTM A934	Epoxy-Coated Steel Reinforcing Bars	Source	1 / Project	Conform to test method.	
		C						Mix Design	
P-620, Runway And Taxiway Marking	620-2.2	C	Paint			Source	Project	Paint Type	
	620-2.2.a	C	Paint	FED SPEC TT-P-1952E	Paint Spec.	Source	1 / Project	Conform to test method.	
	620-2.3	C	Reflective Media	FED SPEC TT-B-1325D	Reflective Media	Source	1 / Project	Conform to test method.	

Table 1: SUMMARY OF SUBMITTALS									
Specification	**Spec Section**	**Submitted By**	**Material**	**Test Standard**	**Test Required**	**Sampling Locations**	**Minimum Test Frequency**	**Requirements**	**Notes**
D-705, Pipe Underdrains For Airports	705-2.2	C	Pipe	ASTM F758	PVC Underdrain Systems	Source	1 / Project	Conform to test method.	
	705-2.2	C	Pipe	AASHTO M252	Corrugated Polyethylene Drainage Tubing	Source	1 / Project	Conform to test method.	
	705-2.3	C	Cement for Joint Mortar	ASTM C150	Portland Cement	Source	1 / Project	Type I	
	705-2.3	C	Sand for Joint Mortar	ASTM C144	Aggregate for Masonry Mortar	Source	1 / Project	Conform to test method.	
	705-2.4	C	Elastomeric Seals	ASTM F477	Elastomeric Seals for Joining Pipe	Source	1 / Project	Conform to test method.	
	705-2.5	C	Backfill	ASTM C136	Sieve Analysis	Source	1 / Project	Sieve Table	
	705-2.6	C	Granular Material for Backfill	ASTM D2321	Underground Installation of Thermoplastic Pipe	Source	1 / Project	Class 1A, 1B, or II	
	705-2.7	C	Filter Fabric	AASHTO M288-99	Geotextile Spec for Highway Applications	Source	1 / Project	Class 2	
	705-2.7 Table 2	C	Filter Fabric	ASTM D4632	Grab-Breaking Load and Elongation of Geotextiles	Source	1 / Project	Tensile strength : 125lbs min; Tensile elongation: 50% min.	
	705-2.7 Table 2	C	Filter Fabric	ASTM D3785	Standard Spec for Woven Necktie and Scarf Fabrics	Source	1 / Project	125psi min.	
	705-2.7 Table 2	C	Filter Fabric	ASTM D4533	Trapezoid Tearing	Source	1 / Project	55lbs min.	
	705-2.7 Table 2	C	Filter Fabric	ASTM D4833	Index Puncture Resistance	Source	1 / Project	40lbs min.	
	705-2.7 Table 2	C	Filter Fabric	ASTM D4886	Abrasion Resistance	Source	1 / Project	15lbs max loss.	
	705-2.7 Table 2	C	Filter Fabric	ASTM D4751	Determining Apparent Opening Size	Source	1 / Project	70-100	
	705-2.7 Table 2	C	Filter Fabric	ASTM D4491	Water Permeability	Source	1 / Project	0.8 sec^{-1}	
	705-2.7 Table 2	C	Filter Fabric	ASTM D4355	Deterioration of Geotextiles	Source	1 / Project	70%	
		C	Edge Drain Check Valve			Source	1 / Project		
		C	Rodent Screen			Source	1 / Project		
T-901, Seeding	901-2.1	C	Seed	Fed Spec JJJ-S-181	Type	Source	Project	Seed blend/quantity of pure live seed.	
	901-2.3	C	Fertilizer		Type	Source	Project	Fertilizer.	
T-905, Topsoiling	905-2.1	C	Topsoil	ASTM C117	Materials Finer Than No. 200 Analysis	Source	Project		
	905-2.1	C	Topsoil		pH	Source	Project	pH	
	905-2.1	C	Topsoil		% Organics	Source	Project	% of organics.	
L-108, Underground Power Cables for Airport		C		L-824 5 KV Cable					
		C						#6 AWG copper ground wire	
		C		L-823 Connector kits					
		C						Cable splicer qualifications	Send sample splices to Engineer for review.
L-110, Airport Underground Electrical Duct Banks and Conduits		C		2" SCH 40 PVC Conduit					
L-125, Installation of Airport Lighting Systems		C		L862 HIRL Fixture					
		C		L850 HIRL Fixture					
		C		L830-18 (150W) Transformer					
		C		L830-6 (200W) Transformer					
		C						PVC Transformer support	
		C						Figure ID tags	
Other Submittals		C	Low profile barricades, other traffic control devices.					Meets AC 150/5370-2.	

APPENDIX D: QUALITY CONTROL TESTING (BY CONTRACTOR)

Table 2: QUALITY CONTROL (by Contractor)

Specification	Spec Section	Test By	Material	Test Procedure	Test Required	Sampling Locations	Minimum Test Frequency	Requirements	Notes
P-101, Surface Preparation		C		None	None				
P-152, Excavation, Subgrade, and Embankment		C		None	None				
P-154 Subbase Course	154-2.2b	C	Subbase	Gradation	ASTM C136 and C117	In-place, un-compacted material	At least 1 sample	Verify meets specifications	
	154-3.9a	C	Subbase	Compaction		As specified by ASTM D3665	At a minimum of 400 sq. yds per each lift, or as determined by geotechnical engineer	Shall Achieve 100% of Lab Density and within 2% of optimum moisture content	
	154-3.9b	C	Base Course	Thickness				The thickness of the base course shall be within +0 and -1/2 inch of the specified thickness as determined by depth tests taken by the Contractor in the presence of the RPR	
P-156, Temporary Air and Water Pollution, Soil Erosion, and Siltation Control		C		None	None				
P-209, Crushed Aggregate Base Course	209-2.2.a	C	Aggregate	ASTM C117 and C136	Sieve Analysis	Source or stockpile	2 per lot	Gradation table and the fraction of material passing #200 sieve shall not exceed one=half the fraction passing the # 40 sieve.	May be done by Contractor or Engineer, check section to see who is specified to do this test.
	209-3.6		Base Course	12 ft Straightedge	Smoothness	Source	1/Project		
	209-3.7		Base Course	Depth test	Thickness	Completed Base Course	Minimum 1 per 300 SY	Must not be deficient by more than 1/2 inch	
P-401, Hot Mix Asphalt (HMA) Pavements	401-6.3.a	C	Asphalt Content	ASTM D6307 (or ASTM D2172)	Asphalt Content	During Production	2 / lot	5-7% (Stone or gravel) 6.5%-9.5% (Slag)	If pay factor in ASTM D6307 >1.0, use ASTM D2172.
	401-6.3.b	C	Aggregate	ASTM D5444, C136, and C117	Gradation	During Production	2 / lot	See Table 3	
	401-6.3.c	C	Aggregate	ASTM C566	Moisture Content of Aggregate	During Production	1 / lot		
	401-6.3.d	C	HMA	ASTM D1461 (or AASHTO T329 when determined by conventional oven or microwave)	Moisture Content of HMA	During Production	1 / lot	<0.5% (401-4.9	
	401-6.3.e	C	Binder and HMA	Manual	Temperature	Binder in storage tank, HMA at plan, and HMA at job site	4 / lot	Within limits of JMA	
	401-6.3.f	C	HMA	ASTM 2950	In-Place Density Monitoring	In-place	As needed to ensure density requirements are met	Mat 96.3-101.3% Joint 93.3%	
	401-6.3.g, Additional Testing	C	Contractor may perform other testing as desired to ensure quality standards are met.						
	401-6.3.h, monitoring	C	Engineer has the right to monitor any or all of the Constractor's QC testing.						
	401-6.5, Control Charts	C	HMA	Aggregate Gradation	Contractor to maintain linear control charts both for individual measurements and range. See 6.5.a for Individual measurement control chart limits and 6.5.b for Range control chart limits.				
				Asphalt Content					
				VMA					
	401-6.6, Quality Control Reports	C	Contractor shall maintain records and submit reports daily (See General Conditions, Section 100).						
P-602, Bituminous Prime Coat		C			None				
P-603, Bituminous Tack Coat					None				
P-608-R, Rapid Cure Seal Coat	608-R-2.1	C	Aggregate	ASTM C136	Gradation		1/ Project	Must meet Aggregate Characterists	
	608-R-2.2	C	Asphalt Content				1/Project	Must meet Properties for Asphalt Sealing Material, Tests on Residue from Distillation	
	610-2.3	C	Fine Aggregate	ASTM C33	Gradation	Source	1/ Project	Blending will be permitted to meet the gradation requirements for fine aggregate.	
	610-2.4	C	Cement	ASTM C150, Type I or II		Source	1/ Project		
	610-2.6	C	Water	ASTM C1602		Source	1/ Project		
	610-2.7a	C	Admixture	ASTM 260	Air Entrainment				

Table 2: QUALITY CONTROL (by Contractor)									
Specification	**Spec Section**	**Test By**	**Material**	**Test Procedure**	**Test Required**	**Sampling Locations**	**Minimum Test Frequency**	**Requirements**	**Notes**
P-610, Structural Portland Cement Concrete	610-2.7a	C	Admixture	ASTM C494, Type A, B or D	Water Reducer	Source	1/ Project	Type F and G high range water reducing admixtures and ASTM C1017 flowable admixtures shall not be used.	
	610-2.7a	C	Admixture	ASTM C494, Type A, B or D	Other chemical admixtures	Source	1/Project	Shall meet requirements of ASTM C494 Type C	Do not use calcium chloride and admixtures containing calcium chloride
		C	PCC	ASTM C143	Slump Test		1 / structure	Slump not more than 4"	RPR to monitor test.
		C	PCC	ASTM C231	Air Content		1 / structure	5% ± 1%	RPR to monitor test.
P-620, Runway And Taxiway Marking		C			None				
D-705, Pipe Underdrains For Airports		C			None				
T-901, Seeding		C			None				
T-905, Topsoiling		C			None				
L-108, Underground Power Cables for Airport		C		Submerged reel testing				See spec.	RPR to monitor test.
L-110, Airport Underground Electrical Duct Banks and Conduits		C						See spec.	RPR to monitor test.
L-125, Installation of Airport Lighting Systems		C						See spec.	RPR to monitor test.
Other Submittals		C			None				

APPENDIX E: ACCEPTANCE TESTING/QUALITY ASSURANCE (BY ENGINEER)

Table 3: QUALITY ASSURANCE (by Engineer)									
Specification	**Spec Section**	**Test By**	**Material**	**Test Procedure**	**Test Required**	**Sampling Locations**	**Minimum Test Frequency**	**Requirements**	**Notes**
P-101, Surface Preparation	101-3.9.4.a	E	Existng Pipe Material	ASTM D698	Compaction	Trenches under paved areas	1 / 500 SY	95% minimum compaction	
	101-3.9-4.b	E	Inlet Removal	ASTM D698	Compaction	Area under paved and outside paved areas	1 / 500 SY	95% minimum compaction	
	101-3.9.4.c	E	Removal of SET	ASTM D698	Compaction	Trenches under paved areas	1 / 500 SY	95% minimum compaction	
P-152, Excavation, Subgrade, and Embankment	152-2.5	E	Subgrade	ASTM D698	Nuclear Density Test	In-Place	1 / 500 SY	Top 12 inches of subgrade shall be compacted to no less than 100% maximum density for non-cohesive soils (PI <3) and 95% maximum desnity for cohesive soils	Determine % water requirement
	152-2.9	E	Subgrade		Proof Rolling	In-Place	Per lift	>1 inch or engineer discretion shall be removed or reworked	Tire loaded to min of 30,000lbs; tires min 125 psi.
	152-2.6	E	Subgrade	ASTM D6988 ASTM D1557	Proctor	Source	1 / 2,500 SY / layer		
	152-2.13	E	Subgrade	Straight-Edge Grade Tolerance	Surface smoothness	In-Place	Grid Spacing at 50-ft.	≤1/2" deviation (using 12' straight-edge); ±0.05' from true grade.	
P-154 Subbase Course	158-3.8	E	Subbase	Density		As specified by ASTM D3665	At a minimum of 400 sq. yds per each lift, or as determined by geotechnical engineer	Shall Achieve 100% of Lab Density and within 2% of optimum moisture content	
P-209, Crushed Aggregate Base Course	209-2.1	E	Aggregate	ASTM C131, ASTM C88, ASTM D5821, ASTM D4791, ASTM C29, ASTM C142, ASTM D4318		Source or stockpile	2 per lot	Must meet requirements of Crushed Aggregate Base Material Requirements listed in table	May be done by Contractor or Engineer, check section to see who is specified to do this test.
	209-2.2	E	Aggregate	ASTM C117 and ASTM C136	Gradation	Source or stockpile	2 per lot	Must meet requirements of Gradation of Aggregate Base listed in table	
	209-2.3	E	Base Course	ASTM D75	Aggregate base requirements and gradation.	Source	1 per sublot.		
	209-3.4	E	Base Course	Survey	Grade Verification	In Place, finished base course	50 foot stations	Finish Base Grade to be within -1/2 inch and +0 inches of specified grade	
	209-3.5	E	Base Course	ASTM D1557	Compaction	In Place, finished base course	1 per sublot.	100% maximum density, +/- 2% of optimum moisture	
P-156, Temporary Air and Water Pollution, Soil Erosion, and Siltation Control		E		None	None				

Table 3: QUALITY ASSURANCE (by Engineer)									
Specification	**Spec Section**	**Test By**	**Material**	**Test Procedure**	**Test Required**	**Sampling Locations**	**Minimum Test Frequency**	**Requirements**	**Notes**
P-401, Hot Mix (HMA) Pavements	401-5.1.a	E	Plant HMA	ASTM D3203	Air Voids	During production from trucks either at plant or onsite.	1 set of 3 specimens per sublot	2-5%	Based on Theoretical Maximum Specific Gravity.
				ASTM D6925	Lab Compacted Specimens	During production from trucks either at plant or onsite.	1 set of 3 specimens per sublot	See Table 1, 401-3.2 for number of gyrations.	
				ASTM D2726 or ASTM D6752	Bulk Specific Gravity of Lab Compacted Specimens	During production from trucks either at plant or onsite.	1 set of 3 specimens per sublot		
				ASTM D2041	Theoretical Maximum Specific Gravity	During production from trucks either at plant or onsite.	1/sublot		
	401-5.1.b	C	In-Place HMA	ASTM D979	Mat density Coring	By Engineer on random basis according to ASTM D3665	1/sublot	Minimum 5" diameter, not closer than 1' from joint.	Contractor responsible for coring using diamond core drill bit.
					Joint density coring		1/sublot	Minimum 5" diameter, centered on joint.	
		E		ASTM D2726 or ASTM D6752	Bulk Specific Gravity of In-Place Samples	Cores from finished HMA	1/sublot for Mat and Joint		See 5.1.b(4) for correct test.
		E		ASTM D3203	Air Voids	Cores from finished HMA	1/sublot	2-5%	Based on Theoretical Maximum Specific Gravity
		E		Mat Density	Mat % Compaction = Mat Core Bulk Specific Gravity / Lab Specimen Bulk Specific Gravity		1/sublot	>96.3% and <101.3%	
		E		Joint Density	Joint % Compaction = Joint Core Bulk Specific Gravity / Lab Specimen Bulk Specific Gravity		1/sublot	>93.3%	
	401-5.2	E	In-Place HMA	Visual From Cores	Thickness	Cores from finished HMA	1/sublot	Single Sample Defiency 1/4" max avg thickness shall not be less than indicated lift thickness.	
		E		12' Straightedge	Smoothness	Transverse (perpendicular to CL)	50' intervals	<1/4" Variance	
		E		12' Straightedge	Smoothness	Paving Joints Between Lots	50' intervals (or less per Engineer)	Prior to production	
		E		12' Straightedge	Short Section (<200' lot length) Longitudinal Smoothness	Parallel to CL of paving and at center of paving lanes when widths < 20', or at the 1/3rd points when paving lane >20'.	Full length of short lot section	<1/4" Variance	Shall not be made through grade changes or cross slope transitions.
		E		Profilograph verification (ASTM E1274)	Longitudinal Smoothness	Parallel to CL of paving and at center of paving lanes when widths < 20', or at the 1/3rd points when paving lane >20'.	Continuous full length of lots	<7 inch per mile	Contractor responsible for providing profilograph and testing.
		E		Licensed and Stamped Survey	Grade	In-place finished HMA at 50' intervals longitudinally, and transversely at each grade brake but not less than 50'.	Every day during paving	Within 1/2" of design	Contractor to submit data to engineer the following day.
		E				During Production from Trucks either at plant or on site	Every Truck	Collect batch tickets	Write applicable information on batch tickets. Number and scan tickets.
P-602, Bituminous Prime Coat		E			Monitor application rate.	Site			RPR to monitor.
P-603, Bituminous Tack Coat		E			Monitor application rate.	Site			RPR to monitor.

Table 3: QUALITY ASSURANCE (by Engineer)									
Specification	**Spec Section**	**Test By**	**Material**	**Test Procedure**	**Test Required**	**Sampling Locations**	**Minimum Test Frequency**	**Requirements**	**Notes**
P-608-R, Rapid Cure Seal Coat	608-R-3.1	E			Monitor application rate.	Site	1/ Project		RPR to monitor.
P-610, Structural Portland Cement Concrete	610-2.1.a	E	PCC	ASTM 1260	Reactivity	Source	1/ Project	Expansion of test specimens shall not exceed 0.08% at 14 days (16 days from casting)	
	610-2.2	E	PCC	ASTM C33	Gradation	Source	1/ Project	Must meet requirements of Coarse Aggregate Grading Requirements	
	610-2.2.1	E	PCC	ASTM C666	D-Cracking	Source	1/ Project	20 year service record for the same gradation supplied with no history of D-Cracking	
	610-2.3	E	Fine Aggregate	ASTM C33	Gradation	Source	1/ Project	Blending will be permitted to meet the gradation requirements for fine aggregate.	
	610-3.2	E	PCC	ASTM C39	Compressive Strength Cylinders		1 / structure	Develop compressive strength of 3500psi in 28 days.	
	610-3.2	E	PCC	ASTM C143	Slump Test		1 / structure	Not more than 4".	
	610-3.2	E	PCC	ASTM C231	Air Content		1 / structure	5% air ± 1%	
	610-3.20 and 3.21	E			Weather/ Ambient Temperature	Site	As needed throughout placement or as conditions change.	See spec.	
P-620, Runway And Taxiway Marking		E			None				
D-705, Pipe Underdrains For Airports		E			None				
T-901, Seeding		E			None			RPR to collect seed bag tags to verify blend and rate.	
T-905, Topsoiling		E			None				
L-108, Underground Power Cables for Airport		E			Insulation resistance			RPR to observe QC test.	
L-110, Airport Underground Electrical Duct Banks and Conduits		E			None				
L-125, Installation of Airport Lighting Systems		E			None				
Other Submittals		E			None				

APPENDIX F: PAY FACTORS

Table 4 - PAY FACTORS		
Specification	**Spec Section**	**Pay Factors**
P-101 Surface Preparation	101-5.1	No Pay Factors
P-152 Excavation, Subgrade, and Embankment	152-4.1	No Pay Factors
P-154 Subbase Course	154	No Pay Factors
P-209 Crushed Aggregate Base Course	209	No Pay Factors, Contractor to Correct Deficiencies out of tolerance
P-401 Hot Mix (HMA) Pavements	401-8.1.c (Table 6)	Lot Pay Factor (based on PWL)
	401-8.1.e (Table 7)	Smoothness Pay Factor
	401-8.1.e	Payment for Lot = (Tons of HMA) X (Lot Pay Factor) X (Unit Price per Ton) X (Smoothness Pay Factor)
P-602 Bituminous Prime Coat	602-5.1	No Pay Factors
P-603 Bituminous Tack Coat	603-5.1	No Pay Factors
P-608-R Asphalt Surface Treatment	608	No Pay Factors
P-610 Structural Portland Cement Concrete	610-5.1	No Pay Factors
P-620 Runway And Taxiway Marking	620-5.1	No Pay Factors
D-701 Reinforced Concrete Pipe	701-5.1	No Pay Factors
D-752 Concrete Reinforced Safety End Treatment	D-752-5.1	No Pay Factors
T-901 Seeding	901-5.1	No Pay Factors
T-905 Topsoiling	905-5.1	No Pay Factors
L-108 Underground Power Cables for Airport	108-5.1	No Pay Factors
L-110 Airport Underground Electrical Duct Banks and Conduits	110-5.1	No Pay Factors
L-125 Installation of Airport Lighting Systems	125-5.1	No Pay Factors
Other Submittals		No Pay Factors

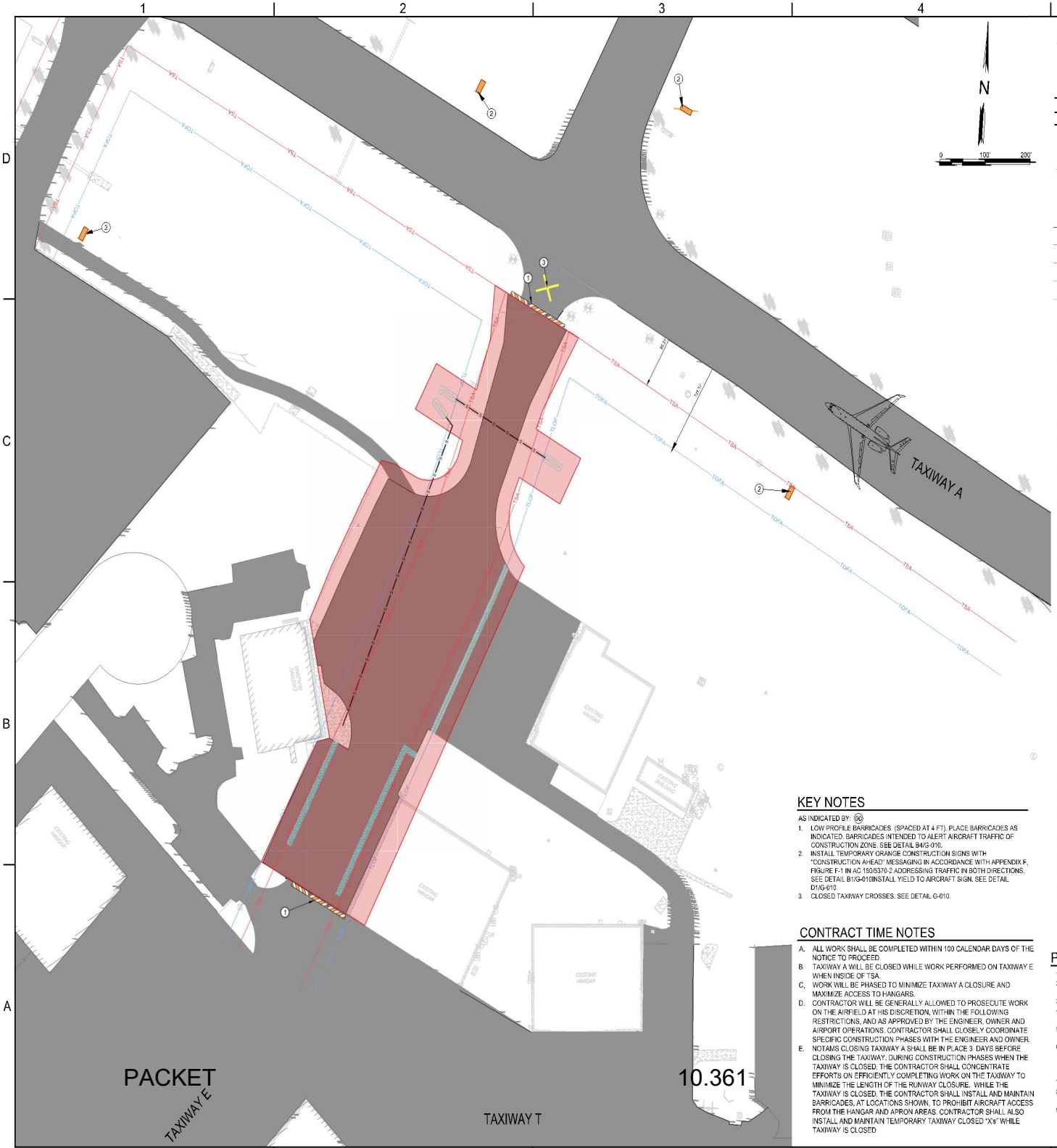

LEGEND

- PHASE 1
- EXISTING PAVEMENT TO REMAIN
- EXISTING BUILDING
- ORANGE "CONSTRUCTION AHEAD" SIGN (B1/G-011)
- YIELD TO AIRCRAFT SIGN (D1/G-011)
- LOW-PROFILE AVIATION BARRICADE (B4/G-011)
- EXISTING CLOSED TO AIRCRAFT "X" MARKING
- ACTIVE TAXIWAY / TAXILANE
- Xx — EXISTING FENCE TO REMAIN
- UGEx — EXISTING UNDERGROUND ELECTRIC
- TSA — TAXIWAY SAFETY AREA
- TOFA — TAXILANE OBJECT FREE AREA
- TOFA — TAXIWAY OBJECT FREE AREA

GENERAL NOTES

A. THIS PAGE IS INTENDED TO BE PRINTED IN COLOR. IF NOT, CONTACT ENGINEER AS SOON AS POSSIBLE.
B. THIS PLAN IS INTENDED TO GIVE THE CONTRACTOR AN UNDERSTANDING OF THE PHASING GOALS. ANY DEVIATION, HOWEVER, SHALL BE APPROVED BY AND ENGINEER PRIOR TO THE RECONSTRUCTION MEETING.
C. SCHEDULE IS IN CALENDAR DAYS. ALLOWABLE CALENDAR DAYS INCLUDE HOLIDAYS AND WEEKENDS. WEATHER DAYS OVER AND/OR ABOVE THE HISTORICAL NORM CAN BE CREDITED IF JUSTIFIED AND AGREED UPON BY THE ENGINEER AND AGENT.
D. CONTRACTOR SHALL MEET ALL SCHEDULE AND PHASING GOALS. SEE GOALS LISTED ON PHASING PLAN.
E. TOTAL CONTRACT TIME OF 100 CALENDAR DAYS IS BASED ON THE NUMBER OF DAYS ALLOTTED TO COMPLETE PHASES 1 AND 2 INCLUDING CURE TIME AND COMPLETION OF PUNCH LIST.
F. INSTALL AVIATION BARRICADE ACROSS ALL AIRCRAFT MOVEMENT AREAS ADJACENT TO CONSTRUCTION AREAS WITH ONE OR A COMBINATION OF DETAIL B4/G-010. INSTALL OUTSIDE TAXIWAY SAFETY AREA, OR ALONG EDGE OF APRON.
G. THE CONTRACTOR SHALL MAINTAIN ALL AIRSIDE PAVEMENTS FREE OF CONSTRUCTION DEBRIS. IF EQUIPMENT IS ROUTED ACROSS PAVEMENT, SWEEP THE PAVEMENT AS NEEDED TO ENSURE AIRCRAFT SAFETY.
H. AIRCRAFT ALWAYS HAVE THE RIGHT-OF-WAY.
I. MARK AND LIGHT CONSTRUCTION AREAS AND VEHICLES AS REQUIRED IN LATEST EDITION OF AC 150/5370-2.
J. WORK AREA BOUNDARY IN ALL UNPAVED AREAS SHALL BE MARKED WITH LATHS OR ORANGE SAFETY FENCE. LATHS SHALL BE PLACED AT 10FT SPACING.
K. CONTRACTOR SHALL MAINTAIN A 10FT CLEAR AREA ADJACENT TO BUILDING, FENCE, OR AIRPORT STRUCTURE. AREA SHALL BE CLEAR OF STOCKPILES, MATERIAL OR EQUIPMENT.
L. AT ALL TIMES THE CONTRACTOR SHALL TAKE PRECAUTIONS NECESSARY TO PROTECT STRUCTURES AND TREES ADJACENT TO WORK AREA. ANY DAMAGE CAUSED BY THE CONTRACTORS OPERATIONS SHALL BE REPAIRED TO THE SATISFACTION OF THE ENGINEER, AT THE CONTRACTORS SOLE EXPENSE.
M. ANY WORK WITHIN ACTIVE TSA SHALL BE COORDINATED WITH OWNER, ENGINEER, AND RPR.
N. CREATE 1-1/2" DROP WHERE GRADING ALONG ALL PAVED SURFACES.
O. MATCH EXISTING ELEVATIONS ALONG BUILDINGS AND EXISTING PAVEMENT.
P. CONTRACTOR IS TO USE CAUTION DURING CONSTRUCTION TO PROTECT EXISTING TAXIWAY SIGNS, LIGHTS, NAVIGATIONAL AIDS, AND OTHER AIRPORT STRUCTURES.
Q. LOCATION OF EXISTING GAS AND ELECTRICAL LINES ARE APPROXIMATE AND NOT FROM SURVEY. CONTRACTOR WILL BE RESPONSIBLE FOR CONTACTING DIG TESS, THE CITY OF MIDLAND, THE AIRPORT, AND UTILITY OWNERS TO CONFIRM LOCATION OF ALL UTILITIES. PRECAUTIONS SHALL BE TAKEN TO PROTECT EXISTING UTILITIES AND OTHER INFRASTRUCTURE.
R. ISOLATE ALL PAVEMENT TO BE REMOVED BY SAW CUTTING, FORMING A CLEAN, STRAIGHT EDGE.
S. CONTRACTOR TO PROTECT EXISTING BOLLARDS, WELL CAPS, ELECTRICAL BOXES, AND OTHER INFRASTRUCTURE DURING DEMOLITION.
T. CONTRACTOR SHALL TAKE NECESSARY MEASURES TO PROTECT EXISTING STRUCTURES (BUILDINGS, FENCE, UTILITIES, ETC.). ANY DAMAGE SHALL BE REPAIRED AT THE CONTRACTORS SOLE EXPENSE.
U. ALL MARKINGS SHALL BE IN ACCORDANCE WITH THE LATEST CHANGE OF FAA AC 150/5340-1.
V. USE GLASS BEADS, AS SPECIFIED, IN ALL MARKINGS.
W. ALL NEW MARKING WILL BE PAID FOR AT THE CONTRACT UNIT PRICE PER SQUARE FOOT FOR NEW MARKINGS.
X. VERIFY LIMITS WITH ENGINEER PRIOR TO BEGINNING DEMOLITION.
Y. ANY DAMAGE TO EXISTING RUNWAY, APRON, CONNECTING STUB TAXIWAY PAVEMENT WILL BE REPAIRED AT CONTRACTOR'S EXPENSE.
Z. CONTRACTOR SHALL REQUIRE A PAVEMENT SWEEPER AT INTERSECTION OF RUNWAY AND PARTIAL PARALLEL TAXIWAY DURING TIMES OF MATERIAL TRANSFER NEAR RUNWAY TO ENSURE ANY FOREIGN OBJECT DEBRIS TO BE CLEARED AFTER CONSTRUCTION EQUIPMENT CROSSES.

KEY NOTES

AS INDICATED BY: (00)

1. LOW PROFILE BARRICADES (SPACED AT 4 FT). PLACE BARRICADES AS INDICATED. BARRICADES INTENDED TO ALERT AIRCRAFT TRAFFIC OF CONSTRUCTION ZONE. SEE DETAIL B4/G-010.
2. INSTALL TEMPORARY ORANGE CONSTRUCTION SIGNS WITH "CONSTRUCTION AHEAD" MESSAGING IN ACCORDANCE WITH APPENDIX F, FIGURE F-1 IN AC 150/5370-2 ADDRESSING TRAFFIC IN BOTH DIRECTIONS. SEE DETAIL B1/G-010INSTALL YIELD TO AIRCRAFT SIGN. SEE DETAIL D1/G-010.
3. CLOSED TAXIWAY CROSSES. SEE DETAIL G-010.

CONTRACT TIME NOTES

A. ALL WORK SHALL BE COMPLETED WITHIN 100 CALENDAR DAYS OF THE NOTICE TO PROCEED.
B. TAXIWAY A WILL BE CLOSED WHILE WORK PERFORMED ON TAXIWAY E WHEN INSIDE OF TSA.
C. WORK WILL BE PHASED TO MINIMIZE TAXIWAY A CLOSURE AND MAXIMIZE ACCESS TO HANGARS.
D. CONTRACTOR WILL BE GENERALLY ALLOWED TO PROSECUTE WORK ON THE AIRFIELD AT HIS DISCRETION, WITHIN THE FOLLOWING RESTRICTIONS, AND AS APPROVED BY THE ENGINEER, OWNER AND AIRPORT OPERATIONS. CONTRACTOR SHALL CLOSELY COORDINATE SPECIFIC CONSTRUCTION PHASES WITH THE ENGINEER AND OWNER.
E. NOTAMS CLOSING TAXIWAY A SHALL BE IN PLACE 3 DAYS BEFORE CLOSING THE TAXIWAY. DURING CONSTRUCTION PHASES WHEN THE TAXIWAY IS CLOSED, THE CONTRACTOR SHALL CONCENTRATE EFFORTS ON EFFICIENTLY COMPLETING WORK ON THE TAXIWAY TO MINIMIZE THE LENGTH OF THE RUNWAY CLOSURE. WHILE THE TAXIWAY IS CLOSED, THE CONTRACTOR SHALL INSTALL AND MAINTAIN BARRICADES, AT LOCATIONS SHOWN, TO PROHIBIT AIRCRAFT ACCESS FROM THE HANGAR AND APRON AREAS. CONTRACTOR SHALL ALSO INSTALL AND MAINTAIN TEMPORARY TAXIWAY CLOSED "Xs" WHILE TAXIWAY IS CLOSED.

PHASE 1 (60 DAYS)

1. TAXIWAY A TO REMAIN ACTIVE DURING THIS PHASE.
2. INSTALL LOW-PROFILE BARRICADES AND OTHER SAFETY MEASURES AS SHOWN ON PLAN DETAILS.
3. NO AIRCRAFT ACCESS TO HANGAR, APRON DURING THIS TIME.
4. DEMOLISH AND STOCKPILE EXISTING ASPHALT TAXIWAY AND APRON, TAXIWAY EDGE LIGHTS, TAXIWAY SIGNS/ FOUNDATION.
5. REMOVE AND STOCKPILE UNPAVED AREA FOR TAXIWAY E CONSTRUCTION UP TO TAXIWAY A SAFETY AREA.
6. CONSTRUCT PHASE 1 PAVEMENT TO TOP OF BASE COURSE, INCLUDING REMOVAL OF EXISTING DRAINAGE PIPE AND EXTENSION OF NEW 42 INCH AND 27 INCH DRAINAGE PIPES AND SAFETY END TREATMENTS.
7. COMPLETE GRADING ALONG PAVEMENT EDGE TIME.
8. ALL PAVEMENT MARKINGS/PAINTS SHALL BE COMPLETED AFTER ALL PAVEMENT CONSTRUCTION ITEMS HAVE BEEN COMPLETED.
9. PROTECT TAXIWAY/TAXILANE PAVEMENT EDGE AT ALL TIMES.

PACKET 10.361

July 11, 2023

Parkhill

THIS DOCUMENT IS RELEASED ON 06/26/2023 FOR THE PURPOSE OF INTERIM REVIEW UNDE THE AUTHORITY OF BIJAN T. JAMALABAD, P.E. TEXAS LICENSE #88531. IT IS NOT TO BE USEI FOR REGULATORY APPROVAL, CONSTRUCTIO BIDDING OR PERMIT PURPOSES.
PARKHILL, SMITH & COOPER, INC. F-580

Parkhill.com

Midland International Air & Space Port

Taxiway E Reconstruction

Midland International Air & Space Port

CLIENT
MIDLAND INTERNATIONAL AIR & SPACE PORT
9506 La Force Blvd
Midland, Texas 79706

PROJECT NO.
01.6235.22

#	DATE	DESCRIPTION
3	6/26/2023	Bid Set
2	05/05/2023	Final Design
1	05/05/2023	Preliminary Engineering Report

Constuction Safety & Phasing Plan (Phase 1)

G-008

FILE NAME: A:\2022\6235.22\03_DSGN\01_DWG\010_GEN\G-008-6235.dwg LAYOUT NAME: G-008 PRINTED: Tuesday, June 27, 2023 - 5:51pm USER: LPalle

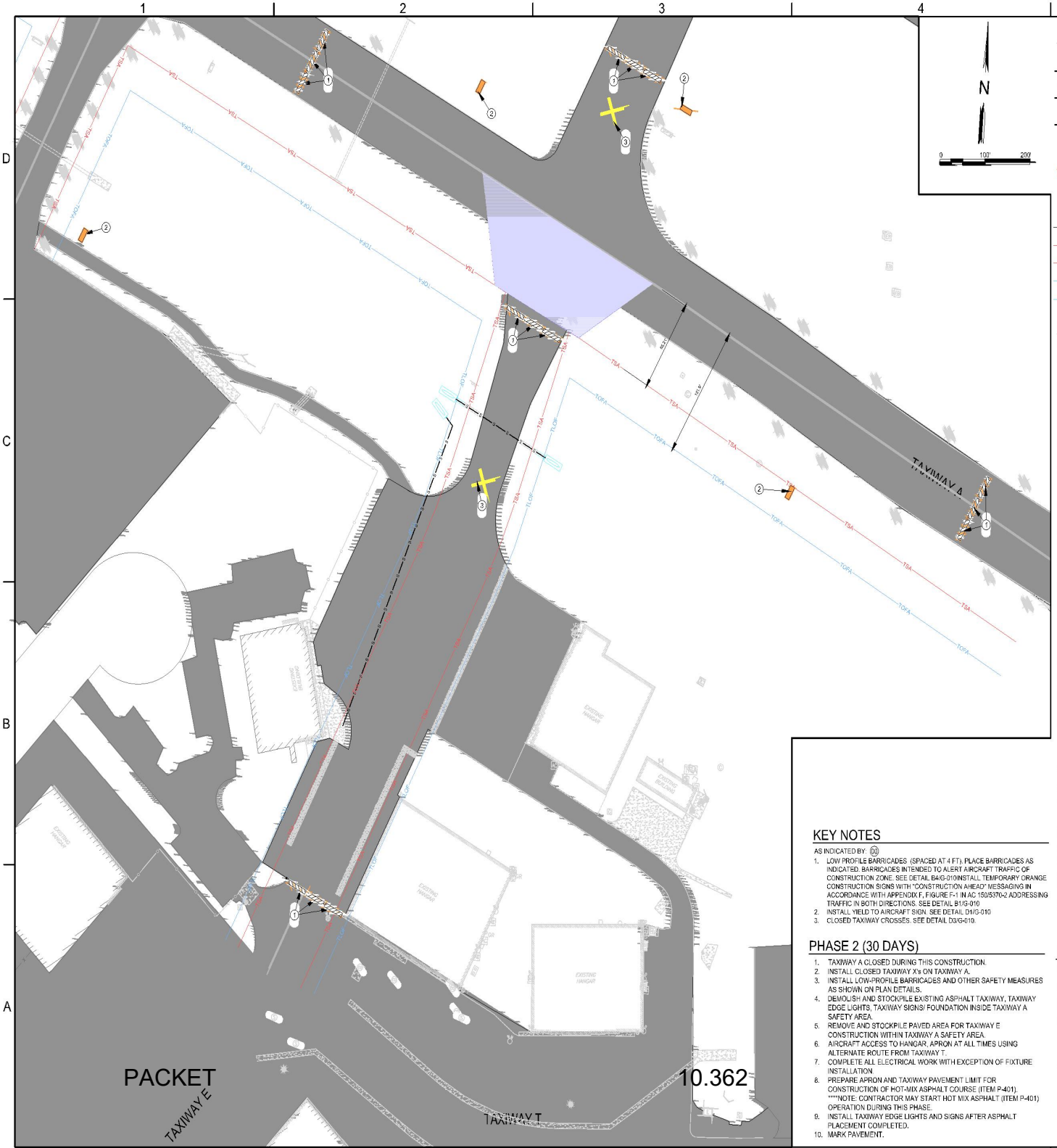

LEGEND

- PHASE 1
- EXISTING PAVEMENT TO REMAIN
- EXISTING BUILDING
- ORANGE "CONSTRUCTION AHEAD" SIGN (B1/G-011)
- YIELD TO AIRCRAFT SIGN (D1/G-011)
- LOW-PROFILE AVIATION BARRICADE (B4/G-011)
- EXISTING CLOSED TO AIRCRAFT "X" MARKING
- ACTIVE TAXIWAY / TAXILANE
- Xx EXISTING FENCE TO REMAIN
- UGEx EXISTING UNDERGROUND ELECTRIC
- TSA TAXIWAY SAFETY AREA
- TOFA TAXILANE OBJECT FREE AREA
- TOFA TAXIWAY OBJECT FREE AREA

GENERAL NOTES

A. THIS PAGE IS INTENDED TO BE PRINTED IN COLOR. IF NOT, CONTACT ENGINEER AS SOON AS POSSIBLE.
B. THIS PLAN IS INTENDED TO GIVE THE CONTRACTOR AN UNDERSTANDING OF THE PHASING GOALS. ANY DEVIATION, HOWEVER, SHALL BE APPROVED BY AND ENGINEER PRIOR TO THE PRECONSTRUCTION MEETING.
C. SCHEDULE IS IN CALENDAR DAYS. ALLOWABLE CALENDAR DAYS INCLUDE HOLIDAYS AND WEEKENDS. WEATHER DAYS OVER AND/OR ABOVE THE HISTORICAL NORM CAN BE CREDITED IF JUSTIFIED AND AGREED UPON BY THE ENGINEER AND AGENT.
D. CONTRACTOR SHALL MEET ALL SCHEDULE AND PHASING GOALS. SEE GOALS LISTED ON PHASING PLAN.
E. TOTAL CONTRACT TIME OF 100 CALENDAR DAYS IS BASED ON THE NUMBER OF DAYS ALLOTTED TO COMPLETE PHASES 1 AND 2 INCLUDING CURE TIME AND COMPLETION OF PUNCH LIST.
F. INSTALL AVIATION BARRICADE ACROSS ALL AIRCRAFT MOVEMENT AREAS ADJACENT TO CONSTRUCTION AREAS WITH ONE OR A COMBINATION OF DETAIL B4/G-010. INSTALL OUTSIDE TAXIWAY SAFETY AREA, OR ALONG EDGE OF APRON.
G. THE CONTRACTOR SHALL MAINTAIN ALL AIRSIDE PAVEMENTS FREE OF CONSTRUCTION DEBRIS. IF EQUIPMENT IS ROUTED ACROSS PAVEMENT, SWEEP THE PAVEMENT AS NEEDED TO ENSURE AIRCRAFT SAFETY.
H. AIRCRAFT ALWAYS HAVE THE RIGHT-OF-WAY.
I. MARK AND LIGHT CONSTRUCTION AREAS AND VEHICLES AS REQUIRED IN LATEST EDITION OF AC 150/5370-2.
J. WORK AREA BOUNDARY IN ALL UNPAVED AREAS SHALL BE MARKED WITH LATHS OR ORANGE SAFETY FENCE. LATHS SHALL BE PLACED AT 10FT SPACING.
K. CONTRACTOR SHALL MAINTAIN A 10FT CLEAR AREA ADJACENT TO BUILDING, FENCE, OR AIRPORT STRUCTURE. AREA SHALL BE CLEAR OF STOCKPILES, MATERIAL OR EQUIPMENT.
L. AT ALL TIMES THE CONTRACTOR SHALL TAKE PRECAUTIONS NECESSARY TO PROTECT STRUCTURES AND TREES ADJACENT TO WORK AREA. ANY DAMAGE CAUSED BY THE CONTRACTORS OPERATIONS SHALL BE REPAIRED TO THE SATISFACTION OF THE ENGINEER, AT THE CONTRACTORS SOLE EXPENSE.
M. ANY WORK WITHIN ACTIVE TSA SHALL BE COORDINATED WITH OWNER, ENGINEER, AND RPR.
N. CREATE 1-1/2" DROP WHERE GRADING ALONG ALL PAVED SURFACES.
O. MATCH EXISTING ELEVATIONS ALONG BUILDINGS AND EXISTING PAVEMENT
P. CONTRACTOR IS TO USE CAUTION DURING CONSTRUCTION TO PROTECT EXISTING TAXIWAY SIGNS, LIGHTS, NAVIGATIONAL AIDS, AND OTHER AIRPORT STRUCTURES.
Q. LOCATION OF EXISTING GAS AND ELECTRICAL LINES ARE APPROXIMATE AND NOT FROM SURVEY. CONTRACTOR WILL BE RESPONSIBLE FOR CONTACTING DIG TESS, THE CITY OF MIDLAND, THE AIRPORT, AND UTILITY OWNERS TO CONFIRM LOCATION OF ALL UTILITIES. PRECAUTIONS SHALL BE TAKEN TO PROTECT EXISTING UTILITIES AND OTHER INFRASTRUCTURE.
R. ISOLATE ALL PAVEMENT TO BE REMOVED BY SAW CUTTING, FORMING A CLEAN, STRAIGHT EDGE.
S. CONTRACTOR TO PROTECT EXISTING BOLLARDS, WELL CAPS, ELECTRICAL BOXES, AND OTHER INFRASTRUCTURE DURING DEMOLITION.
T. CONTRACTOR SHALL TAKE NECESSARY MEASURES TO PROTECT EXISTING STRUCTURES (BUILDINGS, FENCE, UTILITIES, ETC.). ANY DAMAGE SHALL BE REPAIRED AT THE CONTRACTORS SOLE EXPENSE.
U. ALL MARKINGS SHALL BE IN ACCORDANCE WITH THE LATEST CHANGE OF FAA AC 150/5340-1.
V. USE GLASS BEADS, AS SPECIFIED, IN ALL MARKINGS.
W. ALL NEW MARKING WILL BE PAID FOR AT THE CONTRACT UNIT PRICE PER SQUARE FOOT FOR NEW MARKINGS.
X. VERIFY LIMITS WITH ENGINEER PRIOR TO BEGINNING DEMOLITION.
Y. ANY DAMAGE TO EXISTING RUNWAY, APRON, CONNECTING STUB TAXIWAY PAVEMENT WILL BE REPAIRED AT CONTRACTOR'S EXPENSE.
Z. CONTRACTOR SHALL REQUIRE A PAVEMENT SWEEPER AT INTERSECTION OF RUNWAY AND PARTIAL PARALLEL TAXIWAY DURING TIMES OF MATERIAL TRANSFER NEAR RUNWAY TO ENSURE ANY FOREIGN OBJECT DEBRIS TO BE CLEARED AFTER CONSTRUCTION EQUIPMENT CROSSES.

KEY NOTES

AS INDICATED BY: (#)

1. LOW PROFILE BARRICADES (SPACED AT 4 FT). PLACE BARRICADES AS INDICATED. BARRICADES INTENDED TO ALERT AIRCRAFT TRAFFIC OF CONSTRUCTION ZONE. SEE DETAIL B4/G-010INSTALL TEMPORARY ORANGE CONSTRUCTION SIGNS WITH "CONSTRUCTION AHEAD" MESSAGING IN ACCORDANCE WITH APPENDIX F, FIGURE F-1 IN AC 150/5370-2 ADDRESSING TRAFFIC IN BOTH DIRECTIONS. SEE DETAIL B1/G-010
2. INSTALL YIELD TO AIRCRAFT SIGN. SEE DETAIL D1/G-010
3. CLOSED TAXIWAY CROSSES. SEE DETAIL D3/G-010.

PHASE 2 (30 DAYS)

1. TAXIWAY A CLOSED DURING THIS CONSTRUCTION.
2. INSTALL CLOSED TAXIWAY X's ON TAXIWAY A.
3. INSTALL LOW-PROFILE BARRICADES AND OTHER SAFETY MEASURES AS SHOWN ON PLAN DETAILS.
4. DEMOLISH AND STOCKPILE EXISTING ASPHALT TAXIWAY, TAXIWAY EDGE LIGHTS, TAXIWAY SIGNS/ FOUNDATION INSIDE TAXIWAY A SAFETY AREA.
5. REMOVE AND STOCKPILE PAVED AREA FOR TAXIWAY E CONSTRUCTION WITHIN TAXIWAY A SAFETY AREA.
6. AIRCRAFT ACCESS TO HANGAR, APRON AT ALL TIMES USING ALTERNATE ROUTE FROM TAXIWAY T.
7. COMPLETE ALL ELECTRICAL WORK WITH EXCEPTION OF FIXTURE INSTALLATION.
8. PREPARE APRON AND TAXIWAY PAVEMENT LIMIT FOR CONSTRUCTION OF HOT-MIX ASPHALT COURSE (ITEM P-401). ****NOTE: CONTRACTOR MAY START HOT MIX ASPHALT (ITEM P-401) OPERATION DURING THIS PHASE.
9. INSTALL TAXIWAY EDGE LIGHTS AND SIGNS AFTER ASPHALT PLACEMENT COMPLETED.
10. MARK PAVEMENT.

CONTRACT TIME NOTES

A. ALL WORK SHALL BE COMPLETED WITHIN 100 CALENDAR DAYS OF THE NOTICE TO PROCEED.
B. TAXIWAY A WILL BE CLOSED WHILE WORK PERFORMED ON TAXIWAY E WHEN INSIDE OF TSA.
C. WORK WILL BE PHASED TO MINIMIZE TAXIWAY A CLOSURE AND MAXIMIZE ACCESS TO HANGARS.
D. CONTRACTOR WILL BE GENERALLY ALLOWED TO PROSECUTE WORK ON THE AIRFIELD AT HIS DISCRETION, WITHIN THE FOLLOWING RESTRICTIONS, AND AS APPROVED BY THE ENGINEER, OWNER AND AIRPORT OPERATIONS. CONTRACTOR SHALL CLOSELY COORDINATE SPECIFIC CONSTRUCTION PHASES WITH THE ENGINEER AND OWNER.
E. NOTAMS CLOSING TAXIWAY A SHALL BE IN PLACE 3 DAYS BEFORE CLOSING THE TAXIWAY. DURING CONSTRUCTION, WHEN TAXIWAY A IS CLOSED, THE CONTRACTOR SHALL CONCENTRATE EFFORTS ON EFFICIENTLY COMPLETING WORK ON THE TAXIWAY TO MINIMIZE THE LENGTH OF THE RUNWAY CLOSURE. WHILE THE TAXIWAY IS CLOSED, THE CONTRACTOR SHALL INSTALL AND MAINTAIN BARRICADES, AT LOCATIONS SHOWN, TO PROHIBIT AIRCRAFT ACCESS FROM THE HANGAR AND APRON AREAS. CONTRACTOR SHALL ALSO INSTALL AND MAINTAIN TEMPORARY TAXIWAY CLOSED "Xs" WHILE TAXIWAY IS CLOSED.

PACKET 10.362 July 11 2023

THIS DOCUMENT IS RELEASED ON 06/26/2023 FOR THE PURPOSE OF INTERIM REVIEW UNDE THE AUTHORITY OF BIJAN T. JAMALABAD, P.E. TEXAS LICENSE #88531. IT IS NOT TO BE USEI FOR REGULATORY APPROVAL, CONSTRUCTIO BIDDING OR PERMIT PURPOSES.
PARKHILL, SMITH & COOPER, INC. F-580

Parkhill

Parkhill.com

Midland International Air & Space Port

Taxiway E Reconstruction

Midland International Air & Space Port

CLIENT
MIDLAND INTERNATIONAL AIR & SPACE PORT
9506 La Force Blvd
Midland, Texas 79706

PROJECT NO.
01 6235 22

#	DATE	DESCRIPTION
3	6/26/2023	Bid Set
2	05/05/2023	Final Design
1	05/05/2023	Preliminary Engineering Report

Construction Safety & Phasing Plan (Phase 2)

G-009

FILE NAME: A:\2022\6235.22\03_DSGN\01_DWG\010_GEN\G-009-6235.dwg LAYOUT NAME: G-009 PRINTED: Tuesday, June 27, 2023 - 5:51pm USER: LPate

APPENDIX B: SAFETY DETAILS

GENERAL NOTES

1. BARRICADE TO SHOW SIGN FACING VEHICLE TRAFFIC.
2. IT SHALL BE PLACED ON BOTH SIDES OF HAUL ROUTES OUTSIDE OF AIRCRAFT MOVEMENT AREAS.
3. SECURE BARRICADE / SIGN FROM OVERTURNING.

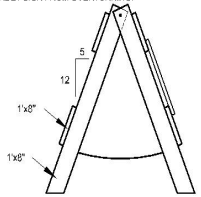

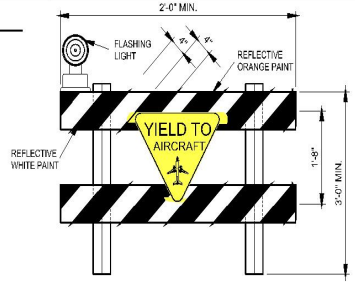

A-FRAME BARRICADE
NO SCALE

D1 YIELD TO AIRCRAFT DETAIL
SCALE: NTS

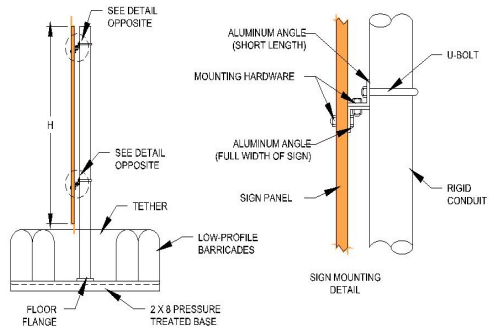

C1 SIGN SECURED BY LOW PROFILE BARRICADES
NO SCALE

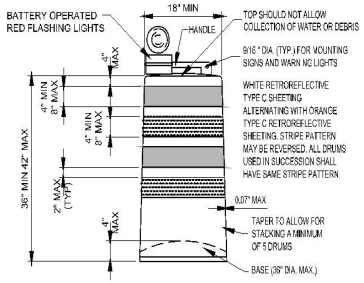

COLOR SEQUENCE OF REFLECTIVE SHEETING MAY BE REVERSED.

C3 CONSTRUCTION BARREL
NO SCALE

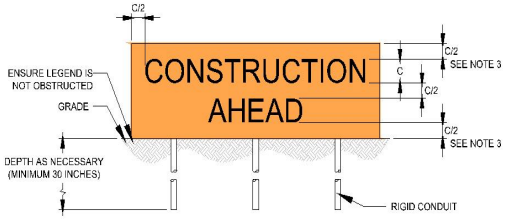

NOTES:
1. TEMPORARY SIGNS SHALL MEET FULL REQUIREMENTS OF AC 150/5345-44 AND FAA ENGINEERING BRIEF (EB) NO.93.
2. OFFSET FROM CORRESPONDING TAXIWAY PAVEMENT EDGE SHALL BE IN ACCORDANCE WITH TABLE 1-1 FROM FAA AC 150/5340-18. SIGN IS TO BE CONSIDERED "SIZE 2".
3. CHARACTER HEIGHT (C) SHALL BE 6" PER SECTION 7.1 OF EB NO.93.
4. SIGNS SHALL MEET MODE 1 CRITERIA PER SECTION 1.2.5 AND 3.2.4.6 OF AC 150/5345-44.
5. SIGNS SHALL MEET THE REQUIREMENTS OF SECTION 3.2.6.2 OF AC 150/5345-44.
6. SIGNS SHALL NOT HAVE AN INSTALLED HEIGHT EXCEEDING 36".
7. SIGNS TO BE MOUNTED AS GRADE OR AS CLOSE TO GRADE AS POSSIBLE. CONTRACTOR WILL BE REQUIRED TO PROVIDE FRANGIBLE SUPPORTS PER AC 150/5345-44.

B1 "CONSTRUCTION AHEAD" SIGN
NO SCALE

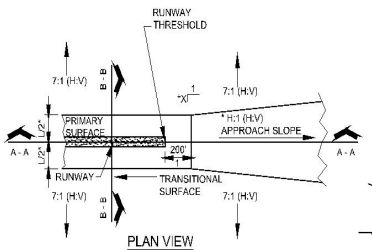

PLAN VIEW

NOTES:
FOR HORIZONTAL APPROACH SLOPE (H), DISTANCE (L), AND FLARE RATIO (X), SEE TABLE BELOW.

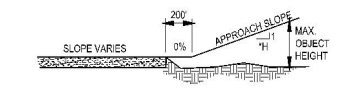

SECTION A-A
NO SCALE

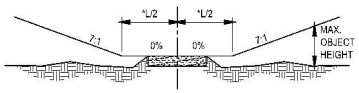

SECTION B-B
NO SCALE

IMAGINARY SURFACES NOTES:
1. FOR HORIZONTAL APPROACH SLOPE (H), DISTANCE (L), AND FLARE RATIO (X), SEE TABLE BELOW.
2. UNDER FAIR WEATHER CONDITONS, THE APPROACH SLOPE FOR TEMPORARY RELOCATED THRESHOLDS BEGINS AT THE THRESHOLD.

APPROACH SURFACE

RUNWAY	APPROACH SLOPE (H)	L	X
10	20	400	0.4
28	20	400	0.4
16R	20	400	0.4
34L	20	400	0.4

A1 FAR PART 77 IMAGINARY SURFACES
NO SCALE

14 CFR PART 77

NOTES:
1. CROSSES SHALL BE PLACED ON ALL TAXIWAYS TO BE TEMPORARILY CLOSED.
2. MARKING SHALL BE PLACED AT EACH ENTRANCE OF THE CLOSED TAXIWAY.
3. MARKING OF HAZARDOUS AREAS DUE TO CONSTRUCTION, WHICH NO PART OF THE AIRCRAFT MAY ENTER, ARE MARKED IN ACCORDANCE WITH AC 150/5370-2
4. CROSSES SHALL BE CONSTRUCTED OF FABRIC, PLYWOOD OR SIMILAR MATERIAL.
5. CROSSES SHALL BE AVIATION YELLOW COLOR.
6. LIGHTED BARRICADES, PER DETAIL A5. ON THIS SHEET, SHALL BE PLACED ON EACH END OF TEMPORARILY CLOSED TAXIWAYS & RUNWAYS AS DIRECTED BY THE ENGINEER.

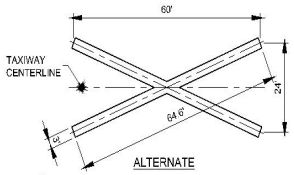

ALTERNATE

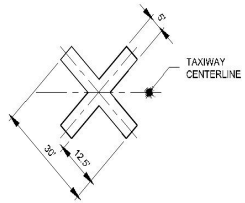

D3 CLOSED TAXIWAY CROSSES
SCALE: NTS

GENERAL CONSTRUCTION SAFETY AND PHASING NOTES

1. THE CONTRACTOR SHALL MAKE HIS OWN PROVISIONS FOR WATER, ELECTRICAL NATURAL GAS AND OTHER REQUIREMENTS AND SHALL PAY FOR WATER, ELECTRICITY, GAS OR FUEL CONSUMED DURING THE CONSTRUCTION OF THE PROJECT. THE CONTRACTOR SHALL CONSTRUCT HIS OWN SERVICE LINES AND SUCH CONSTRUCTION SHALL BE IN STRICT ACCORDANCE WITH ALL APPLICABLE CODES AND LAWS.
2. HAUL ROUTES SHALL NOT BE ALONG OR ACROSS ANY PAVED AIRPORT STREET, ROAD, APRON, TAXIWAY OR RUNWAY WITHOUT SPECIFIC WRITTEN AUTHORIZATION FROM THE AIRPORT ADMINISTRATION, EXCEPT AS SHOWN. ANY DAMAGE INCURRED BY THE CONTRACTOR'S EQUIPMENT SHALL BE REPAIRED BY AND AT THE EXPENSE OF THE CONTRACTOR AND AS REQUIRED BY THE ENGINEER AND MAF. THE CONTRACTOR SHALL MAINTAIN THE PAVED SURFACES, WHICH ARE ALLOWED TO BE USED AS HAULING ROUTES OR ACCESS ROUTES TO THE SITE, IN A CLEAN CONDITION, SUITABLE FOR USE AS DETERMINED BY AND MAF.
3. THE CONTRACTOR SHALL PROVIDE, ERECT AND MAINTAIN ALL NECESSARY BARRICADES, SIGNS, DANGER SIGNALS AND LIGHTS FOR THE PROTECTION OF THE WORK AND THE SAFETY OF THE PUBLIC FOR BOTH LAND AND AIR TRAFFIC. SUITABLE WARNING SIGNS AND BARRICADES SHALL BE ILLUMINATED AT NIGHT BY ACCEPTABLE LIGHT UNITS.
4. THE CONTRACTOR SHALL SCHEDULE HIS WORK WELL IN ADVANCE OF ACTUAL OPERATIONS AND SHALL KEEP THE AIRPORT ADVISED OF THE SCHEDULE SO THAT CLOSE COORDINATION CAN BE MAINTAINED WITH THE AIRPORT USERS AND WITH OTHER CONTRACTORS. AT LEAST (3) CALENDAR DAYS NOTICE WILL BE REQUIRED BEFORE CLOSING ANY PORTION OF A TAXIWAY, APRON OR RUNWAY. NOTICE TO AIRMEN (NOTAMS) REQUIRED FOR VARIOUS CONSTRUCTION OPERATIONS WILL BE FILED BY THE AIRPORT. COORDINATE ALL CONSTRUCTION ACTIVITIES WITH RPR AND MAF OPERATIONS FOR PLACING APPLICABLE NOTAM(S).
5. THE CONTRACTOR SHALL EXERT EVERY EFFORT TO MAINTAIN THE SAFETY OF THE AIRCRAFT TRAFFIC AND THE GENERAL PUBLIC AND SHALL ACQUAINT HIMSELF WITH THE RULES AND REGULATIONS CONCERNING AIRCRAFT TRAFFIC SAFETY. THE REQUIREMENTS OF FAA ADVISORY CIRCULAR 150/5370-2(LATEST REVISION), OPERATIONAL SAFETY ON AIRPORTS DURING CONSTRUCTION WILL BE MAINTAINED. VIOLATIONS OF THE SAFETY RULES BY THE CONTRACTOR'S WORKMEN SHALL RESULT IN THE DISCHARGE OF SUCH MEN IN ACCORDANCE WITH THE PROJECT SPECIFICATIONS. CONTINUED VIOLATION OF THE SAFETY RULES AND REGULATIONS BY THE CONTRACTOR, AFTER HAVING BEEN NOTIFIED OF SUCH VIOLATIONS BY THE ENGINEER, SHALL CONSTITUTE GROUNDS FOR SUSPENDING THE CONTRACTOR'S OPERATIONS UNTIL STEPS ARE TAKEN THAT WILL INSURE A SAFE OPERATION.
6. CONSTRUCTION ACTIVITIES WITHIN TAXIWAY OR APRON SAFETY AREAS WHEN THE TAXIWAY IS OPEN TO AIRCRAFT TRAFFIC SHALL BEGIN ONLY AFTER APPROVAL OF THE ENGINEER AND EQUIPMENT AND MATERIAL SHALL BE MAINTAINED. EXCAVATIONS, DITCHES OR TRENCHES OR OTHER CONDITIONS SHALL BE CONSPICUOUSLY MARKED AND LIGHTED AS SPECIFIED.
7. THE CONTRACTOR SHALL MINIMIZE AS MUCH AS POSSIBLE THE POTENTIAL DAMAGE TO THE CONTRACTOR'S ACCESS ROUTE. ANY DAMAGE TO THE ACCESS ROUTE BY THE CONTRACTOR WILL BE REPAIRED AT THE CONTRACTOR'S COST.
8. ALL EQUIPMENT AND MATERIAL SHALL BE MAINTAINED BELOW THE IMAGINARY SURFACES AT ALL TIMES.
9. CONTRACTOR TO COMPLY WITH REQUIREMENTS OF FAA AIRSPACE SAFETY.
10. CONTRACTOR TO MAINTAIN ACCESS TO ADJACENT HANGARS AT ALL TIMES DURING CONSTRUCTION.
11. CONTRACTOR TO MAINTAIN AN AOA SECURE FENCING AT ALL TIMES DURING CONSTRUCTION. ALL CONTRACTOR EMPLOYEES TO BE SUPERVISED BY MAF BADGED OFFICIAL AT ALL TIMES DURING CONSTRUCTION PERIOD.

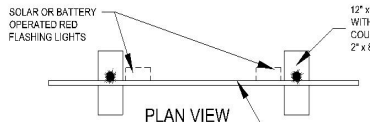

PLAN VIEW
NO SCALE

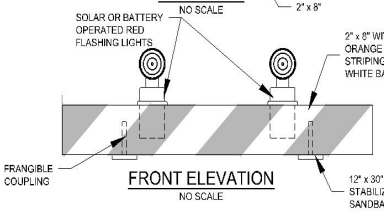

FRONT ELEVATION
NO SCALE

BARRICADE NOTES
1. BARRICADES ARE TO BE PLACED AROUND ALL AREAS CLOSED TO AIRCRAFT TRAFFIC. BARRICADE SPACING SHALL BE AS REQUIRED BY THE LATEST EDITION OF FAA AC150/5370-2
2. BARRICADES SHALL BE CHECKED DAILY FOR PROPER PLACEMENT AND OPERATION.
3. FOR ALL LOCATIONS WHERE BARRICADES ARE TO INSTALLED ACROSS RUNWAY OR TAXIWAY EXTEND BARRICADES FROM EDGE LIGHT LINE TO EDGE LIGHT LINE. MAINTAIN ONE 5' GAP EITHER SIDE OF CENTERLINE FOR VEHICLE PASSAGE.
4. CONTRACTOR SHALL PROVIDE MEANS OF RESTRAINING BARRICADES TO ENSURE THEY ARE NOT MOVED BY WIND OR JET BLAST.
5. FAA-APPROVED MANUFACTURED BARRICADES ARE ACCEPTABLE ALTERNATIVES TO DETAIL SHOWN.

B4 LIGHTED LOW PROFILE AVIATION BARRICADE
NO SCALE

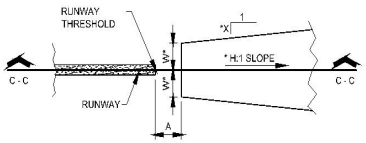

PLAN VIEW

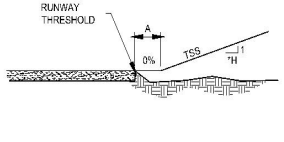

SECTION C - C

THRESHOLD SITING SURFACE

RUNWAY	SLOPE (H)	A	W	X
10	29	200	500	0.460
28	29	200	500	0.460
16R	29	200	500	0.460
34L	29	200	500	0.460

RUNWAY SAFETY AREA

RUNWAY	WIDTH	LENGTH BEYOND END OF RUNWAY
16R / 34L	500'	1000'
10 / 28	500'	1000'

A4 THRESHOLD SITING SURFACE
NO SCALE

AC 150/5300-13B

PACKET 10.364 July 11, 2023

Parkhill

THIS DOCUMENT IS RELEASED ON 06/26/2023 FOR THE PURPOSE OF INTERIM REVIEW UNDE THE AUTHORITY OF BIJAN T. JAMALABAD, P.E. TEXAS LICENSE #88531. IT IS NOT TO BE USED FOR REGULATORY APPROVAL, CONSTRUCTIO BIDDING OR PERMIT PURPOSES.
PARKHILL, SMITH & COOPER, INC. F-560

Parkhill.com

Midland International Air & Space Port
Taxiway E Reconstruction

Midland International Air & Space Port

CLIENT
MIDLAND INTERNATIONAL AIR & SPACE PORT
9506 La Force Blvd
Midland, Texas 79706

PROJECT NO.
01 6235.22

#	DATE	DESCRIPTION
3	6/26/2023	Bid Set
2	05/05/2023	Final Design
1	05/05/2023	Preliminary Engineering Report

Construction Safety & Phasing Plan Details

G-010

FILE NAME: A:\2022\6235.22\03_DSGN\01_DWG\01_GEN\G-010-6235.dwg LAYOUT NAME: G-010 PRINTED: Tuesday, June 27, 2023 - 5:51pm USER: LPate

APPENDIX C: ADVISORY CIRCULAR 150/5370-2G, OPERATIONAL SAFETY ON AIRPORTS DURING CONSTRUCTION

All contractors and subcontractors responsible for implementation of this CSPP must review all relevant sections of the FAA AC 150/5370-2G, Operating Safety on Airports During Construction prior to commencement of construction.

See here for link to the full Advisory Circular PDF:
https://www.faa.gov/documentLibrary/media/Advisory_Circular/150-5370-2G.pdf

APPENDIX D: FAA FORM 7460-1, NOTICE OF PROPOSED CONSTRUCTION OR ALTERATION (BLANK)

NOTICE OF PROPOSED CONSTRUCTION OR ALTERATION

§ 77.7 Form and time of notice.

(a) If you are required to file notice under §77.9, you must submit to the FAA a completed FAA Form 7460–1, Notice of Proposed Construction or Alteration. FAA Form 7460–1 is available at FAA regional offices and on the Internet.

(b) You must submit this form at least 45 days before the start date of the proposed construction or alteration or the date an application for a construction permit is filed, whichever is earliest.

(c) If you propose construction or alteration that is also subject to the licensing requirements of the Federal Communications Commission (FCC), you must submit notice to the FAA on or before the date that the application is filed with the FCC.

(d) If you propose construction or alteration to an existing structure that exceeds 2,000 ft. in height above ground level (AGL), the FAA presumes it to be a hazard to air navigation that results in an inefficient use of airspace. You must include details explaining both why the proposal would not constitute a hazard to air navigation and why it would not cause an inefficient use of airspace.

(e) The 45-day advance notice requirement is waived if immediate construction or alteration is required because of an emergency involving essential public services, public health, or public safety. You may provide notice to the FAA by any available, expeditious means. You must file a completed FAA Form 7460–1 within 5 days of the initial notice to the FAA. Outside normal business hours, the nearest flight service station will accept emergency notices.

§ 77.9 Construction or alteration requiring notice.

If requested by the FAA, or if you propose any of the following types of construction or alteration, you must file notice with the FAA of:

(a) Any construction or alteration that is more than 200 ft. AGL at its site.

(b) Any construction or alteration that exceeds an imaginary surface extending outward and upward at any of the following slopes:

(1) 100 to 1 for a horizontal distance of 20,000 ft. from the nearest point of the nearest runway of each airport described in paragraph (d) of this section with its longest runway more than 3,200 ft. in actual length, excluding heliports.

(2) 50 to 1 for a horizontal distance of 10,000 ft. from the nearest point of the nearest runway of each airport described in paragraph (d) of this section with its longest runway no more than 3,200 ft. in actual length, excluding heliports.

(3) 25 to 1 for a horizontal distance of 5,000 ft. from the nearest point of the nearest landing and takeoff area of each heliport described in paragraph (d) of this section.

(c) Any highway, railroad, or other traverse way for mobile objects, of a height which, if adjusted upward 17 feet for an Interstate Highway that is part of the National System of Military and Interstate Highways where overcrossings are designed for a minimum of 17 feet vertical distance, 15 feet for any other public roadway, 10 feet or the height of the highest mobile object that would normally traverse the road, whichever is greater, for a private road, 23 feet for a railroad, and for a waterway or any other traverse way not previously mentioned, an amount equal to the height of the highest mobile object that would normally traverse it, would exceed a standard of paragraph (a) or (b) of this section.

(d) Any construction or alteration on any of the following airports and heliports:

(1) A public use airport listed in the Airport/Facility Directory, Alaska Supplement, or Pacific Chart Supplement of the U.S. Government Flight Information Publications;

(2) A military airport under construction, or an airport under construction that will be available for public use;

(3) An airport operated by a Federal agency or the DOD.

(4) An airport or heliport with at least one FAA-approved instrument approach procedure.

(e) You do not need to file notice for construction or alteration of:

(1) Any object that will be shielded by existing structures of a permanent and substantial nature or by natural terrain or topographic features of equal or greater height, and will be located in the congested area of a city, town, or settlement where the shielded structure will not adversely affect safety in air navigation;

(2) Any air navigation facility, airport visual approach or landing aid, aircraft arresting device, or meteorological device meeting FAA-approved siting criteria or an appropriate military service siting criteria on military airports, the location and height of which are fixed by its functional purpose;

(3) Any construction or alteration for which notice is required by any other FAA regulation.

(4) Any antenna structure of 20 feet or less in height, except one that would increase the height of another antenna structure.

Mail Processing Center
Federal Aviation Administration
Southwest Regional Office
Obstruction Evaluation Group
10101 Hillwood Parkway
Fort Worth, TX 76177
Fax: (817) 222-5920

PACKET 10.368 July 11, 2023

Website: https://oeaaa.faa.gov

INSTRUCTIONS FOR COMPLETING FAA FORM 7460-1

PLEASE TYPE or PRINT

ITEM #1. Please include the name, address and phone number of a personal contact point as well as the company name.

ITEM #2. Please include the name, address and phone number of a personal contact point as well as the company name.

ITEM #3. New Construction would be a structure that has not yet been built.

Alteration is a change to an existing structure such as the addition of a side mounted antenna, a change to the marking and lighting, a change to power and/or frequency, or a change to the height. The nature of the alteration shall be included in ITEM #21 "Complete Description of Proposal".

Existing would be a correction to the latitude and/or longitude, a correction to the height, or if filing on an existing structure which has never been studied by the FAA. The reason for the notice shall be included in ITEM #21 "Complete Description of Proposal".

ITEM #4. If Permanent, so indicate. If Temporary, such as a crane or drilling derrick, enters the estimated length of time the temporary structure will be up.

ITEM #5. Enter the date that construction is expected to start and the date that construction should be completed.

ITEM #6. Please indicate the type of structure. DO NOT LEAVE BLANK.

ITEM #7. In the event that obstruction marking and lighting is required, please indicate type desired. If no preference, check "other" and indicate "no preference" DO NOT LEAVE BLANK. NOTE: High Intensity lighting shall be used only for structures over 500' AGL. In the absence of high intensity lighting for structures over 500' AGL, marking is also required.

ITEM #8. If this is an existing tower that has been registered with the FCC, enter the FCC Antenna Structure Registration number here.

ITEM #9 and #10. Latitude and longitude must be geographic coordinates, accurate to within the nearest second or to the nearest hundredth of a second if known. Latitude and longitude derived solely from a hand-held G P S instrument is NOT acceptable. A hand-held GPS is only accurate to within 100 meters (328 feet) 95 percent of the time. This data, when plotted, should match the site depiction submitted under ITEM #20.

ITEM #11. NAD 83 is preferred; however, latitude and longitude may be submitted in NAD 27. Also, in some geographic areas where NAD 27 and NAD 83 are not available other datum may be used. It is important to know which datum is used. DO NOT LEAVE BLANK.

ITEM #12. Enter the name of the nearest city and state to the site. If the structure is or will be in a city, enter the name of that city and state.

ITEM #13. Enter the full name of the nearest public-use (not private-use) airport or heliport or military airport or heliport to the site.

ITEM #14. Enter the distance from the airport or heliport listed in #13 to the structure.

ITEM #15. Enter the direction from the airport or heliport listed in #13 to the structure.

ITEM #16. Enter the site elevation above mean sea level and expressed in whole feet rounded to the nearest foot (e.g. 17'3" rounds to 17', 17'6" rounds to 18'). This data should match the ground contour elevations for site depiction submitted under ITEM #20.

ITEM #17. Enter the total structure height above ground level in whole feet rounded to the next highest foot (e.g. 17'3" rounds to 18'). The total structure height shall include anything mounted on top of the structure, such as antennas, obstruction lights, lightning rods, etc.

ITEM #18. Enter the overall height above mean sea level and expressed in whole feet. This will be the total of ITEM #16 + ITEM #17.

ITEM #19. If an FAA aeronautical study was previously conducted, enter the previous study number.

ITEM #20. Enter the relationship of the structure to roads, airports, prominent terrain, existing structures, etc. Attach an 8-1/2" x 11" non-reduced copy of the appropriate 7.5 minute U.S. Geological Survey (USGS) Quadrangle Map MARKED WITH A PRECISE INDICATION OF THE SITE LOCATION. To obtain maps, contact USGS at 1-888-275-8747 or via internet at "http://store.usgs.gov". If available, attach a copy of a documented site survey with the surveyor's certification stating the amount of vertical and horizontal accuracy in feet.

ITEM #21.

- For transmitting stations, include maximum effective radiated power (ERP) and all frequencies.
- For antennas, include the type of antenna and center of radiation (Attach the antenna pattern, if available).
- For microwave, include azimuth relative to true north.
- For overhead wires or transmission lines, include size and configuration of wires and their supporting structures (Attach depiction).
- For each pole/support, include coordinates, site elevation, and structure height above ground level or water.
- For buildings, include site orientation, coordinates of each corner, dimensions, and construction materials.
- For alterations, explain the alteration thoroughly.
- For existing structures, thoroughly explain the reason for notifying the FAA (e.g. corrections, no record or previous study, etc.).

Filing this information with the FAA does not relieve the sponsor of this construction or alteration from complying with any other federal, state or local rules or regulations. If you are not sure what other rules or regulations apply to your proposal, contact local/state aviation's and zoning authorities.

Paperwork Reduction Work Act Statement: A federal agency may not conduct or sponsor, and a person is not required to respond to, nor shall a person be subject to a penalty for failure to comply with a collection of information subject to the requirements of the Paperwork Reduction Act unless that collection displays a currently valid OMB Control Number. The OMB control number for this information collection is 2120-0001. Public reporting for this collection of information is estimated to be approximately 19 minutes per response, including the time for reviewing instructions, searching existing data sources, gathering and maintaining the data needed, completing and reviewing the collection of information. All responses to this collection of information are mandatory for anyone proposing construction or alteration that meets the criteria contained in 14 CFR 77. This information is collected to evaluate the effect of proposed construction or alteration on air navigation and is not confidential. Send comments regarding this burden estimate or any other aspect of this collection of information, including suggestions for reducing this burden to: Information Collection Clearance Officer, Federal Aviation Administration, 10101 Hillwood Parkway, Fort Worth, TX 76177-1524.

Privacy Act Statement (5 U.S.C. § 552a, as amended): AUTHORITY: The FAA is responsible for issuing a determination based on extensive analysis completed in accordance with 49 United States Code (USC) Sections 44718. Title 14 of the Code of Federal Regulations (14 CFR), part 77 authorizes FAA to collect this information. PURPOSE(S): FAA will use the information provided to administer the Aeronautical Study Process. ROUTINE USE(S): In accordance with DOT's system of records notice, DOT/ALL 16 Mailing Management System and DOT/FAA 826 Petitions for Exemption, Other than Medical Exemption-Public Dockets, the information provided may be disclosed to officials within the Federal government and the public in general.

Please Type or Print on This Form

Form Approved OMB No.2120-0001
Expiration Date: 04/30/2023

U.S. Department of Transportation
Federal Aviation Administration

Failure To Provide All Requested Information May Delay Processing of Your Notice

Notice of Proposed Construction or Alteration

FOR FAA USE ONLY
Aeronautical Study Number

1. Sponsor *(person, company, etc. proposing this action):*
Attn. of
Name: _____
Address: _____
_____
City: _____ State: _____ Zip: _____
Telephone: _____ Fax: _____

2. Sponsor's Representative *(if other than #1):*
Attn. of
Name: _____
Address: _____
_____
City: _____ State: _____ Zip: _____
Telephone: _____ Fax: _____

3. Notice of: ☐ New Construction ☐ Alteration ☐ Existing

4. Duration: ☐ Permanent ☐ Temporary (___ months, _____days)

5. Work Schedule: Beginning _____ End _____

6. Type: ☐ Antenna Tower ☐ Crane ☐ Building ☐ Power Line
☐ Landfill ☐ Water Tank ☐ Other _____

7. Marking/Painting and/or Lighting Preferred:
☐ Red Lights and Paint ☐ Dual - Red and Medium Intensity
☐ White-Medium Intensity ☐ Dual - Red and high Intensity
☐ White -High Intensity ☐ Other

8. FCC Antenna Structure Registration Number *(if applicable)*:
_____

9. Latitude: ____ 0 ____ ____ . ____ "

10. Longitude: ____ 0 ____ ____ . ____ "

11. Datum: ☐ NAD 83 ☐ NAD 27 ☐ Other

12. Nearest: City: _____ State _____

13. Nearest *Public-use* *(not private-use)* or Military Airport or Heliport:
_____

14. Distance from #13. to Structure: _____

15. Direction from #13. to Structure: _____

16. Site Elevation ***(AMSL)***: _____ ft.

17. Total Structure Height ***(AGL)***: _____ ft.

18. Overall Height (#16 + #17) ***(AMSL)***: _____ ft.

19. Previous FAA Aeronautical Study Number *(if applicable)*:
_____-OE

20. Description of Location: *(Attach a USGS 7.5 minute Quadrangle Map with the precise site marked and any certified survey)*

21. Complete Description of Proposal:

Frequency/Power (kW)	

Notice is required by 14 Code of Federal Regulations, part 77 pursuant to 49 U.S.C., Section 44718. Persons who knowingly and willingly violate the notice requirements of part 77 are subject to a civil penalty of $1,000 per day until the notice is received, pursuant to 49 U.S.C., Section 46301(a)

I hereby certify that all of the above statements made by me are true, complete, and correct to the best of my knowledge. In addition, I agree to mark and/or light the structure in accordance with established marking & lighting standards as necessary.

Date	Typed or Printed Name and Title of Person Filing Notice	Signature
PACKET	10,370	July 11, 2023

APPENDIX E: FAA CSPP REVIEW CHECKLIST

Project Manager to complete this checklist at final review before sealing CSPP.

Checklist for FAA CSPP Review

Airport Name: _____ LOCID: _____

Associate City: _____

Project No. _____

Project Name: _____

F.1.1. AC 150/5370-2G

This checklist identifies the main elements and sub-elements established under Chapter 2 of Advisory Circular 150/5370-2G. Project Managers (PM) are encouraged to use this checklist as an aid when reviewing a Sponsor's CSPP for conformance to the safety standards. Because the PM's approval/disapproval letter in OE/AAA represents the official FAA action, a completed checklist is not a required record the PM must sign or archive in the grant file.

CSPP Element	Element Addressed?			Remarks
	Yes	No	N/A	
Coordination (Section 2.5)				
– Contractor ProgressMeetings				
– Addresses necessary actions when changesare proposed to CSPP				
– Provisions for FAA ATOCoordination				
Phasing (Section 2.6)				
– Phase Elements				
– Construction SafetyDrawings				
Area and Operations Affected by Construction Activity (Section 2.7)				
– Identification of affectedAreas				
– Mitigation Affects				
Navigation Aid Protection (Section 2.8)				
– Operational NAVAID Criticalareas				
Contractor Access (Section 2.9)				
– Location of Stockpiles ConstructionMaterial				
– Vehicle and PedestrianOperations				
Wildlife Management (Section 2.10)				
– Trash				
– Standing Water				
– Tall Grass				
– Fencing and Gates				
– Disruption of Wildlife Habitat				
Foreign Object Debris (Section 2.11)				
– FOD Control Measures				
Hazardous Material Management (Section 2.12)				
– Hazardous Material Controls				

CSPP Element	Element Addressed?			Remarks
	Yes	No	N/A	
Notification of Construction Activities (Section 2.13)				
– List of ResponsibleRepresentatives				
– NOTAMs				
– Emergency NotificationProcedures				
– Coordination with ARFF				
– Notification to the FAA (Part 77,NAVAIDs….)				
Inspection Requirements (Section 2.14)				
– Daily Inspections				
– Final Inspections				
Underground Utilities (Section 2.15)				
– Procedures for protecting underground utilities				
Penalties (Section 2.16)				
– Penalty provisions for noncompliance with CSPP				
Special Conditions (Section 2.17)				
– Conditions that may affect airport operations				
Runway and Taxiway Visual Aids (Section 2.18)				
– General – Convey Clear Meaning; Secured from movement; Frangible				
– Markings				
– Lighting and Visual NAVAIDs				
– Signage				
Access Routes - Marking and Signage (Section 2.19)				
– Haul Road Demarcation				
Hazard Marking, Lighting and Signage (Section 2.20)				
– Areas Impacted by ConstructionOperations				
– Equipment				
Work Zone Lighting for Nighttime Construction (Section 2.21)				
– Proper Illumination of Construction Area/Equipment				
Protection Runway and Taxiway Areas, Zones and Surfaces (Section 2.22)				
– Runway Safety Area (RSA)				
– Runway Object Free Area (ROFA)				
– Taxiway Safety Area (TSA)				
– Taxiway Object Free Area (TOFA)				
– Obstacle Free Zone (OFZ)				
– Approach and DepartureSurfaces				
Other Limitations on Construction (Section 2.23)				
– Prohibitions				
– Restrictions				

City Council Meeting

Item Number: 11

Meeting Date: July 11, 2023

To: City Council / City Manager

From: Adrian Acosta, Manager, Engineering (Development)

Subject: **Motion approving a request by Newton Engineering, to defer paving improvements for Midkiff Industrial Center, Section 28, and to waive the corresponding financial security guarantee valued at $84,496.00, an amount equal to the estimated cost to construct the public infrastructure. The subject property is generally located east of South Midkiff Road and south of West Industrial Avenue. The property is within the corporate limits of the City of Midland (DISTRICT 2) (ENGINEERING SERVICES)**

Purpose:

Motion approving a request by Newton Engineering, to defer paving improvements for Midkiff Industrial Center, Section 28, and to waive the corresponding financial security guarantee valued at $84,496.00, an amount equal to the estimated cost to construct the public infrastructure. The subject property is generally located east of S. Midkiff Road and south of W. Industrial Avenue. The property is within the corporate limits of the City of Midland.

Recommended City Council Action:

Approve

Fiscal Impact:

Water Distribution $ 0.00
Wastewater Collection $ 0.00
Paving $ 84,496.00
Sidewalk $ 0.00
Drainage $ 0.00

Total Value of Deferral $ 84,496.00

Discussion:

Midkiff Industrial Center, Section 28 is proposed as a 7.23-acre subdivision. The two-tract subdivision is generally located east of S. Midkiff Road and south of W. Industrial Avenue. The address for the property is 2 W Industrial Loop, inside the corporate limits of the City of Midland.

Newton Engineering, on behalf of the developer, Industrial Oils Inc, has requested to defer paving improvements, and waive the corresponding financial security guarantee, which is equal to 100% of the developer's portion of the construction costs.

Paving:
W. Industrial Loop is not currently constructed to City of Midland standards along the frontage of the proposed development. Newton Engineering is requesting to defer paving improvements along this stretch of W. Industrial Loop. It is the opinion of Engineering staff to accept the deferral request for paving improvements due to W. Industrial Loop being outside of City Limits. The developer will also be dedicating an additional 20 feet to Midkiff's R.O.W. Based on these circumstances, it is the recommendation of Engineering staff to accept the deferral request for paving improvements.

Should Council agree to the deferral for one or all improvements construction, staff will nevertheless require that the following note by added to the Final Plat.

The installation of public improvements may be required by the City of Midland at such time as: (1) the 7.23-acre tract is re-platted for subdivision into more than three lots, or (2) the property is rezoned for a more intensive use.

Attached are the deferral request, Opinion of Probable Cost and Preliminary Plat prepared by HPF Consultants. A location map is also included.

Morris Williams Jr.

City Manager's Office

NEWTON ENGINEERING, PC
4501A Santa Rosa Dr.
Midland, Texas 79707
(432) 770-0499
F-13856
F-10194809
2481 E. 2nd St.
Odessa, Texas 79761
(432) 935-0707

June 12, 2023

Jose Ortiz
City of Midland Texas
300 N. Loraine
Midland, Texas 79702

RE: Midkiff Industrial Center, Section 28- Request for a Deferral of Public Improvement Installation

Mr. Ortiz:

On behalf of our client, Industrial Oils Inc., we respectfully request deferral of public improvements for Midkiff Industrial Center, Section 28, and waiver of the corresponding financial security guarantee valued at $84,496.00, an amount equal to the estimated cost of construction. The subject property is a 7.23-acre tract on the east side of S Midkiff Road approximately 0.25 miles south of W Industrial Avenue. The property is currently in the process of being replatted.

Fiscal Impact:

Paving Improvements	$84,496.00
Total Value of Deferral	$84,496.00
Cash deposit or other acceptable security (requested)	*$0.00*

The area surrounding the proposed development consists of industrial use. S Midkiff Road to the west is currently paved to City Standards. W Industrial Loop the east is currently strip paved to a width of approximately 21' with no curb and gutter. The pavement surface is in fair condition. Public paving and sidewalk improvements will be deferred.

1. Water Distribution: 12" water exists in Midkiff Road and 6" water exists in W Industrial Loop, therefore no public improvements are required.
2. Wastewater Collection: 15" Sewer exists in Midkiff Road and 6" sewer exists in the alley to the north, therefore no public improvements are required.
3. Paving: We are requesting to defer public paving of W Industrial Loop to City Standards, and waiver of the corresponding financial security guarantee, equal to

NEWTON ENGINEERING, PC
4501A Santa Rosa Dr.
Midland, Texas 79707
(432) 770-0499
F-13856
F-10194809
2481 E. 2nd St.
Odessa, Texas 79761
(432) 935-0707

the construction costs estimated to be $84,496.00. The subject property has access to S Midkiff Road, which is paved to City Standards. The W Industrial Loop ROW is not in a state that is ready for construction of a roadway built to City Standards. Adjacent to the subject property, the ROW is only approximately 45’ wide. Dedication of additional ROW by the owner, Industrial Oils Inc. is not practical due to an existing building at the southeast corner of the tract that would encroach on City ROW if dedicated. Additionally, the construction of curb and gutter could potentially disturb the existing drainage pattern in the ROW, and would necessitate more extensive redesign of W Industrial Loop to the north and to the south to prevent ponding. The deferral request includes repaving W Industrial Loop to a 41’ local section with curb and gutter on both sides along the platted frontage.

4. Drainage: No drainage study is required at this time due to the existing site being developed.

If you have any questions or need additional information please let me know.

Sincerely,



John Newton, P.E.

Summary of Public Improvements - Opinion of Probable Cost

Location:	Midkiff Industrial Center, Section 28
Engineer:	John M. Newton

Summary	Total
Wastewater Collection Improvements	$0.00
Water Distribution Improvements	$0.00
Paving Improvements	$84,496.00
Sidewalk Improvements	$0.00
Construction Total	**$84,496.00**

Paving - Opinion of Probable Cost

Location: Midkiff Industrial Center, Section 28
Engineer: John M. Newton

Paving Improvements	Quantity	Unit	Unit Price	Total
Paving Width (back-to-back)	41	FT		
Length of Paving	340	FT		
Base Rock Depth - Bott Lift (6" min - 8" max)	8	in		
Base Rock Depth - Top Lift (5", 6" or 8" max)	0	in		
Base Rock Unit Weight (95% Standard Proctor)	133	PCF		
Base Rock waste	5	%		
HMAC thickness (in)	2	in		
HMAC waste	5	%		

Paving Improvements	Quantity	Unit	Unit Price	Total
ROW Preparation	339.51	LF	10.00	3,395.10
24" Curb & Gutter	679	LF	15.00	10,185.30
Excavation	360.47	CY	5.00	1,802.34
Scarify / Shape / Compact Sub-grade	1622.10	SY	3.50	5,677.36
Base Rock - Bott Lift (Material Only)	679.58	TN	9.50	6,456.01
Base Rock - Top Lift (Material Only)	0.00	TN	9.50	0.00
Shape / Compact Base Rock - Bottom Lift	1622.10	SY	3.50	5,677.36
Shape / Compact Base Rock - Top Lift	1395.76	SY	3.50	4,885.17
Tack Coat	1395.76	SY	1.00	1,395.76
HMAC (Material Only)	161.21	TN	80.00	12,896.85
Installation of HMAC Surface Course	1395.76	SY	4.00	5,583.05
Erosion Protection ($/100 LF)	3.3951	LS	1000.00	3,395.10
Construction Staking ($/100LF)	3.3951	LS	500.00	1,697.55
Traffic Control / Job Site Safety ($/100LF)	3.3951	LS	250.00	848.78
Contingency (nearest $100)	15	%	15%	9,600.00
Construction Total				**$73,495.74**

Paving - Opinion of Probable Cost

Location: Midkiff Industrial Center, Section 28
Engineer: John M. Newton

Paving Improvements	Quantity	Unit	Unit Price	Total
Construction Total (from prev page)				**$73,495.74**
ROW Acquisition	0	LS	1	0.00
Engineering & Surveying	10	LS	10%	7,000.00
Construction Administration	5	LS	5%	4,000.00
Engineering & Administration Total				**$11,000.00**
TOTAL				**$84,496.00**
Developers Share	100%			**$84,496.00**
$Cost / LF	339.51	LF		**248.8763218**

Paving - Opinion of Probable Cost

Location: Midkiff Industrial Center, Section 28
Engineer: John M. Newton

Paving Improvements	Quantity	Unit	Unit Price	Total

MIDKIFF INDUSTRIAL CENTER, SECTION 28

PRELIMINARY PLAT

BEING A REPLAT OF LOT 1, BLOCK 3, MIDKIFF INDUSTRIAL CENTER, SECTION 2, AND A 4.04 ACRE TRACT LOCATED IN SECTION 4, BLOCK 39, T-2-S, T. & P. R.R. CO. SURVEY, CITY AND COUNTY OF MIDLAND, TEXAS



Not To Scale

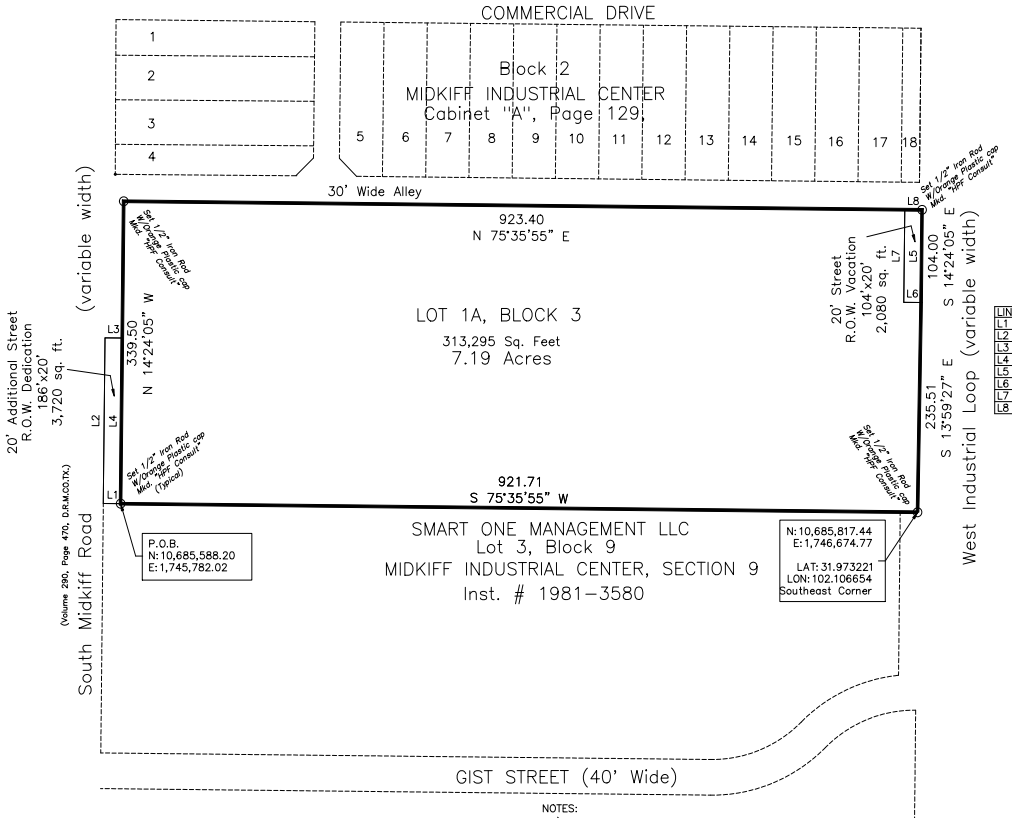

LINE	BEARING	DISTANCE
L1	S 75°35'55" W	20.00
L2	N 14°24'05" W	186.00
L3	N 75°35'55" E	20.00
L4	S 14°24'05" E	186.00
L5	S 14°24'05" E	104.00
L6	S 75°35'55" W	20.00
L7	N 14°24'05" W	104.00
L8	N 75°35'55" E	20.00

NOTES:
ACCORDING TO THE FLOOD INSURANCE RATE MAP FOR MIDLAND COUNTY, TEXAS, UNINCORPORATED AREA, COMMUNITY MAP NUMBER 48329C0201 F, DATED SEPTEMBER 16, 2005. THIS PROPERTY IS SITUATED WITHIN ZONE "X" WHICH IS DEFINED AS AREAS DETERMINED TO BE OUTSIDE THE 0.2% ANNUAL CHANCE OF FLOOD PLAIN.

IMPACT FEES:
INITIAL IMPACT FEES WILL BE ASSESSED DURING THE FINAL PLATTING PROCESS. IMPLEMENTATION AND COLLECTION OF IMPACT FEES WILL TAKE PLACE DURING THE PERMITTING PROCESS. ADDITIONAL IMPACT FEES OR INCREASES IN FEES MAY NOT BE ASSESSED AGAINST THE TRACT UNLESS THE NUMBER OF SERVICE UNITS TO BE DEVELOPED ON THE TRACT INCREASES.

NOTES:
1) SELLING A PORTION OF THIS ADDITION BY METES AND BOUNDS MAY BE A VIOLATION OF CITY ORDINANCE AND STATE LAW AND SUBJECT TO FINES AND WITHHOLDING OF UTILITIES AND BUILDING PERMITS.

2) ALL BEARINGS, DISTANCE, COORDINATES AND AREAS SHOWN HEREON ARE BASED UPON THE TEXAS STATE PLANE COORDINATE SYSTEM, NAD83 TXCZ. ALL ELEVATIONS ARE BASED UPON NAVD88.

3) THE INSTALLTION OF PUBLIC IMPROVEMENTS MAY BE REQUIRED BY THE CITY OF MIDLAND AS SUCH TIME AS (1) EITHER TRACT IS RE-PLATTED OR (2) THE PROPERTY IS REZONED FOR A MORE INTENSIVE USE.

4) Approval of a site plan by the City of Midland may be required before thoses lot(s) may be developed and before a building permit may be obtained.

OWNERS CERTIFICATE:

THE STATE OF TEXAS
COUNTY OF MIDLAND

WHEREAS INDUSTRIAL OILS INC. IS THE RECORD OWNER OF A TRACT OF LAND DESCRIBED HEREIN AS A 7.23 ACRE TRACT SITUATED IN SECTION 4, BLOCK "39", T-2-S, T. & P.R.R. CO. SURVEY, MIDLAND COUNTY, TEXAS.

NOW, THEREFORE, KNOW ALL MEN BY THESE PRESENTS:

THAT INDUSTRIAL OILS INC., BEING THE OWNER OF THE AFOREMENTIONED LAND SHOWN ON THIS PLAT DESIGNATED AS MIDKIFF INDUSTRIAL CENTER, SECTION 28, MIDLAND COUNTY, TEXAS AND WHOSE NAME IS SUBSCRIBED HERETO, DO HEREBY DEDICATE TO THE PUBLIC USE FOREVER THE STREETS, AND EASEMENTS, SHOWN HEREON.

WITNESS MY HAND AT MIDLAND, TEXAS, THIS

THE_____DAY OF_____2023.

BY:_____.

ACKNOWLEDGEMENT:

THE STATE OF TEXAS
COUNTY OF MIDLAND

BEFORE ME THE UNDERSIGNED AUTHORITY, A NOTARY PUBLIC IN AND FOR THE STATE OF TEXAS, ON THIS DAY PERSONALLY APPEARED, STAN WILLIAMSON, KNOWN TO ME TO BE THE PERSON WHOSE NAME IS SUBSCRIBED TO THE FOREGOING INSTRUMENT, AND ACKNOWLEDGED TO ME THAT HE WAS ACTING AS THE OWNER, AND THAT HE EXECUTED THE SAME FOR THE PURPOSES AND CONSIDERATION THEREIN EXPRESSED, AND IN THE CAPACITY THEREIN STATED. GIVEN UNDER MY HAND AND SEAL OF OFFICE THIS

THE_____DAY OF_____,2023.

_____
NOTARY PUBLIC IN AND FOR THE STATE OF TEXAS.

CERTIFICATE OF APPROVAL
FOR APPROVAL BY THE COMMISSION:

THIS IS TO CERTIFY THAT THE ABOVE FOREGOING PLAT OF "MIDKIFF INDUSTRIAL CENTER, SECTION 28" WAS APPROVED BY PROPER ACTION OF THE CITY PLANNING AND ZONING COMMISSION OF THE CITY OF MIDLAND , TEXAS ON THIS

THE_____DAY OF_____,2023.

_____
NOTARY PUBLIC IN AND FOR THE STATE OF TEXAS.

SIGNED:
_____
CHAIRMAN LUCY SISNIEGA

ATTEST:
_____
SECRETARY ELIZABETH SHAUGHNESSY

UTILITY COMPANY'S CERTIFICATE
THIS PLAT HAS BEEN CHECKED FOR ACCESSIBILITY OF UTILITIES

ATMOS ENERGY
BY:_____

AT&T
BY:_____

OPTIMUM
BY:_____

GRANDE COMMUNICATIONS
BY:_____

ONCOR ELECTRIC DELIVERY
BY:_____

SURVEYORS CERTIFICATE:

KNOW ALL MEN BY THESE PRESENTS:

THAT I, MARCUS L. HOSTAS, A REGISTERED [illegible] SURVEYOR OF THE STATE OF TEXAS, DO HEREBY CERTIFY [illegible] AS PREPARED FROM AN ACTUAL AND ACCURATE SURVEY [illegible] THE CORNER MONUMENTS SHOWN THEREON WERE PROPERLY PLACED UNDER MY PERSONAL SUPERVISION, IN ACCORDANCE WITH THE SUBDIVISION ORDINANCE OF THE CITY OF MIDLAND, TEXAS.

MARCUS L. HOSTAS
REGISTERED PROFESSIONAL LAND SURVEYOR
NO. 6043

"PRELIMINARY, THIS DOCUMENT SHALL NOT BE RECORDED FOR ANY PURPOSE AND SHALL NOT BE USED OR VIEWED OR RELIED UPON AS THE FINAL SURVEY DOCUMENT."

PACKET

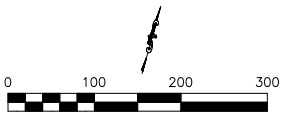

OWNER:
Stan Williamson
Industrial Oils INC.
#2 West Industrial Loop
Midland, Texas 79701
432-631-1680

PLAT FILED FOR RECORD
MIDLAND COUNTY, TEXAS

NO._____CABINET_____.

DATE_____PAGE_____.

ENGINEERING AND DESIGN
TEXAS REGISTERED
TBPELS FIRM 10194683
3106 N. Big Spring Street
Midland, Texas
432.235.8111
MARCUS.HOSTAS@HPFconsultants.com

July 11, 2023

MIDKIFF INDUSTRIAL CENTER, SECTION 28

J:\Cody Stroud\Preliminary Plat-20230419\Preliminary Plat Rev 20230419.dwg

Summary of Public Improvements - Opinion of Probable Cost

Location:	Midkiff Industrial Center, Section 28
Engineer:	John M. Newton

Summary	Total
Wastewater Collection Improvements	$0.00
Water Distribution Improvements	$0.00
Paving Improvements	$84,496.00
Sidewalk Improvements	$0.00
Construction Total	**$84,496.00**

Paving - Opinion of Probable Cost

Location: Midkiff Industrial Center, Section 28
Engineer: John M. Newton

Paving Improvements	Quantity	Unit	Unit Price	Total
Paving Width (back-to-back)	41	FT		
Length of Paving	340	FT		
Base Rock Depth - Bott Lift (6" min - 8" max)	8	in		
Base Rock Depth - Top Lift (5", 6" or 8" max)	0	in		
Base Rock Unit Weight (95% Standard Proctor)	133	PCF		
Base Rock waste	5	%		
HMAC thickness (in)	2	in		
HMAC waste	5	%		

Paving Improvements	Quantity	Unit	Unit Price	Total
ROW Preparation	339.51	LF	10.00	3,395.10
24" Curb & Gutter	679	LF	15.00	10,185.30
Excavation	360.47	CY	5.00	1,802.34
Scarify / Shape / Compact Sub-grade	1622.10	SY	3.50	5,677.36
Base Rock - Bott Lift (Material Only)	679.58	TN	9.50	6,456.01
Base Rock - Top Lift (Material Only)	0.00	TN	9.50	0.00
Shape / Compact Base Rock - Bottom Lift	1622.10	SY	3.50	5,677.36
Shape / Compact Base Rock - Top Lift	1395.76	SY	3.50	4,885.17
Tack Coat	1395.76	SY	1.00	1,395.76
HMAC (Material Only)	161.21	TN	80.00	12,896.85
Installation of HMAC Surface Course	1395.76	SY	4.00	5,583.05
Erosion Protection ($/100 LF)	3.3951	LS	1000.00	3,395.10
Construction Staking ($/100LF)	3.3951	LS	500.00	1,697.55
Traffic Control / Job Site Safety ($/100LF)	3.3951	LS	250.00	848.78
Contingency (nearest $100)	15	%	15%	9,600.00
Construction Total				**$73,495.74**

Paving - Opinion of Probable Cost

Location: Midkiff Industrial Center, Section 28
Engineer: John M. Newton

Paving Improvements	Quantity	Unit	Unit Price	Total
Construction Total (from prev page)				**$73,495.74**
ROW Acquisition	0	LS	1	0.00
Engineering & Surveying	10	LS	10%	7,000.00
Construction Administration	5	LS	5%	4,000.00
Engineering & Administration Total				**$11,000.00**
TOTAL				**$84,496.00**
Developers Share	100%			**$84,496.00**
$Cost / LF	339.51	LF		**248.8763218**

Paving - Opinion of Probable Cost

Location: Midkiff Industrial Center, Section 28
Engineer: John M. Newton

Paving Improvements	Quantity	Unit	Unit Price	Total

MIDKIFF INDUSTRIAL CENTER, SECTION 28

PRELIMINARY PLAT

BEING A REPLAT OF LOT 1, BLOCK 3, MIDKIFF INDUSTRIAL CENTER, SECTION 2, AND A 4.04 ACRE TRACT LOCATED IN SECTION 4, BLOCK 39, T-2-S, T. & P. R.R. CO. SURVEY, CITY AND COUNTY OF MIDLAND, TEXAS

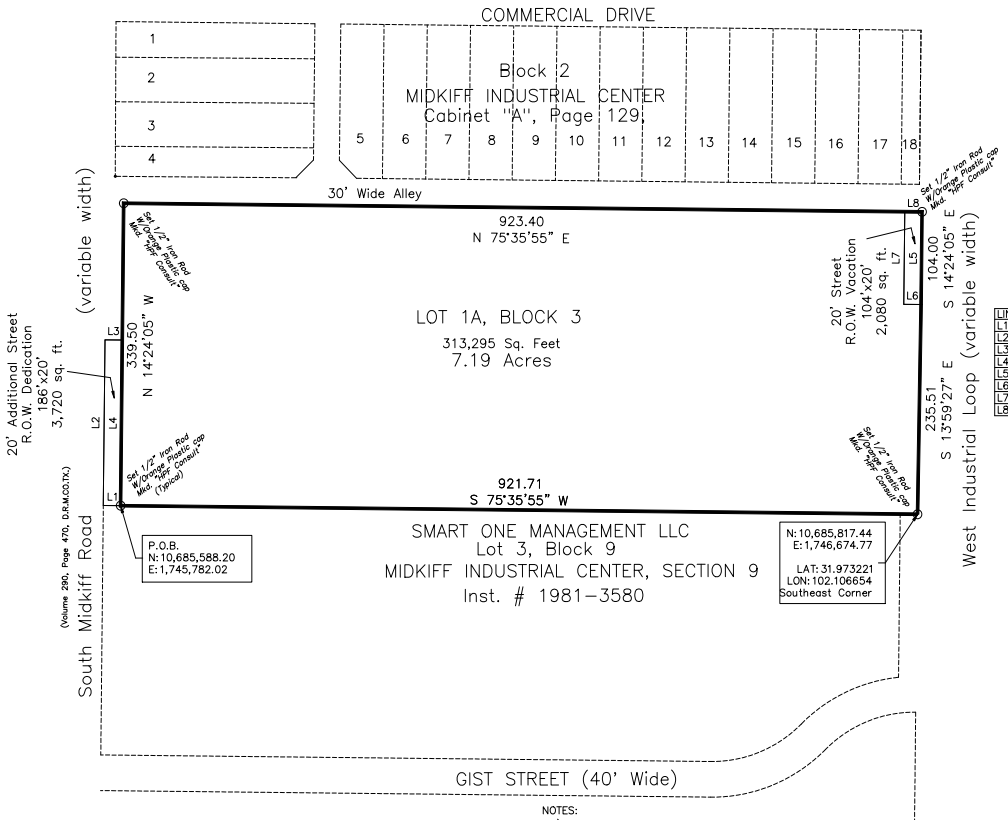

LINE	BEARING	DISTANCE
L1	S 75°35'55" W	20.00
L2	N 14°24'05" W	186.00
L3	N 75°35'55" E	20.00
L4	S 14°24'05" E	186.00
L5	S 14°24'05" E	104.00
L6	S 75°35'55" W	20.00
L7	N 14°24'05" W	104.00
L8	N 75°35'55" E	20.00



Not To Scale

OWNERS CERTIFICATE:

THE STATE OF TEXAS
COUNTY OF MIDLAND

WHEREAS INDUSTRIAL OILS INC. IS THE RECORD OWNER OF A TRACT OF LAND DESCRIBED HEREIN AS A 7.23 ACRE TRACT SITUATED IN SECTION 4, BLOCK "39", T-2-S, T. & P.R.R. CO. SURVEY, MIDLAND COUNTY, TEXAS.

NOW, THEREFORE, KNOW ALL MEN BY THESE PRESENTS:

THAT INDUSTRIAL OILS INC., BEING THE OWNER OF THE AFOREMENTIONED LAND SHOWN ON THIS PLAT DESIGNATED AS MIDKIFF INDUSTRIAL CENTER, SECTION 28, MIDLAND COUNTY, TEXAS AND WHOSE NAME IS SUBSCRIBED HERETO, DO HEREBY DEDICATE TO THE PUBLIC USE FOREVER THE STREETS, AND EASEMENTS, SHOWN HEREON.

WITNESS MY HAND AT MIDLAND, TEXAS, THIS

THE_____DAY OF_____2023.

BY:_____.

ACKNOWLEDGEMENT:

THE STATE OF TEXAS
COUNTY OF MIDLAND

BEFORE ME THE UNDERSIGNED AUTHORITY, A NOTARY PUBLIC IN AND FOR THE STATE OF TEXAS, ON THIS DAY PERSONALLY APPEARED, STAN WILLIAMSON, KNOWN TO ME TO BE THE PERSON WHOSE NAME IS SUBSCRIBED TO THE FOREGOING INSTRUMENT, AND ACKNOWLEDGED TO ME THAT HE WAS ACTING AS THE OWNER, AND THAT HE EXECUTED THE SAME FOR THE PURPOSES AND CONSIDERATION THEREIN EXPRESSED, AND IN THE CAPACITY THEREIN STATED. GIVEN UNDER MY HAND AND SEAL OF OFFICE THIS

THE_____DAY OF_____,2023.

_____
NOTARY PUBLIC IN AND FOR THE STATE OF TEXAS.

CERTIFICATE OF APPROVAL
FOR APPROVAL BY THE COMMISSION:

THIS IS TO CERTIFY THAT THE ABOVE FOREGOING PLAT OF "MIDKIFF INDUSTRIAL CENTER, SECTION 28" WAS APPROVED BY PROPER ACTION OF THE CITY PLANNING AND ZONING COMMISSION OF THE CITY OF MIDLAND , TEXAS ON THIS

THE_____DAY OF_____,2023.

_____
NOTARY PUBLIC IN AND FOR THE STATE OF TEXAS.

SIGNED:
_____
CHAIRMAN LUCY SISNIEGA

ATTEST:
_____
SECRETARY ELIZABETH SHAUGHNESSY

NOTES:
ACCORDING TO THE FLOOD INSURANCE RATE MAP FOR MIDLAND COUNTY, TEXAS, UNINCORPORATED AREA, COMMUNITY MAP NUMBER 48329C0201 F, DATED SEPTEMBER 16, 2005. THIS PROPERTY IS SITUATED WITHIN ZONE "X" WHICH IS DEFINED AS AREAS DETERMINED TO BE OUTSIDE THE 0.2% ANNUAL CHANCE OF FLOOD PLAIN.

IMPACT FEES:
INITIAL IMPACT FEES WILL BE ASSESSED DURING THE FINAL PLATTING PROCESS. IMPLEMENTATION AND COLLECTION OF IMPACT FEES WILL TAKE PLACE DURING THE PERMITTING PROCESS. ADDITIONAL IMPACT FEES OR INCREASES IN FEES MAY NOT BE ASSESSED AGAINST THE TRACT UNLESS THE NUMBER OF SERVICE UNITS TO BE DEVELOPED ON THE TRACT INCREASES.

NOTES:
1) SELLING A PORTION OF THIS ADDITION BY METES AND BOUNDS MAY BE A VIOLATION OF CITY ORDINANCE AND STATE LAW AND SUBJECT TO FINES AND WITHHOLDING OF UTILITIES AND BUILDING PERMITS.

2) ALL BEARINGS, DISTANCE, COORDINATES AND AREAS SHOWN HEREON ARE BASED UPON THE TEXAS STATE PLANE COORDINATE SYSTEM, NAD83 TXCZ. ALL ELEVATIONS ARE BASED UPON NAVD88.

3) THE INSTALLTION OF PUBLIC IMPROVEMENTS MAY BE REQUIRED BY THE CITY OF MIDLAND AS SUCH TIME AS (1) EITHER TRACT IS RE-PLATTED OR (2) THE PROPERTY IS REZONED FOR A MORE INTENSIVE USE.

4) Approval of a site plan by the City of Midland may be required before thoses lot(s) may be developed and before a building permit may be obtained.

UTILITY COMPANY'S CERTIFICATE
THIS PLAT HAS BEEN CHECKED FOR ACCESSIBILITY OF UTILITIES

ATMOS ENERGY
BY:_____

AT&T
BY:_____

OPTIMUM
BY:_____

GRANDE COMMUNICATIONS
BY:_____

ONCOR ELECTRIC DELIVERY
BY:_____

SURVEYORS CERTIFICATE:

KNOW ALL MEN BY THESE PRESENTS:

THAT I, MARCUS L. HOSTAS, A REGISTERED ... IL LAND SURVEYOR OF THE STATE OF TEXAS, DO HEREBY CERTI... AS PREPARED FROM AN ACTUAL AND ACCURATE SURVE... THE CORNER MONUMENTS SHOWN THEREON WAS PR... ...RSONAL SUPERVISION, IN ACCORDANCE WITH ... OF THE CITY OF MIDLAND, TEXAS.

MAR...
...0343

"PRELIMINARY, THIS DOCUMENT SHALL NOT BE RECORDED FOR ANY PURPOSE AND SHALL NOT BE USED OR VIEWED OR RELIED UPON AS THE FINAL SURVEY DOCUMENT."

PACKET

11.14

0 100 200 300

OWNER:
Stan Williamson
Industrial Oils INC.
#2 West Industrial Loop
Midland, Texas 79701
432-631-1680

PLAT FILED FOR RECORD
MIDLAND COUNTY, TEXAS

NO._____CABINET_____.

DATE_____PAGE_____.

July 11, 2023

HPF CONSULTANTS, INC.
ENGINEERING AND DESIGN
TEXAS REGISTERED
TBPELS FIRM 10194683
3106 N. Big Spring Street
Midland, Texas
432.235.8111
MARCUS.HOSTAS@HPFconsultants.com

MIDKIFF INDUSTRIAL CENTER, SECTION 28

J:\Cody Stroud\Preliminary Plat-20230419\Preliminary Plat Rev 20230419.dwg

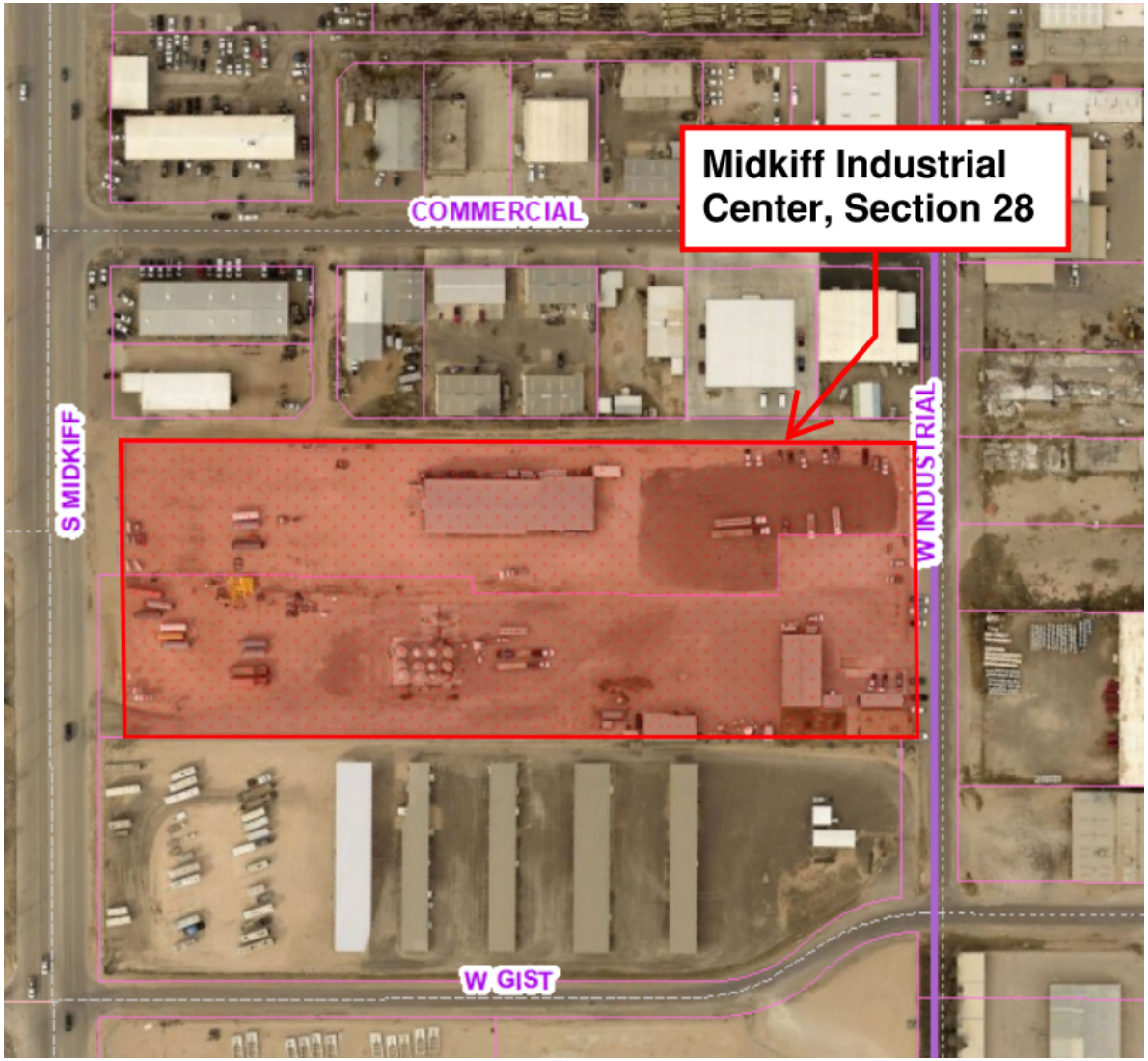

ENGINEERING DIVISION

REQUEST TO

DEFER

Paving & Sidewalks

NORTH

Midkiff Industrial Center, Section 28

(Newton Engineering)

MIDLAND Engineering Services

Made by NL 6/5/2023

City Council Meeting

Item Number: 12

Meeting Date: July 11, 2023

To: City Council / City Manager

From: John Simmons, Manager, Right-of-Way

Subject: Motion authorizing the execution of a Right-of-Way License (23-329-008) with Enterprise Navitas Midstream Midland Basin, LLC regarding City-owned property described as Section 30, Block 36, Township 3 South, T&P RR Co. Survey, Midland County, Texas (DISTRICT: NONE) (UTILITIES)

Purpose:

This motion will provide the applicant a 3,500 square foot surface area for above-ground valve connection and a 30’ wide right of way to place a Twenty-Four inch (24) privately owned, poly construction, natural gas pipeline on the City of Midland owned Sprayberry Farm real property. The applicant will need additional temporary workspaces for construction as shown on the plats.

This Right-of-Way License is proposed for a single ten (10) year period, paid in advance. Terms are consistent with the City’s standard license for facilities of this nature

Recommended City Council Action:

Approve

Fiscal Impact:

10-Years Paid In advance:

24” pipeline (61.31 rods x $750/rod): $45,982.50

Surface use area (3,500 sq. ft. x $0.24 per sq. ft.): $840.00

Surface Damages: included in the new annual rate

Total Collected: $47,822.50

Discussion:

This Right of Way is in the South Half of Section 30 in the Sprayberry Farm area and is over 2 miles from COM infrastructure. The proposed pipeline is a private, poly-construction gas line and will be Twenty-Four Inches (24”) in diameter and will be buried a minimum of thirty-six inches (36”) deep.

Certificates of Insurance are on file

City Secretary is to record all documents.

Morris Williams Jr.

City Manager’s Office

HOLD TO LIGHT TO VIEW TRUE WATERMARK IN PAPER HEAT SENSITIVE RED LOCK DISAPPEARS WHEN HEATED

3536

Whistler Pipeline, LLC
100 Congress Ave, Suite 2200
Austin, TX 78701

88-9353/1131

DATE 4.26.2023

PAY TO THE ORDER OF City of Midland $ 447.60

Four Hundred Forty-Seven Dollars 60/100 DOLLARS

citibank
CITIBANK, N.A.

FOR MCL-TX-MID.0090.00005-EE

Robert Webb

Details on back

Security Features

⑈003536⑈ ⑆113193532⑆ 9793631282⑈

CERTIFICATE OF LIABILITY INSURANCE

DATE(MM/DD/YYYY)
04/14/2023

THIS CERTIFICATE IS ISSUED AS A MATTER OF INFORMATION ONLY AND CONFERS NO RIGHTS UPON THE CERTIFICATE HOLDER. THIS CERTIFICATE DOES NOT AFFIRMATIVELY OR NEGATIVELY AMEND, EXTEND OR ALTER THE COVERAGE AFFORDED BY THE POLICIES BELOW. THIS CERTIFICATE OF INSURANCE DOES NOT CONSTITUTE A CONTRACT BETWEEN THE ISSUING INSURER(S), AUTHORIZED REPRESENTATIVE OR PRODUCER, AND THE CERTIFICATE HOLDER.

IMPORTANT: If the certificate holder is an ADDITIONAL INSURED, the policy(ies) must have ADDITIONAL INSURED provisions or be endorsed. If SUBROGATION IS WAIVED, subject to the terms and conditions of the policy, certain policies may require an endorsement. A statement on this certificate does not confer rights to the certificate holder in lieu of such endorsement(s).

PRODUCER
Aon Risk Services Southwest, Inc.
Houston TX Office
1300 Post Oak Blvd., Suite 1400
Houston TX 77056 USA

CONTACT NAME:
PHONE (A/C. No. Ext): (866) 283-7122 **FAX (A/C. No.):** 800-363-0105
E-MAIL ADDRESS:

INSURER(S) AFFORDING COVERAGE		NAIC #
INSURER A:	Old Republic Insurance Company	24147
INSURER B:	Lexington Insurance Company	19437
INSURER C:		
INSURER D:		
INSURER E:		
INSURER F:		

INSURED
Enterprise Navitas Midstream
Midland Basin LLC
1100 Louisiana Street
10th Floor
Houston TX 77002 USA

COVERAGES **CERTIFICATE NUMBER:** 570099019751 **REVISION NUMBER:**

THIS IS TO CERTIFY THAT THE POLICIES OF INSURANCE LISTED BELOW HAVE BEEN ISSUED TO THE INSURED NAMED ABOVE FOR THE POLICY PERIOD INDICATED. NOTWITHSTANDING ANY REQUIREMENT, TERM OR CONDITION OF ANY CONTRACT OR OTHER DOCUMENT WITH RESPECT TO WHICH THIS CERTIFICATE MAY BE ISSUED OR MAY PERTAIN, THE INSURANCE AFFORDED BY THE POLICIES DESCRIBED HEREIN IS SUBJECT TO ALL THE TERMS, EXCLUSIONS AND CONDITIONS OF SUCH POLICIES. LIMITS SHOWN MAY HAVE BEEN REDUCED BY PAID CLAIMS.

Limits shown are as requested

INSR LTR	TYPE OF INSURANCE	ADDL INSD	SUBR WVD	POLICY NUMBER	POLICY EFF (MM/DD/YYYY)	POLICY EXP (MM/DD/YYYY)	LIMITS	
A	X **COMMERCIAL GENERAL LIABILITY** CLAIMS-MADE X OCCUR *Each Occurrence GEN'L AGGREGATE LIMIT APPLIES PER: X POLICY PRO-JECT LOC OTHER:			MWZY31308823	04/18/2023	04/18/2024	EACH OCCURRENCE DAMAGE TO RENTED PREMISES (Ea occurrence) MED EXP (Any one person) PERSONAL & ADV INJURY GENERAL AGGREGATE PRODUCTS - COMP/OP AGG	$1,000,000 $1,000,000 Excluded $1,000,000 $6,000,000 $2,000,000
A	**AUTOMOBILE LIABILITY** X ANY AUTO OWNED AUTOS ONLY HIRED AUTOS ONLY SCHEDULED AUTOS NON-OWNED AUTOS ONLY			MWTB 313086 23	04/18/2023	04/18/2024	COMBINED SINGLE LIMIT (Ea accident) BODILY INJURY (Per person) BODILY INJURY (Per accident) PROPERTY DAMAGE (Per accident)	$1,000,000
A	X **UMBRELLA LIAB** OCCUR **EXCESS LIAB** X CLAIMS-MADE DED RETENTION			MWZU31362823	04/18/2023	04/18/2024	EACH OCCURRENCE AGGREGATE	$9,000,000 $9,000,000
A	**WORKERS COMPENSATION AND EMPLOYERS' LIABILITY** Y / N ANY PROPRIETOR / PARTNER / EXECUTIVE OFFICER/MEMBER EXCLUDED? N **(Mandatory in NH)** If yes, describe under DESCRIPTION OF OPERATIONS below	N / A		MWC31308523	04/18/2023	04/18/2024	X PER STATUTE OTH-ER E.L. EACH ACCIDENT E.L. DISEASE-EA EMPLOYEE E.L. DISEASE-POLICY LIMIT	 $1,000,000 $1,000,000 $1,000,000

DESCRIPTION OF OPERATIONS / LOCATIONS / VEHICLES (ACORD 101, Additional Remarks Schedule, may be attached if more space is required)

Certificate Holder is included as Additional Insured excluding Workers' Compensation and Employers' Liability as required by written contract but limited to the operations of the Insured under said contract, and always subject to the policy terms, conditions and exclusions. Waiver of Subrogation is granted in favor of Certificate Holder as required by written contract but limited to the operations of the Insured under said contract, and always subject to the policy terms, conditions and exclusions.

CERTIFICATE HOLDER

City of Midland
City Hall, Room 520
300 N Loraine
Midland TX 79701 USA

CANCELLATION

SHOULD ANY OF THE ABOVE DESCRIBED POLICIES BE CANCELLED BEFORE THE EXPIRATION DATE THEREOF, NOTICE WILL BE DELIVERED IN ACCORDANCE WITH THE POLICY PROVISIONS.

AUTHORIZED REPRESENTATIVE

Aon Risk Services Southwest, Inc.

Holder Identifier :

Certificate No : 570099019751

ACORD 25 (2016/03) **The ACORD name and logo are registered marks of ACORD** **©1988-2015 ACORD CORPORATION. All rights reserved.**

AGENCY CUSTOMER ID: 10638949
LOC #:

ADDITIONAL REMARKS SCHEDULE

AGENCY	NAMED INSURED
Aon Risk Services Southwest, Inc.	Enterprise Navitas Midstream
POLICY NUMBER: See Certificate Number: 570099019751	
CARRIER: See Certificate Number: 570099019751 / NAIC CODE	EFFECTIVE DATE:

ADDITIONAL REMARKS

THIS ADDITIONAL REMARKS FORM IS A SCHEDULE TO ACORD FORM,
FORM NUMBER: ACORD 25 **FORM TITLE:** Certificate of Liability Insurance

INSURER(S) AFFORDING COVERAGE	NAIC #
INSURER	
INSURER	
INSURER	
INSURER	

ADDITIONAL POLICIES If a policy below does not include limit information, refer to the corresponding policy on the ACORD certificate form for policy limits.

INSR LTR	TYPE OF INSURANCE	ADDL INSD	SUBR WVD	POLICY NUMBER	POLICY EFFECTIVE DATE (MM/DD/YYYY)	POLICY EXPIRATION DATE (MM/DD/YYYY)	LIMITS	
	EXCESS LIABILITY							
B				34064058 Claims Made	04/18/2023	04/18/2024	Aggregate	$10,000,000
							Each Occurrence	$10,000,000

© 2008 ACORD CORPORATION. All rights reserved.
The ACORD name and logo are registered marks of ACORD

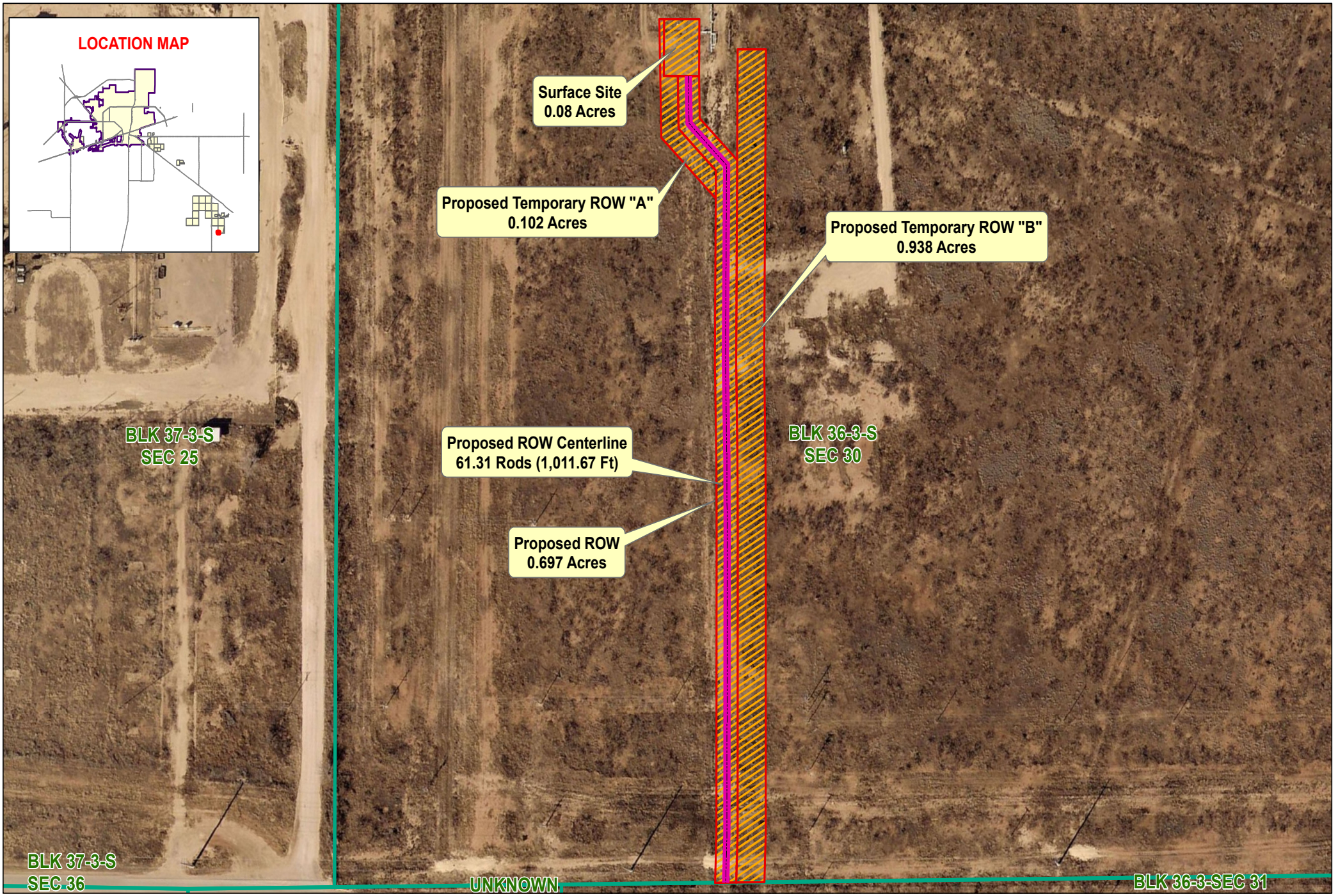

Date: 5/23/2023

Proposed ROW

Proposed Temporary ROW & Surface Site

Survey Section

PACKET

18.C

Enterprise Products
Proposed Temporary ROW, ROW and Surface Site

July 11, 2023

0 50 100 Feet

©THE CITY OF MIDLAND - 2023
THIS DATA IS NOT A SUBSTITUTION FOR A SURVEY PRODUCT, NOR IS IT DESIGNED TO BE USED AS A PRIMARY TOOL IN PERMITTING OR OTHER DECISIONS BASED SOLELY ON THE INFORMATION CONTAINED HEREIN.
THE CITY OF MIDLAND SHALL NOT BE RESPONSIBLE FOR ANY DECISIONS BASED UPON THE USE OF THIS DATA.

EXHIBIT "A"

METES AND BOUNDS DESCRIPTION

TEMPORARY RIGHT OF WAY "A"

BEING A PROPOSED 25 FOOT WIDE TEMPORARY RIGHT OF WAY SITUATED IN SECTION 30, BLOCK 36, TOWNSHIP 3 SOUTH, T. & P. RR. CO. SURVEY, ABSTRACT NO. 957, MIDLAND COUNTY, TEXAS. SAID RIGHT OF WAY BEING MORE PARTICULARLY DESCRIBED AS FOLLOWS:

BEGINNING AT A POINT (N:10642713.47, E:1845085.93) IN SAID SECTION 30, FROM WHICH A 1" IRON PIPE FOUND FOR THE NORTHWEST CORNER OF SAID SECTION 30 BEARS N 20°20'03" W, A DISTANCE OF 4277.60 FEET (TIE);

THENCE N 74°24'34" E, A DISTANCE OF 6.99 FEET TO A POINT, FROM WHICH THE CALCULATED NORTHEAST CORNER OF SAID SECTION 30 BEARS N 34°33'18" E, A DISTANCE OF 6548.05 FEET (TIE), FROM WHICH A FOUND 1/2" BENT IRON PIPE BEARS S 14°51'28" E, A DISTANCE OF 0.38 FEET (TIE);
THENCE S 14°10'21" E, A DISTANCE OF 70.00 FEET TO A POINT;
THENCE N 75°49'39" E, A DISTANCE OF 19.75 FEET TO A POINT;
THENCE S 15°35'26" E, A DISTANCE OF 64.62 FEET TO A POINT;
THENCE S 60°35'26" E, A DISTANCE OF 73.67 FEET TO A POINT;
THENCE S 14°08'34" E, A DISTANCE OF 34.49 FEET TO A POINT;
THENCE N 60°35'26" W, A DISTANCE OF 107.79 FEET TO A POINT;

THENCE N 15°35'26" W, A DISTANCE OF 145.44 FEET TO THE POINT OF BEGINNING.

SAID RIGHT OF WAY CONTAINING A TOTAL OF 4,449 SQUARE FEET OR 0.102 ACRES IN SAID SECTION 30.

SURFACE SITE

BEING A PROPOSED SURFACE SITE SITUATED IN SECTION 30, BLOCK 36, TOWNSHIP 3 SOUTH, T. & P. RR. CO. SURVEY, ABSTRACT NO. 957, MIDLAND COUNTY, TEXAS. SAID SURFACE SITE BEING MORE PARTICULARLY DESCRIBED AS FOLLOWS:

BEGINNING AT A POINT (N:10642715.35, E:1845092.66) IN SAID SECTION 30, FROM WHICH A 1" IRON PIPE FOUND FOR THE NORTHWEST CORNER OF SAID SECTION 30 BEARS N 20°25'38" W, A DISTANCE OF 4278.18 FEET (TIE);

THENCE N 75°49'39" E, A DISTANCE OF 50.00 FEET TO A POINT, FROM WHICH THE CALCULATED NORTHEAST CORNER OF SAID SECTION 30 BEARS N 34°15'53" E, A DISTANCE OF 6510.56 FEET (TIE), FROM WHICH A FOUND 1/2" BENT IRON PIPE BEARS S 14°51'28" E, A DISTANCE OF 0.38 FEET (TIE);
THENCE S 14°10'21" E, A DISTANCE OF 70.00 FEET TO A POINT;
THENCE S 75°49'39" W, A DISTANCE OF 50.00 FEET TO A POINT;

THENCE N 14°10'21" W, A DISTANCE OF 70.00 FEET TO THE POINT OF BEGINNING.

SAID SURFACE SITE CONTAINING A TOTAL OF 3,500 SQUARE FEET OR 0.080 ACRES IN SAID SECTION 30.

TEMPORARY RIGHT OF WAY "B"

BEING A PROPOSED 40 FOOT WIDE TEMPORARY RIGHT OF WAY SITUATED IN SECTION 30, BLOCK 36, TOWNSHIP 3 SOUTH, T. & P. RR. CO. SURVEY, ABSTRACT NO. 957, MIDLAND COUNTY, TEXAS. SAID RIGHT OF WAY BEING MORE PARTICULARLY DESCRIBED AS FOLLOWS:

BEGINNING AT A POINT (N:10642705.53, E:1845203.22) IN SAID SECTION 30, FROM WHICH A 1" IRON PIPE FOUND FOR THE NORTHWEST CORNER OF SAID SECTION 30 BEARS N 21°45'15" W, A DISTANCE OF 4327.13 FEET (TIE);

THENCE N 75°24'28" E, A DISTANCE OF 40.00 FEET TO A POINT, FROM WHICH THE CALCULATED NORTHEAST CORNER OF SAID SECTION 30 BEARS N 33°28'00" E, A DISTANCE OF 6464.34 FEET (TIE), FROM WHICH A FOUND 1/2" BENT IRON PIPE BEARS S 14°51'28" E, A DISTANCE OF 0.38 FEET (TIE);
THENCE S 14°08'34" E, A DISTANCE OF 383.81 FEET TO A POINT;
THENCE S 15°26'17" E, A DISTANCE OF 117.96 FEET TO A POINT;
THENCE S 14°42'37" E, A DISTANCE OF 83.41 FEET TO A POINT;
THENCE S 14°28'43" E, A DISTANCE OF 378.24 FEET TO A POINT;
THENCE S 12°39'35" E, A DISTANCE OF 58.11 FEET TO A POINT;
THENCE S 74°54'04" W, A DISTANCE OF 40.04 FEET TO A POINT;
THENCE N 12°39'35" W, A DISTANCE OF 59.18 FEET TO A POINT;
THENCE N 14°28'43" W, A DISTANCE OF 377.52 FEET TO A POINT;
THENCE N 14°42'37" W, A DISTANCE OF 83.07 FEET TO A POINT;
THENCE N 15°26'17" W, A DISTANCE OF 118.15 FEET TO A POINT;

THENCE N 14°08'34" W, A DISTANCE OF 383.94 FEET TO THE POINT OF BEGINNING.

SAID RIGHT OF WAY CONTAINING A TOTAL OF 40,868 SQUARE FEET OR 0.938 ACRES IN SAID SECTION 30.

RIGHT OF WAY

BEING A PROPOSED 30 FOOT WIDE RIGHT OF WAY SITUATED IN SECTION 30, BLOCK 36, TOWNSHIP 3 SOUTH, T. & P. RR. CO. SURVEY, ABSTRACT NO. 957, MIDLAND COUNTY, TEXAS. SAID RIGHT OF WAY BEING MORE PARTICULARLY DESCRIBED AS FOLLOWS:

BEGINNING AT A POINT (N:10642652.32, E:1845128.95) IN SAID SECTION 30, FROM WHICH THE CALCULATED SOUTHWEST CORNER OF SAID SECTION 30 BEARS S 11°49'31" W, A DISTANCE OF 1110.03 FEET (TIE), FROM WHICH A FOUND 5/8" IRON ROD BEARS N 75°11'11" E, A DISTANCE OF 55.21 FEET (TIE);

THENCE N 75°49'39" E, A DISTANCE OF 30.25 FEET TO A POINT, FROM WHICH THE CALCULATED SOUTHEAST CORNER OF SAID SECTION 30 BEARS N 86°16'44" E, A DISTANCE OF 5018.04 FEET (TIE), FROM WHICH A FOUND 4" IRON PIPE BEARS S 75°08'32" W, A DISTANCE OF 172.99 FEET (TIE);
THENCE S 15°19'32" E, A DISTANCE OF 51.44 FEET TO A POINT;
THENCE S 60°35'26" E, A DISTANCE OF 74.12 FEET TO A POINT;
THENCE S 14°08'34" E, A DISTANCE OF 248.01 FEET TO A POINT;
THENCE S 15°26'17" E, A DISTANCE OF 118.15 FEET TO A POINT;
THENCE S 14°42'37" E, A DISTANCE OF 83.07 FEET TO A POINT;
THENCE S 14°28'43" E, A DISTANCE OF 377.52 FEET TO A POINT;
THENCE S 12°39'35" E, A DISTANCE OF 59.18 FEET TO A POINT;
THENCE S 74°54'04" W, A DISTANCE OF 30.03 FEET TO A POINT;
THENCE N 12°39'35" W, A DISTANCE OF 59.98 FEET TO A POINT;
THENCE N 14°28'43" W, A DISTANCE OF 376.99 FEET TO A POINT;
THENCE N 14°42'37" W, A DISTANCE OF 82.82 FEET TO A POINT;
THENCE N 15°26'17" W, A DISTANCE OF 118.30 FEET TO A POINT;
THENCE N 14°08'34" W, A DISTANCE OF 235.47 FEET TO A POINT;
THENCE N 60°35'26" W, A DISTANCE OF 73.67 FEET TO A POINT;

THENCE N 15°35'26" W, A DISTANCE OF 64.62 FEET TO THE POINT OF BEGINNING.

SAID RIGHT OF WAY CONTAINING A TOTAL OF 30,356 SQUARE FEET OR 0.697 ACRES IN SAID SECTION 30.

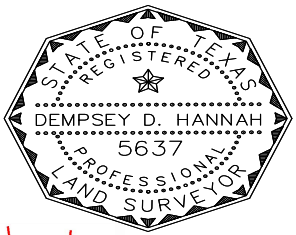

NOTES:

1. BEARINGS, DISTANCES, AREA AND COORDINATES SHOWN HEREON ARE CORRELATED TO THE TEXAS COORDINATE SYSTEM OF 1983, TEXAS CENTRAL ZONE (4203). ALL BEARINGS AND DISTANCES SHOWN ARE GRID.
2. LATITUDE & LONGITUDE ARE NAD 83 DECIMAL GEOGRAPHIC.
3. THIS SURVEY WAS PERFORMED WITHOUT THE BENEFIT OF A TITLE REPORT AND THE REVIEW OF THE ABSTRACT OF TITLE. THERE MAY BE RIGHT OF WAYS AND/OR COVENANTS AFFECTING THIS PROPERTY NOT SHOWN HEREON. LOCATION OF ALL IMPROVEMENTS WAS BEYOND COMMISSIONED SCOPE OF THIS PROJECT AND HAS BEEN SPECIFICALLY OMITTED. VESTING DOCUMENTS NOT FURNISHED FOR THIS SURVEY.

Dempsey D. Hannah 05/19/2023

DEMPSEY D. HANNAH TEXAS R.P.L.S. NO. 5637 DATE

#	DATE	BY:	DESCRIPTION	CHK
1	05/16/23	MAC	UPDATED RIGHT OF WAY, ADDED ATWS	DDH

PROJECT NO. 19513

PACKET 12.7 July 11, 2023

TRANSGLOBAL SERVICES LLC
TBPELS FIRM# 10194245
201 West Wall Street, Suite 325
Midland, TX 79701
(817) 529-1180 ~ Fax (817) 529-1181

Enterprise Products

F-LINE UPGRADE

THE CITY OF MIDLAND

PROPOSED TEMPORARY RIGHT OF WAY, RIGHT OF WAY, SURFACE SITE & PIPELINE CENTERLINE

SITUATED IN
SECTION 30, BLOCK 36, TOWNSHIP 3 SOUTH
T. & P. RR. CO. SURVEY
ABSTRACT NO. 957
MIDLAND COUNTY, TEXAS

DRAWN BY: JMJ	DATE: 04/26/23	DWG. NO. 19513_TX-MD-0005.00000 REV 1	REV. 1
CHECKED BY: DDH	DATE: 05/02/23		
SCALE: 1"=1000'	PAGE 1 OF 4		

EXHIBIT "A"

CENTERLINE DESCRIPTION

BEING THE CENTERLINE OF A PROPOSED 30 FOOT WIDE RIGHT OF WAY SITUATED IN SECTION 30, BLOCK 36, TOWNSHIP 3 SOUTH, T. & P. RR. CO. SURVEY, ABSTRACT NO. 957, MIDLAND COUNTY, TEXAS. SAID CENTERLINE BEING MORE PARTICULARLY DESCRIBED AS FOLLOWS:

BEGINNING AT A POINT (N: 10642655.99, E:1845143.50) IN SAID SECTION 30, FROM WHICH A 1" IRON PIPE FOUND FOR THE NORTHWEST CORNER OF SAID SECTION 30 BEARS N 20°46'55" W, A DISTANCE OF 4351.64 FEET (TIE);

THENCE S 15°35'26" E A DISTANCE OF 58.03 FEET TO A POINT;
THENCE S 60°35'26" E A DISTANCE OF 73.89 FEET TO A POINT;
THENCE S 14°08'34" E A DISTANCE OF 241.74 FEET TO A POINT;
THENCE S 15°26'17" E A DISTANCE OF 118.23 FEET TO A POINT;
THENCE S 14°42'37" E A DISTANCE OF 82.95 FEET TO A POINT;
THENCE S 14°28'43" E A DISTANCE OF 377.25 FEET TO A POINT;

THENCE S 12°39'35" E A DISTANCE OF 59.58 FEET TO THE POINT OF TERMINATION (N: 10641711.80, E:1845442.44) OF SAID CENTERLINE, AT A POINT IN THE SOUTH BOUNDARY LINE OF SAID SECTION 30, FROM WHICH THE CALCULATED SOUTHEAST CORNER OF SECTION 30 BEARS N 74°54'35" E, A DISTANCE OF 4891.99 FEET (TIE); FROM WHICH A FOUND 4" IRON PIPE BEARS S 75°08'32" W, A DISTANCE OF 172.99 FEET (TIE).

SAID CENTERLINE CONTAINING A TOTAL OF 1011.67 FEET OR 61.31 RODS IN SAID SECTION 30.

NOTES:

1. BEARINGS, DISTANCES, AREA AND COORDINATES SHOWN HEREON ARE CORRELATED TO THE TEXAS COORDINATE SYSTEM OF 1983, TEXAS CENTRAL ZONE (4203). ALL BEARINGS AND DISTANCES SHOWN ARE GRID.
2. LATITUDE & LONGITUDE ARE NAD 83 DECIMAL GEOGRAPHIC.
3. THIS SURVEY WAS PERFORMED WITHOUT THE BENEFIT OF A TITLE REPORT AND THE REVIEW OF THE ABSTRACT OF TITLE. THERE MAY BE RIGHT OF WAYS AND/OR COVENANTS AFFECTING THIS PROPERTY NOT SHOWN HEREON. LOCATION OF ALL IMPROVEMENTS WAS BEYOND COMMISSIONED SCOPE OF THIS PROJECT AND HAS BEEN SPECIFICALLY OMITTED. VESTING DOCUMENTS NOT FURNISHED FOR THIS SURVEY.

#	DATE	BY:	DESCRIPTION	CHK
1	05/16/23	MAC	UPDATED RIGHT OF WAY, ADDED ATWS	DDH

PROJECT NO. 19513

TRANSGLOBAL SERVICES LLC
TBPELS FIRM# 10194245
201 West Wall Street, Suite 325
Midland, TX 79701
(817) 529-1180 ~ Fax (817) 529-1181

PACKET 12.8 July 11, 2023

Enterprise Products

F-LINE UPGRADE
THE CITY OF MIDLAND
PROPOSED TEMPORARY RIGHT OF WAY, RIGHT OF WAY, SURFACE SITE & PIPELINE CENTERLINE
SITUATED IN
SECTION 30, BLOCK 36, TOWNSHIP 3 SOUTH
T. & P. RR. CO. SURVEY
ABSTRACT NO. 957
MIDLAND COUNTY, TEXAS

DRAWN BY: JMJ	DATE: 04/26/23	DWG. NO. 19513_TX-MD-0005.00000 REV 1	REV. 1
CHECKED BY: DDH	DATE: 05/02/23		
SCALE: 1"=1000'	PAGE 2 OF 4		

EXHIBIT "B"

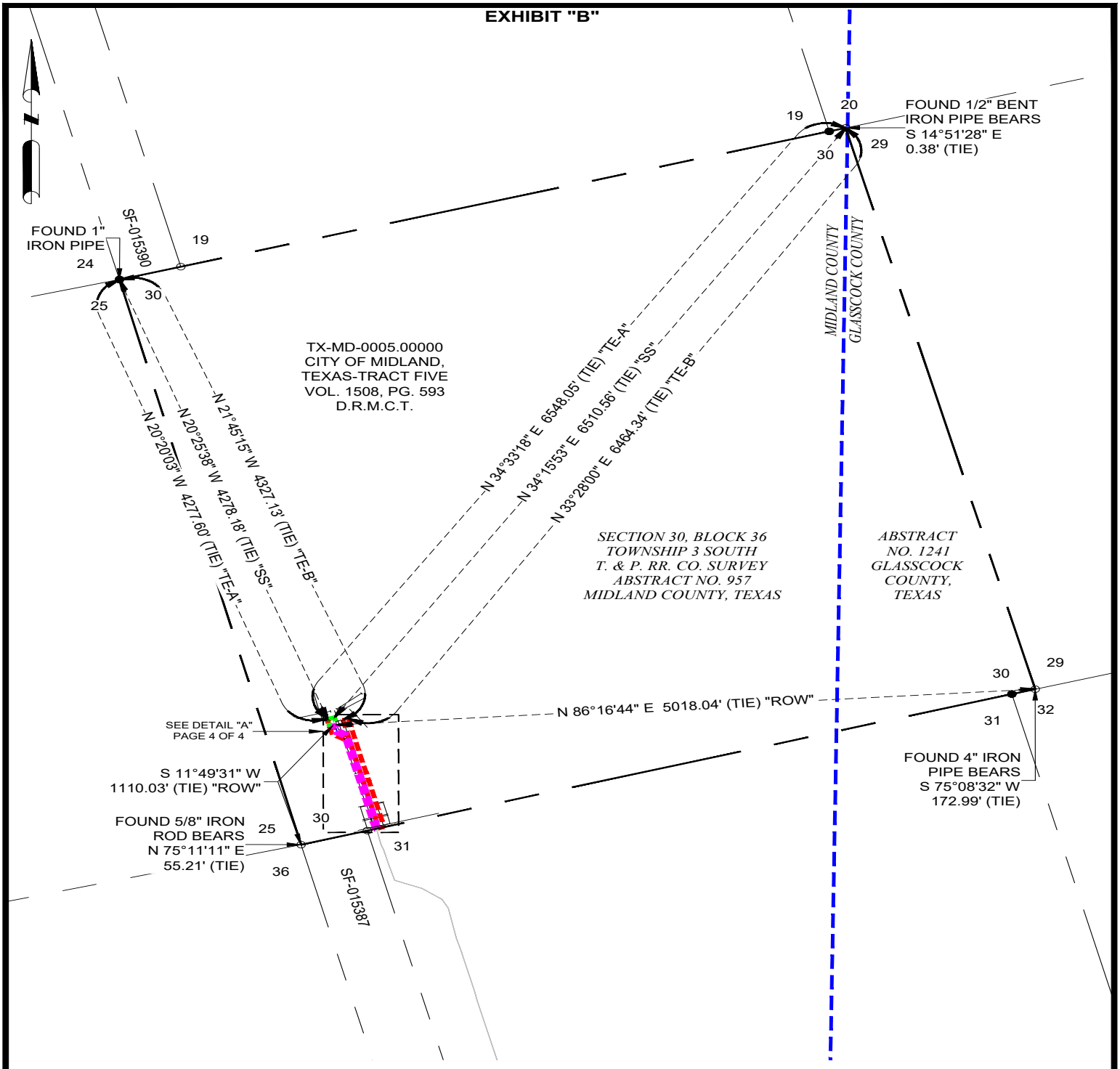

THE POINT OF BEGINNING IS LOCATED APPROXIMATELY 5 MILES SOUTHEAST OF SPRABERRY, TEXAS

1000' 0' 1000'

Scale: 1" = 1000'

LEGEND

- SECTION LINE
- OHE — OVERHEAD ELECTRIC
- APPROXIMATE COUNTY LINE
- TEMPORARY RIGHT OF WAY
- SURFACE SITE
- RIGHT OF WAY
- EXISTING PIPELINE
- X — FENCE LINE
- POWER POLE
- FOUND MONUMENT
- CALCULATED CORNER
- BEARING CHANGE

NOTES:

1. BEARINGS, DISTANCES, AREA AND COORDINATES SHOWN HEREON ARE CORRELATED TO THE TEXAS COORDINATE SYSTEM OF 1983, TEXAS CENTRAL ZONE (4203). ALL BEARINGS AND DISTANCES SHOWN ARE GRID.
2. LATITUDE & LONGITUDE ARE NAD 83 DECIMAL GEOGRAPHIC.
3. THIS SURVEY WAS PERFORMED WITHOUT THE BENEFIT OF A TITLE REPORT AND THE REVIEW OF THE ABSTRACT OF TITLE. THERE MAY BE RIGHT OF WAYS AND/OR COVENANTS AFFECTING THIS PROPERTY NOT SHOWN HEREON. LOCATION OF ALL IMPROVEMENTS WAS BEYOND COMMISSIONED SCOPE OF THIS PROJECT AND HAS BEEN SPECIFICALLY OMITTED. VESTING DOCUMENTS NOT FURNISHED FOR THIS SURVEY.

#	DATE	BY:	DESCRIPTION	CHK
1	05/16/23	MAC	UPDATED RIGHT OF WAY, ADDED ATWS	DDH

PROJECT NO. 19513

TRANSGLOBAL SERVICES LLC
TBPELS FIRM# 10194245
201 West Wall Street, Suite 325
Midland, TX 79701
(817) 529-1180 ~ Fax (817) 529-1181

PACKET 12.9 July 11, 2023

Enterprise Products

F-LINE UPGRADE

THE CITY OF MIDLAND

PROPOSED TEMPORARY RIGHT OF WAY, RIGHT OF WAY, SURFACE SITE & PIPELINE CENTERLINE

SITUATED IN
SECTION 30, BLOCK 36, TOWNSHIP 3 SOUTH
T. & P. RR. CO. SURVEY
ABSTRACT NO. 957
MIDLAND COUNTY, TEXAS

DRAWN BY: JMJ	DATE: 04/26/23	DWG. NO. 19513_TX-MD-0005.00000 REV 1	REV. 1
CHECKED BY: DDH	DATE: 05/02/23		
SCALE: 1"=1000'	PAGE 3 OF 4		

EXHIBIT "B"

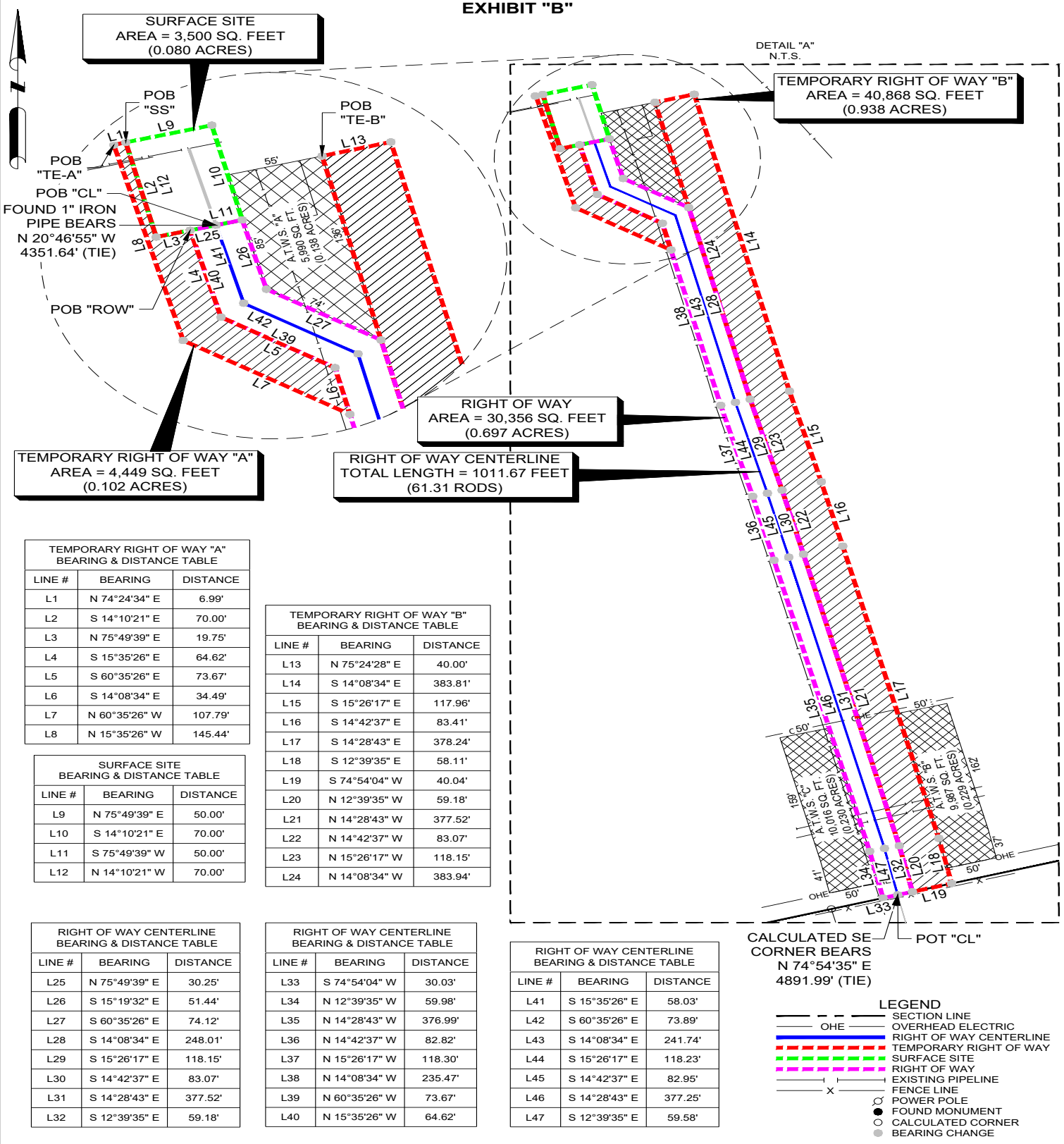

TEMPORARY RIGHT OF WAY "A" BEARING & DISTANCE TABLE		
LINE #	BEARING	DISTANCE
L1	N 74°24'34" E	6.99'
L2	S 14°10'21" E	70.00'
L3	N 75°49'39" E	19.75'
L4	S 15°35'26" E	64.62'
L5	S 60°35'26" E	73.67'
L6	S 14°08'34" E	34.49'
L7	N 60°35'26" W	107.79'
L8	N 15°35'26" W	145.44'

SURFACE SITE BEARING & DISTANCE TABLE		
LINE #	BEARING	DISTANCE
L9	N 75°49'39" E	50.00'
L10	S 14°10'21" E	70.00'
L11	S 75°49'39" W	50.00'
L12	N 14°10'21" W	70.00'

TEMPORARY RIGHT OF WAY "B" BEARING & DISTANCE TABLE		
LINE #	BEARING	DISTANCE
L13	N 75°24'28" E	40.00'
L14	S 14°08'34" E	383.81'
L15	S 15°26'17" E	117.96'
L16	S 14°42'37" E	83.41'
L17	S 14°28'43" E	378.24'
L18	S 12°39'35" E	58.11'
L19	S 74°54'04" W	40.04'
L20	N 12°39'35" W	59.18'
L21	N 14°28'43" W	377.52'
L22	N 14°42'37" W	83.07'
L23	N 15°26'17" W	118.15'
L24	N 14°08'34" W	383.94'

RIGHT OF WAY CENTERLINE BEARING & DISTANCE TABLE		
LINE #	BEARING	DISTANCE
L25	N 75°49'39" E	30.25'
L26	S 15°19'32" E	51.44'
L27	S 60°35'26" E	74.12'
L28	S 14°08'34" E	248.01'
L29	S 15°26'17" E	118.15'
L30	S 14°42'37" E	83.07'
L31	S 14°28'43" E	377.52'
L32	S 12°39'35" E	59.18'

RIGHT OF WAY CENTERLINE BEARING & DISTANCE TABLE		
LINE #	BEARING	DISTANCE
L33	S 74°54'04" W	30.03'
L34	N 12°39'35" W	59.98'
L35	N 14°28'43" W	376.99'
L36	N 14°42'37" W	82.82'
L37	N 15°26'17" W	118.30'
L38	N 14°08'34" W	235.47'
L39	N 60°35'26" W	73.67'
L40	N 15°35'26" W	64.62'

RIGHT OF WAY CENTERLINE BEARING & DISTANCE TABLE		
LINE #	BEARING	DISTANCE
L41	S 15°35'26" E	58.03'
L42	S 60°35'26" E	73.89'
L43	S 14°08'34" E	241.74'
L44	S 15°26'17" E	118.23'
L45	S 14°42'37" E	82.95'
L46	S 14°28'43" E	377.25'
L47	S 12°39'35" E	59.58'

LEGEND
- SECTION LINE
- OHE — OVERHEAD ELECTRIC
- RIGHT OF WAY CENTERLINE
- TEMPORARY RIGHT OF WAY
- SURFACE SITE
- RIGHT OF WAY
- EXISTING PIPELINE
- X — FENCE LINE
- POWER POLE
- FOUND MONUMENT
- CALCULATED CORNER
- BEARING CHANGE

NOTES:

1. BEARINGS, DISTANCES, AREA AND COORDINATES SHOWN HEREON ARE CORRELATED TO THE TEXAS COORDINATE SYSTEM OF 1983, TEXAS CENTRAL ZONE (4203). ALL BEARINGS AND DISTANCES SHOWN ARE GRID.
2. LATITUDE & LONGITUDE ARE NAD 83 DECIMAL GEOGRAPHIC.
3. THIS SURVEY WAS PERFORMED WITHOUT THE BENEFIT OF A TITLE REPORT AND THE REVIEW OF THE ABSTRACT OF TITLE. THERE MAY BE RIGHT OF WAYS AND/OR COVENANTS AFFECTING THIS PROPERTY NOT SHOWN HEREON. LOCATION OF ALL IMPROVEMENTS WAS BEYOND COMMISSIONED SCOPE OF THIS PROJECT AND HAS BEEN SPECIFICALLY OMITTED. VESTING DOCUMENTS NOT FURNISHED FOR THIS SURVEY.

#	DATE	BY:	DESCRIPTION	CHK
1	05/16/23	MAC	UPDATED RIGHT OF WAY, ADDED ATWS	DDH

PROJECT NO. 19513

PACKET 12.10 July 11, 2023

TRANSGLOBAL SERVICES LLC
TBPELS FIRM# 10194245
201 West Wall Street, Suite 325
Midland, TX 79701
(817) 529-1180 ~ Fax (817) 529-1181

Enterprise Products

F-LINE UPGRADE

THE CITY OF MIDLAND

PROPOSED TEMPORARY RIGHT OF WAY, RIGHT OF WAY, SURFACE SITE & PIPELINE CENTERLINE

SITUATED IN
SECTION 30, BLOCK 36, TOWNSHIP 3 SOUTH
T. & P. RR. CO. SURVEY
ABSTRACT NO. 957
MIDLAND COUNTY, TEXAS

DRAWN BY: JMJ	DATE: 04/26/23	DWG. NO. 19513_TX-MD-0005.00000 REV 1	REV. 1
CHECKED BY: DDH	DATE: 05/02/23		
SCALE: 1"=1000'	PAGE 4 OF 4		

RIGHT OF WAY LICENSE

THE STATE OF TEXAS §
§ KNOW ALL MEN BY THESE PRESENTS:
COUNTY OF MIDLAND §

Date:	July 12, 2023
Licensor:	CITY OF MIDLAND, TEXAS, a home-rule municipal corporation
Licensor's Representative:	Morris Williams, Jr., Interim City Manager
Licensor's Mailing Address:	P.O. Box 1152 Midland, Texas 79702
Licensee:	**Enterprise Navitas Midstream Midland Basin LLC**
Licensee's Representative:	**Cody B. Trevino**
Licensee's Mailing Address:	1100 Louisiana Street, Suite 1000 Houston, Texas 77002
Property:	As described in Article III below
License Number:	**23-329-008**

Licensee desires use of certain Property (as defined below) owned by Licensor in Midland County, Texas, for purposes set forth below. Licensee acknowledges and agrees that it must obtain a license (the "License") in order to use the public lands of Licensor.

W I T N E S S E T H:

For and in consideration of the execution of this license (this "License") and the mutual promises and covenants of the parties hereto, it is mutually promised, understood and agreed as follows:

I. Term

A. Term. This License shall be for a term of ten (10) years commencing on the date of this License (the "Commencement Date") unless terminated earlier as provided hereafter.

B. Termination. Licensor may terminate this License if Licensee fails to pay, when due, any amount owing under this License and that failure continues for sixty (60) days or, if Licensee commits any material breach or material default in performance of any obligation, prohibition, restriction, provision or covenant contained in this License, and the breach or default continues for a period of thirty (30) days after Licensor delivers notice to Licensee reasonably detailing the breach or default.

Additionally, Licensor may terminate this License at will for any or no reason upon giving at least three hundred sixty-five (365) days' written notice to Licensee. The parties to this License understand and agree that it is in Licensor's sole discretion to terminate this License during the term of this License without penalty to Licensor. Licensee has no expectation and has received no guarantees that this License will not be terminated before the end of the License term. The parties have bargained for the flexibility of terminating this License upon tender of the requisite notice at any time during the term of this License. All work and services under this License shall be suspended upon termination of this License.

Upon expiration or termination of this License, Licensee shall remove all equipment and structures associated with the undertakings contemplated by this License. After removal of all equipment and structures associated with the undertakings contemplated by this License, the surface of the Property shall be restored at the expense of Licensee to its original condition, as close thereto as may be practical, subject to the approval of Licensor upon inspection by Licensor's Representative, which approval shall not be unreasonably withheld. All of said work shall be completed within one hundred eighty (180) days after the expiration or termination of this License. All of the terms, provisions and requirements of this paragraph shall survive the expiration or termination of this License.

II. Financial Consideration

A. License Fee. A license fee in the amount of FORTY-SIX THOUSAND EIGHT HUNDRED TWENTY-TWO and 50/100 Dollars ($46,822.50) ("License Fee") shall be due and payable on or prior to the Commencement Date.

In the event Licensor terminates this License pursuant to the provisions of Section I.B., Licensor agrees to refund to Licensee a pro rata share of the License Fee actually paid by Licensee to Licensor for that portion of the remaining term that is being terminated. For the avoidance of doubt, the amount of any refund payable to Licensee pursuant to this paragraph shall be determined net of any costs or expenses incurred by Licensor in connection with Licensee's unfulfilled obligations under this License (if any).

B. Application Fee. On or prior to the Commencement Date of this License, Licensee shall pay a non-refundable one-time fee of One Thousand and No/100 Dollars ($1,000.00) to Licensor's Representative. Said fee shall revert to Licensor and Licensee shall have no claim to said fee. The fee shall be used to process the application for this License.

C. Delivery of Payment. Payment of the above fees shall be made to Licensor at the office of Licensor's Representative, Attn: Right of Way Manager, P.O. Box 1152, Midland, Texas, 79702. Payment of the above fees shall be exclusive of and in addition to all general municipal taxes of whatever nature, including but not limited to ad valorem taxes and special taxes and assessments for public improvements.

D. Late Payment. Licensee's failure to make payment of any of the above fees within thirty (30) days after such fee is due shall constitute a late payment and Licensee shall pay Licensor a late charge of five percent (5%) of such fee.

III. Use

A. Permitted Use. Licensor does hereby grant unto Licensee, the right to enter upon the Property, being forty (40) feet in width of the locations as shown on **Exhibits A and B** attached hereto and incorporated herein for the purpose of operating, repairing, maintaining, replacing and removing, thereon, along the herein described locations, a poly construction pipeline, not to exceed twenty-four (24) inches in diameter, for the transportation of natural gas and a three thousand five hundred (3,500) square foot surface site for an above ground valve connection and to have the right of ingress and egress at convenient points for such purpose and said construction width shall revert to thirty (30) feet after the pipeline is completed (the "Property"). **Licensee shall provide Licensor with a complete as-built survey within sixty (60) days of completion of the pipeline(s) and facilities described herein. The parties agree Licensee's failure to provide Licensor with a complete as-built survey within sixty (60) days of completion of the pipeline(s) and facilities described herein may result in the termination of this License. The decision to accept a complete as-built survey after the sixty-day deadline prescribed herein, or, conversely, to terminate this License shall be in the sole and absolute discretion of Licensor.**

B. Road Repair. Licensee covenants and agrees that it will repair, at its own expense, any of Licensor's roads that Licensee, its employees, contractors, representatives, agents or assigns damage on Licensor's property, so that such roads will comply with Licensor's standard specifications.

C. Utility Repair. Licensee covenants and agrees that Licensee shall, at its own expense, repair all water lines, sewer lines, service lines, water meters and other utility lines owned by Licensor that Licensee, its employees, contractors, representatives, agents or assigns, damage so that such water lines, sewer lines, water meters and other utility lines shall comply with Licensor's standard specifications.

D. Pipeline Depth. Licensee covenants and agrees that it will bury the pipeline to be constructed hereunder no less than thirty-six (36) inches in depth. All backfill used in burying such pipeline shall be compacted to a density of ninety percent (90%), except where such pipeline crosses under a paved or traveled portion of any City of Midland right of way where such backfill shall be compacted to a density of ninety-five percent (95%). Licensor shall be afforded the opportunity to test the density on all backfill. Notwithstanding any provision to the contrary contained herein, Licensee covenants and agrees that, at any point that Licensee's pipeline intersects with a City of Midland utility line location, the pipeline shall be bored at a depth of at least (i) nine (9) feet under all City of Midland water utility lines and (ii) two (2) feet under all City of Midland sewer utility lines. Licensee agrees that it shall comply with 30 Tex. Admin. Code § 290.44(e), as amended, to the extent applicable to this License.

E. Approval of Bids. Before Licensee seeks bids on any phase of the repair of public streets, alleys, water lines, sewer lines or any other public utilities, Licensee shall first obtain written approval of the specifications therefor from Licensor's Representative, which approval shall be at Licensor's Representative's sole discretion.

F. Reservation of Rights. Licensor expressly reserves the right to install, repair, or reconstruct streets or roads and all ancillary public uses usual and customary in connection with streets and roads, expressly including but not limited to drainage facilities and related structures in the rights

of way used and occupied by Licensee.

Licensor reserves the right to lay and permit to be laid, sewer, gas, water, and other pipelines or cables and conduits, and to do and permit to be done, any underground or overhead installation or improvement that may be deemed necessary or proper by the governing body of Licensor, in, on, across, along, over, under, and through any property occupied by Licensee. In permitting such work to be done, Licensor shall not be liable to Licensee for any damage so caused to Licensee's system or property, **NOR SHALL LICENSOR BE LIABLE TO LICENSEE FOR ANY DAMAGES TO LICENSEE'S PIPELINE OR OTHER PERMITTED FACILITIES ARISING OUT OF THE NEGLIGENCE BY LICENSOR, ITS EMPLOYEES, OFFICERS OR AGENTS, OR LICENSOR'S CONTRACTORS OR SUBCONTRACTORS.** If Licensor requires Licensee to remove, alter, change, adapt, or conform Licensee's facilities because of changes in the grade or construction of a street or in the location or manner of constructing a water pipe, sewer pipe, or other surface, underground or aboveground structure owned by Licensor, Licensee shall make the alterations or changes as soon as practicable, and in no event longer than one hundred eighty (180) days, when ordered in writing by Licensor, without claim for reimbursement for the cost of the relocation or for damages against Licensor. If these requirements impose a financial hardship upon Licensee, Licensee shall have the right to present alternative proposals for Licensor's consideration.

G. Non-exclusive. Licensor expressly reserves the full right to grant other easements or rights of way crossing or running parallel with the rights of way used by Licensee.

H. Abandonment. It is especially provided, however, that as an express condition of this License, and not as a mere covenant, in the event Licensee abandons any equipment or appurtenances associated with the undertakings contemplated by this License, or the Property ceases to be used for the purposes enumerated herein for any period of twelve (12) consecutive months, or longer, other than the time elapsing between the date hereof and construction, and upon giving Licensee one hundred and twenty (120) days' written notice, then and in that event, this License shall automatically terminate and revert to Licensor, its successors or assigns, free and clear of any right, title, or interest of Licensee.

I. Approval of Specifications. In the event Licensee desires to reconstruct, repair, alter, replace or remove any pipeline or other permitted facilities built hereunder, Licensee shall submit the plans and specifications that pertain to the rebuilding or repairs of Licensor's streets and roads and the rebuilding or repairs of any of Licensor's public utilities to Licensor's Representative for his or her prior written approval, which approval shall be at Licensor's Representative's sole discretion. In the event of emergency repairs necessary to restore service, Licensee shall notify Licensor's Representative before making any repairs if during a Licensor workday. If not on a workday, Licensee shall notify Licensor's Representative on the first workday after repairs have begun.

J. Gates and Fences. Without altering or expanding the limitations on ingress, egress and access to the Property set forth in Paragraph A. of Article III above, Licensee agrees to use existing gates and roadways where available, to enter, leave and cross the Property; provided that Licensee shall not use any road marked "Closed". Licensee and all persons entering or leaving the Property in connection with Licensee's operations hereunder shall keep all outside and interior gates securely closed except during operations related to this License. Licensee shall keep all outside gates, and all other gates designated by Licensor, securely locked except during operations related to this

License. At any gate that is to be locked, Licensor may install its own lock in addition to Licensee's lock.

Licensee agrees that Licensee shall not cut or go over any fence at any time or in connection with any operations on the Property without first obtaining Licensor's express prior consent thereto in writing. All gates or openings in fences shall be at mutually agreeable location(s) between Licensee and Licensor and shall be constructed as reasonably required by Licensor. Upon the termination of this License, at Licensor's election, gates in fences shall be left in place and shall thereafter be owned by Licensor or Licensee shall remove such gates and restore the fence to its original condition as nearly as reasonably practicable. The terms, provisions and requirements of this provision shall survive the termination or expiration of this License.

K. Trash. Licensee shall keep the Property free of trash and debris at all times. Under no circumstances, will Licensee be allowed to bury any trash, debris or foreign material of any kind on or under the Property. Licensor shall have the right to expel and permanently ban from the Property any person observed disposing of trash on the Property. Upon the completion of any operations, all ribbons, flags, stakes and similar items shall by promptly removed from the Property.

L. Hunting, Fishing and Alcohol Prohibited. No agent, employee, representative, contractor or subcontractor of Licensee or any other person allowed to enter the Property by Licensee shall be permitted to hunt, fish, trap, camp, picnic, ride motorcycles or four-wheelers or otherwise conduct any social gathering on the Property, nor shall any such persons be permitted to bring firearms, archery equipment, dogs, alcoholic beverages or illegal drugs on the Property at any time. Violations of this provision shall cause the violator to be regarded as a trespasser and subject to prosecution under trespass laws of the State of Texas. Licensor shall have the right to expel and permanently ban from the Property any person observed on the Property in violation of this provision.

M. Storage of Machinery and Equipment. Licensee shall use no part of the Property to store machinery, equipment, or other property of Licensee while it is not being used.

N. Additional Reservations. Licensor reserves the right to use the surface, subsurface or airspace on, below or above the land covered by this License for any purpose allowed by law and deemed necessary or proper by Licensor and to do and permit to be done, any work in connection therewith which may be deemed necessary or proper by Licensor in, on, across, along, over, under, and through any portion of the Property. In the event of such work in connection with said purposes it shall be deemed necessary or proper by Licensor, at Licensor's sole discretion, to alter, change, or relocate any pipeline, property, or casing of Licensee, such alteration or change or relocation shall be commenced and completed by Licensee within one hundred eighty (180) days after being ordered in writing by Licensor pursuant to directions from Licensor without any claim for reimbursement for the cost of the alteration, change or relocation or damages against Licensor. The relocation, change, or alteration shall be at the sole cost of Licensee. Provided, however, that Licensee shall at all times be entitled to receive from appropriate governmental bodies, excluding Licensor, payment for alteration, change or relocation of its system to which it may be lawfully entitled to under applicable federal or state laws with respect to relocation payments. Without limiting the foregoing, Licensor expressly reserves the full right to grant other licenses, easements and/or rights-of-way in, on, across, along, over, under or through all or any portion of the Property.

Licensor expressly reserves the right to use and grant to third parties the right to use all or any portion of the Property and the surface, subsurface or airspace on, below or above the Property for any purpose.

IV. Standard General Conditions

A. Insurance. Licensee shall at all times during the term of this License maintain and keep in full force and effect insurance in the following types and minimum amounts with companies authorized to do business in the State of Texas:

Commercial General Liability (including Contractual liability):	
■ Personal Injury:	$1,000,000.00 per person $1,000,000.00 per occurrence
■ Property Damage:	$100,000.00 per occurrence
Business Automobile Liability:	$1,000,000.00 combined single limit-- Personal Injury and Property Damage
Workers' Compensation:	Statutory limits
Employers' Liability:	$1,000,000.00 per accident or occurrence
Umbrella Liability:	$10,000,000.00 each occurrence $10,000,000.00 aggregate

The Commercial General Liability shall be on an occurrence basis. This insurance shall name Licensor as an additional insured and all insurance shall waive subrogation in favor of Licensor.

The Workers' Compensation coverage provided by Licensee shall inure to the benefit of employees injured during the course and scope of their employment by Licensee pursuant to this License. The Workers' Compensation insurance shall waive all rights of subrogation against Licensor.

The Business Automobile Liability insurance provided by Licensee shall cover any auto for bodily injury and property damage, including owned vehicles, hired and non-owner vehicles, and employee non-ownership, and the amount of such policy shall be a minimum of $1,000,000.00 covering any vehicle used for the execution of the work that is the subject of this License. This insurance shall name Licensor as an additional insured and all insurance shall waive subrogation in favor of Licensor.

All insurance required pursuant to this License, except for Worker's Compensation Insurance, shall name Licensor as an additional insured. All insurance required pursuant to this License, including Worker's Compensation Insurance, shall provide for a waiver of subrogation as to Licensor. The parties agree that, prior to the execution of this License, Licensee shall provide one or more certificates of insurance showing that the requirements of this article have been met. Licensor shall determine, in its sole discretion, whether such requirements have been satisfied.

Licensor shall be provided written notice by Licensee's insurance provider not later than thirty

(30) days prior to any reduction or termination of such coverage. Licensor shall not be required to provide any insurance whatsoever pursuant to this License.

Licensee shall contractually require all contractors, subcontractors, and sub-subcontractors that work on any portion of the work that is the subject of this License to obtain insurance coverage that meets or exceeds the policy requirements and minimum amounts as required herein and name the City of Midland as an additional insured (except as to Worker's Compensation Insurance). Licensee certifies that the one or more certificates of insurance provided as required herein complies with the requirements of Chapter 1811 of the Texas Insurance Code. Licensee shall not use an unapproved certificate of insurance or insert inappropriate language on a certificate. Compliance with state law is the sole responsibility of Licensee.

B. Indemnity. TO THE FULLEST EXTENT PERMITTED BY APPLICABLE LAW, LICENSEE, ITS SUCCESSORS AND ASSIGNS, AGREE TO INDEMNIFY, PROTECT, DEFEND AND HOLD HARMLESS LICENSOR AND LICENSOR'S REPRESENTATIVES, AGENTS, ATTORNEYS, EMPLOYEES, SUCCESSORS AND ASSIGNS (COLLECTIVELY, "INDEMNITEES") FOR, FROM AND AGAINST ANY AND ALL CLAIMS, LOSSES, DAMAGES, LIABILITIES, LIENS, FINES, PENALTIES, CAUSES OF ACTION, SUITS, CHARGES, JUDGMENTS, ADMINISTRATIVE ORDERS, REMEDIATION REQUIREMENTS, ENFORCEMENT ACTIONS OF ANY KIND, PERSONAL INJURIES, PROPERTY DAMAGE, AND ALL COSTS AND EXPENSES INCURRED IN CONNECTION THEREWITH (INCLUDING, BUT NOT LIMITED TO, ATTORNEYS' FEES AND EXPENSES, INCLUDING, WITHOUT LIMITATION, ALL ATTORNEYS' FEES AND EXPENSES INCURRED IN ENFORCING THIS INDEMNITY) OF ANY NATURE, KIND OR DESCRIPTION OF ANY PERSON OR ENTITY, DIRECTLY OR INDIRECTLY ARISING OUT OF, CAUSED BY OR RESULTING FROM (IN WHOLE OR IN PART) THIS LICENSE, LICENSEE'S USE OF OR ACTIVITIES ON THE PROPERTY OR ANY OTHER PROPERTY OWNED BY LICENSOR, OR ANY ACT OR OMISSION OF LICENSEE, ANY CONTRACTOR, SUBCONTRACTOR, ANYONE DIRECTLY OR INDIRECTLY EMPLOYED BY THEM, OR ANYONE THAT THEY CONTROL OR EXERCISE CONTROL OVER (COLLECTIVELY, "LIABILITIES"), EVEN IF SUCH LIABILITIES ARISE FROM OR ARE ATTRIBUTED, IN WHOLE OR IN PART, TO THE NEGLIGENCE OF ANY INDEMNITEE. LICENSEE SHALL PROMPTLY ADVISE LICENSOR OF ANY ACTION, ADMINISTRATIVE OR LEGAL PROCEEDING OR INVESTIGATION TO WHICH THIS INDEMNIFICATION MAY APPLY, AND OF WHICH LICENSEE HAS RECEIVED NOTICE, AND LICENSEE, AT LICENSEE'S EXPENSE, SHALL ASSUME ON BEHALF OF LICENSOR (AND THE OTHER INDEMNITEES) AND CONDUCT WITH DUE DILIGENCE AND IN GOOD FAITH THE DEFENSE THEREOF WITH COUNSEL REASONABLY SATISFACTORY TO LICENSOR; PROVIDED, HOWEVER, THAT ANY INDEMNITEE SHALL HAVE THE RIGHT, AT ITS OPTION, TO BE REPRESENTED THEREIN BY COUNSEL OF ITS OWN SELECTION AND AT ITS OWN EXPENSE. IN THE EVENT OF FAILURE BY LICENSEE TO ASSUME THE DEFENSE OF LICENSOR IN ACCORDANCE WITH THIS INDEMNIFICATION, LICENSOR, AT ITS OPTION, AND WITHOUT RELIEVING LICENSEE OF ITS OBLIGATION HEREUNDER, MAY ASSUME SUCH DEFENSE, AFTER WRITTEN NOTICE THEREOF TO LICENSEE AND LICENSEE'S FAILURE TO RESPOND THERETO WITHIN TEN (10) BUSINESS DAYS AFTER

RECEIPT OF SUCH NOTICE (SAID TEN (10) DAY PERIOD SHALL NOT APPLY IN ANY CASE WHERE IMMEDIATE ANSWERS, RESPONSES, OR OTHER AFFIRMATIVE ACTION IS REQUIRED TO PRESERVE THE RIGHTS OF LICENSOR) BUT ALL REASONABLE COSTS AND EXPENSES SO INCURRED BY LICENSOR IN THAT EVENT SHALL BE REIMBURSED BY LICENSEE TO LICENSOR, TOGETHER WITH INTEREST ON THE SAME FROM THE DATE ANY SUCH EXPENSE WAS PAID BY LICENSOR UNTIL REIMBURSED BY LICENSEE, AT THE RATE OF INTEREST PROVIDED TO BE PAID ON JUDGMENTS, BY THE LAWS OF THE STATE OF TEXAS.

WITHOUT LIMITING THE FOREGOING, LICENSEE AGREES THAT LICENSEE SHALL INDEMNIFY, PROTECT, DEFEND AND SAVE LICENSOR HARMLESS FROM ANY AND ALL CLAIMS, LIENS, JUDGMENTS, SUITS, CAUSES OF ACTION, AND DEMANDS OF ANY SUBCONTRACTORS, LABORERS, WORKMEN, MECHANICS, MATERIALMEN, OR FURNISHERS OF MACHINERY AND PARTS THEREOF, EQUIPMENT, POWER TOOLS, OR SUPPLIES, IN CONNECTION WITH THE CONSTRUCTION, OPERATION, REPAIR, MAINTENANCE, REPLACEMENT OR REMOVAL OF THE PIPELINE OR OTHER PERMITTED FACILITIES DESCRIBED HEREIN.

WITHOUT LIMITING ANY OF THE FOREGOING, LICENSEE SHALL INDEMNIFY, PROTECT AND HOLD HARMLESS AND DEFEND EACH INDEMNITEE FROM ALL LIABILITIES, SUITS, ACTIONS, CLAIMS, DAMAGES, CAUSES OF ACTION, CHARGES, JUDGMENTS, PERSONAL INJURIES, ACCIDENTAL DEATH, PROPERTY DAMAGE, LOSSES AND EXPENSES OF ANY CHARACTER WHATSOEVER, INCLUDING, WITHOUT LIMITATION, ATTORNEY'S FEES, BROUGHT FOR OR ON ACCOUNT OF ANY INJURIES OR DAMAGES RECEIVED OR SUSTAINED BY ANY PERSON OR PERSONS OR PROPERTY ON ACCOUNT OF ANY NEGLIGENT ACT OF ANY INDEMNITEE, WHETHER SUCH NEGLIGENT ACT WAS THE SOLE PROXIMATE CAUSE OF THE INJURY OR DAMAGE OR A PROXIMATE CAUSE JOINTLY AND CONCURRENTLY WITH LICENSEE OR LICENSEE'S EMPLOYEES', REPRESENTATIVES', AGENTS', CONTRACTORS' OR SUBCONTRACTORS' NEGLIGENCE, IN THE EXECUTION, SUPERVISION AND OPERATIONS GROWING OUT OF OR IN ANY WAY CONNECTED WITH THE PERFORMANCE OF THIS LICENSE, INCLUDING, WITHOUT LIMITATION, SUCH NEGLIGENT ACTS ARISING FROM OR IN ANY WAY CONNECTED WITH THE PLACEMENT, CONSTRUCTION, OPERATION, REPAIR, MAINTENANCE, REPLACEMENT OR REMOVAL OF ANY PART OF LICENSEE'S PIPELINE OR PERMITTED FACILITIES ON LICENSOR'S PROPERTY. LICENSEE WILL BE REQUIRED TO PAY ANY JUDGMENT WITH COSTS WHICH MAY BE OBTAINED AGAINST LICENSOR OR ANY INDEMNITEE, INCLUDING RELATED ATTORNEY'S FEES.

WITHOUT LIMITING ANY OF THE FOREGOING, LICENSEE, ITS SUCCESSORS AND ASSIGNS, SHALL INDEMNIFY, PROTECT, DEFEND AND HOLD INDEMNITEES HARMLESS FROM AND AGAINST ALL CLAIMS, LOSSES, DAMAGES, LIABILITIES, LIENS, FINES, PENALTIES, CAUSES OF ACTION, SUITS, CHARGES, JUDGMENTS, ADMINISTRATIVE ORDERS, REMEDIATION

REQUIREMENTS, ENFORCEMENT ACTIONS OF ANY KIND, PERSONAL INJURIES, PROPERTY DAMAGE, AND ALL COSTS AND EXPENSES INCURRED IN CONNECTION THEREWITH (INCLUDING, BUT NOT LIMITED TO, ATTORNEYS' FEES AND EXPENSES, INCLUDING, WITHOUT LIMITATION, ALL ATTORNEYS' FEES AND EXPENSES INCURRED IN ENFORCING THIS INDEMNITY) OF ANY NATURE, KIND OR DESCRIPTION OF ANY PERSON OR ENTITY, DIRECTLY OR INDIRECTLY ARISING OUT OF, CAUSED BY OR RESULTING FROM (IN WHOLE OR IN PART) (i) FAILURE OF LICENSEE, ANY CONTRACTOR, SUBCONTRACTOR, ANYONE DIRECTLY OR INDIRECTLY EMPLOYED BY THEM, OR ANYONE THAT THEY CONTROL OR EXERCISE CONTROL OVER (COLLECTIVELY, THE "INDEMNIFYING PARTIES"), TO COMPLY WITH ALL APPLICABLE LOCAL, FEDERAL AND/OR STATE ENVIRONMENTAL LAWS, INCLUDING BUT NOT LIMITED TO THE RESOURCE CONSERVATION AND RECOVERY ACT (RCRA) AND THE COMPREHENSIVE ENVIRONMENTAL RESPONSE, COMPENSATION, AND LIABILITY ACT (CERCLA) (AS THEY MAY BE REAUTHORIZED AND/OR AMENDED) AND ALL OTHER LOCAL, FEDERAL AND STATE LAWS, IN CONNECTION WITH OR RELATED TO ANY INDEMNIFYING PARTY'S OPERATIONS OR ACTIVITIES ON THE PROPERTY, OR (ii) ANY INDEMNIFYING PARTY'S HANDLING, STORING, RELEASING OR TRANSPORTING OR DISPOSING OF ALL SUBSTANCES, INCLUDING BUT NOT LIMITED TO HAZARDOUS SUBSTANCES AND HAZARDOUS WASTES, ON OR FROM THE PROPERTY OR ANY OTHER LANDS OF LICENSOR.

IT IS THE INTENTION OF THE PARTIES HERETO THAT THE PROVISIONS OF THIS INDEMNIFICATION SHALL APPLY TO AND PROTECT EACH INDEMNITEE FROM THE CONSEQUENCES OF STRICT LIABILITY IMPOSED OR THREATENED TO BE IMPOSED ON SUCH INDEMNITEE, AS WELL AS FROM THE CONSEQUENCES OF THE NEGLIGENCE OF ANY INDEMNITEE, WHETHER OR NOT THAT NEGLIGENCE IS A CONTRIBUTING OR CONCURRING CAUSE OF ANY LIABILITY INDEMNIFIED AGAINST IN THIS ARTICLE IV.B.

THE TERMS, PROVISIONS, REQUIREMENTS AND OBLIGATIONS OF THIS ARTICLE IV.B. SHALL SURVIVE TERMINATION OR EXPIRATION OF THIS LICENSE, AND SHALL NOT BE LIMITED BY OR TO DAMAGES, COMPENSATION OR BENEFITS PAYABLE UNDER INSURANCE POLICIES, WORKER'S COMPENSATION ACTS, DISABILITY BENEFIT ACTS OR OTHER EMPLOYEES' BENEFIT ACTS.

C. Assignment. The provisions of this License shall inure to the benefit of and be binding upon Licensor and Licensee and their respective successors and permitted assigns. The rights and privileges granted by Licensor under this License inure to the benefit of Licensee. No rights, privileges or obligations hereunder shall be assignable by Licensee without the express prior written consent of Licensor. Any required consent is to be evidenced by a letter written by Licensor's City Manager that fully recites the terms and conditions, if any, upon which consent is given. The granting of consent is in the sole discretion of Licensor's City Manager

D. Independent Contractor. It is expressly understood and agreed that Licensee shall perform all work described herein as an independent contractor and not as an officer, agent, servant or

employee of Licensor; that Licensee shall have exclusive control of and the exclusive right to control the details of the work performed hereunder, and all persons performing the same; and shall be solely responsible for the acts and omissions of its officers, agents, employees, contractors and subcontractors; that the doctrine of respondeat superior shall not apply as between Licensor and Licensee, its officers, agents, employees, contractors and subcontractors; and that nothing herein shall be construed as creating a partnership or joint enterprise between Licensor and Licensee. No person performing any of the work described hereunder shall be considered an officer, agent, servant or employee of Licensor. Further, it is specifically understood and agreed that nothing in this License is intended or shall be construed as creating a "Community of Pecuniary Interest" or "An Equal Right of Control" which would give rise to vicarious liability. Licensee shall be an independent contractor under this License and shall assume all of the rights, obligations and liabilities applicable to it as such independent contractor hereunder. Licensor does not have the power to direct the order in which the work is done. Licensor shall not have the right to control the means, methods or details of Licensee's work. Licensee shall assume exclusive responsibility for the work. Licensee is entirely free to do the work in its own way. The provisions of this subparagraph (D.) shall not be deemed or construed as contradicting, limiting or conflicting with the provisions of subparagraph (M.) below.

E. Attorney Fees. SHOULD LICENSOR BE REQUIRED TO RESORT TO EMPLOYMENT OF ATTORNEYS TO ENFORCE THIS LICENSE, OR ANY OF ITS RIGHTS UNDER THIS LICENSE, LICENSOR SHALL BE ENTITLED TO REIMBURSEMENT FROM LICENSEE FOR LICENSOR'S ATTORNEYS' FEES. LICENSEE SHALL REIMBURSE LICENSOR FOR LICENSOR'S ATTORNEYS' FEES INCURRED IN CONNECTION WITH THE PREPARATION AND NEGOTIATION OF THIS LICENSE. BY EXECUTING THIS LICENSE, LICENSEE AGREES TO WAIVE, AND DOES HEREBY KNOWINGLY, CONCLUSIVELY, VOLUNTARILY AND INTENTIONALLY WAIVE, ANY CLAIM IT HAS OR MAY HAVE IN THE FUTURE AGAINST LICENSOR REGARDING THE AWARD OF ATTORNEY'S FEES, WHICH ARE IN ANY WAY RELATED TO THIS LICENSE, OR THE CONSTRUCTION, INTERPRETATION, VALIDITY OR BREACH OF THIS LICENSE. WITHOUT LIMITING THE FOREGOING, LICENSEE SPECIFICALLY AGREES THAT IF LICENSEE BRINGS OR COMMENCES ANY LEGAL ACTION OR PROCEEDING RELATED TO THIS LICENSE, OR TO THE CONSTRUCTION, INTERPRETATION, VALIDITY OR BREACH OF THIS LICENSE, INCLUDING BUT NOT LIMITED TO ANY ACTION PURSUANT TO THE PROVISIONS OF THE TEXAS UNIFORM DECLARATORY JUDGMENTS ACT (TEXAS CIVIL PRACTICE AND REMEDIES CODE SECTION 37.001, ET SEQ., AS AMENDED), OR CHAPTER 271 OF THE TEXAS LOCAL GOVERNMENT CODE, LICENSEE AGREES TO ABANDON, WAIVE AND RELINQUISH ANY AND ALL RIGHTS TO THE RECOVERY OF ATTORNEY'S FEES TO WHICH LICENSEE MIGHT OTHERWISE BE ENTITLED.

LICENSEE AGREES THAT THIS IS THE VOLUNTARY AND INTENTIONAL RELINQUISHMENT AND ABANDONMENT OF A PRESENTLY EXISTING, KNOWN RIGHT. LICENSEE ACKNOWLEDGES THAT IT UNDERSTANDS ALL TERMS AND CONDITIONS OF THIS LICENSE. LICENSEE FURTHER ACKNOWLEDGES AND AGREES THAT THERE WAS AND IS NO DISPARITY OF BARGAINING POWER BETWEEN LICENSOR AND LICENSEE. THIS SECTION SHALL NOT BE CONSTRUED OR INTERPRETED AS A WAIVER OF GOVERNMENTAL IMMUNITY.

LICENSEE AND LICENSOR ARE RELYING ON THEIR OWN JUDGMENT. EACH PARTY HAD THE OPPORTUNITY TO DISCUSS THIS LICENSE WITH LEGAL COUNSEL PRIOR TO ITS EXECUTION.

F. Governing Law & Venue. All performance and payments made pursuant to this License shall be deemed to have occurred in Midland County, Texas. Exclusive venue for any claims, suits or any other action arising from or connected in any way to this License, or the performance of this License shall be in Midland County, Texas. The obligations and undertakings of each of the parties to this License shall be deemed to have been performed in Midland County, Texas. This License shall be construed, interpreted and enforced under the laws of the State of Texas. The laws of the State of Texas shall govern, construe and enforce all the rights and duties of the parties, including but not limited to tort claims and any and all other claims or disputes, arising from or relating in any way to the subject matter of this License, without regard to conflict of laws and rules that would direct application of the laws of another jurisdiction.

G. Release. NOTWITHSTANDING ANY OTHER PROVISIONS OF THIS LICENSE, LICENSEE HEREBY RELEASES, ACQUITS, RELINQUISHES AND FOREVER DISCHARGES LICENSOR, AND LICENSOR'S EMPLOYEES AND OFFICERS FROM ANY AND ALL DEMANDS, CLAIMS, DAMAGES OR CAUSES OF ACTION OF ANY KIND WHATSOEVER WHICH LICENSEE HAS OR MIGHT HAVE IN THE FUTURE, INCLUDING BUT NOT LIMITED TO BREACH OF CONTRACT, QUANTUM MERUIT, CLAIMS UNDER THE DUE PROCESS AND TAKINGS CLAUSES OF THE TEXAS AND UNITED STATES CONSTITUTIONS, TORT CLAIMS, OR LICENSOR'S NEGLIGENCE.

H. Governmental Immunity. By executing this License, Licensor is not waiving its right of governmental immunity. Licensor is retaining its immunity from suit. Licensor is not granting consent to be sued by legislative resolution or action. **THERE IS NO WAIVER OF GOVERNMENTAL IMMUNITY.**

I. Third Party Beneficiary. Except as provided in Article IV.B. above with respect to Indemnitees, (i) Licensor's granting of this License does not create any third-party beneficiary, (ii) there is no third-party beneficiary to this License, and (iii) no person or entity who is not a party to this License shall have any third party beneficiary or other rights hereunder.

J. Notices. Any notice or communication required in the administration of this License shall be sent by certified mail, return receipt requested, to the parties' respective mailing addresses as set forth hereinabove.

K. Notice of Alleged Breach; Statutory Prerequisite. Without limiting the provisions of Article IV.G. above, as a condition precedent to filing suit for alleged damages incurred by an alleged breach of an express or implied provision of this License, Licensee or its legal representative, shall give the City Manager, or any other reasonable official of Licensor, notice in writing (consisting of one (1) original and seven (7) copies of notice attached to a copy of this License) of such damages, duly verified, within one hundred eighty (180) days after the same has been sustained. The discovery rule does not apply to the giving of this notice. The notice shall include when, where and how the damages occurred, the apparent extent thereof, the amount of damages sustained, the

amount for which Licensee will settle, the physical and mailing addresses of Licensee at the time and date the claim was presented and the physical and mailing addresses of Licensee for the six (6) months immediately preceding the occurrence of such damages, and the names and addresses of the witnesses upon whom Licensee relies to establish its claim; and a failure to so notify the City Manager or other such official of Licensor within the time and manner provided herein shall exonerate, excuse and except Licensor from any liability whatsoever. Licensor is under no obligation to provide notice to Licensee that Licensee's notice is insufficient. Licensor reserves the right to request reasonable additional information regarding the claim. Said additional information shall be supplied within thirty (30) days after receipt of notice.

The statutory prerequisites outlined herein constitute jurisdictional requirements pursuant to Section 271.154 of the Texas Local Government Code and Section 311.034 of the Texas Government Code. Notwithstanding any other provision, Licensee's failure to comply with the requirements herein shall perpetually bar Licensee's claim for damages under Chapter 271 of the Texas Local Government Code, and Section 311.034 of the Texas Government Code, regardless if Licensor has actual or constructive notice or knowledge of said claim or alleged damages. Licensee agrees that the requirements of this entire License are reasonable.

L. Consideration. The terms of this License are supported by good and valuable consideration, the receipt and sufficiency of which is hereby acknowledged by the parties named herein.

M. Waiver of Governmental Immunity; Chapter 271, TEX. LOC. GOV'T CODE. The parties hereto agree that this License does not constitute a "Contract" for providing goods and/or services to Licensor as discussed in Subchapter I of Chapter 271 of the Texas Local Government Code, and Licensor does not waive, to the maximum extent allowed by law, any constitutional, statutory or common law right to sovereign immunity or governmental immunity from liability or suit. Licensor expressly does not consent to be sued or be liable. To the maximum extent allowed by law, nothing in this License constitutes a waiver of Licensor's governmental immunity and the parties hereto expressly agree that this License shall not constitute, nor be interpreted as a waiver of Licensor's governmental immunity under Subchapter I of Chapter 271 of the Texas Local Government Code, nor shall it constitute nor be interpreted as a waiver of Licensor's governmental immunity for the benefit of any third-party lacking privity to this License.

This License does not obligate Licensee to use the Property to construct, repair, operate, replace, or maintain Licensor's facilities or structures described herein, rather, it merely prohibits Licensee from using the Property for any other purpose. This License restricts the use of the Property to a specific purpose but does not require the use of the Property for a specific purpose. Licensee is not providing a service to Licensor. Licensee is paying Licensor for temporary rights in real property, not for a service. Any such provision shall be deemed to be a covenant against noncomplying use, not a covenant to use. Licensee's use of the Property in compliance with a restriction shall not constitute a service, and such complying use shall not operate to waive Licensor's governmental immunity.

N. Compliance. Licensee agrees that it shall comply with Texas Government Code Section 2252.908, as amended, to the extent that this statute applies to this License. Licensee agrees that it shall comply with Texas Local Government Code Section 176.006, as amended, to the extent that this statute applies to this License.

O. Texas Historical Commission Survey. Licensee agrees that it shall comply with Chapter 191 of the Texas Natural Resources Code. By executing this License, Licensee represents that it has contacted the Texas Historical Commission (the "Commission") for the purpose of determining whether the Commission will request that an archaeological survey be completed before Licensee commences operations on the Property, as contemplated herein. Licensee agrees that it shall complete or cause to be completed an archaeological survey before commencing any operations on the Property if the Commission so requests and deliver the same to Licensor. Notwithstanding any provision contained herein, in the event that any site, object, artifact, or other feature of archaeological, scientific, educational, cultural, or historical interest is encountered during the operations authorized by this License, Licensee will immediately notify Licensor and the Commission so that adequate measures may be undertaken to protect or recover such discoveries or findings, as deemed appropriate by Licensor or the Commission.

P. Waiver. No waiver of any of the provisions of this License shall be deemed or constitute a waiver of any other provisions of this License, nor shall such waiver constitute a continuing waiver unless otherwise expressly provided. Likewise, the failure of Licensor to enforce any provision of this License shall not be deemed nor shall constitute a waiver of the right of Licensor to enforce such provision.

Q. Counterpart Execution. This License may be executed in several counterparts, and any such agreement shall be deemed an original for all intents and purposes.

R. No Release of Liability. Notwithstanding anything to the contrary contained in this License, the termination or expiration of this License shall not relieve Licensee of any liability, duty or obligation under this License, nor shall it preclude Licensor from asserting any right to specific performance, damages or any other rights or remedies to which Licensor may be entitled. Upon termination or expiration of this License for any reason, Licensee shall execute and deliver a recordable release of this License to Licensor in form and substance satisfactory to Licensor.

S. Entire Agreement. This License constitutes the entire agreement between Licensor and Licensee concerning the subject matter hereof, superseding all negotiations, prior discussions, prior licenses and prior agreements and understandings related to the subject matter hereof. This License may only be amended by written instrument executed by Licensor and Licensee.

[Signature Pages Follow]

LICENSOR:
CITY OF MIDLAND, TEXAS

By:_____
Morris Williams, Jr., Interim City Manager

ATTEST:

_____
Marcia Bentley-German, City Secretary

APPROVED AS TO CONTENT AND COMPLETENESS:

_____
Carl Craigo, Director of Utilities

APPROVED ONLY AS TO FORM:

_____
John Ohnemiller, City Attorney

LICENSEE:
ENTERPRISE NAVITAS MIDSTREAM MIDLAND BASIN LLC

By: _____
Printed Name: Cody B. Trevino
Title: Agent and Attorney-in-Fact

THE STATE OF Texas §
§
COUNTY OF Harris §

BEFORE ME, the undersigned authority, on this 20th day of June, 2023 personally appeared Cody B. Trevino an officer of Enterprise Navitas Midstream Midland Basin LLC known to me to be the person and official whose name is subscribed to the foregoing instrument and acknowledged to me that he executed the same as the act and deed of said entity, for the purposes and consideration therein expressed, and in the capacity therein stated.

GIVEN UNDER MY HAND AND SEAL OF OFFICE this the 20th day of June, 2023.

_____
Notary Public, State of Texas

SCHERI SCHMIDT
Notary Public, State of Texas
Comm. Expires 08-19-2027
Notary ID 126205042

City Council Meeting

Item Number: 13

Meeting Date: July 11, 2023

To: City Council / City Manager

From: John Simmons, Manager, Right-of-Way

Subject: Motion authorizing the execution of a Right-of-Way License (23-329-031) between the City of Midland and Targa Pipeline Mid-Continent West-Tex LLC regarding City-owned property described as Sections 29, 31, 32 and 41, Block 38, Township 1 South, T&P RR Co. Survey, Midland County, Texas (DISTRICT 2) (UTILITIES)

Purpose:

This motion will provide the third 10-year renewal of a 30' wide right of way for an existing Eight inch (8") private, poly construction, pipeline buried thirty-six (36) inches deep in the City of Midland-owned Right of Way for Todd Road. Current Right of Way License 2013-188 dated June 26, 2013, with Atlas Pipeline Mid-Continent Westtex, is paid up to date with the "as-built" pipeline survey provided.

This Right-of-Way License is proposed for a single ten (10) year period, paid in advance. Terms are consistent with the City's standard license for facilities of this nature.

Recommended City Council Action:

Approve

Fiscal Impact:

Application fee (one time): $1,000

ten-year term paid in advance

8" pipeline ($170.00 per rod x 510.91 rods) $86,854.70

Total Collected: $87,854.70

Discussion:

This is the third 10-year renewal of the ROW License recorded as Instrument number 2013-24356 in the Midland County Hall of Records.

This pipeline is a poly construction, private gas line Eight inches (8”) in diameter and buried thirty-six inches (36) deep. This motion will allow the operator to continue to operate the pipeline buried within the Todd Road Right of Way, operator may be required to relocate the pipeline when Todd Road is expanded.
Certificates of Insurance (COI) with the City of Midland named as additional insured and a waiver of subrogation in favor of the City of Midland has been collected and are on file.

City Secretary to record completed License Agreement

Morris William Jr.

City Manager’s Office

CERTIFICATE OF LIABILITY INSURANCE

DATE (MM/DD/YYYY): 03/30/2023

THIS CERTIFICATE IS ISSUED AS A MATTER OF INFORMATION ONLY AND CONFERS NO RIGHTS UPON THE CERTIFICATE HOLDER. THIS CERTIFICATE DOES NOT AFFIRMATIVELY OR NEGATIVELY AMEND, EXTEND OR ALTER THE COVERAGE AFFORDED BY THE POLICIES BELOW. THIS CERTIFICATE OF INSURANCE DOES NOT CONSTITUTE A CONTRACT BETWEEN THE ISSUING INSURER(S), AUTHORIZED REPRESENTATIVE OR PRODUCER, AND THE CERTIFICATE HOLDER.

IMPORTANT: If the certificate holder is an ADDITIONAL INSURED, the policy(ies) must have ADDITIONAL INSURED provisions or be endorsed. If SUBROGATION IS WAIVED, subject to the terms and conditions of the policy, certain policies may require an endorsement. A statement on this certificate does not confer rights to the certificate holder in lieu of such endorsement(s).

PRODUCER MARSH USA LLC. 2929 Allen Parkway, Suite 2500 Houston, TX 77019 CN101831123-WT-JV-23-24	**CONTACT NAME:** **PHONE (A/C, No, Ext):** **FAX (A/C, No):** **E-MAIL ADDRESS:**
INSURED Targa Pipeline Mid-Continent WestTex LLC 110 W. 7th Street, Suite 2300 Tulsa, OK 74119	**INSURER(S) AFFORDING COVERAGE** — **NAIC #** **INSURER A :** Arch Insurance Company — 11150 **INSURER B :** ACE American Insurance Company — 22667 **INSURER C :** **INSURER D :** **INSURER E :** **INSURER F :**

COVERAGES **CERTIFICATE NUMBER:** HOU-003723083-15 **REVISION NUMBER:** 3

THIS IS TO CERTIFY THAT THE POLICIES OF INSURANCE LISTED BELOW HAVE BEEN ISSUED TO THE INSURED NAMED ABOVE FOR THE POLICY PERIOD INDICATED. NOTWITHSTANDING ANY REQUIREMENT, TERM OR CONDITION OF ANY CONTRACT OR OTHER DOCUMENT WITH RESPECT TO WHICH THIS CERTIFICATE MAY BE ISSUED OR MAY PERTAIN, THE INSURANCE AFFORDED BY THE POLICIES DESCRIBED HEREIN IS SUBJECT TO ALL THE TERMS, EXCLUSIONS AND CONDITIONS OF SUCH POLICIES. LIMITS SHOWN MAY HAVE BEEN REDUCED BY PAID CLAIMS.

INSR LTR	TYPE OF INSURANCE	ADDL INSD	SUBR WVD	POLICY NUMBER	POLICY EFF (MM/DD/YYYY)	POLICY EXP (MM/DD/YYYY)	LIMITS	
A	X **COMMERCIAL GENERAL LIABILITY** CLAIMS-MADE X OCCUR X SIR: $500,000 GEN'L AGGREGATE LIMIT APPLIES PER: X POLICY PRO-JECT LOC OTHER:			81REG5046700	03/31/2023	03/31/2024	EACH OCCURRENCE DAMAGE TO RENTED PREMISES (Ea occurrence) MED EXP (Any one person) PERSONAL & ADV INJURY GENERAL AGGREGATE PRODUCTS - COMP/OP AGG	$ 1,000,000 $ 100,000 $ 5,000 $ 1,000,000 $ 2,000,000 $ 2,000,000
B	**AUTOMOBILE LIABILITY** X ANY AUTO OWNED AUTOS ONLY HIRED AUTOS ONLY SCHEDULED AUTOS NON-OWNED AUTOS ONLY			ISA H10753223	10/31/2022	10/31/2023	COMBINED SINGLE LIMIT (Ea accident) BODILY INJURY (Per person) BODILY INJURY (Per accident) PROPERTY DAMAGE (Per accident)	$ 1,000,000 $ $ $
A	X **UMBRELLA LIAB** X OCCUR **EXCESS LIAB** CLAIMS-MADE DED RETENTION $			81REU5046700 Excess of GL	03/31/2023	03/31/2024	EACH OCCURRENCE AGGREGATE	$ 10,000,000 $ 10,000,000
B	**WORKERS COMPENSATION AND EMPLOYERS' LIABILITY** ANYPROPRIETOR/PARTNER/EXECUTIVE OFFICER/MEMBER EXCLUDED? Y / N: N **(Mandatory in NH)** If yes, describe under DESCRIPTION OF OPERATIONS below	N / A		WLR C50722995	10/31/2022	10/31/2023	X PER STATUTE OTH-ER E.L. EACH ACCIDENT E.L. DISEASE - EA EMPLOYEE E.L. DISEASE - POLICY LIMIT	$ 1,000,000 $ 1,000,000 $ 1,000,000

DESCRIPTION OF OPERATIONS / LOCATIONS / VEHICLES (ACORD 101, Additional Remarks Schedule, may be attached if more space is required)

RE: Right of Way

The Certificate Holder is included as additional insured (except workers' compensation) where required by written contract. Waiver of subrogation is applicable where required by written contract.

CERTIFICATE HOLDER

City of Midland, Texas
Attn: Robert Patrick, Asst. City Manager
P.O. Box 1152
Midland, TX 79702

CANCELLATION

SHOULD ANY OF THE ABOVE DESCRIBED POLICIES BE CANCELLED BEFORE THE EXPIRATION DATE THEREOF, NOTICE WILL BE DELIVERED IN ACCORDANCE WITH THE POLICY PROVISIONS.

AUTHORIZED REPRESENTATIVE

Marsh USA LLC

© 1988-2016 ACORD CORPORATION. All rights reserved.

THE FACE OF THIS DOCUMENT HAS A MULTIPLE COLORED BACKGROUND

TARGA RESOURCES, LLC
811 LOUISIANA STREET, SUITE 2100
HOUSTON, TX 77002

JPMorgan Chase Bank, N.A.
CHICAGO, IL
2-1/710

0032733

DATE: June 20, 2023

AMOUNT: $86,854.70

PAY Eighty-Six Thousand Eight Hundred Fifty-Four Dollars & 70/100********** DOLLARS

Security Features Included. Details On Back

TO THE ORDER OF
City of Midland
P.O. Box 1152
Midland, TX 79702

SIGNATURE

JUSTIN WENGER
PRINTED NAME

⑈0032733⑈ ⑆071000013⑆ 632558805⑈

TAXPAYER ID/SSN NO. 0032733

IN FULL FOR Consideration for the renewal of a pipeline easement and all damages associated with said easement located in Sections 29, 31, 32, and 41 Block 37, T-1-S, T&P RR Co. Survey, Midland County, Texas.

Total rods 499.75 = $86,854.70

COM License 2013-188 renewal / 23-329-031

Targa Resources, LLC

DEPT APPROVAL _____ DATE: _____

TARGA RESOURCES, LLC.

GL COMPANY 35041 GL ACCOUNT 552004 RC 535502 LOC 20001

PROJECT NO _____ TASK 1004 - Land-ROW/Easement

PROJECT NAME COM renewal 2013-188 / 23-329-031

PACKET 13.4 July 11, 2023

ENTERED THE ONE NET June 20, 2023 DATE

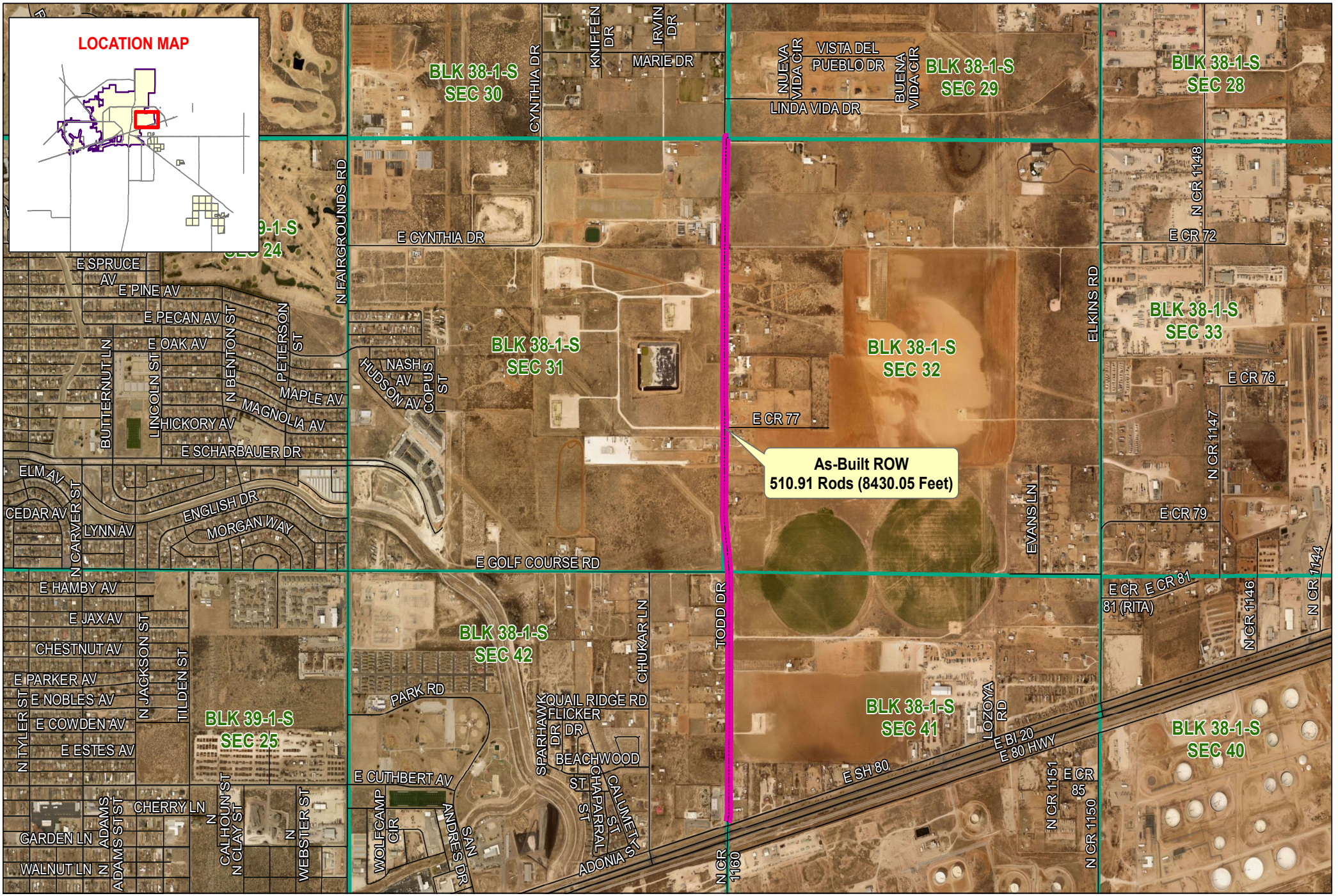

Date: 4/28/2023

As-Built ROW
Street
Survey Section

PACKET

13.5

Targa As-Built ROW on Todd Drive

July 11, 2023

0 500 1,000 Feet

©THE CITY OF MIDLAND - 2023
THIS DATA IS NOT A SUBSTITUTION FOR A SURVEY PRODUCT, NOR IS IT DESIGNED TO BE USED AS A PRIMARY TOOL IN PERMITTING OR OTHER DECISIONS BASED SOLELY ON THE INFORMATION CONTAINED HEREIN.
THE CITY OF MIDLAND SHALL NOT BE RESPONSIBLE FOR ANY DECISIONS BASED UPON THE USE OF THIS DATA.

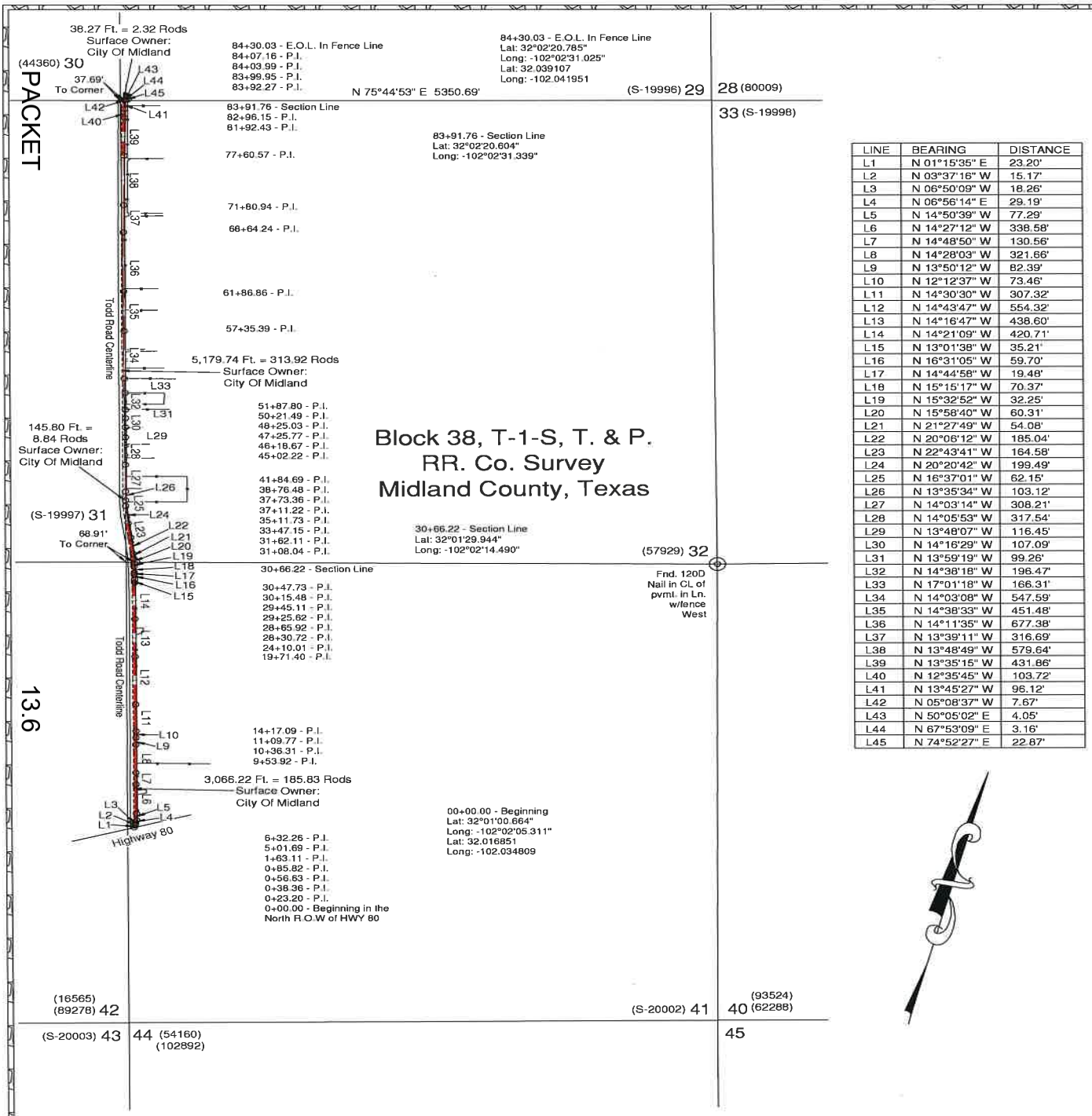

LINE	BEARING	DISTANCE
L1	N 01°15'35" E	23.20'
L2	N 03°37'16" W	15.17'
L3	N 06°50'09" W	18.26'
L4	N 06°56'14" E	29.19'
L5	N 14°50'39" W	77.29'
L6	N 14°27'12" W	338.58'
L7	N 14°48'50" W	130.56'
L8	N 14°28'03" W	321.66'
L9	N 13°50'12" W	82.39'
L10	N 12°12'37" W	73.46'
L11	N 14°30'30" W	307.32'
L12	N 14°43'47" W	554.32'
L13	N 14°16'47" W	438.60'
L14	N 14°21'09" W	420.71'
L15	N 13°01'38" W	35.21'
L16	N 16°31'05" W	59.70'
L17	N 14°44'58" W	19.48'
L18	N 15°15'17" W	70.37'
L19	N 15°32'52" W	32.25'
L20	N 15°58'40" W	60.31'
L21	N 21°27'49" W	54.08'
L22	N 20°06'12" W	185.04'
L23	N 22°43'41" W	164.58'
L24	N 20°20'42" W	199.49'
L25	N 16°37'01" W	62.15'
L26	N 13°35'34" W	103.12'
L27	N 14°03'14" W	308.21'
L28	N 14°05'53" W	317.54'
L29	N 13°48'07" W	116.45'
L30	N 14°16'29" W	107.09'
L31	N 13°59'19" W	99.26'
L32	N 14°38'18" W	196.47'
L33	N 17°01'18" W	166.31'
L34	N 14°03'08" W	547.59'
L35	N 14°38'33" W	451.48'
L36	N 14°11'35" W	677.38'
L37	N 13°39'11" W	316.69'
L38	N 13°48'49" W	579.64'
L39	N 13°35'15" W	431.86'
L40	N 12°35'45" W	103.72'
L41	N 13°45'27" W	96.12'
L42	N 05°08'37" W	7.67'
L43	N 50°05'02" E	4.05'
L44	N 67°53'09" E	3.16'
L45	N 74°52'27" E	22.87'

PACKET

13.6

Note: Survey Reconstruction filed in the Office of Pennell & Marlowe Land Surveyors, Inc.
Note: Latitudes and Longitudes shown are on NAD'83 Datum.
Note: Bearings and distances are based on The Texas Coordinate System of 1927, Central Zone.
Note: A combined grid factor of 0.9998826 must be divided into all distances to obtain surface distances.
Note: Example: (S-99999) indicates General Land Office file number.
Note: Surface ownership provided by Targa Pipeline Mid-Continent Westtex LLC.

GRAPHIC SCALE
1000 0 500 1000 2000
1" = 1000' "U.S. FEET"

Revised: 04/26/2023-BCL
USGS Quadrangle Sheet: Northeast Midland , Texas

PENNELL & MARLOWE
RESIDENTIAL, OILFIELD & LAND SURVEYORS, INC.
ALL TYPES OF SURVEYS

STATE OF TEXAS
REGISTERED
STEPHEN P. MARLOWE
5715
PROFESSIONAL LAND SURVEYOR

Stephen P. Marlowe
REGISTERED PROFESSIONAL LAND SURVEYOR NO. 5715

P.O. Box 51887, Midland, Texas 79710 (432) 262-0901 Fax (432) 262-0679 Firm #100201-00

July 11, 2023

April 23, 2023
230423JR-BCL

Existing Pipeline Survey Plat

TARGA PIPELINE
MID-CONTINENT WESTTEX LLC
Todd Road Boundary
P.O. TAR183729
Existing Pipeline Survey
In and Through
Sections 29, 32, & 41, Block 38, T-1-S
T. & P. RR. Co. Survey
Midland County, Texas

Scale: 1" = 1000'

RIGHT OF WAY LICENSE

THE STATE OF TEXAS	§	
	§	KNOW ALL MEN BY THESE PRESENTS:
COUNTY OF MIDLAND	§	

Date:	July 12, 2023
Licensor:	CITY OF MIDLAND, TEXAS, a home-rule municipal corporation
Licensor's Representative:	Morris Williams, Jr., Interim City Manager
Licensor's Mailing Address:	P.O. Box 1152 Midland, Texas 79702
Licensee:	**Targa Pipeline Mid-Continent WestTex LLC**
Licensee's Representative:	**Norman L. Winter**
Licensee's Mailing Address:	811 Louisiana St., Suite 2100 Houston, Texas 77002
Property:	As described in Article III below
License Number:	**23-329-031**

Licensee desires use of certain Property (as defined below) owned by Licensor in Midland County, Texas, for purposes set forth below. Licensee acknowledges and agrees that it must obtain a license (the "License") in order to use the public lands of Licensor.

W I T N E S S E T H:

For and in consideration of the execution of this license (this "License") and the mutual promises and covenants of the parties hereto, it is mutually promised, understood and agreed as follows:

I. Term

A. Term. This License shall be for a term of ten (10) years commencing on the date of this License (the "Commencement Date") unless terminated earlier as provided hereafter.

B. Termination. Licensor may terminate this License if Licensee fails to pay, when due, any amount owing under this License and that failure continues for sixty (60) days or, if Licensee commits any material breach or material default in performance of any obligation, prohibition, restriction, provision or covenant contained in this License, and the breach or default continues for a period of thirty (30) days after Licensor delivers notice to Licensee reasonably detailing the breach or default.

Additionally, Licensor may terminate this License at will for any or no reason upon giving at least three hundred sixty-five (365) days' written notice to Licensee. The parties to this License understand and agree that it is in Licensor's sole discretion to terminate this License during the term of this License without penalty to Licensor. Licensee has no expectation and has received no guarantees that this License will not be terminated before the end of the License term. The parties have bargained for the flexibility of terminating this License upon tender of the requisite notice at any time during the term of this License. All work and services under this License shall be suspended upon termination of this License.

Upon expiration or termination of this License, Licensee shall remove all equipment and structures associated with the undertakings contemplated by this License. After removal of all equipment and structures associated with the undertakings contemplated by this License, the surface of the Property shall be restored at the expense of Licensee to its original condition, as close thereto as may be practical, subject to the approval of Licensor upon inspection by Licensor's Representative, which approval shall not be unreasonably withheld. All of said work shall be completed within one hundred eighty (180) days after the expiration or termination of this License. All of the terms, provisions and requirements of this paragraph shall survive the expiration or termination of this License.

II. Financial Consideration

A. License Fee. A license fee in the amount of EIGHTY-SIX THOUSAND EIGHT HUNDRED FIFTY-FOUR and 70/100 Dollars ($86,854.70) ("License Fee") shall be due and payable on or prior to the Commencement Date.

In the event Licensor terminates this License pursuant to the provisions of Section I.B., Licensor agrees to refund to Licensee a pro rata share of the License Fee actually paid by Licensee to Licensor for that portion of the remaining term that is being terminated. For the avoidance of doubt, the amount of any refund payable to Licensee pursuant to this paragraph shall be determined net of any costs or expenses incurred by Licensor in connection with Licensee's unfulfilled obligations under this License (if any).

B. Application Fee. On or prior to the Commencement Date of this License, Licensee shall pay a non-refundable one-time fee of One Thousand and No/100 Dollars ($1,000.00) to Licensor's Representative. Said fee shall revert to Licensor and Licensee shall have no claim to said fee. The fee shall be used to process the application for this License.

C. Delivery of Payment. Payment of the above fees shall be made to Licensor at the office of Licensor's Representative, Attn: Right of Way Manager, P.O. Box 1152, Midland, Texas, 79702. Payment of the above fees shall be exclusive of and in addition to all general municipal taxes of whatever nature, including but not limited to ad valorem taxes and special taxes and assessments for public improvements.

D. Late Payment. Licensee's failure to make payment of any of the above fees within thirty (30) days after such fee is due shall constitute a late payment and Licensee shall pay Licensor a late charge of five percent (5%) of such fee.

III. Use

A. Permitted Use. Licensor does hereby grant unto Licensee, the right to enter upon the Property, being thirty (30) feet in width of the pipeline location as shown on **Exhibit A** attached hereto and incorporated herein for the purpose of operating, repairing, maintaining, replacing and removing, thereon, along the herein described pipeline locations, a poly construction pipeline, not to exceed eight (8) inches in diameter, for the transportation of natural gas and to have the right of ingress and egress at convenient points for such purpose. **Licensee shall provide Licensor with a complete as-built survey within sixty (60) days of completion of the pipeline(s) and facilities described herein. The parties agree Licensee's failure to provide Licensor with a complete as-built survey within sixty (60) days of completion of the pipeline(s) and facilities described herein may result in the termination of this License. The decision to accept a complete as-built survey after the sixty-day deadline prescribed herein, or, conversely, to terminate this License shall be in the sole and absolute discretion of Licensor.**

B. Road Repair. Licensee covenants and agrees that it will repair, at its own expense, any of Licensor's roads that Licensee, its employees, contractors, representatives, agents or assigns damage on Licensor's property, so that such roads will comply with Licensor's standard specifications.

C. Utility Repair. Licensee covenants and agrees that Licensee shall, at its own expense, repair all water lines, sewer lines, service lines, water meters and other utility lines owned by Licensor that Licensee, its employees, contractors, representatives, agents or assigns, damage so that such water lines, sewer lines, water meters and other utility lines shall comply with Licensor's standard specifications.

D. Pipeline Depth. Licensee covenants and agrees that it will bury the pipeline to be constructed hereunder no less than forty-eight (48) inches in depth. All backfill used in burying such pipeline shall be compacted to a density of ninety percent (90%), except where such pipeline crosses under a paved or traveled portion of any City of Midland right of way where such backfill shall be compacted to a density of ninety-five percent (95%). Licensor shall be afforded the opportunity to test the density on all backfill. Notwithstanding any provision to the contrary contained herein, Licensee covenants and agrees that, at any point that Licensee's pipeline intersects with a City of Midland utility line location, the pipeline shall be bored at a depth of at least (i) nine (9) feet under all City of Midland water utility lines and (ii) two (2) feet under all City of Midland sewer utility lines. Licensee agrees that it shall comply with 30 Tex. Admin. Code § 290.44(e), as amended, to the extent applicable to this License.

E. Approval of Bids. Before Licensee seeks bids on any phase of the repair of public streets, alleys, water lines, sewer lines or any other public utilities, Licensee shall first obtain written approval of the specifications therefor from Licensor's Representative, which approval shall be at Licensor's Representative's sole discretion.

F. Reservation of Rights. Licensor expressly reserves the right to install, repair, or reconstruct streets or roads and all ancillary public uses usual and customary in connection with streets and roads, expressly including but not limited to drainage facilities and related structures in the rights of way used and occupied by Licensee.

Licensor reserves the right to lay and permit to be laid, sewer, gas, water, and other pipelines or cables and conduits, and to do and permit to be done, any underground or overhead installation or improvement that may be deemed necessary or proper by the governing body of Licensor, in, on, across, along, over, under, and through any property occupied by Licensee. In permitting such work to be done, Licensor shall not be liable to Licensee for any damage so caused to Licensee's system or property, **NOR SHALL LICENSOR BE LIABLE TO LICENSEE FOR ANY DAMAGES TO LICENSEE'S PIPELINE ARISING OUT OF THE NEGLIGENCE BY LICENSOR, ITS EMPLOYEES, OFFICERS OR AGENTS, OR LICENSOR'S CONTRACTORS OR SUBCONTRACTORS**. If Licensor requires Licensee to remove, alter, change, adapt, or conform Licensee's facilities because of changes in the grade or construction of a street or in the location or manner of constructing a water pipe, sewer pipe, or other surface, underground or aboveground structure owned by Licensor, Licensee shall make the alterations or changes as soon as practicable, and in no event longer than one hundred eighty (180) days, when ordered in writing by Licensor, without claim for reimbursement for the cost of the relocation or for damages against Licensor. If these requirements impose a financial hardship upon Licensee, Licensee shall have the right to present alternative proposals for Licensor's consideration.

G. Non-exclusive. Licensor expressly reserves the full right to grant other easements or rights of way crossing or running parallel with the rights of way used by Licensee.

H. Abandonment. It is especially provided, however, that as an express condition of this License, and not as a mere covenant, in the event Licensee abandons any equipment or appurtenances associated with the undertakings contemplated by this License, or the Property ceases to be used for the purposes enumerated herein for any period of twelve (12) consecutive months, or longer, other than the time elapsing between the date hereof and construction, and upon giving Licensee one hundred and twenty (120) days' written notice, then and in that event, this License shall automatically terminate and revert to Licensor, its successors or assigns, free and clear of any right, title, or interest of Licensee.

I. Approval of Specifications. In the event Licensee desires to reconstruct, repair, alter, replace or remove any pipeline built hereunder, Licensee shall submit the plans and specifications that pertain to the rebuilding or repairs of Licensor's streets and roads and the rebuilding or repairs of any of Licensor's public utilities to Licensor's Representative for his or her prior written approval, which approval shall be at Licensor's Representative's sole discretion. In the event of emergency repairs necessary to restore service, Licensee shall notify Licensor's Representative before making any repairs if during a Licensor workday. If not on a workday, Licensee shall notify Licensor's Representative on the first workday after repairs have begun.

J. Gates and Fences. Without altering or expanding the limitations on ingress, egress and access to the Property set forth in Paragraph A. of Article III above, Licensee agrees to use existing gates and roadways where available, to enter, leave and cross the Property; provided that Licensee shall not use any road marked "Closed". Licensee and all persons entering or leaving the Property in connection with Licensee's operations hereunder shall keep all outside and interior gates securely closed except during operations related to this License. Licensee shall keep all outside gates, and all other gates designated by Licensor, securely locked except during operations related to this License. At any gate that is to be locked, Licensor may install its own lock in addition to Licensee's lock.

Licensee agrees that Licensee shall not cut or go over any fence at any time or in connection with any operations on the Property without first obtaining Licensor's express prior consent thereto in writing. All gates or openings in fences shall be at mutually agreeable location(s) between Licensee and Licensor and shall be constructed as reasonably required by Licensor. Upon the termination of this License, at Licensor's election, gates in fences shall be left in place and shall thereafter be owned by Licensor or Licensee shall remove such gates and restore the fence to its original condition as nearly as reasonably practicable. The terms, provisions and requirements of this provision shall survive the termination or expiration of this License.

K. Trash. Licensee shall keep the Property free of trash and debris at all times. Under no circumstances, will Licensee be allowed to bury any trash, debris or foreign material of any kind on or under the Property. Licensor shall have the right to expel and permanently ban from the Property any person observed disposing of trash on the Property. Upon the completion of any operations, all ribbons, flags, stakes and similar items shall by promptly removed from the Property.

L. Hunting, Fishing and Alcohol Prohibited. No agent, employee, representative, contractor or subcontractor of Licensee or any other person allowed to enter the Property by Licensee shall be permitted to hunt, fish, trap, camp, picnic, ride motorcycles or four-wheelers or otherwise conduct any social gathering on the Property, nor shall any such persons be permitted to bring firearms, archery equipment, dogs, alcoholic beverages or illegal drugs on the Property at any time. Violations of this provision shall cause the violator to be regarded as a trespasser and subject to prosecution under trespass laws of the State of Texas. Licensor shall have the right to expel and permanently ban from the Property any person observed on the Property in violation of this provision.

M. Storage of Machinery and Equipment. Licensee shall use no part of the Property to store machinery, equipment, or other property of Licensee while it is not being used.

N. Additional Reservations. Licensor reserves the right to use the surface, subsurface or airspace on, below or above the land covered by this License for any purpose allowed by law and deemed necessary or proper by Licensor and to do and permit to be done, any work in connection therewith which may be deemed necessary or proper by Licensor in, on, across, along, over, under, and through any portion of the Property. **In the event of such work in connection with said purposes it shall be deemed necessary or proper by Licensor, at Licensor's sole discretion, to alter, change, or relocate any pipeline, property, or casing of Licensee, such alteration or change or relocation shall be commenced and completed by Licensee within one hundred eighty (180) days after being ordered in writing by Licensor pursuant to directions from Licensor without any claim for reimbursement for the cost of the alteration, change or relocation or damages against Licensor. Licensee acknowledges the potential need for relocation, change or alteration of any of Licensee's pipeline, property or casing due to road expansion and that the relocation, change, or alteration shall be at the sole cost of Licensee**. Provided, however, that Licensee shall at all times be entitled to receive from appropriate governmental bodies, excluding Licensor, payment for alteration, change or relocation of its system to which it may be lawfully entitled to under applicable federal or state laws with respect to relocation payments. Without limiting the foregoing, Licensor expressly reserves the full right to grant other licenses, easements and/or rights-of-way in, on, across, along, over, under or through all or any portion of the Property. Licensor expressly reserves the right to use and grant to third parties the right to use

all or any portion of the Property and the surface, subsurface or airspace on, below or above the Property for any purpose.

IV. Standard General Conditions

A. Insurance. Licensee shall at all times during the term of this License maintain and keep in full force and effect insurance in the following types and minimum amounts with companies authorized to do business in the State of Texas:

Commercial General Liability (including Contractual liability):	
■ Personal Injury:	$1,000,000.00 per person $1,000,000.00 per occurrence
■ Property Damage:	$100,000.00 per occurrence
Business Automobile Liability:	$1,000,000.00 combined single limit-- Personal Injury and Property Damage
Workers' Compensation:	Statutory limits
Employers' Liability:	$1,000,000.00 per accident or occurrence
Umbrella Liability:	$10,000,000.00 each occurrence $10,000,000.00 aggregate

The Commercial General Liability shall be on an occurrence basis. This insurance shall name Licensor as an additional insured and all insurance shall waive subrogation in favor of Licensor.

The Workers' Compensation coverage provided by Licensee shall inure to the benefit of employees injured during the course and scope of their employment by Licensee pursuant to this License. The Workers' Compensation insurance shall waive all rights of subrogation against Licensor.

The Business Automobile Liability insurance provided by Licensee shall cover any auto for bodily injury and property damage, including owned vehicles, hired and non-owner vehicles, and employee non-ownership, and the amount of such policy shall be a minimum of $1,000,000.00 covering any vehicle used for the execution of the work that is the subject of this License. This insurance shall name Licensor as an additional insured and all insurance shall waive subrogation in favor of Licensor.

All insurance required pursuant to this License, except for Worker's Compensation Insurance, shall name Licensor as an additional insured. All insurance required pursuant to this License, including Worker's Compensation Insurance, shall provide for a waiver of subrogation as to Licensor. The parties agree that, prior to the execution of this License, Licensee shall provide one or more certificates of insurance showing that the requirements of this article have been met. Licensor shall determine, in its sole discretion, whether such requirements have been satisfied.

Licensor shall be provided written notice by Licensee's insurance provider not later than thirty (30) days prior to any reduction or termination of such coverage. Licensor shall not be required to

provide any insurance whatsoever pursuant to this License.

Licensee shall contractually require all contractors, subcontractors, and sub-subcontractors that work on any portion of the work that is the subject of this License to obtain insurance coverage that meets or exceeds the policy requirements and minimum amounts as required herein and name the City of Midland as an additional insured (except as to Worker's Compensation Insurance). Licensee certifies that the one or more certificates of insurance provided as required herein complies with the requirements of Chapter 1811 of the Texas Insurance Code. Licensee shall not use an unapproved certificate of insurance or insert inappropriate language on a certificate. Compliance with state law is the sole responsibility of Licensee.

B. Indemnity. TO THE FULLEST EXTENT PERMITTED BY APPLICABLE LAW, LICENSEE, ITS SUCCESSORS AND ASSIGNS, AGREE TO INDEMNIFY, PROTECT, DEFEND AND HOLD HARMLESS LICENSOR AND LICENSOR'S REPRESENTATIVES, AGENTS, ATTORNEYS, EMPLOYEES, SUCCESSORS AND ASSIGNS (COLLECTIVELY, "INDEMNITEES") FOR, FROM AND AGAINST ANY AND ALL CLAIMS, LOSSES, DAMAGES, LIABILITIES, LIENS, FINES, PENALTIES, CAUSES OF ACTION, SUITS, CHARGES, JUDGMENTS, ADMINISTRATIVE ORDERS, REMEDIATION REQUIREMENTS, ENFORCEMENT ACTIONS OF ANY KIND, PERSONAL INJURIES, PROPERTY DAMAGE, AND ALL COSTS AND EXPENSES INCURRED IN CONNECTION THEREWITH (INCLUDING, BUT NOT LIMITED TO, ATTORNEYS' FEES AND EXPENSES, INCLUDING, WITHOUT LIMITATION, ALL ATTORNEYS' FEES AND EXPENSES INCURRED IN ENFORCING THIS INDEMNITY) OF ANY NATURE, KIND OR DESCRIPTION OF ANY PERSON OR ENTITY, DIRECTLY OR INDIRECTLY ARISING OUT OF, CAUSED BY OR RESULTING FROM (IN WHOLE OR IN PART) THIS LICENSE, LICENSEE'S USE OF OR ACTIVITIES ON THE PROPERTY OR ANY OTHER PROPERTY OWNED BY LICENSOR, OR ANY ACT OR OMISSION OF LICENSEE, ANY CONTRACTOR, SUBCONTRACTOR, ANYONE DIRECTLY OR INDIRECTLY EMPLOYED BY THEM, OR ANYONE THAT THEY CONTROL OR EXERCISE CONTROL OVER (COLLECTIVELY, "LIABILITIES"), EVEN IF SUCH LIABILITIES ARISE FROM OR ARE ATTRIBUTED, IN WHOLE OR IN PART, TO THE NEGLIGENCE OF ANY INDEMNITEE. LICENSEE SHALL PROMPTLY ADVISE LICENSOR OF ANY ACTION, ADMINISTRATIVE OR LEGAL PROCEEDING OR INVESTIGATION TO WHICH THIS INDEMNIFICATION MAY APPLY, AND OF WHICH LICENSEE HAS RECEIVED NOTICE, AND LICENSEE, AT LICENSEE'S EXPENSE, SHALL ASSUME ON BEHALF OF LICENSOR (AND THE OTHER INDEMNITEES) AND CONDUCT WITH DUE DILIGENCE AND IN GOOD FAITH THE DEFENSE THEREOF WITH COUNSEL REASONABLY SATISFACTORY TO LICENSOR; PROVIDED, HOWEVER, THAT ANY INDEMNITEE SHALL HAVE THE RIGHT, AT ITS OPTION, TO BE REPRESENTED THEREIN BY COUNSEL OF ITS OWN SELECTION AND AT ITS OWN EXPENSE. IN THE EVENT OF FAILURE BY LICENSEE TO ASSUME THE DEFENSE OF LICENSOR IN ACCORDANCE WITH THIS INDEMNIFICATION, LICENSOR, AT ITS OPTION, AND WITHOUT RELIEVING LICENSEE OF ITS OBLIGATION HEREUNDER, MAY ASSUME SUCH DEFENSE, AFTER WRITTEN NOTICE THEREOF TO LICENSEE AND LICENSEE'S FAILURE TO RESPOND THERETO WITHIN TEN (10) BUSINESS DAYS AFTER RECEIPT OF SUCH NOTICE (SAID TEN (10) DAY PERIOD SHALL NOT APPLY IN

ANY CASE WHERE IMMEDIATE ANSWERS, RESPONSES, OR OTHER AFFIRMATIVE ACTION IS REQUIRED TO PRESERVE THE RIGHTS OF LICENSOR) BUT ALL REASONABLE COSTS AND EXPENSES SO INCURRED BY LICENSOR IN THAT EVENT SHALL BE REIMBURSED BY LICENSEE TO LICENSOR, TOGETHER WITH INTEREST ON THE SAME FROM THE DATE ANY SUCH EXPENSE WAS PAID BY LICENSOR UNTIL REIMBURSED BY LICENSEE, AT THE RATE OF INTEREST PROVIDED TO BE PAID ON JUDGMENTS, BY THE LAWS OF THE STATE OF TEXAS.

WITHOUT LIMITING THE FOREGOING, LICENSEE AGREES THAT LICENSEE SHALL INDEMNIFY, PROTECT, DEFEND AND SAVE LICENSOR HARMLESS FROM ANY AND ALL CLAIMS, LIENS, JUDGMENTS, SUITS, CAUSES OF ACTION, AND DEMANDS OF ANY SUBCONTRACTORS, LABORERS, WORKMEN, MECHANICS, MATERIALMEN, OR FURNISHERS OF MACHINERY AND PARTS THEREOF, EQUIPMENT, POWER TOOLS, OR SUPPLIES, IN CONNECTION WITH THE CONSTRUCTION, OPERATION, REPAIR, MAINTENANCE, REPLACEMENT OR REMOVAL OF THE PIPELINE OR OTHER PERMITTED FACILITIES DESCRIBED HEREIN.

WITHOUT LIMITING ANY OF THE FOREGOING, LICENSEE SHALL INDEMNIFY, PROTECT AND HOLD HARMLESS AND DEFEND EACH INDEMNITEE FROM ALL LIABILITIES, SUITS, ACTIONS, CLAIMS, DAMAGES, CAUSES OF ACTION, CHARGES, JUDGMENTS, PERSONAL INJURIES, ACCIDENTAL DEATH, PROPERTY DAMAGE, LOSSES AND EXPENSES OF ANY CHARACTER WHATSOEVER, INCLUDING, WITHOUT LIMITATION, ATTORNEY'S FEES, BROUGHT FOR OR ON ACCOUNT OF ANY INJURIES OR DAMAGES RECEIVED OR SUSTAINED BY ANY PERSON OR PERSONS OR PROPERTY ON ACCOUNT OF ANY NEGLIGENT ACT OF ANY INDEMNITEE, WHETHER SUCH NEGLIGENT ACT WAS THE SOLE PROXIMATE CAUSE OF THE INJURY OR DAMAGE OR A PROXIMATE CAUSE JOINTLY AND CONCURRENTLY WITH LICENSEE OR LICENSEE'S EMPLOYEES', REPRESENTATIVES', AGENTS', CONTRACTORS' OR SUBCONTRACTORS' NEGLIGENCE, IN THE EXECUTION, SUPERVISION AND OPERATIONS GROWING OUT OF OR IN ANY WAY CONNECTED WITH THE PERFORMANCE OF THIS LICENSE, INCLUDING, WITHOUT LIMITATION, SUCH NEGLIGENT ACTS ARISING FROM OR IN ANY WAY CONNECTED WITH THE PLACEMENT, CONSTRUCTION, OPERATION, REPAIR, MAINTENANCE, REPLACEMENT OR REMOVAL OF ANY PART OF LICENSEE'S PIPELINE OR PERMITTED FACILITIES ON LICENSOR'S PROPERTY. LICENSEE WILL BE REQUIRED TO PAY ANY JUDGMENT WITH COSTS WHICH MAY BE OBTAINED AGAINST LICENSOR OR ANY INDEMNITEE, INCLUDING RELATED ATTORNEY'S FEES.

WITHOUT LIMITING ANY OF THE FOREGOING, LICENSEE, ITS SUCCESSORS AND ASSIGNS, SHALL INDEMNIFY, PROTECT, DEFEND AND HOLD INDEMNITEES HARMLESS FROM AND AGAINST ALL CLAIMS, LOSSES, DAMAGES, LIABILITIES, LIENS, FINES, PENALTIES, CAUSES OF ACTION, SUITS, CHARGES, JUDGMENTS, ADMINISTRATIVE ORDERS, REMEDIATION REQUIREMENTS, ENFORCEMENT ACTIONS OF ANY KIND, PERSONAL

INJURIES, PROPERTY DAMAGE, AND ALL COSTS AND EXPENSES INCURRED IN CONNECTION THEREWITH (INCLUDING, BUT NOT LIMITED TO, ATTORNEYS' FEES AND EXPENSES, INCLUDING, WITHOUT LIMITATION, ALL ATTORNEYS' FEES AND EXPENSES INCURRED IN ENFORCING THIS INDEMNITY) OF ANY NATURE, KIND OR DESCRIPTION OF ANY PERSON OR ENTITY, DIRECTLY OR INDIRECTLY ARISING OUT OF, CAUSED BY OR RESULTING FROM (IN WHOLE OR IN PART) (i) FAILURE OF LICENSEE, ANY CONTRACTOR, SUBCONTRACTOR, ANYONE DIRECTLY OR INDIRECTLY EMPLOYED BY THEM, OR ANYONE THAT THEY CONTROL OR EXERCISE CONTROL OVER (COLLECTIVELY, THE "INDEMNIFYING PARTIES"), TO COMPLY WITH ALL APPLICABLE LOCAL, FEDERAL AND/OR STATE ENVIRONMENTAL LAWS, INCLUDING BUT NOT LIMITED TO THE RESOURCE CONSERVATION AND RECOVERY ACT (RCRA) AND THE COMPREHENSIVE ENVIRONMENTAL RESPONSE, COMPENSATION, AND LIABILITY ACT (CERCLA) (AS THEY MAY BE REAUTHORIZED AND/OR AMENDED) AND ALL OTHER LOCAL, FEDERAL AND STATE LAWS, IN CONNECTION WITH OR RELATED TO ANY INDEMNIFYING PARTY'S OPERATIONS OR ACTIVITIES ON THE PROPERTY, OR (ii) ANY INDEMNIFYING PARTY'S HANDLING, STORING, RELEASING OR TRANSPORTING OR DISPOSING OF ALL SUBSTANCES, INCLUDING BUT NOT LIMITED TO HAZARDOUS SUBSTANCES AND HAZARDOUS WASTES, ON OR FROM THE PROPERTY OR ANY OTHER LANDS OF LICENSOR.

IT IS THE INTENTION OF THE PARTIES HERETO THAT THE PROVISIONS OF THIS INDEMNIFICATION SHALL APPLY TO AND PROTECT EACH INDEMNITEE FROM THE CONSEQUENCES OF STRICT LIABILITY IMPOSED OR THREATENED TO BE IMPOSED ON SUCH INDEMNITEE, AS WELL AS FROM THE CONSEQUENCES OF THE NEGLIGENCE OF ANY INDEMNITEE, WHETHER OR NOT THAT NEGLIGENCE IS A CONTRIBUTING OR CONCURRING CAUSE OF ANY LIABILITY INDEMNIFIED AGAINST IN THIS ARTICLE IV.B.

THE TERMS, PROVISIONS, REQUIREMENTS AND OBLIGATIONS OF THIS ARTICLE IV.B. SHALL SURVIVE TERMINATION OR EXPIRATION OF THIS LICENSE, AND SHALL NOT BE LIMITED BY OR TO DAMAGES, COMPENSATION OR BENEFITS PAYABLE UNDER INSURANCE POLICIES, WORKER'S COMPENSATION ACTS, DISABILITY BENEFIT ACTS OR OTHER EMPLOYEES' BENEFIT ACTS.

C. Assignment. The provisions of this License shall inure to the benefit of and be binding upon Licensor and Licensee and their respective successors and permitted assigns. The rights and privileges granted by Licensor under this License inure to the benefit of Licensee. No rights, privileges or obligations hereunder shall be assignable by Licensee without the express prior written consent of Licensor. Any required consent is to be evidenced by a letter written by Licensor's City Manager that fully recites the terms and conditions, if any, upon which consent is given. The granting of consent is in the sole discretion of Licensor's City Manager

D. Independent Contractor. It is expressly understood and agreed that Licensee shall perform all work described herein as an independent contractor and not as an officer, agent, servant or employee of Licensor; that Licensee shall have exclusive control of and the exclusive right to

control the details of the work performed hereunder, and all persons performing the same; and shall be solely responsible for the acts and omissions of its officers, agents, employees, contractors and subcontractors; that the doctrine of respondeat superior shall not apply as between Licensor and Licensee, its officers, agents, employees, contractors and subcontractors; and that nothing herein shall be construed as creating a partnership or joint enterprise between Licensor and Licensee. No person performing any of the work described hereunder shall be considered an officer, agent, servant or employee of Licensor. Further, it is specifically understood and agreed that nothing in this License is intended or shall be construed as creating a "Community of Pecuniary Interest" or "An Equal Right of Control" which would give rise to vicarious liability. Licensee shall be an independent contractor under this License and shall assume all of the rights, obligations and liabilities applicable to it as such independent contractor hereunder. Licensor does not have the power to direct the order in which the work is done. Licensor shall not have the right to control the means, methods or details of Licensee's work. Licensee shall assume exclusive responsibility for the work. Licensee is entirely free to do the work in its own way. The provisions of this subparagraph (D.) shall not be deemed or construed as contradicting, limiting or conflicting with the provisions of subparagraph (M.) below.

E. Attorney Fees. SHOULD LICENSOR BE REQUIRED TO RESORT TO EMPLOYMENT OF ATTORNEYS TO ENFORCE THIS LICENSE, OR ANY OF ITS RIGHTS UNDER THIS LICENSE, LICENSOR SHALL BE ENTITLED TO REIMBURSEMENT FROM LICENSEE FOR LICENSOR'S ATTORNEYS' FEES. LICENSEE SHALL REIMBURSE LICENSOR FOR LICENSOR'S ATTORNEYS' FEES INCURRED IN CONNECTION WITH THE PREPARATION AND NEGOTIATION OF THIS LICENSE. BY EXECUTING THIS LICENSE, LICENSEE AGREES TO WAIVE, AND DOES HEREBY KNOWINGLY, CONCLUSIVELY, VOLUNTARILY AND INTENTIONALLY WAIVE, ANY CLAIM IT HAS OR MAY HAVE IN THE FUTURE AGAINST LICENSOR REGARDING THE AWARD OF ATTORNEY'S FEES, WHICH ARE IN ANY WAY RELATED TO THIS LICENSE, OR THE CONSTRUCTION, INTERPRETATION, VALIDITY OR BREACH OF THIS LICENSE. WITHOUT LIMITING THE FOREGOING, LICENSEE SPECIFICALLY AGREES THAT IF LICENSEE BRINGS OR COMMENCES ANY LEGAL ACTION OR PROCEEDING RELATED TO THIS LICENSE, OR TO THE CONSTRUCTION, INTERPRETATION, VALIDITY OR BREACH OF THIS LICENSE, INCLUDING BUT NOT LIMITED TO ANY ACTION PURSUANT TO THE PROVISIONS OF THE TEXAS UNIFORM DECLARATORY JUDGMENTS ACT (TEXAS CIVIL PRACTICE AND REMEDIES CODE SECTION 37.001, ET SEQ., AS AMENDED), OR CHAPTER 271 OF THE TEXAS LOCAL GOVERNMENT CODE, LICENSEE AGREES TO ABANDON, WAIVE AND RELINQUISH ANY AND ALL RIGHTS TO THE RECOVERY OF ATTORNEY'S FEES TO WHICH LICENSEE MIGHT OTHERWISE BE ENTITLED.

LICENSEE AGREES THAT THIS IS THE VOLUNTARY AND INTENTIONAL RELINQUISHMENT AND ABANDONMENT OF A PRESENTLY EXISTING, KNOWN RIGHT. LICENSEE ACKNOWLEDGES THAT IT UNDERSTANDS ALL TERMS AND CONDITIONS OF THIS LICENSE. LICENSEE FURTHER ACKNOWLEDGES AND AGREES THAT THERE WAS AND IS NO DISPARITY OF BARGAINING POWER BETWEEN LICENSOR AND LICENSEE. THIS SECTION SHALL NOT BE CONSTRUED OR INTERPRETED AS A WAIVER OF GOVERNMENTAL IMMUNITY.

LICENSEE AND LICENSOR ARE RELYING ON THEIR OWN JUDGMENT. EACH PARTY HAD THE OPPORTUNITY TO DISCUSS THIS LICENSE WITH LEGAL COUNSEL PRIOR TO ITS EXECUTION.

F. Governing Law & Venue. All performance and payments made pursuant to this License shall be deemed to have occurred in Midland County, Texas. Exclusive venue for any claims, suits or any other action arising from or connected in any way to this License, or the performance of this License shall be in Midland County, Texas. The obligations and undertakings of each of the parties to this License shall be deemed to have been performed in Midland County, Texas. This License shall be construed, interpreted and enforced under the laws of the State of Texas. The laws of the State of Texas shall govern, construe and enforce all the rights and duties of the parties, including but not limited to tort claims and any and all other claims or disputes, arising from or relating in any way to the subject matter of this License, without regard to conflict of laws and rules that would direct application of the laws of another jurisdiction.

G. Release. NOTWITHSTANDING ANY OTHER PROVISIONS OF THIS LICENSE, LICENSEE HEREBY RELEASES, ACQUITS, RELINQUISHES AND FOREVER DISCHARGES LICENSOR, AND LICENSOR'S EMPLOYEES AND OFFICERS FROM ANY AND ALL DEMANDS, CLAIMS, DAMAGES OR CAUSES OF ACTION OF ANY KIND WHATSOEVER WHICH LICENSEE HAS OR MIGHT HAVE IN THE FUTURE, INCLUDING BUT NOT LIMITED TO BREACH OF CONTRACT, QUANTUM MERUIT, CLAIMS UNDER THE DUE PROCESS AND TAKINGS CLAUSES OF THE TEXAS AND UNITED STATES CONSTITUTIONS, TORT CLAIMS, OR LICENSOR'S NEGLIGENCE.

H. Governmental Immunity. By executing this License, Licensor is not waiving its right of governmental immunity. Licensor is retaining its immunity from suit. Licensor is not granting consent to be sued by legislative resolution or action. **THERE IS NO WAIVER OF GOVERNMENTAL IMMUNITY.**

I. Third Party Beneficiary. Except as provided in Article IV.B. above with respect to Indemnitees, (i) Licensor's granting of this License does not create any third-party beneficiary, (ii) there is no third-party beneficiary to this License, and (iii) no person or entity who is not a party to this License shall have any third party beneficiary or other rights hereunder.

J. Notices. Any notice or communication required in the administration of this License shall be sent by certified mail, return receipt requested, to the parties' respective mailing addresses as set forth hereinabove.

K. Notice of Alleged Breach; Statutory Prerequisite. Without limiting the provisions of Article IV.G. above, as a condition precedent to filing suit for alleged damages incurred by an alleged breach of an express or implied provision of this License, Licensee or its legal representative, shall give the City Manager, or any other reasonable official of Licensor, notice in writing (consisting of one (1) original and seven (7) copies of notice attached to a copy of this License) of such damages, duly verified, within one hundred eighty (180) days after the same has been sustained. The discovery rule does not apply to the giving of this notice. The notice shall include when, where and how the damages occurred, the apparent extent thereof, the amount of damages sustained, the amount for which Licensee will settle, the physical and mailing addresses of Licensee at the time

and date the claim was presented and the physical and mailing addresses of Licensee for the six (6) months immediately preceding the occurrence of such damages, and the names and addresses of the witnesses upon whom Licensee relies to establish its claim; and a failure to so notify the City Manager or other such official of Licensor within the time and manner provided herein shall exonerate, excuse and except Licensor from any liability whatsoever. Licensor is under no obligation to provide notice to Licensee that Licensee's notice is insufficient. Licensor reserves the right to request reasonable additional information regarding the claim. Said additional information shall be supplied within thirty (30) days after receipt of notice.

The statutory prerequisites outlined herein constitute jurisdictional requirements pursuant to Section 271.154 of the Texas Local Government Code and Section 311.034 of the Texas Government Code. Notwithstanding any other provision, Licensee's failure to comply with the requirements herein shall perpetually bar Licensee's claim for damages under Chapter 271 of the Texas Local Government Code, and Section 311.034 of the Texas Government Code, regardless if Licensor has actual or constructive notice or knowledge of said claim or alleged damages. Licensee agrees that the requirements of this entire License are reasonable.

L. Consideration. The terms of this License are supported by good and valuable consideration, the receipt and sufficiency of which is hereby acknowledged by the parties named herein.

M. Waiver of Governmental Immunity; Chapter 271, TEX. LOC. GOV'T CODE. The parties hereto agree that this License does not constitute a "Contract" for providing goods and/or services to Licensor as discussed in Subchapter I of Chapter 271 of the Texas Local Government Code, and Licensor does not waive, to the maximum extent allowed by law, any constitutional, statutory or common law right to sovereign immunity or governmental immunity from liability or suit. Licensor expressly does not consent to be sued or be liable. To the maximum extent allowed by law, nothing in this License constitutes a waiver of Licensor's governmental immunity and the parties hereto expressly agree that this License shall not constitute, nor be interpreted as a waiver of Licensor's governmental immunity under Subchapter I of Chapter 271 of the Texas Local Government Code, nor shall it constitute nor be interpreted as a waiver of Licensor's governmental immunity for the benefit of any third-party lacking privity to this License.

This License does not obligate Licensee to use the Property to construct, repair, operate, replace, or maintain Licensor's facilities or structures described herein, rather, it merely prohibits Licensee from using the Property for any other purpose. This License restricts the use of the Property to a specific purpose but does not require the use of the Property for a specific purpose. Licensee is not providing a service to Licensor. Licensee is paying Licensor for temporary rights in real property, not for a service. Any such provision shall be deemed to be a covenant against noncomplying use, not a covenant to use. Licensee's use of the Property in compliance with a restriction shall not constitute a service, and such complying use shall not operate to waive Licensor's governmental immunity.

N. Compliance. Licensee agrees that it shall comply with Texas Government Code Section 2252.908, as amended, to the extent that this statute applies to this License. Licensee agrees that it shall comply with Texas Local Government Code Section 176.006, as amended, to the extent that this statute applies to this License.

O. Texas Historical Commission Survey. Licensee agrees that it shall comply with Chapter 191

of the Texas Natural Resources Code. By executing this License, Licensee represents that it has contacted the Texas Historical Commission (the "Commission") for the purpose of determining whether the Commission will request that an archaeological survey be completed before Licensee commences operations on the Property, as contemplated herein. Licensee agrees that it shall complete or cause to be completed an archaeological survey before commencing any operations on the Property if the Commission so requests and deliver the same to Licensor. Notwithstanding any provision contained herein, in the event that any site, object, artifact, or other feature of archaeological, scientific, educational, cultural, or historical interest is encountered during the operations authorized by this License, Licensee will immediately notify Licensor and the Commission so that adequate measures may be undertaken to protect or recover such discoveries or findings, as deemed appropriate by Licensor or the Commission.

P. Waiver. No waiver of any of the provisions of this License shall be deemed or constitute a waiver of any other provisions of this License, nor shall such waiver constitute a continuing waiver unless otherwise expressly provided. Likewise, the failure of Licensor to enforce any provision of this License shall not be deemed nor shall constitute a waiver of the right of Licensor to enforce such provision.

Q. Counterpart Execution. This License may be executed in several counterparts, and any such agreement shall be deemed an original for all intents and purposes.

R. No Release of Liability. Notwithstanding anything to the contrary contained in this License, the termination or expiration of this License shall not relieve Licensee of any liability, duty or obligation under this License, nor shall it preclude Licensor from asserting any right to specific performance, damages or any other rights or remedies to which Licensor may be entitled. Upon termination or expiration of this License for any reason, Licensee shall execute and deliver a recordable release of this License to Licensor in form and substance satisfactory to Licensor.

S. Entire Agreement. This License constitutes the entire agreement between Licensor and Licensee concerning the subject matter hereof, superseding all negotiations, prior discussions, prior licenses and prior agreements and understandings related to the subject matter hereof. This License may only be amended by written instrument executed by Licensor and Licensee.

[Signature Pages Follow]

LICENSOR:
CITY OF MIDLAND, TEXAS

By:_____
Morris Williams, Jr, Interim City Manager

ATTEST:

_____
Marcia Bentley-German, City Secretary

APPROVED AS TO CONTENT AND COMPLETENESS:

_____
Carl Craigo, Director of Utilities

APPROVED ONLY AS TO FORM:

_____
John Ohnemiller, City Attorney

LICENSEE:
TARGA PIPELINE MID-CONTINENT WESTTEX LLC

By: _____
Printed Name: Norman L. Winter
Title: Vice President of Land and ROW

THE STATE OF Texas §
§
COUNTY OF Harris §

BEFORE ME, the undersigned authority, on this 13th day of June, 2023 personally appeared Norman L. Winter an officer of Targa Pipeline Mid-Continent WestTex LLC known to me to be the person and official whose name is subscribed to the foregoing instrument and acknowledged to me that he executed the same as the act and deed of said entity, for the purposes and consideration therein expressed, and in the capacity therein stated.

GIVEN UNDER MY HAND AND SEAL OF OFFICE this the 13th day of June, 2023.

_____
Notary Public, State of Texas

KIMBERLY NICHOLE NIETO
Notary ID #131475624
My Commission Expires
March 5, 2026

City Council Meeting

Item Number: 14

Meeting Date: June 27, 2023, July 11, 2023

To: City Council / City Manager

From: Landon Ochoa, Senior Planner

Subject: AN ORDINANCE VACATING AND ABANDONING A 0.069-ACRE PORTION OF ALLEY RIGHT-OF-WAY LOCATED ADJACENT TO LOTS 1 THROUGH 3 AND LOTS 6 THROUGH 8, BLOCK 75, WEST END ADDITION, CITY AND COUNTY OF MIDLAND, TEXAS (GENERALLY LOCATED ON THE EAST SIDE OF ANDREWS HIGHWAY, APPROXIMATELY 200 FEET SOUTH OF WEST TEXAS AVENUE); ADOPTING THE APPRAISAL BY THE CITY MANAGER OF $12,024.00; RETAINING A NONEXCLUSIVE UTILITY EASEMENT; AND ORDERING RECORDATION BY THE CITY SECRETARY (DISTRICT 3) (DEVELOPMENT SERVICES)

Purpose:

Kevin Matson and Aaron Burrell is requesting to vacate a 0.069-acre alley, located in Lots 1-3, Lots 6-8, Block 75, West End Addition, City and County of Midland, Texas, to replat into one lot for future development.

Recommended City Council Action:

Approve

Fiscal Impact:

Not applicable.

Discussion:

The approximated area that will be vacated is 3,005.64 square feet (0.069-acres).

This request has been circulated and reviewed by all pertinent City departments and franchise utility companies. Their comments, conditions, and requests are as follows:

Code Compliance: (Approved)

No oil and gas issues.

Building Code: (Approved)

No objections.

Engineering: (Approved)

No objections to vacation. Applicant shall be responsible for relocating any utilities, if existing, or providing easements as needed.

Fire: (Approved)

No objections.

Transportation: (Approved)

No objections to vacation. Applicant shall be responsible for relocating any utilities, if existing, or providing easements as needed.

GIS: (Approved)

Please indicate POB on visual. Also, please include another set of x-y coordinates.

AT&T: (Approved)

I don’t see anything down the alley, but we do have cable on North O Street going into 200 Andrews Hwy.

Atmos: (Approved)

Atmos Energy currently has facilities located within the above-described alley Right of Way E. of Andrews Hwy. between W. Illinois and W. Texas. We currently have a gas main that extends into the proposed vacate area. Atmos would have no objection to this vacation if a utility easement is maintained or, if requested, the line was to be relocated or retired. Any relocation/retirement costs would be passed on to the individual or entity requesting the vacate.

Astound: (Approved)

It looks like we do not have services in the vicinity per astound maps.

Oncor: (Approved)

Oncor does have facilities in the alley and since it will be vacated and a utility easement will be in place on the new re-plat, Oncor is good with the utility easement and the alley can be vacated.

Optimum: (Approved)

We, Optimum, do not have any plant in that alley.

Planning:

Pertinent City departments and franchise utility companies have reviewed this vacation request and have approved the request. The City will retain an accessible nonexclusive utility easement across, thru, over, under, on and along the property until all entities that were using the property for utility purposes have abandoned their uses of the property.

Therefore, staff recommends approval of the vacation of a 0.069-acre alley, located in Lots 1-3, Lots 6-8, Block 75, West End Addition, City and County of Midland, Texas to replat lots 1-3 into one lot for future development, subject to conditions A through B.

Conditions:

A. **That the value of the property shall be $12,024.**

B. **That a replat of the subject property is approved by the City of Midland and filed and recorded with the County Clerk of Midland County.**

Letters of Objection:

As of June 15, 2023, staff has not received any letters of objection to this request.

Attachments:

Vacation Survey (Exhibit A)
Application
Maps
Responses from Franchise Utility Companies

Morris William Jr.

ORDINANCE NO. _____

AN ORDINANCE VACATING AND ABANDONING A 0.069-ACRE PORTION OF ALLEY RIGHT-OF-WAY LOCATED ADJACENT TO LOTS 1 THROUGH 3 AND LOTS 6 THROUGH 8, BLOCK 75, WEST END ADDITION, CITY AND COUNTY OF MIDLAND, TEXAS (GENERALLY LOCATED ON THE EAST SIDE OF ANDREWS HIGHWAY, APPROXIMATELY 200 FEET SOUTH OF WEST TEXAS AVENUE); ADOPTING THE APPRAISAL BY THE CITY MANAGER OF $12,024.00; RETAINING A NONEXCLUSIVE UTILITY EASEMENT; AND ORDERING RECORDATION BY THE CITY SECRETARY

WHEREAS, it has been determined by the Midland City Council that a 0.069-acre portion of alley right-of-way located adjacent to Lots 1 through 3 and Lots 6 through 8, Block 75, West End Addition, City and County of Midland, Texas, as described in Exhibit "A" attached hereto and made a part hereof for all legal purposes (the "Property"), is no longer needed for public use; and

WHEREAS, Section 272.001 of the Texas Local Government Code provides that a political subdivision may not convey, sell, or exchange its interest in land without observing notice and bid requirements, unless the conveyance is to one or more abutting property owners; and

WHEREAS, an application for vacating the Property has been received by the City from the abutting property owner; and

WHEREAS, the City Manager has appraised the value of the City's property interest in the Property at $12,024.00, as shown in Exhibit "B" attached hereto and incorporated herein by reference; and

WHEREAS, the Council finds it to be in the public interest to abandon and vacate the Property;

NOW, THEREFORE, BE IT ORDAINED BY THE CITY COUNCIL OF THE CITY OF MIDLAND, TEXAS:

SECTION ONE. That the Property is hereby vacated and abandoned for all public

purposes. Provided, however, that the City is hereby abandoning only the public interest in the Property, and this ordinance in no way affects any private easement or access easement which abutting property owners may have in the Property.

SECTION TWO. That this ordinance shall not be effective until:

A. the City of Midland has received from the abutting property owner(s) the sum of $12,024.00; and

B. a replat of the Property is approved by the City of Midland and filed and recorded with the County Clerk of Midland County, Texas.

SECTION THREE. That the City herein retains an accessible nonexclusive utility easement across, through, over, under, on and along the Property until all entities that were using the Property for utility purposes as of the date of approval of this ordinance have abandoned their uses of the Property.

SECTION FOUR. That upon the City's receipt of the sum set forth in Section Two hereof, the City Secretary is hereby authorized and directed to file a certified copy of this ordinance with the County Clerk of Midland County, Texas, for purposes of recording in the Official Records of Midland County, Texas.

The above and foregoing ordinance was duly proposed, read in full and adopted on first reading, the _____ day of _____, A.D., 2023; and passed to second reading on motion of Council member _____, seconded by Council member _____, by the following vote:

Council members voting "AYE":

Council members voting "NAY":

The above and foregoing ordinance was read in full and finally adopted by the following vote upon motion of Council member _____, seconded by Council member _____, on the _____ day of _____, A.D., 2023, at a regular meeting of the City Council:

Council members voting "AYE":

Council members voting "NAY":

PASSED AND APPROVED THIS _____ day of _____, A.D., 2023.

_____
Lori Merritt Blong, Mayor

ATTEST:

_____
Marcia Bentley-German, City Secretary

APPROVED AS TO CONTENT
AND COMPLETENESS:

_____
Charles Harrington, Director of Development Services

APPROVED ONLY AS TO FORM:

_____
John Ohnemiller, City Attorney

EXHIBIT "A"

METES & BOUNDS DESCRIPTION FOR A 20 FOOT ALLEY VACATION IN BLOCK 75, WEST END ADDITION, CITY & COUNTY OF MIDLAND, TEXAS

Legal Description for a 0.069 Acre Tract of Land being a 20 Foot Alley in Block 75, West End Addition recorded in Cabinet E Page 52, Midland County Plat Records, located in the City and County of Midland, Texas.

Boundary being more fully described by Metes & Bounds as follows:

Beginning at (N:10693372.64',E:1749407.60') a MAG nail set in the west right of way line of 'O' Street at the southeast corner of Lot 1, said Block 75 for the northeast corner of this tract;

Thence South 14°35'01" East with the west right of way line of said 'O' Street, a distance of 20.00 feet to a MAG nail set at the northeast corner of Lot 8, said Block 75 for the southeast corner of this tract;

Thence South 75°23'06" West with the north line of said Lot 8, passing the common north corners in said Block 75 of Lots 8, 7, and 6, continuing for a total distance of 150.00 feet to a point near a building corner in the east right of way line of S.H. 158 (Andrews Highway) at the northwest corner of said Lot 6 for the southwest corner of this tract;

Thence North 14°35'01" West with the east right of way line of said S.H. 158 (Andrews Highway), a distance of 20.00 feet to a MAG nail set at the southwest corner of Lot 3, said Block 75 for the northwest corner of this tract;

Thence North 75°23'06" East with the south line of said Lot 3, passing the common south corners in said Block 75 of Lots 3, 2, and 1, continuing for a total distance of 150.00 feet to the Point of Beginning.

Containing 0.069 acres or 3000 square feet of land.

Bearings & Coordinates shown on this survey are relative to the Texas Coordinate System, NAD 1983, Central Zone (CORS).

I, Aaron S. Burrell, do hereby certify: This plat represents a legal survey made on the ground on July 07, 2022, by me, of the property legally described hereon. All information shown is true and correct to the best of my knowledge and belief.

01 August 2022

STATE OF TEXAS REGISTERED AARON SCOTT BURRELL 5689 PROFESSIONAL LAND SURVEYOR

Aaron S. Burrell
Registered Professional Land Surveyor
Texas No. 5689

AARON BURRELL LAND SURVEYORS, LLC.

Professional Land Surveying & Mapping
Aaron Burrell Land Surveyors, LLC
TBPLS Firm No. 10194217
415 W. Wall St., Suite 204 Midland, Texas 79701
P.O. Box 81041 Midland, Texas 79708
432-848-4439
www.asbsurveyors.com

Page 2 of 2
2022-521

MIDLAND
Feel the Energy!

Office of the City Manager

June 15, 2023

Midland City Council
City of Midland, Texas

RE: Request for vacation of a 0.069-acre portion of alley right-of-way located adjacent to Lots 1 through 3 and Lots 6 through 8, Block 75, West End Addition, City and County of Midland, Texas

Dear Members of the City Council:

The above-referenced property has been appraised in accordance with Chapter 272 of the Texas Local Government Code. The fair market value of the property is $12,024.00. Upon the City's receipt of this sum from the adjoining property owner(s), the ordinance vacating and abandoning the City's interest in the property may be recorded in the Midland County Clerk's office.

Very truly yours,

Morris Williams, Jr.
Interim City Manager

EXHIBIT "B"

300 N. Loraine, Midland TX 79701 • 432-685-7202 • Fax 432-686-1600

MIDLAND Planning Division

Vacate Right-of-Way/Public Utility Easement/Land/Street Application

Project Number: V-23-0052

Case Number: _____

Applicant *(if acting as Agent, see affidavit on page 2)* Printed Name: Kevin Mattson / Aaron Burrell		Phone (972) 369-4123 Email Kmattson@redskyholdings.com & aaron@asbsurveyors.com
Address 15110 Dallas Pkwy, Ste 440	City Dallas	State TX Zip 75248

Application is hereby made to the City Council to vacate the following:

- ☑ Right-of-Way
- ☐ Public Utility Easement
- ☐ Land
- ☐ Street

Description of Address: 20 Foot Alley in Block 75, West End Addition, City of Midland, Texas.

Reason for Request: Replatting into one lot w/ Lots 1-3 for future re-building.

Reasons, in applicant's opinion, why the requested vacation will not adversely affect the public welfare or will contribute to it in a positive way: Access & utility easements will continue to exist.

Submittal and Fees

Items to be submitted with this application form:

- Application Fee – Payable to the 'City of Midland' $400.00
- Sealed metes and bounds description of the property to be vacated (included on the map) and total square feet of vacation. Include ownership, legal and deed information for adjacent property owners
- Digital Copies of Survey (PDF/JPEG)

Utility Company Approval

Clearance is needed from the following utility companies:

- City of Midland
- AT&T
- Atmos Energy
- Suddenlink Cable TV Co.
- Oncor Electric
- Grande Communications

The City will route the request to these companies, but it is the applicant's responsibility to ensure clearance has been obtained to resolve any issues that may arise.

Policies

1. If the vacation request involves only a portion of a section right-of-way, such that approval would not affect the public's ability to travel along said right-of-way, then the request will be scheduled for consideration by the City Council. No public hearing will be needed.

2. If the vacation request involves an entire section of right-of-way, such that approval would cause the public to lose all rights to use it, then the following procedures apply:

   a. Nearby land owners who have a reasonable expectation to use said right-of-way, as determined by the Transportation Division, must first agree to the proposed vacation. It is the applicant's responsibility to obtain a letter of concurrence signed by the affected landowners.

   b. If all letters are received indicating that the affected landowners agree to the request, then a public hearing before the City Council will be scheduled. The Planning Division will mail public notice of the hearing to landowners within 400 feet of the affected right-of-way.

   c. If a request is approved, the right-of-way shall be divided into two equal parts, with each half becoming the property of the respective abutting owner. If the applicant desires to own the entire width, he or she must negotiate with the opposite landowner.

Signatures

Applicant (signature): AP Ball for Kevin Mattson		Date: 5/16/23
Affected Property Owners:		
Signature:	Print: MICHAEL BRITT	Date: 5/2/23
Signature:	Print: Sonny Aguilar	Date 5/10/23
Signature:	Print:	Date
Signature:	Print:	Date

The Vacation of right-of-way/public utility easement/land/street shall be considered officially received in the Planning office only when it has been submitted in full compliance with the provisions of Section 212 of the Texas Local Government Code and the Zoning Code of Ordinances of the City of Midland and when such required items for the application are also received.

All materials, including exhibits, submitted in support of an application, or displayed during a public hearing, shall remain the property of the City of Midland.

FOR OFFICE USE ONLY

☑ 1 FOLDED Copy of Survey ☑ Survey in Digital Format (PDF/JPEG)

☑ Application Fee

Check # 53258

Received By: AW Date: RECEIVED MAY 18 2023

BY: AW

Application will not be considered for scheduling until reviewed by a planner.

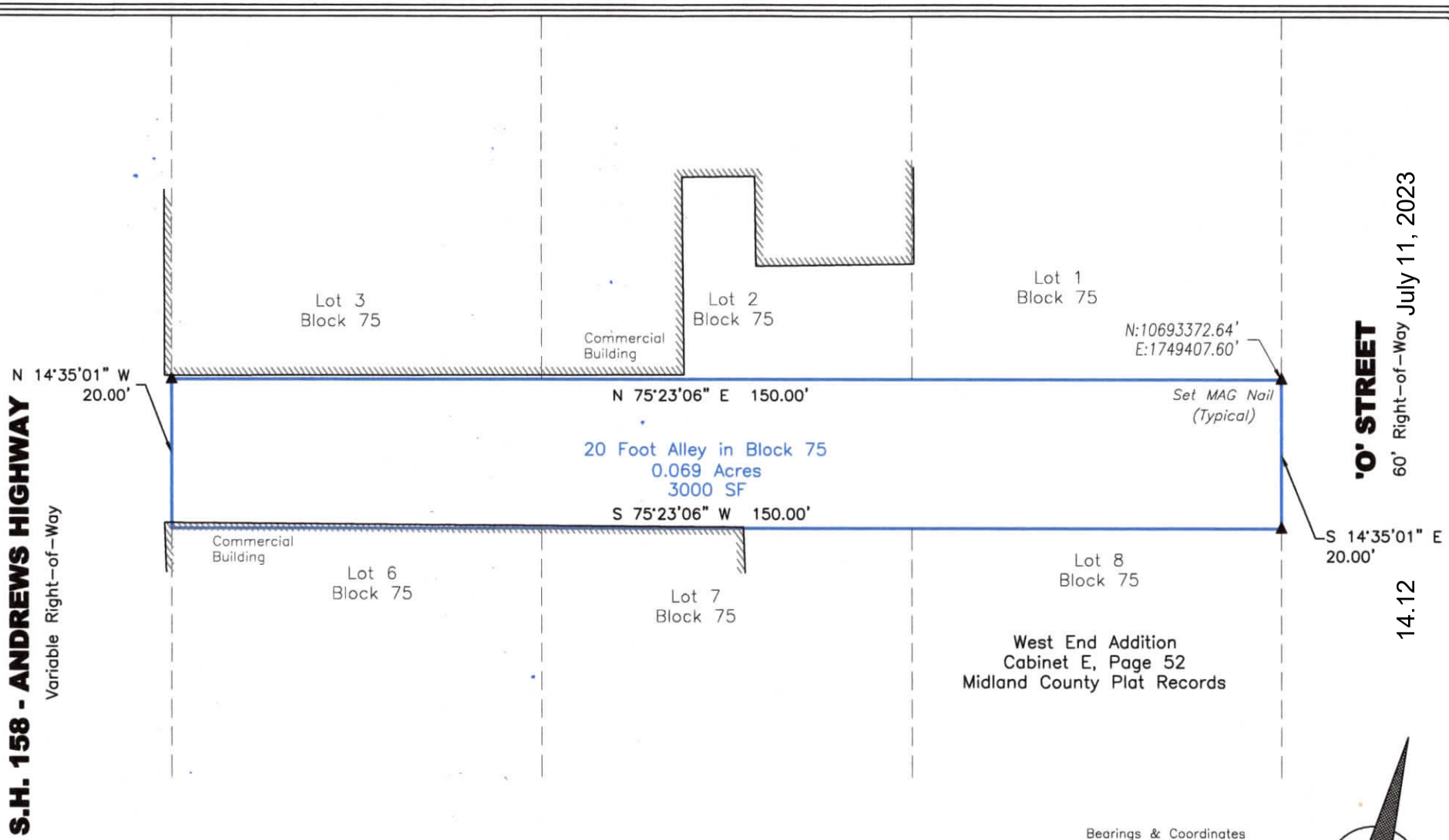

AARON BURRELL
LAND SURVEYORS, LLC.

BOUNDARY EXHIBIT FOR A 20 FOOT ALLEY VACATION IN BLOCK 75, WEST END ADDITION, CITY & COUNTY OF MIDLAND, TEXAS

01 August 2022

Professional Land Surveying & Mapping
Aaron Burrell Land Surveyors, LLC
TBPLS Firm No. 10194217
415 W. Wall St., Suite 204 Midland, Texas 79701
P.O. Box 81041 Midland, Texas 79708
432-848-4439
www.asbsurveyors.com

PACKET

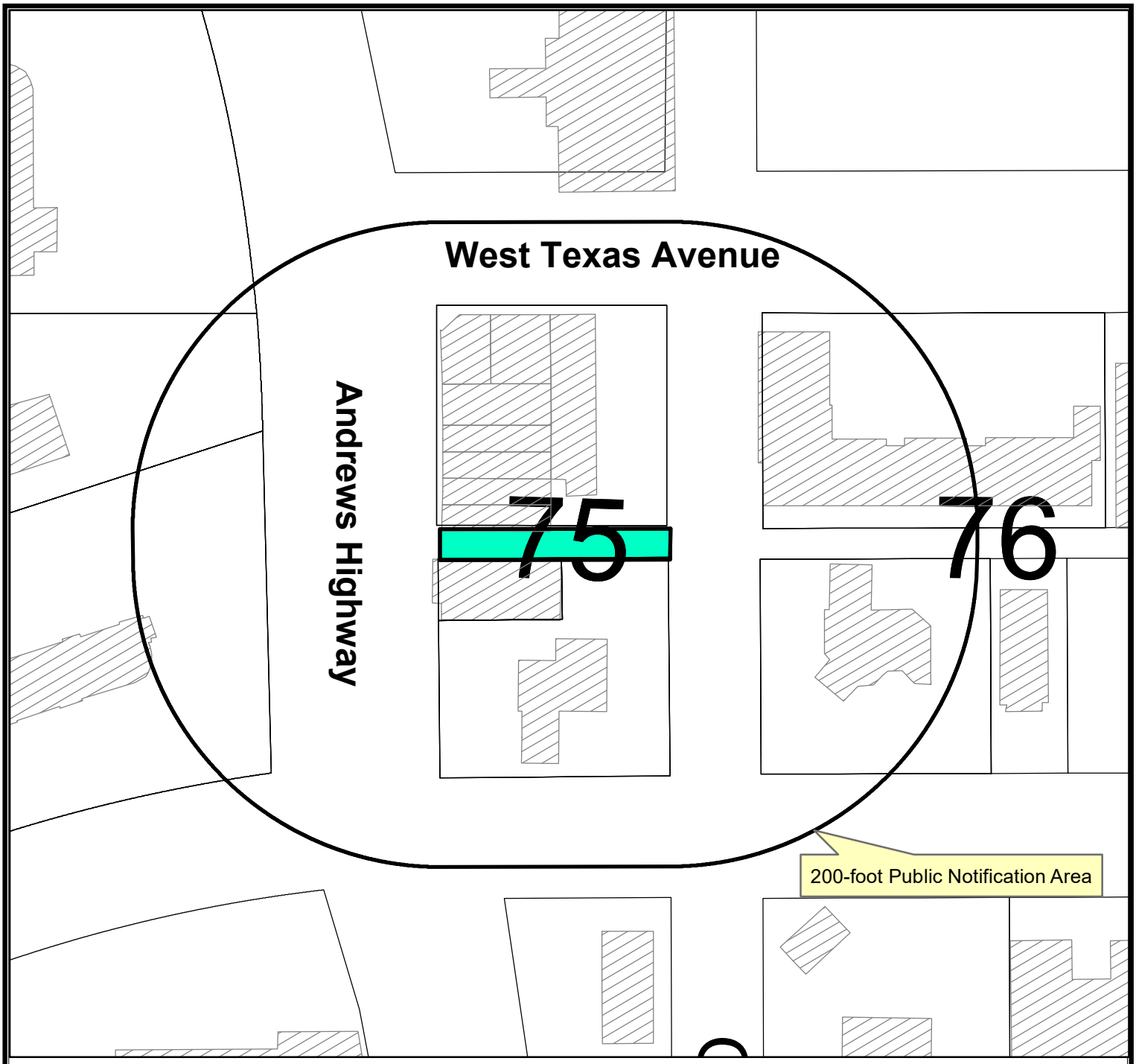

LOCATION MAP

V-23-0052 **Scale: 1" = 1,117'**

A request for a vacation of a .069-acre portion of alley right-of-way, located adjacent to Lots 1-3 and Lots 6-8, Block 75, West End Addition, City and County of Midland, Texas.

Generally located on the east side of Andrews Highway, approximately 200 feet south of West Texas Avenue. (Council District 3)

LEGEND

- CITY LIMITS
- PARCEL
- PRIVATE BLDGS



©THE CITY OF MIDLAND - 2021
THIS DATA IS NOT A SUBSTITUTION FOR A SURVEY AND NOR IS IT DESIGNED TO BE USED AS A PRIMARY TOOL IN PERMITTING OR OTHER DECISIONS BASED SOLELY ON THE INFORMATION CONTAINED HEREIN.
THE CITY OF MIDLAND SHALL NOT BE RESPONSIBLE FOR ANY DECISIONS BASED UPON THE USE OF THIS DATA.

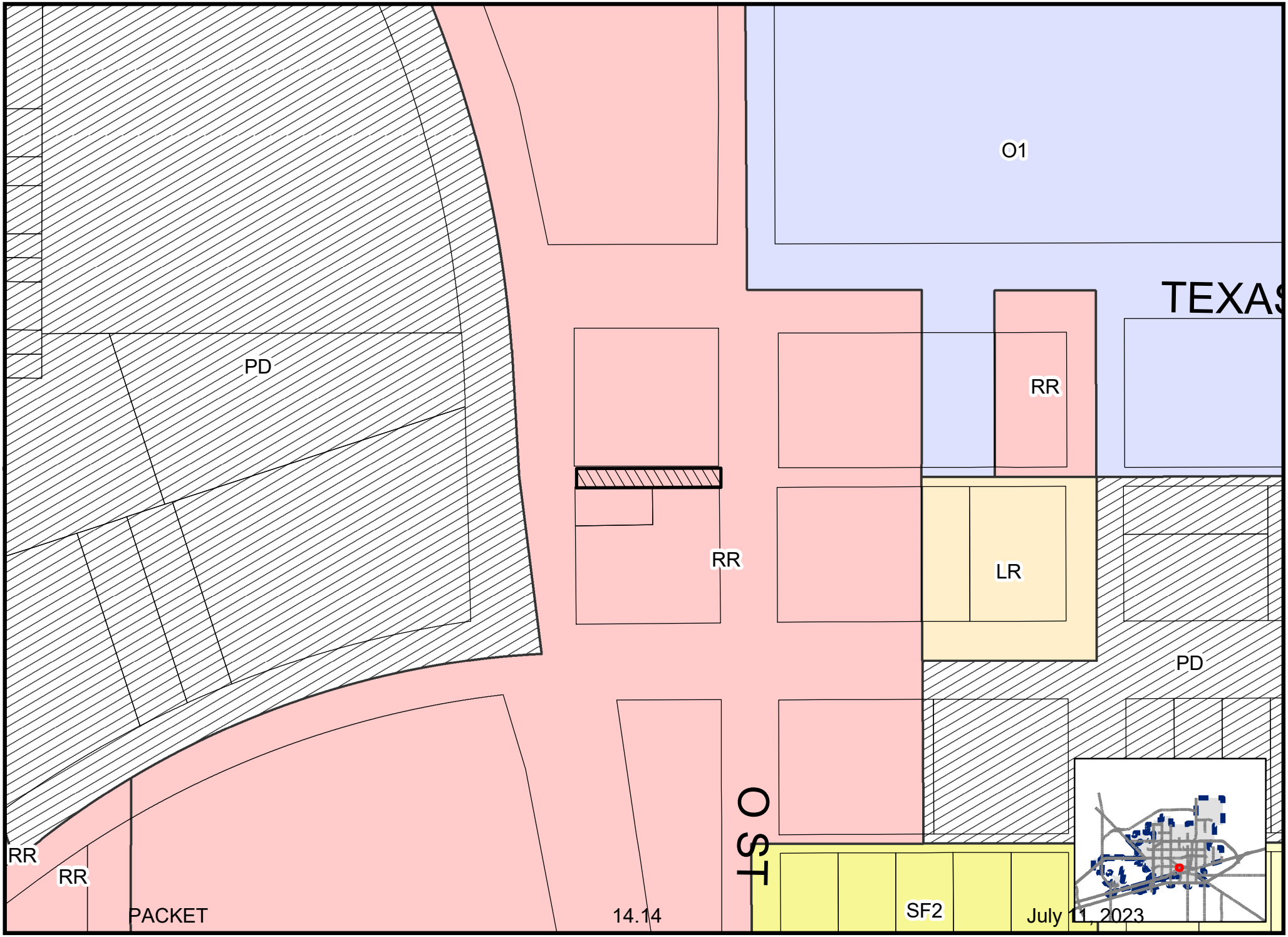

Map By LO, 6/15/2023

V-23-0052

Scale: 1" = 1,500'

ZONING MAP

© THE CITY OF MIDLAND - 2021: THIS DATA IS NOT A SUBSTITUTION FOR A SURVEY PRODUCT, NOR IS IT DESIGNED TO BE USED AS A PRIMARY TOOL IN PERMITTING OR OTHER DECISIONS BASED SOLELY ON THE INFORMATION CONTAINED HEREIN. THE CITY OF MIDLAND SHALL NOT BE RESPONSIBLE FOR ANY DECISIONS BASED UPON THE USE OF THIS DATA.

ATMOS ENERGY

West Texas Division
P.O. Box 1111,
Midland, Texas 79702

City of Midland
Landon Ochoa
Planning Division
Development Services
300 N. Loraine
Midland, Texas 79701

June 9, 2023

Re: Case Name: West End Addition
Case Number: V-23-0052

Mr. Ochoa,

Atmos Energy currently has facilities located within the above-described alley Right of Way E. of Andrews Hwy. between W. Illinois and W. Texas. We currently have a gas main that extends into the proposed vacate area. Atmos would have no objection to this vacation if a utility easement is maintained or, if requested, the line was to be relocated or retired. Any reloction/retirement costs would be passed on to the individual or entity requesting the vacate.
Please let me know if you have any further questions.

Sincerely,

Mark Lieb

Mark Lieb
Project Specialist
Atmos Energy/Permian Basin
432-967-0370 cell
mark.lieb@atmosenergy.com

Landon J. Ochoa

From: Lieb, Mark <Mark.Lieb@atmosenergy.com>
Sent: Friday, June 9, 2023 1:30 PM
To: Landon J. Ochoa
Subject: RE: V-23-0052, West End Vacation
Attachments: Request to Vacate West End alley ROW.pdf; V-23-0052, Utility Letter (Atmos).pdf



Landon,
Please see attached.
Thanks.

Mark Lieb
Project Specialist
Atmos Energy/Permain Basin
432-967-0370 cell
Mark.Lieb@atmosenergy.com

From: Landon J. Ochoa <ljochoa@midlandtexas.gov>
Sent: Tuesday, June 6, 2023 3:41 PM
To: Lieb, Mark <Mark.Lieb@atmosenergy.com>
Subject: [EXT] RE: V-23-0052, West End Vacation

CAUTION: Don't be quick to click. This e-mail originated from outside of Atmos Energy. Do not click links or open attachments unless you recognize the sender and know the content is safe.

I forgot to attach the maps. Here you go.

From: Landon J. Ochoa
Sent: Tuesday, June 6, 2023 12:04 PM
To: Mark Lieb <mark.lieb@atmosenergy.com>
Subject: V-23-0052, West End Vacation

Good morning,

Kevin Mattson and Aaron Burrell have submitted a request to vacate an alley. Please see the attached documents and provide comments by June 14. If you do not have any comments, please tell me that you have no comment. You can simply reply to this email to submit your comment. If you have any questions, you can call or email me.

Thank you for your cooperation.

Respectfully,

Landon Ochoa
Planner
Planning Division
Development Services
O. 432-685-7405
ljochoa@midlandtexas.gov





300 N. Loraine | P.O. Box 1152 | Midland, TX 79702

CAUTION: This email originated from outside your organization — exercise caution when opening attachments or clicking links, especially from unknown senders.

Landon J. Ochoa

From: LReyna@midcad.org
Sent: Wednesday, June 7, 2023 1:23 PM
To: Landon J. Ochoa
Subject: Re: West End Addition Alley Vacation
Attachments: V-23-0052, TaxVacMCAD vac ltr.pdf; V-23-0052, Location Map.pdf; V-23-0052, Survey.pdf

Landon,

This is your information per your request .069 X $4.00 sq ft + $12,024 market value (estimated)

Thank you,

Lisa Reyna, RPA
Assistant Chief Appraiser
Midland Central Appraisal District
4631 Andrews Hwy
Midland, TX 79703
Phone (432) 699-4991
Fax (432) 689-7185

From:	"Landon J. Ochoa" <ljochoa@midlandtexas.gov>
To:	Lisa Reyna <lreyna@midcad.org>
Date:	06/06/2023 11:12 AM
Subject:	West End Addition Alley Vacation

Good morning,

Please see the attached letter regarding a request for a vacation of an alley. Please provide us with the valuation by June 14. Thank you for your cooperation. If you have any questions please let me know.

Respectfully,

Landon Ochoa
Planner
Planning Division
Development Services
O. 432-685-7405
ljochoa@midlandtexas.gov

300 N. Loraine | P.O. Box 1152 | Midland, TX 79702

CAUTION: This email originated from outside your organization — exercise caution when opening attachments or clicking links, especially from unknown senders.

Landon J. Ochoa

From: Luis Montez <Luis.Montez@AlticeUSA.com>
Sent: Tuesday, June 6, 2023 4:22 PM
To: Landon J. Ochoa
Cc: Eron Zapata
Subject: RE: External E-mail - RE: V-23-0052, West End Vacation



We, Optimum do not have any plant in that alley.

From: Landon J. Ochoa <ljochoa@midlandtexas.gov>
Sent: Tuesday, June 6, 2023 3:39 PM
To: Luis Montez <Luis.Montez@AlticeUSA.com>
Subject: External E-mail - RE: V-23-0052, West End Vacation

[External Email]

Caution: This email originated outside of Altice USA. Please do not click links or attachments unless you recognize the sender and know the content is safe.

Sorry, I forgot to attach the maps. They are attached.

From: Landon J. Ochoa
Sent: Tuesday, June 6, 2023 12:02 PM
To: Luiz Montez <luis.montez@alticeusa.com>
Subject: V-23-0052, West End Vacation

Good morning,

Kevin Mattson and Aaron Burrell have submitted a request to vacate an alley. Please see the attached documents and provide comments by June 14. If you do not have any comments, please tell me that you have no comment. You can simply reply to this email to submit your comment. If you have any questions, you can call or email me.

Thank you for your cooperation.

Respectfully,

Landon Ochoa
Planner
Planning Division
Development Services
O. 432-685-7405
ljochoa@midlandtexas.gov

300 N. Loraine | P.O. Box 1152 | Midland, TX 79702

Caution: This email originated outside of Altice USA. Please do not click links or attachments unless you recognize the sender and know the content is safe.

The information transmitted in this email and any of its attachments is intended only for the person or entity to which it is addressed and may contain information concerning Altice USA and/or its affiliates and subsidiaries that is proprietary, privileged, confidential and/or subject to copyright. Any review, retransmission, dissemination or other use of, or taking of any action in reliance upon, this information by persons or entities other than the intended recipient(s) is prohibited and may be unlawful. If you received this in error, please contact the sender immediately and delete and destroy the communication and all of the attachments you have received and all copies thereof.

CAUTION: This email originated from outside your organization — exercise caution when opening attachments or clicking links, especially from unknown senders.

Landon J. Ochoa

From: Ruben Guerra <ruben.guerra@astound.com>
Sent: Thursday, June 15, 2023 1:48 PM
To: Landon J. Ochoa
Subject: Re: V-23-0052, West End Vacation



It looks like we do not have services in the vicinity per astound maps.

Thank You
Ruben Guerra
Construction Coordinator
O: 432-272-3088
C: 432-653-9369
Ruben.Guerra@astound.com
Astound Business Solutions
Powered by RCN | Grande | Wave
astound.com

On Thu, Jun 15, 2023 at 10:39 AM Landon J. Ochoa <ljochoa@midlandtexas.gov> wrote:

> Ruben,
>
> This just a reminder that we urgently need your comments for this one this morning so we can keep this on the agenda. Thank you.
>
> **From:** Ruben Guerra <ruben.guerra@astound.com>
> **Sent:** Wednesday, June 14, 2023 5:15 PM
> **To:** Landon J. Ochoa <ljochoa@midlandtexas.gov>
> **Subject:** Re: V-23-0052, West End Vacation
>
> I am out of the office as of right now will return tomorrow and look at my maps to see if we are in the area.
>
> On Wed, Jun 14, 2023 at 4:37 PM Landon J. Ochoa <ljochoa@midlandtexas.gov> wrote:

Ruben,

Do you have any comments for this one? I don't believe I have received any comments from you. We need your comments as soon as possible or this request will not be able to go to City Council.

From: Landon J. Ochoa
Sent: Tuesday, June 6, 2023 12:06 PM
To: Ruben Guerra <ruben.guerra@astound.com>
Subject: V-23-0052, West End Vacation

Good morning,

Kevin Mattson and Aaron Burrell have submitted a request to vacate an alley. Please see the attached documents and provide comments by June 14. If you do not have any comments, please tell me that you have no comment. You can simply reply to this email to submit your comment. If you have any questions, you can call or email me.

Thank you for your cooperation.

Respectfully,

Landon Ochoa

Planner

Planning Division

Development Services

O. 432-685-7405

ljochoa@midlandtexas.gov







300 N. Loraine | P.O. Box 1152 | Midland, TX 79702

--

Thank You

Ruben Guerra

Construction Coordinator

O: 432-272-3088

C: 432-653-9369

Ruben.Guerra@astound.com

Astound Business Solutions

Powered by RCN | Grande | Wave

astound.com

CAUTION: This email originated from outside your organization — exercise caution when opening attachments or clicking links, especially from unknown senders.

CAUTION: This email originated from outside your organization — exercise caution when opening attachments or clicking links, especially from unknown senders.

Landon J. Ochoa

From: Arguello, Martin <Martin.Arguello@oncor.com>
Sent: Thursday, June 15, 2023 12:05 PM
To: Hamilton, Hannah; Landon J. Ochoa; Molina, Sergio
Subject: RE: V-23-0052, West End Vacation

Hannah, Oncor has facilities in this alley and have an easement to serve a 3-phase transformer. We cannot vacate, but can re-route Oncor facilities with a cost and re-secure the easement.

From: Hamilton, Hannah <Hannah.Hamilton@oncor.com>
Sent: Thursday, June 15, 2023 10:57 AM
To: Landon J. Ochoa <ljochoa@midlandtexas.gov>; Molina, Sergio <Sergio.Molina@oncor.com>; Arguello, Martin <Martin.Arguello@oncor.com>
Subject: RE: V-23-0052, West End Vacation

Hi Landon,
Thanks for the follow up call.
I have followed up with Martin and Sergio, we are looking into this to provide an answer.
Thank you,

Hannah Hamilton
Oncor | PMDS

Cell: 432.894.4601
Hannah.hamilton@oncor.com

My Director: James Blanton
Cell: 817.905.6455 **Email:** James.Blanton@oncor.com

From: Landon J. Ochoa <ljochoa@midlandtexas.gov>
Sent: Thursday, June 15, 2023 10:34 AM
To: Molina, Sergio <Sergio.Molina@oncor.com>; Hamilton, Hannah <Hannah.Hamilton@oncor.com>
Subject: FW: V-23-0052, West End Vacation

WARNING: This email message did not originate from Oncor and is from an external organization. **DO NOT CLICK** links or attachments unless you recognize the sender and are certain the content is safe.

Good morning,

I have not gotten a response from Oncor regarding this vacation. We urgently need comments from you this morning as we are closing the agenda today. Please provide comments as soon as you can.

From: Landon J. Ochoa
Sent: Tuesday, June 6, 2023 11:24 AM
To: Martin Arguello <martin.arguello@oncor.com>
Subject: V-23-0052, West End Vacation

Good morning,

Kevin Mattson and Aaron Burrell have submitted a request to vacate an alley. Please see the attached documents and provide comments by June 14. If you do not have any comments, please tell me that you have no comment. You can simply reply to this email to submit your comment. If you have any questions, you can call or email me.

Thank you for your cooperation.

Respectfully,

Landon Ochoa
Planner
Planning Division
Development Services
O. 432-685-7405
ljochoa@midlandtexas.gov

MIDLAND
Feel the Energy!

300 N. Loraine | P.O. Box 1152 | Midland, TX 79702

Confidentiality Notice: This email message, including any attachments, contains or may contain confidential information intended only for the addressee. If you are not an intended recipient of this message, be advised that any reading, dissemination, forwarding, printing, copying or other use of this message or its attachments is strictly prohibited. If you have received this message in error, please notify the sender immediately by reply message and delete this email message and any attachments from your system.

CAUTION: This email originated from outside your organization — exercise caution when opening attachments or clicking links, especially from unknown senders.

Landon J. Ochoa

From: UNDERWOOD, JERRY D <ju1659@att.com>
Sent: Thursday, June 15, 2023 6:49 AM
To: Landon J. Ochoa
Subject: RE: V-23-0052, West End Vacation
Attachments: 200 Andrews Hwy cable.png

Sorry about that, I ended up out of town. I don't see anything down the alley but we do have cable on N O st. going into 200 Andrews Hwy. I have attached the map with a red line where our cable is.

Thanks,
Jerry

From: Landon J. Ochoa <ljochoa@midlandtexas.gov>
Sent: Wednesday, June 14, 2023 4:35 PM
To: UNDERWOOD, JERRY D <ju1659@att.com>
Subject: RE: V-23-0052, West End Vacation

Jerry,

Do you have any comments? I don't believe I have gotten any comments from you for this one.

From: Landon J. Ochoa
Sent: Tuesday, June 6, 2023 12:04 PM
To: Jerry Underwood <ju1659@att.com>
Subject: V-23-0052, West End Vacation

Good morning,

Kevin Mattson and Aaron Burrell have submitted a request to vacate an alley. Please see the attached documents and provide comments by June 14. If you do not have any comments, please tell me that you have no comment. You can simply reply to this email to submit your comment. If you have any questions, you can call or email me.

Thank you for your cooperation.

Respectfully,

Landon Ochoa
Planner
Planning Division
Development Services
O. 432-685-7405
ljochoa@midlandtexas.gov

300 N. Loraine | P.O. Box 1152 | Midland, TX 79702

CAUTION: This email originated from outside your organization — exercise caution when opening attachments or clicking links, especially from unknown senders.


STOP


AREX
BAT


ALON



City Council Meeting

Item Number: 15

Meeting Date: June 27, 2023, July 11, 2023

To: City Council / City Manager

From: Alexandra Walling, Senior Planner

Subject: AN ORDINANCE AMENDING THE ZONING DISTRICT MAP OF THE CITY OF MIDLAND TO REZONE LOT 2E, BLOCK 33, NORTHGATE ADDITION, SECTION 21, CORRECTION PLAT, CITY AND COUNTY OF MIDLAND, TEXAS, FROM PD, PLANNED DEVELOPMENT DISTRICT FOR A SHOPPING CENTER TO AN AMENDED PD, PLANNED DEVELOPMENT DISTRICT FOR A SHOPPING CENTER (GENERALLY LOCATED AT THE NORTHEAST CORNER OF NORTHCREST DRIVE AND WEST LOOP 250 NORTH); CONTAINING A CUMULATIVE CLAUSE; CONTAINING A SAVINGS AND SEVERABILITY CLAUSE; PROVIDING FOR A MAXIMUM PENALTY OR FINE OF TWO THOUSAND DOLLARS ($2,000.00); AND ORDERING PUBLICATION (DISTRICT 1) (DEVELOPMENT SERVICES)

Purpose:

The applicant, Yelena Fiester, is requesting a Zone Change from PD, Planned Development District for a Shopping Center to an amended PD, Planned Development District for a Shopping Center to amend the adopted site plan for the addition of a cooler and new parking.

Recommended City Council Action:

Approve.

Fiscal Impact:

No City funds would be required for this project.

Current Zoning:

PD, Planned Development District for a Shopping Center with a base zoning RR, Regional Retail District (Ordinance 9725).

Surrounding Zoning and Land Use:

The property to the north is zoned PD, Planned District for a Shopping Center (Ordinance No. 7844) and the location of a retail store. The property to the east is zoned PD, Planned District for a Shopping Center (Ordinance No. 7844) and the location of a restaurant. The properties to the south are zoned PD, Planned District for a Shopping Center and the location of restaurants and retail stores (Ordinance No. 7664). The property to the west is zoned MF-16, Multiple-Family Dwelling District, and the location of apartments.

Analysis:

The property is located at 4512 West Loop 250 North Frontage Road and is currently the location of Texas Roadhouse. The applicant is requesting the addition of a ±120 sq. ft. exterior cooler to be attached to the north side of the main building, additional parking on the west side of the restaurant for 99 spaces, and one new disabled parking space on the north side of the restaurant as illustrated on Exhibit "A.". The applicant's original site plan satisfies parking requirements, and the additional 99 spaces (total of 224) will provide additional parking for the restaurant. The additional parking area to the west is contingent on approval by Engineering Services at the site plan stage as it is located within a storm drainage easement.

The proposed Zone Change has been circulated to the respective City departments for internal review and their comments, conditions, and requirements are as follows:

Fire: (Approved)

No comments or objections.

Building: (Approved)

No issues. All future structures must adhere to the 2018 International Building Codes, the 2015 International Energy Code, the 2020 NEC requirements, the 2015 International Fire Codes, local city ordinances, zoning requirements, established setbacks, oil and gas considerations, and floodplain requirements if necessary. Code versions are subject to change depending on time of new code edition adoption in the City of Midland and date of permit application.

Engineering (Approved):

No objection to zone change. [For the Applicant's information only.]

Site drainage, utilities, driveway access, and traffic circulation may be adjusted during construction drawing review as necessary to receive building permit approval from Engineering and Traffic Operations. [For the Applicant's information only.]

Code: (Approved)

No Oil and Gas issues.

Transportation: (Approved)

Site drainage, utilities, driveway access, and traffic circulation may be adjusted during construction drawing review as necessary to receive building permit approval from Engineering and Traffic Operations. [For the Applicant's information only.]
No objection to zone change. [For the Applicant's information only.]

Planning:

The request fits with the Tall City Tomorrow Comprehensive Plan, Chapter 3-Land Use Vision. The land use map indicates that this area shall be used for CC, Community Commercial developments which include a broad range of retail uses such as Texas Roadhouse. The current PD includes a base zoning of RR, Regional Retail which allows the restaurant to be consistent with the Tall City Plan.

The proposed PD zone change will allow for alterations to the previously adopted Site Plan, which includes the exterior cooler and parking additions. These alterations cannot be changed without an amendment to the PD.

Staff recommends approval of this Zone Change from PD, Planned Development District for a Shopping Center, to Amended PD, Planned Development District for a Shopping Center, subject to condition A.

Condition(s):

A. **That the use and development of the property shall significantly conform to the site plan attached hereto as Exhibit "A".**

Letters of Objection:

Staff has not received any letters of objection as of June 15, 2023.

Attachments:

Application
Site Plan (Exhibit A)
Maps

Morris William Jr.

City Manager's Office

ORDINANCE NO. _____

AN ORDINANCE AMENDING THE ZONING DISTRICT MAP OF THE CITY OF MIDLAND TO REZONE LOT 2E, BLOCK 33, NORTHGATE ADDITION, SECTION 21, CORRECTION PLAT, CITY AND COUNTY OF MIDLAND, TEXAS, FROM PD, PLANNED DEVELOPMENT DISTRICT FOR A SHOPPING CENTER TO AN AMENDED PD, PLANNED DEVELOPMENT DISTRICT FOR A SHOPPING CENTER (GENERALLY LOCATED AT THE NORTHEAST CORNER OF NORTHCREST DRIVE AND WEST LOOP 250 NORTH); CONTAINING A CUMULATIVE CLAUSE; CONTAINING A SAVINGS AND SEVERABILITY CLAUSE; PROVIDING FOR A MAXIMUM PENALTY OR FINE OF TWO THOUSAND DOLLARS ($2,000.00); AND ORDERING PUBLICATION

WHEREAS, the City Planning and Zoning Commission and the Governing Body of the City of Midland, in compliance with the City Charter, the City Code, and State law, have given the requisite notices by United States mail, publication and otherwise; and after a full and fair hearing to all of the property owners generally and particularly to those interested persons situated in the affected area and in the vicinity thereof, the Governing Body finds that the public health, safety and general welfare will be best served by rezoning Lot 2E, Block 33, Northgate Addition, Section 21, Correction Plat, City and County of Midland, Texas (the "Property") to an amended PD, Planned Development District for a Shopping Center and adopting a site plan therefor, as set out hereinafter;

NOW, THEREFORE, BE IT ORDAINED BY THE CITY COUNCIL OF THE CITY OF MIDLAND, TEXAS:

SECTION ONE. That the Zoning District Map of the City of Midland, Texas, is hereby amended to rezone the Property from PD, Planned Development District for a Shopping Center to an amended PD, Planned Development District for a Shopping Center.

SECTION TWO. That the base zoning district to which the use and development of the Property shall conform, except as modified by Section Three of this ordinance, is the RR, Regional Retail District.

SECTION THREE. That a site plan, which is attached hereto as Exhibit "A" and

incorporated herein for all purposes, is hereby adopted, and the use and development of the Property shall be subject to the following conditions and restrictions:

That the Property shall significantly conform to the site plan attached hereto as Exhibit "A".

SECTION FOUR. That the definitions given in the zoning regulations contained in the City Code of the City of Midland, Texas, shall be applicable to such of those terms as are used herein.

SECTION FIVE. The provisions of this ordinance are to be cumulative of all other ordinances or parts of ordinances governing or regulating the same subject matter as that covered herein; provided, however, that all prior ordinances or parts of ordinances inconsistent with or in conflict with any of the provisions of this ordinance are hereby expressly repealed to the extent of any such inconsistency or conflict.

SECTION SIX. If any section, subsection, sentence, clause or phrase of this ordinance is, for any reason, held to be unconstitutional or invalid, such holding shall not affect the validity of the remaining portions of this ordinance. The Council of the City of Midland hereby declares that it would have passed this ordinance and each section, subsection, sentence, clause, or phrase hereof irrespective of the fact that any one or more sections, subsections, sentences, clauses, or phrases be declared unconstitutional or invalid.

SECTION SEVEN. The penalty for violation of this ordinance shall be in accordance with the general penalty provisions contained in Section 1-3-1 of the City Code of Midland, Texas, which provides for a fine not exceeding two thousand dollars ($2,000.00).

SECTION EIGHT. The City Secretary is hereby authorized and directed to publish the descriptive caption of this ordinance in the manner and for the length of time prescribed by the law as an alternative method of publication.

The above and foregoing ordinance was duly proposed, read in full and adopted on

first reading, the _____ day of _____, A.D., 2023; and passed to second reading on motion of Council member _____, seconded by Council member _____, by the following vote:

Council members voting "AYE":

Council members voting "NAY":

The above and foregoing ordinance was read in full and finally adopted by the following vote upon motion of Council member _____, seconded by Council member _____, on the _____ day of _____, A.D., 2023, at a regular meeting of the City Council:

Council members voting "AYE":

Council members voting "NAY":

PASSED AND APPROVED THIS _____ day of _____, A.D., 2023.

_____
Lori Merritt Blong, Mayor

ATTEST:

_____
Marcia Bentley-German, City Secretary

APPROVED AS TO CONTENT
AND COMPLETENESS:

_____
Charles Harrington, Director of Development Services

APPROVED ONLY AS TO FORM:

_____
John Ohnemiller, City Attorney

PROJECT INFORMATION:

SITE AREA:	±2.96 ACRES
ZONED:	PD
PARKING REQUIRED:	N/A
PARKING PROVIDED:	99 STALLS PROPOSED INCLUDING 1 ADDITIONAL ADA STALL 224 STALLS TOTAL INCLUDING 7 ADA STALLS

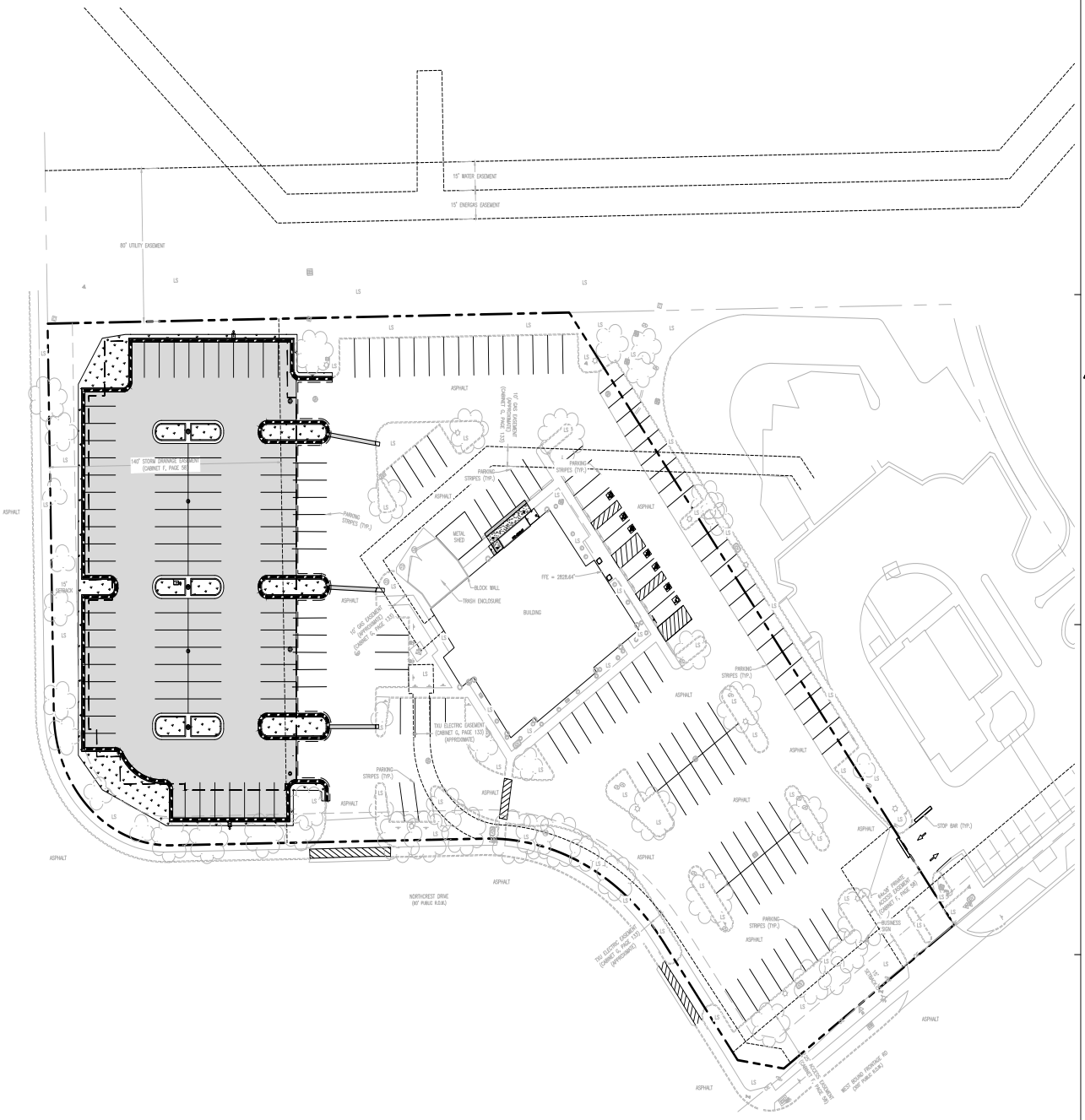

CALL BEFORE YOU DIG
1-800-344-8377
TEXAS ONE CALL SYSTEM

PACKET

GRAPHIC SCALE

30 0 15 30 60 120

(IN FEET)
1 inch = 30 ft.

15.8
EXHIBIT "A"

July 11, 2023

www.greenbergfarrow.com
8600 W Bryn Mawr Ave.
Suite 800N
Chicago, IL 60631

COPYRIGHT NOTICE
This drawing is the property of the above referenced Professional and is not to be used for any purpose other than the specific project and site names herein, and cannot be reproduced in any manner without the express written permission from the Professional.

PROJECT TEAM

CIVIL
GRRENBERGFARROW

STRUCTURAL
GRRENBERGFARROW

MECHANICAL
GRRENBERGFARROW

PLUMBING
GRRENBERGFARROW

ELECTRICAL
GRRENBERGFARROW

KITCHEN EQUIPMENT & FIXTURE
TEXAS ROADHOUSE

ISSUE/REVISION RECORD

DATE	DESCRIPTION
05/09/23	PERMIT/ BID SET
1 05/22/23	RESUBMITTAL

PROFESSIONAL SEAL

PROFESSIONAL LICENSE NO:
138007

PROFESSIONAL IN CHARGE
JEFF RATH

PROJECT MANAGER
J. RATH

QUALITY CONTROL
J. RATH

DRAWN BY
PEP

PROJECT NAME

TEXAS ROADHOUSE

4512 LOOP 250 FRONTAGE RD
MIDLAND
TEXAS
79707

PROJECT NUMBER
20211006.0

SHEET TITLE

OVERALL SITE PLAN

SHEET NUMBER

C3.0 1

Drawing Name: P:\2021\20211006\000 Civil_Current Drawings\20211006.0_MASTER.dwg Last Modified: Jun 13, 2023 - 2:04pm Plotted on: Jun 13, 2023 - 2:04pm by pjohnne

MIDLAND Planning Division

Zone Change/Planned District Amendment/~~Site Plan Approval~~

Project Number: Z-23-0335

Case Number:

Applicant *(if acting as Agent, see affidavit on page 2)* Printed Name: Yelena Fiester		Phone (682) 552-1572 Email yfiester@greenbergfarrow.com	
Address 601 Sante Fe Dr	City Lewisville	State TX	Zip 75077

Property Owner Printed Name: Roadhouse Holdings of TX LTD		Phone (502) 855-5556 Email caitlin.kicaid@texasroadhouse.com	
Address 6040 Dutchmans lane Ste #400	City Louisville	State KY	Zip 40205

Representative *(if different from Applicant or Property Owner)* Firm: GreenbergFarrow Printed Name: Yelena Fiester		Phone ( ) Email	
Address	City	State	Zip

Street Address: 4512 W Loop 250 N Frontage Rd., Midland TX

Legal Description
Lot: 02E Block: 033 Subdivision: Northgate, Section 21 (correction plat)

Current Zoning: PD - case #Z-93-022

Proposed Zone: Same - no change
(List by tracts if more than one district is requested)

Reason for Zone Change Request:
No zone change request. Submit a revised site plan for approval.

Proposed revisions: adding 120 SF cooler at the rear of restaurant and converting the existing on-site detention to underground detention. That will allow to use that space for additional parking.

Present Use of Property: Restaurant

Proposed Use of Property: Restaurant

How would this zone change affect the public health, safety and welfare? No impact

Describe how conditions affecting the property have changed since present zoning designation: No zone change. Submitting for site plan amendment due to the exterior cooler addition and parking lot addition.

Submittal and Fees
Items to be submitted with this application form:

- Application Fee – Payable to the 'City of Midland'
- Dimensioned Site Plan
- Digital Copies of Site Plan (PDF/JPEG)

Signature *(by property owner only – authorized agent must sign affidavit below)*	
Applicant (signature):	Date05/10/2023
Applicant (printed): Yelena Fiester	
Property Owner (signature): Caitlin Kincaid	Date: 05/10/2023
Property Owner (printed) : Caitlin Kincaid	

The Zone Change/Planned District Amendment/Site Plan Approval shall be considered officially received in the Planning office only when it has been submitted in full compliance with the provisions of Section 212 of the Texas Local Government Code and the Zoning Code of Ordinances of the City of Midland and when such required items for the application are also received.

All materials, including exhibits, submitted in support of an application, or displayed during a public hearing, shall remain the property of the City of Midland.

STATE OF TEXAS
COUNTY OF MIDLAND

Before me, the undersigned authority, on this day personally appear Yelena Fiester who, being by me duly sworn, upon oath says: That (s)he is the owner of _____ or authorized by Roadhouse Holdings the owner of the above described property, to fully represent him/her in this application and that (s)he had the legal right, power and authority to sign said owner's name hereto as his/her attorney in fact.

Authorized Agent (*signature*)

Subscribed and sworn to before me, this 10 day of May, 2023, to certify which witness my hand and seal of office.

RYKAH YOUNG
Notary Public, State of Texas
Comm. Expires 09-24-2025
Notary ID 133353146

NOTARY PUBLIC, MIDLAND COUNTY, TEXAS

FOR OFFICE USE ONLY

☐ Property Owner Authorization	☐ Dimensioned Site Plan
☐ Application Fee	☐ Plans in Digital Format (PDF/JPEG)
Check #_____	
Received By:	Date:

****Application will not be considered for scheduling until reviewed by a planner.****

PROJECT INFORMATION:

SITE AREA:	±2.96 ACRES
ZONED:	PD
PARKING REQUIRED:	N/A
PARKING PROVIDED:	99 STALLS PROPOSED INCLUDING 1 ADDITIONAL ADA STALL 224 STALLS TOTAL INCLUDING 7 ADA STALLS

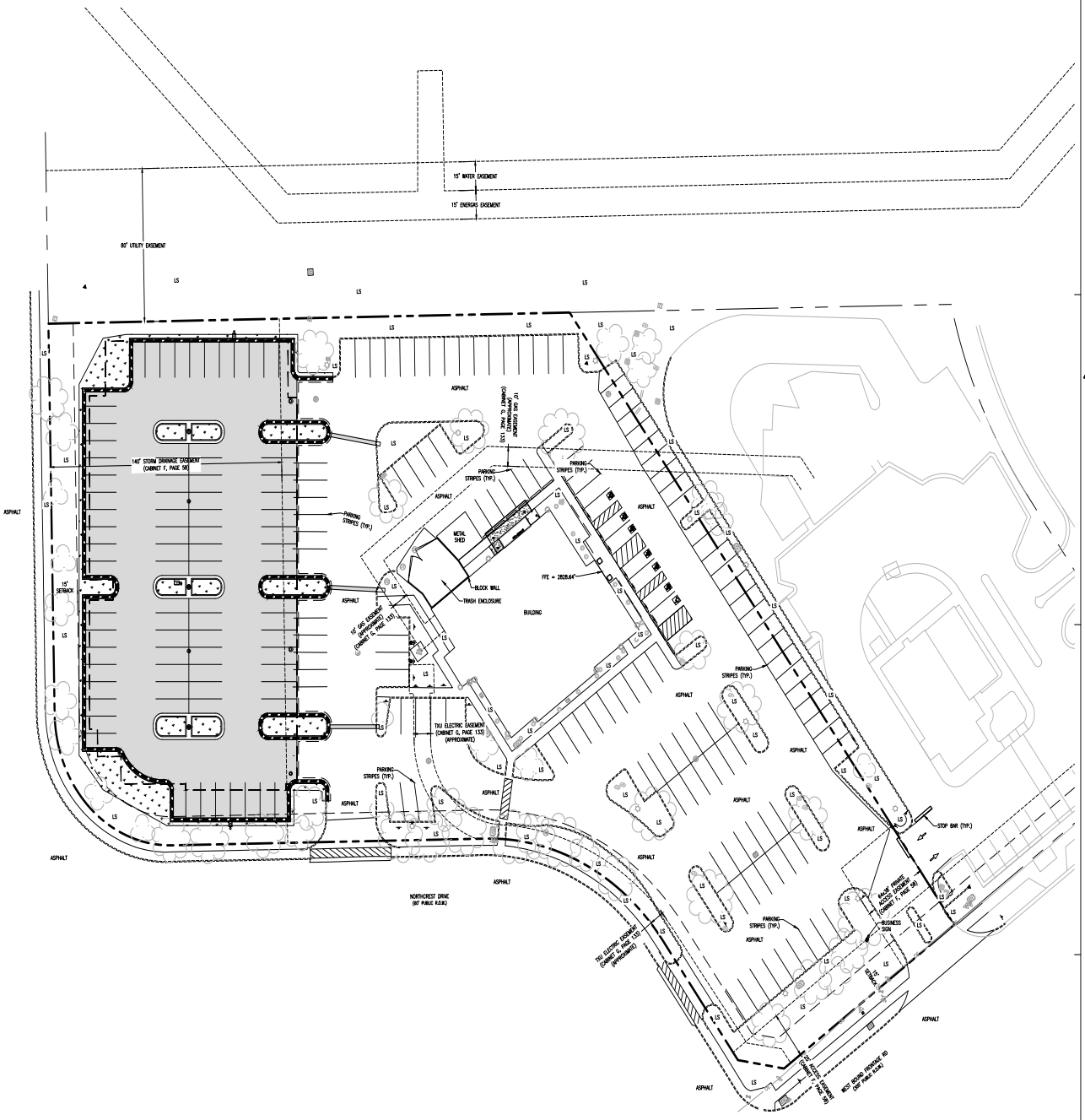

CALL BEFORE YOU DIG 1-800-344-8377 TEXAS ONE CALL SYSTEM

PACKET

GRAPHIC SCALE

30 0 15 30 60 120

(IN FEET)

1 inch = 30 ft.

15.11

July 11, 2023

www.greenbergfarrow.com
8600 W Bryn Mawr Ave.
Suite 800N
Chicago, IL 60631

COPYRIGHT NOTICE
This drawing is the property of the above referenced Professional and is not to be used for any purpose other than the specific project and site names herein, and cannot be reproduced in any manner without the express written permission from the Professional.

PROJECT TEAM

CIVIL
GRRENBERGFARROW

STRUCTURAL
GRRENBERGFARROW

MECHANICAL
GRRENBERGFARROW

PLUMBING
GRRENBERGFARROW

ELECTRICAL
GRRENBERGFARROW

KITCHEN EQUIPMENT & FIXTURE
TEXAS ROADHOUSE

ISSUE/REVISION RECORD

DATE	DESCRIPTION
05/09/23	PERMIT/ BID SET
1 05/22/23	RESUBMITTAL

PROFESSIONAL SEAL

STATE OF TEXAS
JEFFREY M. RATH
138007
LICENSED PROFESSIONAL ENGINEER

PROFESSIONAL LICENSE NO:
138007

PROFESSIONAL IN CHARGE
JEFF RATH

PROJECT MANAGER
J. RATH

QUALITY CONTROL
J. RATH

DRAWN BY
PEP

PROJECT NAME

TEXAS ROADHOUSE

4512 LOOP 250 FRONTAGE RD
MIDLAND
TEXAS
79707

PROJECT NUMBER
20211006.0

SHEET TITLE

OVERALL SITE PLAN

SHEET NUMBER

C3.0 1

Drawing Name: P:\2021\20211006\000 Civil_Current Drawings\20211006.0_MASTER.dwg Last Modified: Jun 13, 2023 - 2:04pm Plotted on: Jun 13, 2023 - 2:04pm by pjdenne

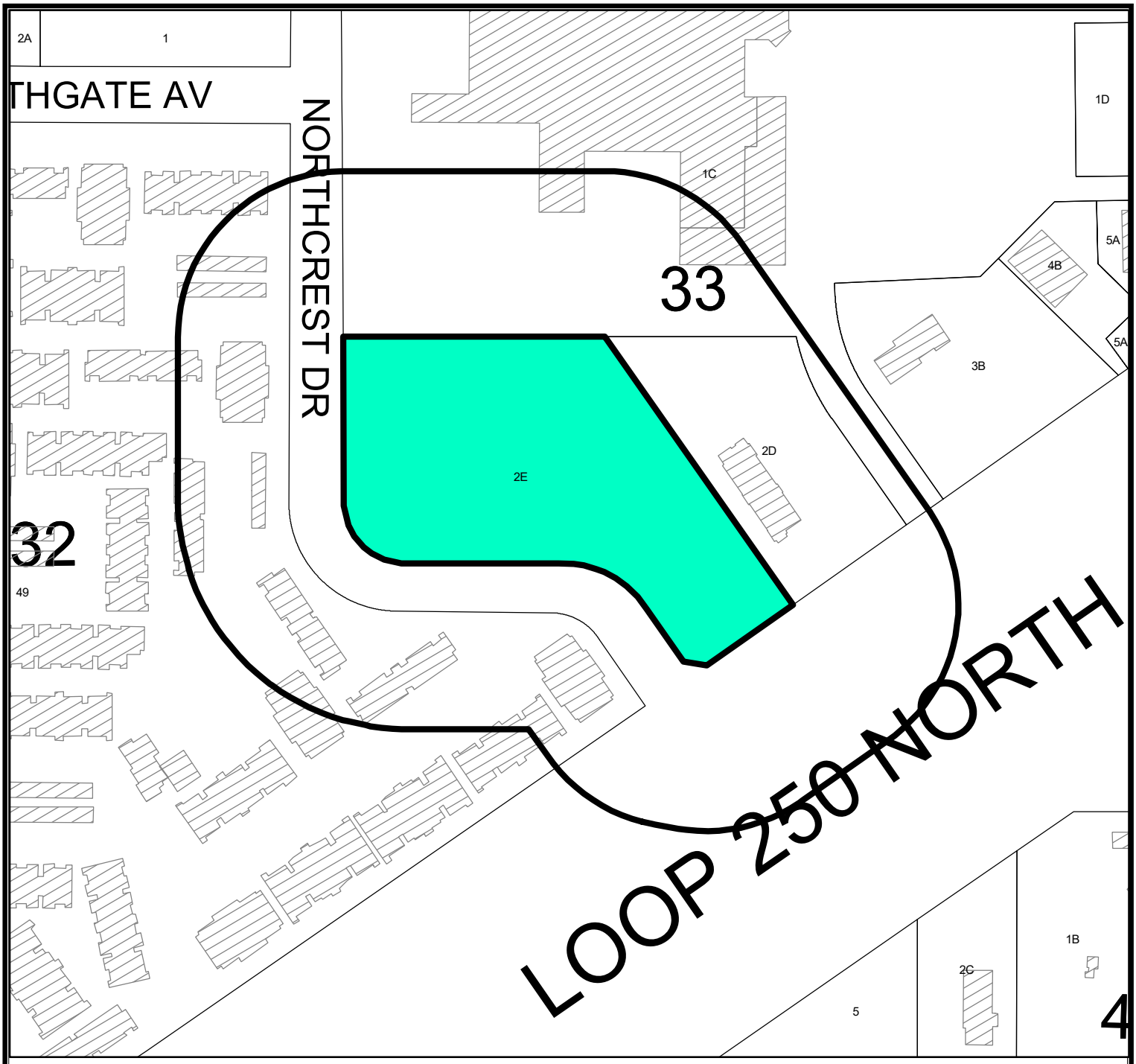

LOCATION MAP

Z-23-0335 **Scale: 1" = 200'**

Consider a request by Roadhouse Holdings of Texas, Ltd. for a zone change from PD, Planned Development District for a Shopping Center to an Amended PD, Planned Development District for a Shopping Center, on Lot 2E, Block 33, Northgate Addition, Section 21 (Correction Plat), City and County of Midland, Texas.

Generally located on the northeast corner of Northcrest Drive and West Loop 250 North. - (Council District 1)

PACKET 15.12

LEGEND

- CITY LIMITS
- PARCEL
- PRIVATE BLDGS

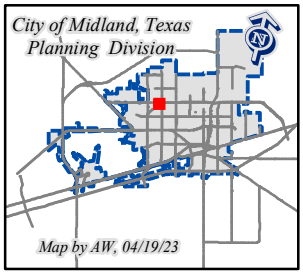

©THE CITY OF MIDLAND - 2021
THIS DATA IS NOT A SUBSTITUTION FOR A SURVEY NOR IS IT DESIGNED TO BE USED AS THE ONLY TOOL IN PERMITTING OR OTHER DECISIONS BASED SOLELY ON THE INFORMATION CONTAINED HEREIN.
THE CITY OF MIDLAND SHALL NOT BE RESPONSIBLE FOR ANY DECISIONS BASED UPON THE USE OF THIS DATA.

July 11, 2023

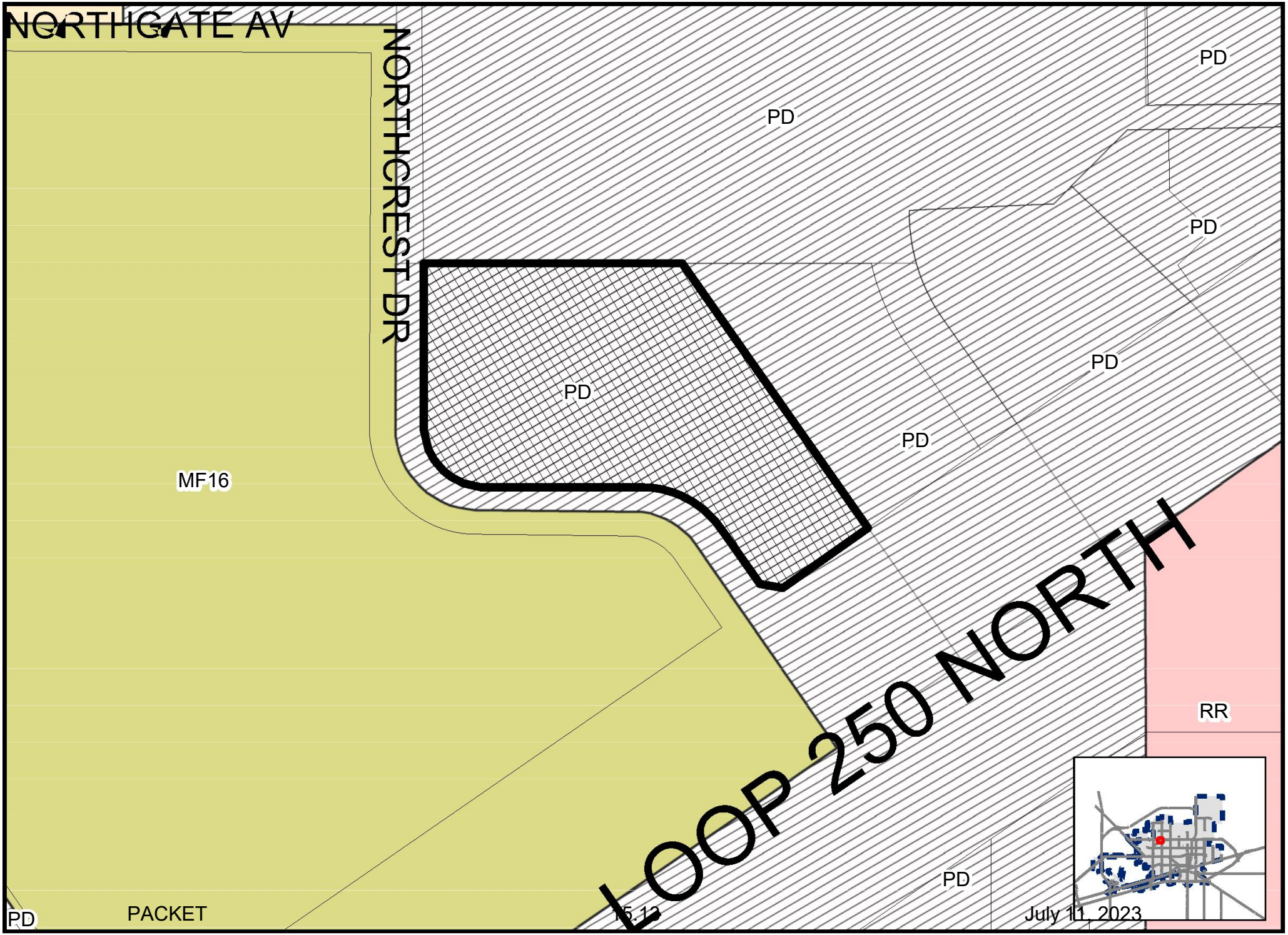

Map By AW, 4/19/23

Z-23-0327

Scale: 1" = 200'

ZONING MAP


TEXAS roadhouse
WOW your MOM




TEXAS
KMK-3449
KRD-4632



City Council Meeting

Item Number: 16

Meeting Date: June 27, 2023, July 11, 2023

To: City Council / City Manager

From: Alexandra Walling, Senior Planner

SUBJECT: **AN ORDINANCE VACATING AND ABANDONING A 0.03-ACRE PORTION OF MADISON STREET RIGHT-OF-WAY AND A 0.03-ACRE PORTION OF CARVER STREET RIGHT-OF-WAY, BOTH LOCATED ADJACENT TO BLOCK 9, EAST MIDLAND ADDITION, CITY AND COUNTY OF MIDLAND, TEXAS (GENERALLY LOCATED AT THE SOUTHEAST CORNER OF THE INTERSECTION OF GARDEN LANE AND MADISON STREET AND AT THE SOUTHWEST CORNER OF THE INTERSECTION OF GARDEN LANE AND CARVER STREET); ADOPTING THE APPRAISAL BY THE CITY MANAGER OF $5,227.20; RETAINING A NONEXCLUSIVE UTILITY EASEMENT; AND ORDERING RECORDATION BY THE CITY SECRETARY (DISTRICT 2) (DEVELOPMENT SERVICES)**

Purpose:

The applicant, Schumann Engineering, is requesting to vacate a 0.03-acre portion of Madison Street right-of-way and a 0.03-acre portion of Carver Street right-of-way, both located adjacent to Block 9, East Midland Addition, City and County of Midland, Texas, for ownership purposes.

Recommended Planning and Zoning Commission Action:

☒ Approve ☐ Deny ☐ Direction/Informational

Fiscal Impact:

The 2023 appraised value of the right-of-way is $2.00 per square foot, for a total value of $5227.20.

Discussion:

The approximated area that will be vacated is 2,613-square feet (0.06-acres). The applicant is requesting to vacate for future development.

This request has been circulated and reviewed by all pertinent City departments and franchise utility companies. Their comments, conditions, and requests are as follows:

Code Compliance: (Approved)

No Oil and Gas issues.

Building Code: (Approved)

No objections.

Engineering: (Approved)

No objections to vacation. Applicant shall be responsible for relocating any utilities, if existing, or providing easements as needed. [For Applicant's Information Only.]

Fire: (Approved)

No objections.

Transportation: (Approved)

No objections to vacation. Applicant shall be responsible for relocating any utilities, if existing, or providing easements as needed.

GIS: (Approved)

No comments.

AT&T: (Approved with conditions)

We have fiber on the power poles that is going across where the easement vacation is requested. We are okay with the vacation if there is a utility easement.

Atmos: (Approved with Conditions)

Atmos Energy currently has facilities located within the above-described Right of Way along the West side of Carver street. We currently have two gas lines that extend along a portion of the proposed vacate area. Atmos would have no objection to vacation of the referenced area if our facilities are within a designated utility easement.

Astound: (Approved)

After looking at our maps it does not seem that we have any services in the highlighted sections that you have marked per your map.

Oncor: (Approved)

Oncor Electric Delivery has no objection to the vacation of the above referenced road vacancy of East 10' of N Madison St in the East Midland Addition in the City & County of Midland, TX. Oncor Electric Delivery has no objection to the road vacancy of West 10' of N Carver St with the exception of 30ft in length by 10ft in width at South end of proposed road vacancy. Oncor Electric has overhead facilities located in the dedicated right of way as noted on the attached drawing and plat that will remain in dedicated right of way.

Altice: (Approved with Conditions)

Optimum, has aerial coax plant in the alley & the ROW west of Carver St. We cannot vacate unless the requestor's pay for relocating our plant. As long as it stays aerial we will be okay, if they want us to go underground, they will need to pay to relocate.

Midland Central Appraisal District: (Approved)

The vacation area indicated has a current value of $2.00 per square foot or $5227.20.

Planning:

Pertinent City departments and franchise utility companies have reviewed this vacation request and have approved the request.

Therefore, staff recommends approval of the vacation of a 0.03-acre portion of Madison Street right-of-way and a 0.03-acre portion of Carver Street right-of-way, both located adjacent to Block 9, East Midland Addition, City and County of Midland, Texas, for future development to be subject to conditions A through C.

Conditions:

A. **That the City of Midland has received from the property owner the sum of $5227.20.**

B. **That a replat of the subject property is approved by the City of Midland and filed and recorded with the County Clerk of Midland County.**

C. **That an accessible nonexclusive utility easement is retained.**

Letters of Objection:

As of June 15, 2023, staff has not received any letters of objection to this request.

Attachments:

Vacation Survey (Exhibit A)
Application
Maps
Responses from Franchise Utility Companies and Midland Central Appraisal District

Morris Williams Jr.

City Manager's Office

ORDINANCE NO. _____

AN ORDINANCE VACATING AND ABANDONING A 0.03-ACRE PORTION OF MADISON STREET RIGHT-OF-WAY AND A 0.03-ACRE PORTION OF CARVER STREET RIGHT-OF-WAY, BOTH LOCATED ADJACENT TO BLOCK 9, EAST MIDLAND ADDITION, CITY AND COUNTY OF MIDLAND, TEXAS (GENERALLY LOCATED AT THE SOUTHEAST CORNER OF THE INTERSECTION OF GARDEN LANE AND MADISON STREET AND AT THE SOUTHWEST CORNER OF THE INTERSECTION OF GARDEN LANE AND CARVER STREET); ADOPTING THE APPRAISAL BY THE CITY MANAGER OF $5,227.20; RETAINING A NONEXCLUSIVE UTILITY EASEMENT; AND ORDERING RECORDATION BY THE CITY SECRETARY

WHEREAS, it has been determined by the Midland City Council that a 0.03-acre portion of Madison Street right-of-way and a 0.03-acre portion of Carver Street right-of-way, both located adjacent to Block 9, East Midland Addition, City and County of Midland, Texas, as described in Exhibit "A" attached hereto and made a part hereof for all legal purposes (the "Property"), is no longer needed for public use; and

WHEREAS, Section 272.001 of the Texas Local Government Code provides that a political subdivision may not convey, sell, or exchange its interest in land without observing notice and bid requirements, unless the conveyance is to one or more abutting property owners; and

WHEREAS, an application for vacating the Property has been received by the City from the abutting property owner; and

WHEREAS, the City Manager has appraised the value of the City's property interest in the Property at $5,227.20, as shown in Exhibit "B" attached hereto and incorporated herein by reference; and

WHEREAS, the Council finds it to be in the public interest to abandon and vacate the Property;

NOW, THEREFORE, BE IT ORDAINED BY THE CITY COUNCIL OF THE CITY OF MIDLAND, TEXAS:

SECTION ONE. That the Property is hereby vacated and abandoned for all public purposes. Provided, however, that the City is hereby abandoning only the public interest in the Property, and this ordinance in no way affects any private easement or access easement which abutting property owners may have in the Property.

SECTION TWO. That this ordinance shall not be effective until:

A. the City of Midland has received from the abutting property owner(s) the sum of $5,227.20; and

B. a replat of the Property is approved by the City of Midland and filed and recorded with the County Clerk of Midland County, Texas.

SECTION THREE. That the City herein retains an accessible nonexclusive utility easement across, through, over, under, on and along the Property until all entities that were using the Property for utility purposes as of the date of approval of this ordinance have abandoned their uses of the Property.

SECTION FOUR. That upon the City's receipt of the sum set forth in Section Two hereof, the City Secretary is hereby authorized and directed to file a certified copy of this ordinance with the County Clerk of Midland County, Texas, for purposes of recording in the Official Records of Midland County, Texas.

The above and foregoing ordinance was duly proposed, read in full and adopted on first reading, the _____ day of _____, A.D., 2023; and passed to second reading on motion of Council member _____, seconded by Council member _____, by the following vote:

Council members voting "AYE":

Council members voting "NAY":

The above and foregoing ordinance was read in full and finally adopted by the following vote upon motion of Council member _____, seconded by Council member _____, on the _____ day of _____, A.D., 2023, at a regular

meeting of the City Council:

Council members voting "AYE":

Council members voting "NAY":

PASSED AND APPROVED THIS _____ day of _____, A.D., 2023.

_____
Lori Merritt Blong, Mayor

ATTEST:

_____
Marcia Bentley-German, City Secretary

APPROVED AS TO CONTENT
AND COMPLETENESS:

_____
Charles Harrington, Director of Development Services

APPROVED ONLY AS TO FORM:

_____
John Ohnemiller, City Attorney

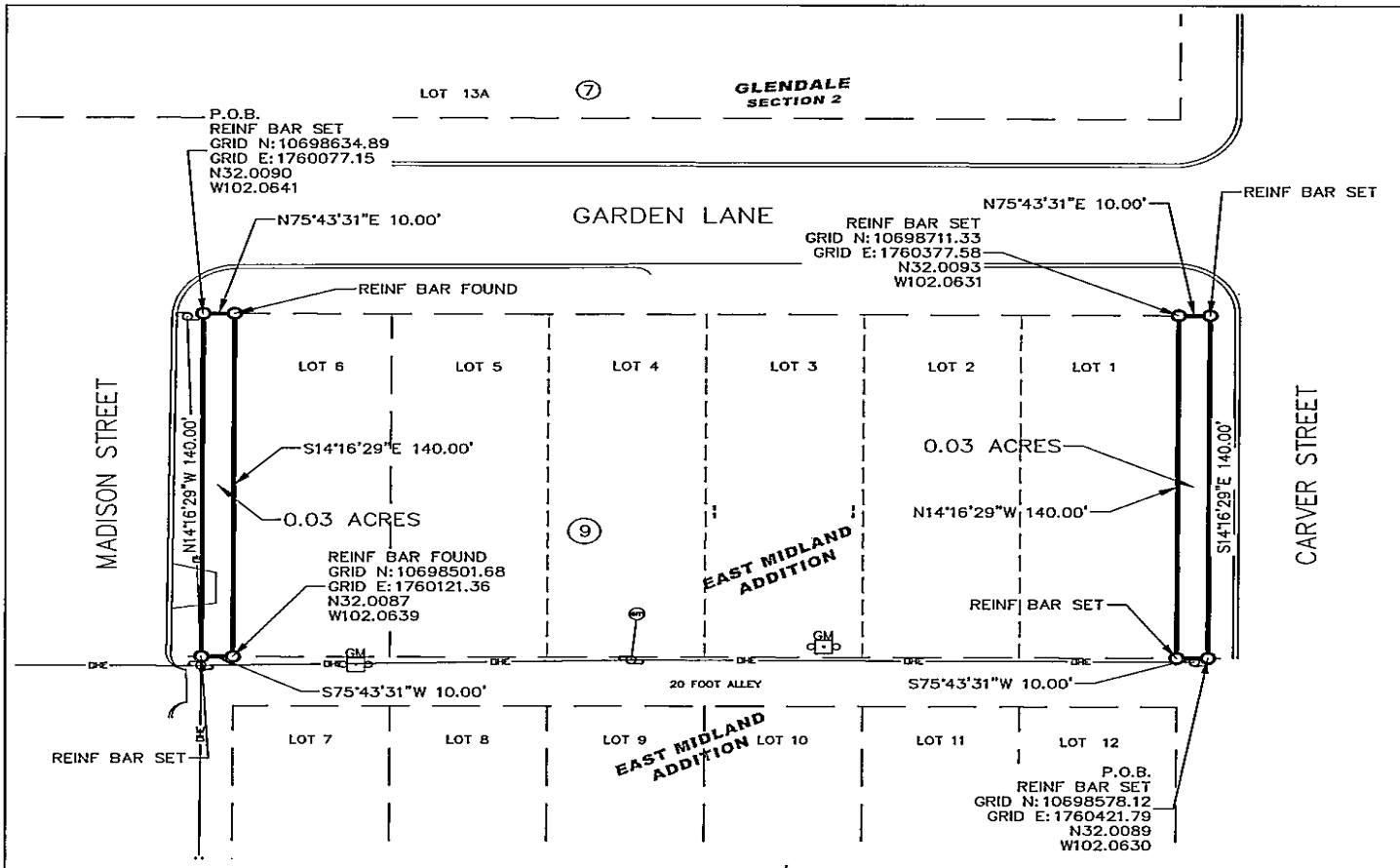

FIELD NOTE DESCRIPTION OF A 0.03 ACRE TRACT OF LAND, BEING THE EAST 10 FEET OF MADISON STREET IN, BLOCK 9 OF EAST MIDLAND ADDITION, AN ADDITION TO THE CITY OF MIDLAND, TEXAS AS PER THE MAP OR PLAT RECORDED IN VOLUME 1, PAGE 52. OF THE PLAT RECORDS OF MIDLAND COUNTY, TEXAS, SAID 0.03 ACRE TRACT DESCRIBED MORE FULLY BY METES AND BOUNDS AS FOLLOWS:

BEGINNING AT A REINF BAR SET (N: 10698634.89, E: 1760077.15) IN THE SOUTH RIGHT OF WAY OF GARDEN LANE AND THE NEW EAST RIGHT OF WAY OF MADISON STREET FOR THE NORTHWEST CORNER OF THIS TRACT, FROM WHICH THE NORTHWEST CORNER OF SAID BLOCK 9 BEARS NORTH 75°43'31" EAST 10.00 FEET;

THENCE NORTH 75°43'31" EAST, ALONG SAID SOUTH RIGHT OF WAY, 10.00 FEET TO A REINF BAR FOUND FOR THE NORTHEAST CORNER OF THIS TRACT;

THENCE SOUTH 14°16'29" EAST 140.00 FEET TO A REINF BAR FOUND FOR THE SOUTHEAST CORNER OF THIS TRACT;

THENCE SOUTH 75°43'31" WEST 10.00 FEET TO A REINF BAR SET IN THE NEW EAST RIGHT OF WAY OF SAID MADISON STREET FOR THE SOUTHWEST CORNER OF THIS TRACT;

THENCE NORTH 14°16'29" WEST, ALONG SAID NEW RIGHT OF WAY, 140.00 FEET TO THE PLACE OF BEGINNING.

BEARINGS AND DISTANCES SHOWN ARE BASED ON GPS OBSERVATIONS AND CONFORM TO THE "TEXAS COORDINATE SYSTEM" TEXAS CENTRAL ZONE, NORTH AMERICAN DATUM OF 1983.

LEGEND:

MONUMENT AS DESCRIBED

PROPERTY LINE

FIELD NOTE DESCRIPTION OF A 0.03 ACRE TRACT OF LAND, BEING THE WEST 10 FEET OF CARVER STREET IN, BLOCK 9 OF EAST MIDLAND ADDITION, AN ADDITION TO THE CITY OF MIDLAND, TEXAS AS PER THE MAP OR PLAT RECORDED IN VOLUME 1, PAGE 52. OF THE PLAT RECORDS OF MIDLAND COUNTY, TEXAS, SAID 0.03 ACRE TRACT DESCRIBED MORE FULLY BY METES AND BOUNDS AS FOLLOWS:

BEGINNING AT A REINF BAR SET (N: 10698578.12, E: 1760421.79) IN THE NEW EAST RIGHT OF WAY OF SAID CARVER STREET FOR THE SOUTHEAST CORNER OF THIS TRACT, FROM WHICH THE SOUTHEAST LOT 1 CORNER OF SAID BLOCK 9 BEARS SOUTH 75°43'31" WEST 10.00 FEET;

THENCE SOUTH 75°43'31" WEST 10.00 FEET TO A REINF BAR SET FOR THE SOUTHWEST CORNER OF THIS TRACT;

THENCE NORTH 14°16'29" WEST 140.00 FEET TO A REINF BAR SET IN THE SOUTH RIGHT OF WAY OF GARDEN LANE FOR THE NORTHWEST CORNER OF THIS TRACT;

THENCE NORTH 75°43'31" EAST, ALONG SAID SOUTH RIGHT OF WAY, 10.00 FEET TO A REINF BAR SET FOR THE NORTHEAST CORNER OF THIS TRACT;

THENCE SOUTH 14°16'29" EAST 140.00 FEET TO THE PLACE OF BEGINNING.

BEARINGS AND DISTANCES SHOWN ARE BASED ON GPS OBSERVATIONS AND CONFORM TO THE "TEXAS COORDINATE SYSTEM" TEXAS CENTRAL ZONE, NORTH AMERICAN DATUM OF 1983.

Surveyor Certification

TO THE LIENHOLDERS, DAVID DIAZ

(OWNER) OF THE PREMISES AND TO THE ISSUING TITLE INSURANCE UNDERWRITER: THE UNDERSIGNED DOES HEREBY CERTIFY THAT THIS SURVEY WAS MADE ON THE GROUND OF THE PROPERTY LEGALLY DESCRIBED HEREON AND THAT THERE ARE NO KNOWN DISCREPANCIES, CONFLICTS, SHORTAGES IN AREA, BOUNDARY LINE CONFLICTS, ENCROACHMENTS, OVERLAPPING OF IMPROVEMENTS, EASEMENTS OR RIGHTS-OF-WAY, EXCEPT AS SHOWN HEREON.

DATED THIS 25TH DAY OF JANUARY, 2023

STATE OF TEXAS
REGISTERED
RJ DAUM
4826
PROFESSIONAL
LAND SURVEYOR

RJ DAUM
TEXAS RPLS 4826

SURVEY

BEING A ROAD VACANCY
OF THE EAST 10' OF MADISON STREET
AND THE WEST 10' OF CARVER STREET
IN THE
EAST MIDLAND ADDITION, BLOCK 9,
AN ADDITION TO THE CITY OF
MIDLAND, TEXAS, AS PER THE MAP OR
PLAT RECORDED IN VOLUME 1, PAGE 52
OF THE PLAT RECORDS OF

MIDLAND COUNTY, TEXAS

July 11, 2023

PROJECT: 78496

SCALE: 1" = 60'

JOB NO.: 78,496-ROAD

SCHUMANN
A LATERAL LAND COMPANY
LAND SURVEYING
TEXAS FIRM No. 10149500
800 N. MARIENFELD STREET
SUITE 100
MIDLAND, TEXAS 79701
Office (432) 684-5548

EXHIBIT "A"

MIDLAND
Feel the Energy!

Office of the City Manager

June 15, 2023

Midland City Council
City of Midland, Texas

RE: Request for vacation of a 0.03-acre portion of Madison Street right-of-way and a 0.03-acre portion of Carver Street right-of-way, both located adjacent to Block 9, East Midland Addition, City and County of Midland, Texas

Dear Members of the City Council:

The above-referenced property has been appraised in accordance with Chapter 272 of the Texas Local Government Code. The fair market value of the property is $5,227.20. Upon the City's receipt of this sum from the adjoining property owner(s), the ordinance vacating and abandoning the City's interest in the property may be recorded in the Midland County Clerk's office.

Very truly yours,

Morris Williams Jr.

Morris Williams, Jr.
Interim City Manager

EXHIBIT "B"

300 N. Loraine, Midland TX 79701 • 432-685-7202 • Fax 432-686-1600

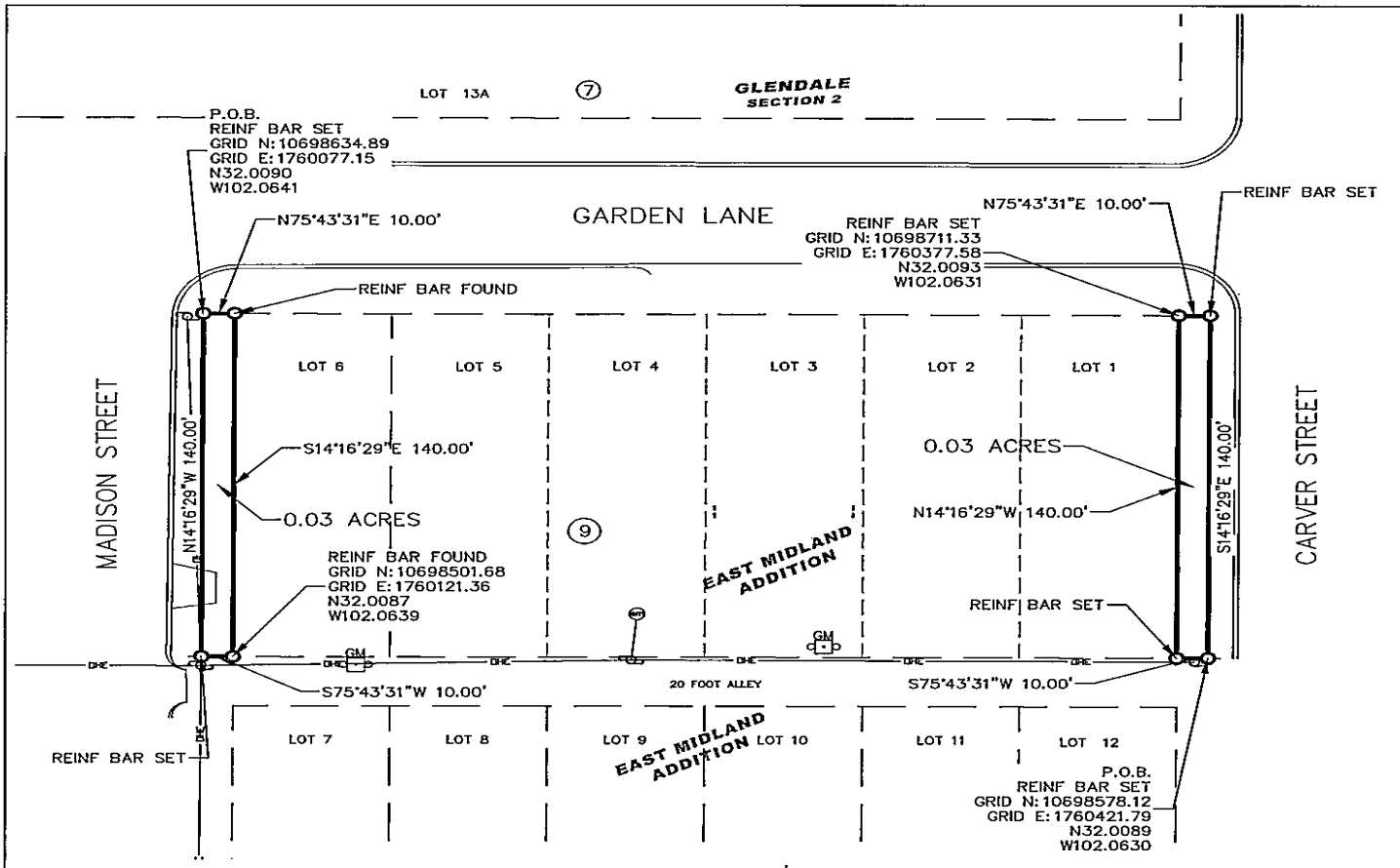

FIELD NOTE DESCRIPTION OF A 0.03 ACRE TRACT OF LAND, BEING THE EAST 10 FEET OF MADISON STREET IN, BLOCK 9 OF EAST MIDLAND ADDITION, AN ADDITION TO THE CITY OF MIDLAND, TEXAS AS PER THE MAP OR PLAT RECORDED IN VOLUME 1, PAGE 52. OF THE PLAT RECORDS OF MIDLAND COUNTY, TEXAS, SAID 0.03 ACRE TRACT DESCRIBED MORE FULLY BY METES AND BOUNDS AS FOLLOWS:

BEGINNING AT A REINF BAR SET (N:10698634.89, E:1760077.15) IN THE SOUTH RIGHT OF WAY OF GARDEN LANE AND THE NEW EAST RIGHT OF WAY OF MADISON STREET FOR THE NORTHWEST CORNER OF THIS TRACT, FROM WHICH THE NORTHWEST CORNER OF SAID BLOCK 9 BEARS NORTH 75°43'31" EAST 10.00 FEET;

THENCE NORTH 75°43'31" EAST, ALONG SAID SOUTH RIGHT OF WAY, 10.00 FEET TO A REINF BAR FOUND FOR THE NORTHEAST CORNER OF THIS TRACT;

THENCE SOUTH 14°16'29" EAST 140.00 FEET TO A REINF BAR FOUND FOR THE SOUTHEAST CORNER OF THIS TRACT;

THENCE SOUTH 75°43'31" WEST 10.00 FEET TO A REINF BAR SET IN THE NEW EAST RIGHT OF WAY OF SAID MADISON STREET FOR THE SOUTHWEST CORNER OF THIS TRACT;

THENCE NORTH 14°16'29" WEST, ALONG SAID NEW RIGHT OF WAY, 140.00 FEET TO THE PLACE OF BEGINNING.

BEARINGS AND DISTANCES SHOWN ARE BASED ON GPS OBSERVATIONS AND CONFORM TO THE "TEXAS COORDINATE SYSTEM" TEXAS CENTRAL ZONE, NORTH AMERICAN DATUM OF 1983.

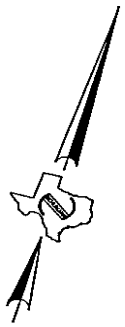

LEGEND:

MONUMENT AS DESCRIBED

PROPERTY LINE

FIELD NOTE DESCRIPTION OF A 0.03 ACRE TRACT OF LAND, BEING THE WEST 10 FEET OF CARVER STREET IN, BLOCK 9 OF EAST MIDLAND ADDITION, AN ADDITION TO THE CITY OF MIDLAND, TEXAS AS PER THE MAP OR PLAT RECORDED IN VOLUME 1, PAGE 52. OF THE PLAT RECORDS OF MIDLAND COUNTY, TEXAS, SAID 0.03 ACRE TRACT DESCRIBED MORE FULLY BY METES AND BOUNDS AS FOLLOWS:

BEGINNING AT A REINF BAR SET (N:10698578.12, E:1760421.79) IN THE NEW EAST RIGHT OF WAY OF SAID CARVER STREET FOR THE SOUTHEAST CORNER OF THIS TRACT, FROM WHICH THE SOUTHEAST LOT 1 CORNER OF SAID BLOCK 9 BEARS SOUTH 75°43'31" WEST 10.00 FEET;

THENCE SOUTH 75°43'31" WEST 10.00 FEET TO A REINF BAR SET FOR THE SOUTHWEST CORNER OF THIS TRACT;

THENCE NORTH 14°16'29" WEST 140.00 FEET TO A REINF BAR SET IN THE SOUTH RIGHT OF WAY OF GARDEN LANE FOR THE NORTHWEST CORNER OF THIS TRACT;

THENCE NORTH 75°43'31" EAST, ALONG SAID SOUTH RIGHT OF WAY, 10.00 FEET TO A REINF BAR SET FOR THE NORTHEAST CORNER OF THIS TRACT;

THENCE SOUTH 14°16'29" EAST 140.00 FEET TO THE PLACE OF BEGINNING.

BEARINGS AND DISTANCES SHOWN ARE BASED ON GPS OBSERVATIONS AND CONFORM TO THE "TEXAS COORDINATE SYSTEM" TEXAS CENTRAL ZONE, NORTH AMERICAN DATUM OF 1983.

Surveyor Certification

TO THE LIENHOLDERS, DAVID DIAZ

(OWNER) OF THE PREMISES AND TO THE ISSUING TITLE INSURANCE UNDERWRITER: THE UNDERSIGNED DOES HEREBY CERTIFY THAT THIS SURVEY WAS MADE ON THE GROUND OF THE PROPERTY LEGALLY DESCRIBED HEREON AND THAT THERE ARE NO KNOWN DISCREPANCIES, CONFLICTS, SHORTAGES IN AREA, BOUNDARY LINE CONFLICTS, ENCROACHMENTS, OVERLAPPING OF IMPROVEMENTS, EASEMENTS OR RIGHTS-OF-WAY, EXCEPT AS SHOWN HEREON.

DATED THIS 25TH DAY OF JANUARY, 2023

STATE OF TEXAS
REGISTERED
RJ DAUM
4826
PROFESSIONAL
LAND SURVEYOR

RJ DAUM
TEXAS RPLS 4826

SURVEY

BEING A ROAD VACANCY
OF THE EAST 10' OF MADISION STREET
AND THE WEST 10' OF CARVER STREET
IN THE
EAST MIDLAND ADDITION, BLOCK 9,
AN ADDITION TO THE CITY OF
MIDLAND, TEXAS, AS PER THE MAP OR
PLAT RECORDED IN VOLUME 1, PAGE 52
OF THE PLAT RECORDS OF

MIDLAND COUNTY, TEXAS

July 11, 2023

PROJECT: 78496

SCALE: 1" = 60'

JOB NO.: 78,496-ROAD

SCHUMANN
A LATERAL LAND COMPANY
LAND SURVEYING
TEXAS FIRM No. 10149500
800 N. MARIENFELD STREET
SUITE 100
MIDLAND, TEXAS 79701
Office (432) 684-5548

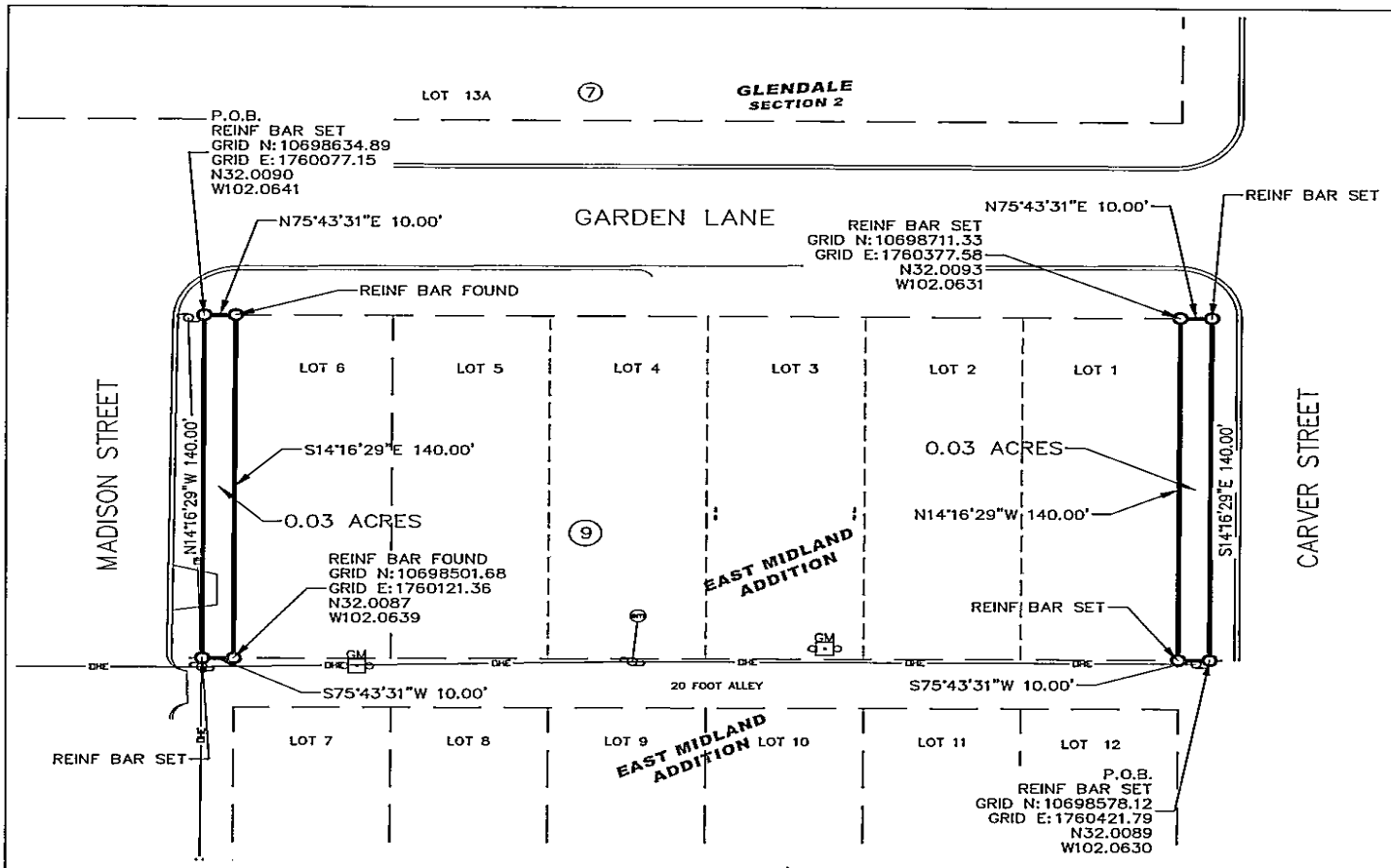

FIELD NOTE DESCRIPTION OF A 0.03 ACRE TRACT OF LAND, BEING THE EAST 10 FEET OF MADISON STREET IN, BLOCK 9 OF EAST MIDLAND ADDITION, AN ADDITION TO THE CITY OF MIDLAND, TEXAS AS PER THE MAP OR PLAT RECORDED IN VOLUME 1, PAGE 52, OF THE PLAT RECORDS OF MIDLAND COUNTY, TEXAS, SAID 0.03 ACRE TRACT DESCRIBED MORE FULLY BY METES AND BOUNDS AS FOLLOWS:

BEGINNING AT A REINF BAR SET (N: 10698634.89, E: 1760077.15) IN THE SOUTH RIGHT OF WAY OF GARDEN LANE AND THE NEW EAST RIGHT OF WAY OF MADISON STREET FOR THE NORTHWEST CORNER OF THIS TRACT, FROM WHICH THE NORTHWEST CORNER OF SAID BLOCK 9 BEARS NORTH 75°43'31" EAST 10.00 FEET;

THENCE NORTH 75°43'31" EAST, ALONG SAID SOUTH RIGHT OF WAY, 10.00 FEET TO A REINF BAR FOUND FOR THE NORTHEAST CORNER OF THIS TRACT;

THENCE SOUTH 14°16'29" EAST 140.00 FEET TO A REINF BAR FOUND FOR THE SOUTHEAST CORNER OF THIS TRACT;

THENCE SOUTH 75°43'31" WEST 10.00 FEET TO A REINF BAR SET IN THE NEW EAST RIGHT OF WAY OF SAID MADISON STREET FOR THE SOUTHWEST CORNER OF THIS TRACT;

THENCE NORTH 14°16'29" WEST, ALONG SAID NEW RIGHT OF WAY, 140.00 FEET TO THE PLACE OF BEGINNING.

BEARINGS AND DISTANCES SHOWN ARE BASED ON GPS OBSERVATIONS AND CONFORM TO THE "TEXAS COORDINATE SYSTEM" TEXAS CENTRAL ZONE, NORTH AMERICAN DATUM OF 1983.

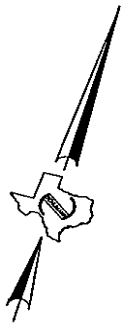

LEGEND:

MONUMENT AS DESCRIBED

PROPERTY LINE

FIELD NOTE DESCRIPTION OF A 0.03 ACRE TRACT OF LAND, BEING THE WEST 10 FEET OF CARVER STREET IN, BLOCK 9 OF EAST MIDLAND ADDITION, AN ADDITION TO THE CITY OF MIDLAND, TEXAS AS PER THE MAP OR PLAT RECORDED IN VOLUME 1, PAGE 52, OF THE PLAT RECORDS OF MIDLAND COUNTY, TEXAS, SAID 0.03 ACRE TRACT DESCRIBED MORE FULLY BY METES AND BOUNDS AS FOLLOWS:

BEGINNING AT A REINF BAR SET (N: 10698578.12, E: 1760421.79) IN THE NEW EAST RIGHT OF WAY OF SAID CARVER STREET FOR THE SOUTHEAST CORNER OF THIS TRACT, FROM WHICH THE SOUTHEAST LOT 1 CORNER OF SAID BLOCK 9 BEARS SOUTH 75°43'31" WEST 10.00 FEET;

THENCE SOUTH 75°43'31" WEST 10.00 FEET TO A REINF BAR SET FOR THE SOUTHWEST CORNER OF THIS TRACT;

THENCE NORTH 14°16'29" WEST 140.00 FEET TO A REINF BAR SET IN THE SOUTH RIGHT OF WAY OF GARDEN LANE FOR THE NORTHWEST CORNER OF THIS TRACT;

THENCE NORTH 75°43'31" EAST, ALONG SAID SOUTH RIGHT OF WAY, 10.00 FEET TO A REINF BAR SET FOR THE NORTHEAST CORNER OF THIS TRACT;

THENCE SOUTH 14°16'29" EAST 140.00 FEET TO THE PLACE OF BEGINNING.

BEARINGS AND DISTANCES SHOWN ARE BASED ON GPS OBSERVATIONS AND CONFORM TO THE "TEXAS COORDINATE SYSTEM" TEXAS CENTRAL ZONE, NORTH AMERICAN DATUM OF 1983.

Surveyor Certification

TO THE LIENHOLDERS, DAVID DIAZ

(OWNER) OF THE PREMISES AND TO THE ISSUING TITLE INSURANCE UNDERWRITER: THE UNDERSIGNED DOES HEREBY CERTIFY THAT THIS SURVEY WAS MADE ON THE GROUND OF THE PROPERTY LEGALLY DESCRIBED HEREON AND THAT THERE ARE NO KNOWN DISCREPANCIES, CONFLICTS, SHORTAGES IN AREA, BOUNDARY LINE CONFLICTS, ENCROACHMENTS, OVERLAPPING OF IMPROVEMENTS, EASEMENTS OR RIGHTS-OF-WAY, EXCEPT AS SHOWN HEREON.

DATED THIS 25TH DAY OF JANUARY, 2023

STATE OF TEXAS REGISTERED RJ DAUM 4826 PROFESSIONAL LAND SURVEYOR

RJ DAUM
TEXAS RPLS 4826

SURVEY

BEING A ROAD VACANCY
OF THE EAST 10' OF MADISION STREET
AND THE WEST 10' OF CARVER STREET
IN THE
EAST MIDLAND ADDITION, BLOCK 9,
AN ADDITION TO THE CITY OF
MIDLAND, TEXAS, AS PER THE MAP OR
PLAT RECORDED IN VOLUME 1, PAGE 52
OF THE PLAT RECORDS OF

MIDLAND COUNTY, TEXAS

July 11, 2023

PROJECT: 78496

SCALE: 1" = 60'

JOB NO.: 78,496-ROAD

SCHUMANN
A LATERAL LAND COMPANY
LAND SURVEYING
TEXAS FIRM No. 10149500
800 N. MARIENFELD STREET
SUITE 100
MIDLAND, TEXAS 79701
Office (432) 684-5548

MIDLAND
Planning Division

Vacate Right-of-Way/Public Utility Easement/Land/Street Application

Project Number: _____

Case Number: _____

Applicant *(if acting as Agent, see affidavit on page 2)* Printed Name: CATHOLIC DIOCESE OF SAN ANGELO		Phone (325) 651-7500 Email mwise@sanangelodiocese.org	
Address PO Box 1829	City SAN ANGELO	State TX	Zip 76902

Application is hereby made to the City Council to vacate the following:

- ☑ Right-of-Way
- ☐ Public Utility Easement
- ☐ Land
- ☐ Street

Description of Address: 1400, 1402, 1404, 1406, 1408, and 1410 Garden Ln.

Reason for Request: To obtain 10' off East ROW of Madison St. & 10' off the West ROW of Carver St.

Reasons, in applicant's opinion, why the requested vacation will not adversely affect the public welfare or will contribute to it in a positive way: They own the Entire North half of Block 9.

Submittal and Fees

Items to be submitted with this application form:

- Application Fee – Payable to the 'City of Midland'
- Sealed metes and bounds description of the property to be vacated (included on the map) and total square feet of vacation. Include ownership, legal and deed information for adjacent property owners
- Digital Copies of Survey (PDF/JPEG)

Utility Company Approval

Clearance is needed from the following utility companies:

- City of Midland
- AT&T
- Atmos Energy
- Suddenlink Cable TV Co.
- Oncor Electric
- Grande Communications

The City will route the request to these companies, but it is the applicant's responsibility to ensure clearance has been obtained to resolve any issues that may arise.

Policies

1. If the vacation request involves only a portion of a section right-of-way, such that approval would not affect the public's ability to travel along said right-of-way, then the request will be scheduled for consideration by the City Council. No public hearing will be needed.

2. If the vacation request involves an entire section of right-of-way, such that approval would cause the public to lose all rights to use it, then the following procedures apply:

   a. Nearby land owners who have a reasonable expectation to use said right-of-way, as determined by the Transportation Division, must first agree to the proposed vacation. It is the applicant's responsibility to obtain a letter of concurrence signed by the affected landowners.

   b. If all letters are received indicating that the affected landowners agree to the request, then a public hearing before the City Council will be scheduled. The Planning Division will mail public notice of the hearing to landowners within 400 feet of the affected right-of-way.

   c. If a request is approved, the right-of-way shall be divided into two equal parts, with each half becoming the property of the respective abutting owner. If the applicant desires to own the entire width, he or she must negotiate with the opposite landowner.

Signatures Ed Allemand-Schumann		
Applicant (signature): Mike Wyatt, Chairman		Date: 3/22/2023
Affected Property Owners:		
Signature:	Print:	Date:
Signature:	Print:	Date
Signature:	Print:	Date
Signature:	Print:	Date

The Vacation of right-of-way/public utility easement/land/street shall be considered officially received in the Planning office only when it has been submitted in full compliance with the provisions of Section 212 of the Texas Local Government Code and the Zoning Code of Ordinances of the City of Midland and when such required items for the application are also received.

All materials, including exhibits, submitted in support of an application, or displayed during a public hearing, shall remain the property of the City of Midland.

FOR OFFICE USE ONLY	
☐ 1 FOLDED Copy of Survey	☐ Survey in Digital Format (PDF/JPEG)
☐ Application Fee	
Check #_____	
Received By:	Date:

****Application will not be considered for scheduling until reviewed by a planner.****

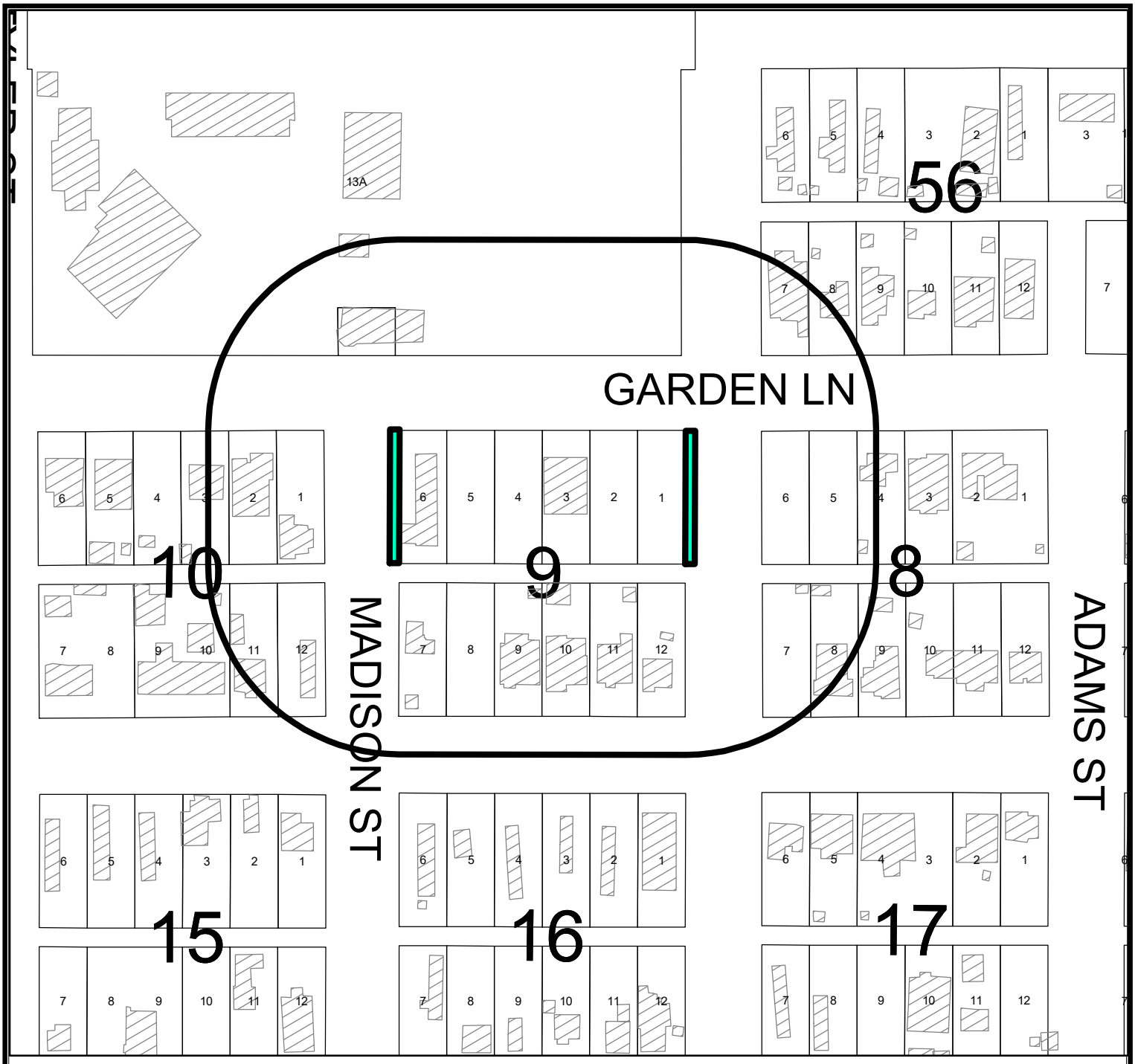

LOCATION MAP

V-23-0051 **Scale: 1" = 200'**

Consider a request for a vacation of a 0.06-acre portion of the land, located adjacent to Lots 1-6, Block 9, East Midland Addition, City and County of Midland, Texas.

Generally located on the southwest corner on the intersection of Garden Lane and North Carver Street - (Council District 2)

L E G E N D

- CITY LIMITS
- PARCEL
- PRIVATE BLDGS

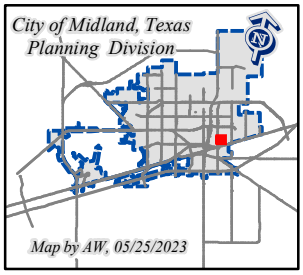

©THE CITY OF MIDLAND - 2021
THIS DATA IS NOT A SUBSTITUTION FOR A SURVEY AND NOR IS IT DESIGNED TO BE USED AS THE ONLY TOOL IN PERMITTING OR OTHER DECISIONS BASED SOLELY ON THE INFORMATION CONTAINED HEREIN.
THE CITY OF MIDLAND SHALL NOT BE RESPONSIBLE FOR ANY DECISIONS BASED UPON THE USE OF THIS DATA.

GARDEN LN

SF2

MADISON ST

MH

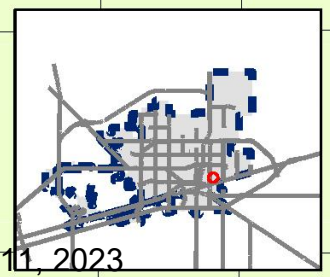

PACKET 16.15 July 11, 2023

Map By AW, 5/25/2023

V-23-0051

Scale: 1" = 200'

ZONING MAP

UCT, NOR IS IT DESIGNED
INFORMATION CONTAINED
THE USE OF THIS DATA.

Jeffrey R. Henderson
Supervisor, PMDS



Oncor Electric Delivery
2401 West Industrial
Midland, Texas 79701

June 14th, 2023

City of Midland Texas
Alexandra Walling
Planner, Development Services
300 North Loraine St. # 440
Midland, TX 79701

RE: Our Lady of Guadalupe – V-23-0051

Ms. Walling,

Oncor Electric Delivery has no objection to the vacation of the above referenced road vacancy of East 10' of N Madison St St in the East Midland addition in the City & County of Midland, TX. Oncor Electric Delivery has no objection to the road vacancy of West 10' of N Carver St with the exception of 30ft in length by 10ft in width at South end of proposed road vacancy. Oncor Electric has overhead facilities located in the dedicated right of way as noted on the attached drawing and plat that will remain in dedicated right of way.

Please let me know if you have any questions.

Sincerely,

Jeffrey R. Henderson

Oncor Electric Delivery Company

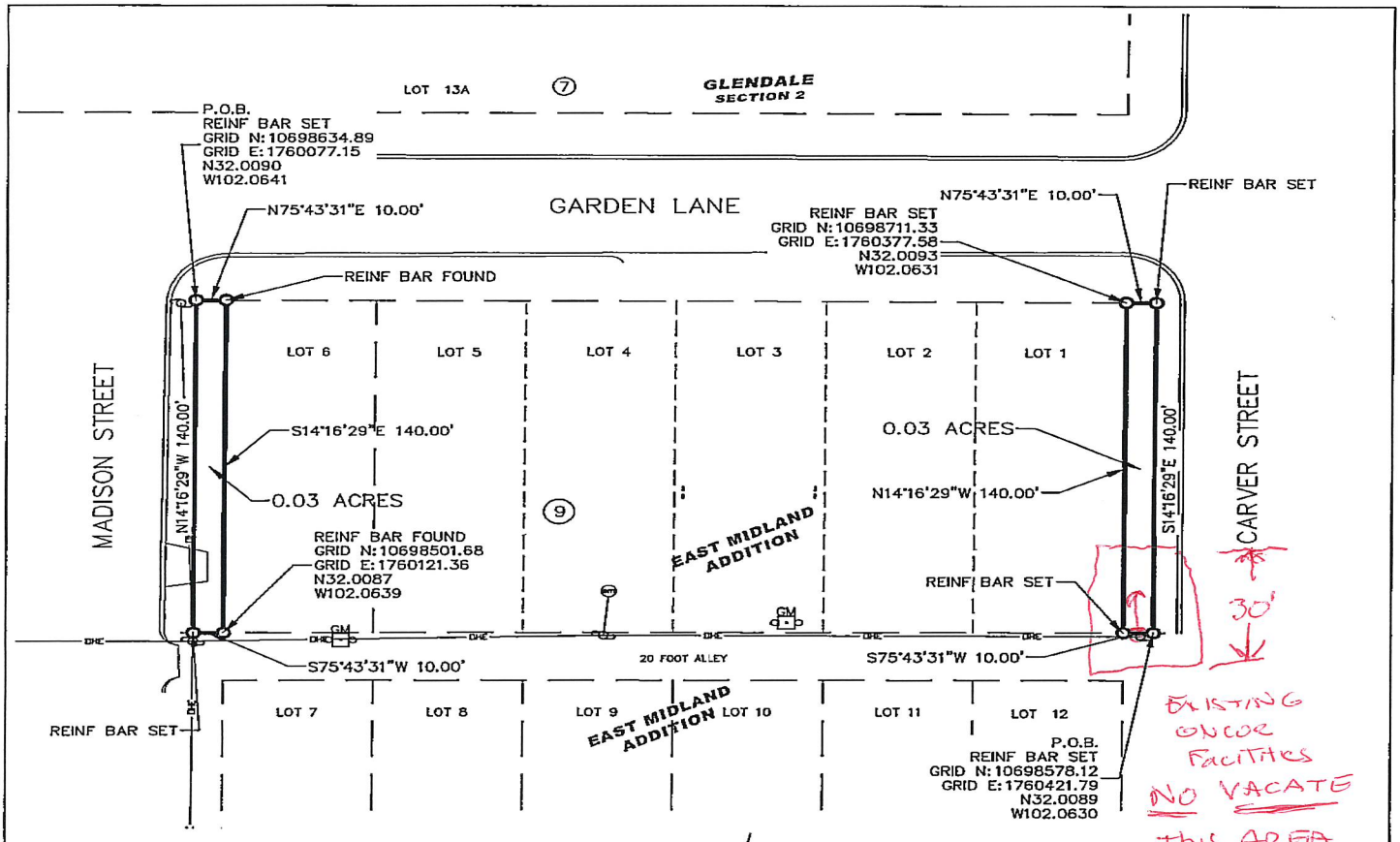

FIELD NOTE DESCRIPTION OF A 0.03 ACRE TRACT OF LAND, BEING THE EAST 10 FEET OF MADISON STREET IN, BLOCK 9 OF EAST MIDLAND ADDITION, AN ADDITION TO THE CITY OF MIDLAND, TEXAS AS PER THE MAP OR PLAT RECORDED IN VOLUME 1, PAGE 52, OF THE PLAT RECORDS OF MIDLAND COUNTY, TEXAS, SAID 0.03 ACRE TRACT DESCRIBED MORE FULLY BY METES AND BOUNDS AS FOLLOWS:

BEGINNING AT A REINF BAR SET (N: 10698634.89, E: 1760077.15) IN THE SOUTH RIGHT OF WAY OF GARDEN LANE AND THE NEW EAST RIGHT OF WAY OF MADISON STREET FOR THE NORTHWEST CORNER OF THIS TRACT, FROM WHICH THE NORTHWEST CORNER OF SAID BLOCK 9 BEARS NORTH 75°43'31" EAST 10.00 FEET;

THENCE NORTH 75°43'31" EAST, ALONG SAID SOUTH RIGHT OF WAY, 10.00 FEET TO A REINF BAR FOUND FOR THE NORTHEAST CORNER OF THIS TRACT;

THENCE SOUTH 14°16'29" EAST 140.00 FEET TO A REINF BAR FOUND FOR THE SOUTHEAST CORNER OF THIS TRACT;

THENCE SOUTH 75°43'31" WEST 10.00 FEET TO A REINF BAR SET IN THE NEW EAST RIGHT OF WAY OF SAID MADISON STREET FOR THE SOUTHWEST CORNER OF THIS TRACT;

THENCE NORTH 14°16'29" WEST, ALONG SAID NEW RIGHT OF WAY, 140.00 FEET TO THE PLACE OF BEGINNING.

BEARINGS AND DISTANCES SHOWN ARE BASED ON GPS OBSERVATIONS AND CONFORM TO THE "TEXAS COORDINATE SYSTEM" TEXAS CENTRAL ZONE, NORTH AMERICAN DATUM OF 1983.

LEGEND:

MONUMENT AS DESCRIBED

PROPERTY LINE

FIELD NOTE DESCRIPTION OF A 0.03 ACRE TRACT OF LAND, BEING THE WEST 10 FEET OF CARVER STREET IN, BLOCK 9 OF EAST MIDLAND ADDITION, AN ADDITION TO THE CITY OF MIDLAND, TEXAS AS PER THE MAP OR PLAT RECORDED IN VOLUME 1, PAGE 52, OF THE PLAT RECORDS OF MIDLAND COUNTY, TEXAS, SAID 0.03 ACRE TRACT DESCRIBED MORE FULLY BY METES AND BOUNDS AS FOLLOWS:

BEGINNING AT A REINF BAR SET (N: 10698578.12, E: 1760421.79) IN THE NEW EAST RIGHT OF WAY OF SAID CARVER STREET FOR THE SOUTHEAST CORNER OF THIS TRACT, FROM WHICH THE SOUTHEAST LOT 1 CORNER OF SAID BLOCK 9 BEARS SOUTH 75°43'31" WEST 10.00 FEET;

THENCE SOUTH 75°43'31" WEST 10.00 FEET TO A REINF BAR SET FOR THE SOUTHWEST CORNER OF THIS TRACT;

THENCE NORTH 14°16'29" WEST 140.00 FEET TO A REINF BAR SET IN THE SOUTH RIGHT OF WAY OF GARDEN LANE FOR THE NORTHWEST CORNER OF THIS TRACT;

THENCE NORTH 75°43'31" EAST, ALONG SAID SOUTH RIGHT OF WAY, 10.00 FEET TO A REINF BAR SET FOR THE NORTHEAST CORNER OF THIS TRACT;

THENCE SOUTH 14°16'29" EAST 140.00 FEET TO THE PLACE OF BEGINNING.

BEARINGS AND DISTANCES SHOWN ARE BASED ON GPS OBSERVATIONS AND CONFORM TO THE "TEXAS COORDINATE SYSTEM" TEXAS CENTRAL ZONE, NORTH AMERICAN DATUM OF 1983.

Surveyor Certification

TO THE LIENHOLDERS, DAVID DIAZ

(OWNER) OF THE PREMISES AND TO THE ISSUING TITLE INSURANCE UNDERWRITER: THE UNDERSIGNED DOES HEREBY CERTIFY THAT THIS SURVEY WAS MADE ON THE GROUND OF THE PROPERTY LEGALLY DESCRIBED HEREON AND THAT THERE ARE NO KNOWN DISCREPANCIES, CONFLICTS, SHORTAGES IN AREA, BOUNDARY LINE CONFLICTS, ENCROACHMENTS, OVERLAPPING OF IMPROVEMENTS, EASEMENTS OR RIGHTS-OF-WAY, EXCEPT AS SHOWN HEREON.

DATED THIS 25TH DAY OF JANUARY, 2023

STATE OF TEXAS
REGISTERED
RJ DAUM
4826
PROFESSIONAL
LAND SURVEYOR

RJ DAUM
TEXAS RPLS 4826

SURVEY

BEING A ROAD VACANCY
OF THE EAST 10' OF MADISION STREET
AND THE WEST 10' OF CARVER STREET
IN THE
EAST MIDLAND ADDITION, BLOCK 9,
AN ADDITION TO THE CITY OF
MIDLAND, TEXAS, AS PER THE MAP OR
PLAT RECORDED IN VOLUME 1, PAGE 52
OF THE PLAT RECORDS OF

MIDLAND COUNTY, TEXAS

SCHUMANN
A LATERAL LAND COMPANY
LAND SURVEYING
TEXAS FIRM No. 10149500

800 N. MARIENFELD STREET
SUITE 100
MIDLAND, TEXAS 79701

Office (432) 684-3948

SCALE: 1" = 60'

PROJECT: 78496
DWG NO. 78496-ROAD

Alexandra Walling

From: Luis Montez <Luis.Montez@AlticeUSA.com>
Sent: Thursday, May 25, 2023 3:22 PM
To: Alexandra Walling; Eron Zapata; Raymond Revilla
Subject: RE: External E-mail - New Vacation of city ROW

Optimum, has aerial coax plant in the alley & the ROW west of Carver St.
The blue border highlights what cable routes will be affected.
The red highlighted lines indicate the coax cables, that will be affected & subject to changes.
We cannot vacate unless the requestor's pay for relocating our plant.

On your map, it shows in green the vacate area that is needed, it seems like those poles we are attached to, are or will be removed.

From: Alexandra Walling <awalling@midlandtexas.gov>
Sent: Thursday, May 25, 2023 2:48 PM
To: Luis Montez <Luis.Montez@AlticeUSA.com>; Eron Zapata <Eron.Zapata@AlticeUSA.com>; Raymond Revilla <Raymond.Revilla@AlticeUSA.com>
Subject: External E-mail - New Vacation of city ROW

[External Email]

Caution: This email originated outside of Altice USA. Please do not click links or attachments unless you recognize the sender and know the content is safe.

Good evening,

Please review the attachments and respond to this email with any pertinent information. If you have no comments, still please let us know. Kindly respond by **Thursday, June 1, 2023.**

Thank You,

Alexandra Walling
Senior Planner | Planning Division
Development Services
Phone: 432-685-7409
awalling@midlandtexas.gov

MIDLAND
Feel the Energy!



300 N. Loraine | P.O. Box 1152 | Midland, TX 79702

Caution: This email originated outside of Altice USA. Please do not click links or attachments unless you recognize the sender and know the content is safe.

The information transmitted in this email and any of its attachments is intended only for the person or entity to which it is addressed and may contain information concerning Altice USA and/or its affiliates and subsidiaries that is proprietary, privileged, confidential and/or subject to copyright. Any review, retransmission, dissemination or other use of, or taking of any action in reliance upon, this information by persons or entities other than the intended recipient(s) is prohibited and may be unlawful. If you received this in error, please contact the sender immediately and delete and destroy the communication and all of the attachments you have received and all copies thereof.

CAUTION: This email originated from outside your organization — exercise caution when opening attachments or clicking links, especially from unknown senders.

Alexandra Walling

From: Ruben Guerra <ruben.guerra@astound.com>
Sent: Tuesday, June 13, 2023 1:51 PM
To: Alexandra Walling
Subject: Re: FW: New Vacation of city ROW



After looking at our maps it does not seem that we have any services in the highlighted sections that you have marked per your map.

Thank You
Ruben Guerra
Construction Coordinator
O: 432-272-3088
C: 432-653-9369
Ruben.Guerra@astound.com
Astound Business Solutions
Powered by RCN | Grande | Wave
astound.com

On Tue, Jun 13, 2023 at 1:13 PM Alexandra Walling <awalling@midlandtexas.gov> wrote:

> Hello!
>
> I am just checking in, I will need your feedback ASAP as this item is on the agenda for June 27.
>
> ---
>
> **From:** Alexandra Walling
> **Sent:** Thursday, May 25, 2023 2:50 PM
> **To:** Ruben Guerra <ruben.guerra@astound.com>; Ruban Guerra <ruban.guerra@mygrande.com>
> **Subject:** New Vacation of city ROW
> **Importance:** High
>
> Good evening,
>
> Please review the attachments and respond to this email with any pertinent information. If you have no comments, still please let us know. Kindly respond by **Thursday, June 1, 2023.**

Thank You,

Alexandra Walling

Senior Planner | Planning Division

Development Services

Phone: 432-685-7409

awalling@midlandtexas.gov





300 N. Loraine | P.O. Box 1152 | Midland, TX 79702

CAUTION: This email originated from outside your organization — exercise caution when opening attachments or clicking links, especially from unknown senders.

Alexandra Walling

From: UNDERWOOD, JERRY D <ju1659@att.com>
Sent: Tuesday, June 13, 2023 1:55 PM
To: Alexandra Walling
Subject: RE: New Vacation of city ROW

Yes ma'am, thanks!

From: Alexandra Walling <awalling@midlandtexas.gov>
Sent: Tuesday, June 13, 2023 1:51 PM
To: UNDERWOOD, JERRY D <ju1659@att.com>
Subject: RE: New Vacation of city ROW

I am usure of that at the moment as they have not replied. But once they do if they inform me, they are moving their poles I will let you know as well.

For your comments I will put you are okay with the vacation as long as an easement is obtained. Is that okay with you?

From: UNDERWOOD, JERRY D <ju1659@att.com>
Sent: Tuesday, June 13, 2023 1:46 PM
To: Alexandra Walling <awalling@midlandtexas.gov>
Subject: RE: New Vacation of city ROW

I am good with that. Is Oncor leaving their poles and power in place? If they gave it up and are rerouting we would have to reroute as well to be off their pole but it would still be at the customers cost.

Thanks,
Jerry

From: Alexandra Walling <awalling@midlandtexas.gov>
Sent: Tuesday, June 13, 2023 1:43 PM
To: UNDERWOOD, JERRY D <ju1659@att.com>
Subject: RE: New Vacation of city ROW

Can we put an easement in place?

From: UNDERWOOD, JERRY D <ju1659@att.com>
Sent: Tuesday, June 13, 2023 1:42 PM
To: Alexandra Walling <awalling@midlandtexas.gov>
Subject: RE: New Vacation of city ROW

We aren't buried there, we are on Oncors poles. I don't want to give up the ROW since we are already there . If they want us to give it up, it will need to be approved by our ROW department and they would need to pay to reroute our cable.

Thanks,
Jerry

From: Alexandra Walling <awalling@midlandtexas.gov>
Sent: Tuesday, June 13, 2023 1:38 PM
To: UNDERWOOD, JERRY D <ju1659@att.com>
Subject: RE: New Vacation of city ROW

Hello!

So to clarify, are they okay to build on top of these or no?

From: UNDERWOOD, JERRY D <ju1659@att.com>
Sent: Tuesday, June 13, 2023 1:31 PM
To: Alexandra Walling <awalling@midlandtexas.gov>
Subject: RE: New Vacation of city ROW

Good afternoon,

We have fiber on the power poles that is going across where the easement vacation is requested. I have marked a red line on the attachment where we have cable.

Thanks,
Jerry

From: Alexandra Walling <awalling@midlandtexas.gov>
Sent: Tuesday, June 13, 2023 1:12 PM
To: UNDERWOOD, JERRY D <ju1659@att.com>
Subject: FW: New Vacation of city ROW
Importance: High

Hello!

I am just checking in, I will need your feedback ASAP as this item is on the agenda for June 27.

From: Alexandra Walling
Sent: Thursday, May 25, 2023 2:37 PM
To: UNDERWOOD, JERRY D <ju1659@att.com>
Subject: New Vacation of city ROW
Importance: High

Good evening,

Please review the attachments and respond to this email with any pertinent information. If you have no comments, still please let us know. Kindly respond by **Thursday, June 1, 2023.**

Thank You,

Alexandra Walling

Senior Planner | Planning Division
Development Services
Phone: 432-685-7409
awalling@midlandtexas.gov







300 N. Loraine | P.O. Box 1152 | Midland, TX 79702

CAUTION: This email originated from outside your organization — exercise caution when opening attachments or clicking links, especially from unknown senders.

CAUTION: This email originated from outside your organization — exercise caution when opening attachments or clicking links, especially from unknown senders.

CAUTION: This email originated from outside your organization — exercise caution when opening attachments or clicking links, especially from unknown senders.

CAUTION: This email originated from outside your organization — exercise caution when opening attachments or clicking links, especially from unknown senders.

ATMOS ENERGY

West Texas Division
P.O. Box 1111,
Midland, Texas 79702

City of Midland
Alexandra Walling
Senior Planner/Planning Division
300 N. Loraine
Midland, Texas 79701

June 1, 2023

Re: Case Name: Our Lady of Guadalupe
Case Number: V-23-0051

Alexandra,

Atmos Energy currently has facilities located within the above-described Right of Way along the West side of Carver street. We currently have two gas lines that extend along a portion of the proposed vacate area. Atmos would have no objection to vacation of the referenced area if our facilities are within a designated utility easement.
Please let me know if you have any further questions.

Sincerely,

Mark Lieb

Mark Lieb
Project Specialist
Atmos Energy/Permian Basin
432-967-0370 cell
mark.lieb@atmosenergy.com

Alexandra Walling

From: LReyna@midcad.org
Sent: Wednesday, May 31, 2023 5:14 PM
To: Alexandra Walling
Subject: Re: Appraisal for ROW Vacation
Attachments: MCAD LETTER.pdf

Follow Up Flag: Follow up
Flag Status: Flagged

2613.6 sf X $2.00 SF = Value $5227.20 estimated value.

Alexandra,

Please see above.

Thank you,

Lisa Reyna, RPA
Assistant Chief Appraiser
Midland Central Appraisal District
4631 Andrews Hwy
Midland, TX 79703
Phone (432) 699-4991
Fax (432) 689-7185

From: Alexandra Walling <awalling@midlandtexas.gov>
To: "LReyna@midcad.org" <LReyna@midcad.org>
Date: 05/25/2023 03:00 PM
Subject: Appraisal for ROW Vacation

Good evening,

We have received a request from Schumann Engineering to vacate and abandon the following:

CASE NUMBER	GENERAL LOCATION	AREA SQ. FT.	CURRENT ZONING
V-23-0051	Generally located on the southwest corner on the intersection of Garden Lane and North Carver Street. (Council District 2)	0.06-acre portion of the land, located in adjacent to Lots 1-6, Block 9, East Midland Addition, City and County of Midland,	SF-2, Single-Family Dwelling District

		Texas.	

If possible, please respond by **Thursday, June 1, 2023.**

Thank You,

Alexandra Walling
Senior Planner | Planning Division
Development Services
Phone: 432-685-7409
awalling@midlandtexas.gov

300 N. Loraine | P.O. Box 1152 | Midland, TX 79702

CAUTION: This email originated from outside your organization — exercise caution when opening attachments or clicking links, especially from unknown senders.

Alexandra Walling

From: Arguello, Martin <Martin.Arguello@oncor.com>
Sent: Wednesday, June 14, 2023 11:01 AM
To: Alexandra Walling; Ortega, Gustavo
Subject: RE: New Vacation of city ROW

Alexandra, Oncor is clear of all facilities and easements.

From: Alexandra Walling <awalling@midlandtexas.gov>
Sent: Wednesday, June 14, 2023 10:52 AM
To: Ortega, Gustavo <Gustavo.Ortega@oncor.com>; Blankenship, Chad <Chad.Blankenship@oncor.com>; Arguello, Martin <Martin.Arguello@oncor.com>
Subject: FW: New Vacation of city ROW
Importance: High

WARNING: This email message did not originate from Oncor and is from an external organization. **DO NOT CLICK** links or attachments unless you recognize the sender and are certain the content is safe.

Good morning,

I will need comments from you **by 4pm today 6/14/23** or else we will have to put "no comments" for Oncor on the City Council report. We would really appreciate your feedback!

From: Alexandra Walling
Sent: Tuesday, June 13, 2023 1:13 PM
To: Gus Ortega <Gustavo.Ortega@oncor.com>; Blankenship, Chad <chad.blankenship@oncor.com>; Arguello, Martin <Martin.Arguello@oncor.com>
Subject: FW: New Vacation of city ROW
Importance: High

Hello!

I am just checking in, I will need your feedback ASAP as this item is on the agenda for June 27.

From: Alexandra Walling
Sent: Thursday, May 25, 2023 2:40 PM
To: Gus Ortega <Gustavo.Ortega@oncor.com>; Blankenship, Chad <chad.blankenship@oncor.com>; Arguello, Martin <Martin.Arguello@oncor.com>
Subject: New Vacation of city ROW
Importance: High

Good evening,

Please review the attachments and respond to this email with any pertinent information. If you have no comments, still please let us know. Kindly respond by **Thursday, June 1, 2023.**

Thank You,

Alexandra Walling
Senior Planner | Planning Division
Development Services
Phone: 432-685-7409
awalling@midlandtexas.gov

300 N. Loraine | P.O. Box 1152 | Midland, TX 79702

Confidentiality Notice: This email message, including any attachments, contains or may contain confidential information intended only for the addressee. If you are not an intended recipient of this message, be advised that any reading, dissemination, forwarding, printing, copying or other use of this message or its attachments is strictly prohibited. If you have received this message in error, please notify the sender immediately by reply message and delete this email message and any attachments from your system.

CAUTION: This email originated from outside your organization — exercise caution when opening attachments or clicking links, especially from unknown senders.








© 2023 Google
© 2023 Google
© 2023 Google

City Council Meeting

Item Number: 17

Meeting Date: July 11, 2023

To: City Council / City Manager

From: Tina Jauz, Assistant City Manager

Subject: AN ORDINANCE OF THE CITY OF MIDLAND, TEXAS, DESIGNATING LOTS 22, 23 AND 24, BLOCK 65, ORIGINAL TOWN ADDITION, CITY AND COUNTY OF MIDLAND, TEXAS (GENERALLY LOCATED ON THE WEST SIDE OF SOUTH LORAINE STREET, APPROXIMATELY 130 FEET NORTH OF WEST MISSOURI AVENUE) AS TAX ABATEMENT REINVESTMENT ZONE NUMBER 2023-02 FOR COMMERCIAL AND INDUSTRIAL TAX ABATEMENT AS AUTHORIZED BY CHAPTER 312 OF THE TEXAS TAX CODE; ESTABLISHING THE BOUNDARIES THEREOF AND OTHER MATTERS RELATING THERETO; DECLARING FINDINGS OF FACT; AND PROVIDING A SAVINGS AND SEVERABILITY CLAUSE (DISTRICT 2) (CITY MANAGER)

Purpose:

An ordinance designating Lots 22, 23, and 24, Block 65, Original Town Addition, City and County of Midland, Texas (Generally located on the west side of South Loraine Street, approximately 130 feet north of West Missouri Avenue) as a Tax Abatement Reinvestment Zone Number 2023-02 for commercial and industrial tax abatement as authorized by Chapter 312 of the Texas Tax Code; establishing the boundaries thereof and other matters relating thereto; declaring findings of fact; and providing a savings and severability clause.

Recommended City Council Action:

Approve

Fiscal Impact:

None.

Discussion:

The public hearing is the first step in establishing a Reinvestment Zone. A public notice was issued and all taxing entities were notified of the proposed Reinvestment Zone. If approved, following a second reading of the ordinance, the city will have the ability to enter into a Tax Abatement Agreement with any interested party. Any such agreement would be subject to City Council approval.

On November 15, 2022, the City Council approved a resolution adopting guidelines and criteria for Tax Abatement Agreements as authorized by Chapter 312 of the Texas Tax Code. The guidelines are in place for two years.

Morris Williams Jr.

City Manager's Office

ORDINANCE NO. _____

AN ORDINANCE OF THE CITY OF MIDLAND, TEXAS, DESIGNATING LOTS 22, 23 AND 24, BLOCK 65, ORIGINAL TOWN ADDITION, CITY AND COUNTY OF MIDLAND, TEXAS (GENERALLY LOCATED ON THE WEST SIDE OF SOUTH LORAINE STREET, APPROXIMATELY 130 FEET NORTH OF WEST MISSOURI AVENUE) AS TAX ABATEMENT REINVESTMENT ZONE NUMBER 2023-02 FOR COMMERCIAL AND INDUSTRIAL TAX ABATEMENT AS AUTHORIZED BY CHAPTER 312 OF THE TEXAS TAX CODE; ESTABLISHING THE BOUNDARIES THEREOF AND OTHER MATTERS RELATING THERETO; DECLARING FINDINGS OF FACT; AND PROVIDING A SAVINGS AND SEVERABILITY CLAUSE

WHEREAS, the City Council of the City of Midland, Texas (the "City"), desires to promote the development or redevelopment of a certain contiguous geographic area within its jurisdiction by the creation of a reinvestment zone for commercial and industrial tax abatement as authorized by Chapter 312 of the Texas Tax Code; and

WHEREAS, by Resolution No. 2001-129, dated April 24, 2001, the City Council of the City of Midland stated its intention to consider granting tax abatement within the City; and

WHEREAS, by Resolution No. 2022-162, dated November 15, 2022, the City Council of the City of Midland adopted Guidelines and Criteria governing tax abatement reinvestment zones and agreements within the City; and

WHEREAS, at the City Council meeting scheduled for 10:00 a.m. on July 11, 2023, the City Council of the City of Midland held a public hearing regarding the designation of Lots 22, 23 and 24, Block 65, Original Town Addition, City and County of Midland, Texas (the "Area") as a reinvestment zone for tax abatement purposes as authorized by the Texas Tax Code; and

WHEREAS, not later than the seventh day before the date of the public hearing, notice of the public hearing was published in a newspaper having general circulation in the municipality and delivered in writing to the presiding officer of the governing body of each taxing unit that includes in its boundaries real property that is to be included in the proposed

reinvestment zone; and

WHEREAS, the City Council at such public hearing invited interested persons to speak and present evidence for or against said designation; and

WHEREAS, all interested persons were provided an opportunity to present comments on said designation;

NOW, THEREFORE, BE IT ORDAINED BY THE CITY COUNCIL OF THE CITY OF MIDLAND, TEXAS:

SECTION ONE. That the facts and recitations contained in the preamble of this ordinance are hereby found and declared to be true and correct.

SECTION TWO. That the City Council, after conducting such public hearing and having heard such evidence and testimony, has made the following findings and determinations based on the testimony presented to it:

A. That a public hearing on the designation of the Area as a reinvestment zone was properly held and conducted and that notice of such public hearing was published and delivered in writing to the presiding officer of the governing body of each taxing unit that includes in its boundaries real property that is to be included in the reinvestment zone as required by law;

B. That the boundaries of the reinvestment zone shall be the boundaries of the Area;

C. That the improvements sought are feasible and practical and would be a benefit to the land to be included in the reinvestment zone and to the City after the expiration of an agreement entered into under Section 312.204 of the Texas Tax Code;

D. That the Area meets the criteria for designation as a reinvestment zone as set forth in Section 312.202 of the Texas Tax Code in that it is reasonably likely as a result of the designation to contribute to the retention or expansion of primary employment or to attract major investment in the zone that would be a benefit to the property and that would contribute to the economic development of the City; and

E. That the Area meets the criteria for the designation of a reinvestment zone as set forth in the City of Midland's Guidelines and Criteria governing tax abatement reinvestment zones and agreements within the City.

SECTION THREE. That pursuant to Section 312.201 of the Texas Tax Code, the City hereby designates the Area as a reinvestment zone for commercial and industrial tax abatement, and such reinvestment zone shall hereafter be officially designated as Tax

Abatement Reinvestment Zone Number 2023-02, City of Midland, Midland County, Texas.

SECTION FOUR. That said designation of the Area as Tax Abatement Reinvestment Zone Number 2023-02 shall take effect immediately upon the final adoption of this ordinance.

SECTION FIVE. That in order for a commercial-industrial project to be considered for an agreement for tax abatement, the project shall:

A. Be located wholly within Tax Abatement Reinvestment Zone Number 2023-02 as established herein;

B. Not include property that is owned or leased by a member of the City Council of the City of Midland; and

C. Conform to the requirements of the Guidelines and Criteria governing tax abatement reinvestment zones and agreements within the City, and all other applicable laws and regulations.

SECTION SIX. That written agreements for tax abatement as provided for by Section 312.205 of the Texas Tax Code shall:

A. List the kind, number, and location of all proposed improvements of the property;

B. Provide access to and authorize inspection of the property by municipal employees to ensure that the improvements or repairs are made according to the specifications and conditions of the agreement;

C. Limit the uses of the property consistent with the general purpose of encouraging development or redevelopment of the zone during the period that property tax exemptions are in effect;

D. Provide for recapturing property tax revenue lost as a result of the agreement if the owner of the property fails to make the improvements, repairs, or provide employment as provided by the agreement;

E. Contain each term agreed to by the owner of the property;

F. Require the owner of the property to certify annually to the governing body of each taxing unit that the owner is in compliance with each applicable term of the agreement; and

G. Provide that the governing body of the municipality may cancel or modify the agreement if the property owner fails to comply with the agreement.

SECTION SEVEN. If any section, subsection, sentence, clause or phrase of this ordinance is, for any reason, held to be unconstitutional or invalid, such holding shall not

affect the validity of the remaining portions of this ordinance. The Council of the City of Midland hereby declares that it would have passed this ordinance and each section, subsection, sentence, clause, or phrase hereof irrespective of the fact that any one or more sections, subsections, sentences, clauses, or phrases be declared unconstitutional or invalid.

SECTION EIGHT. The designation of Tax Abatement Reinvestment Zone Number 2023-02 shall expire five years from the effective date of this ordinance. The designation of a tax abatement reinvestment zone may be renewed for periods not exceeding five years. The expiration of a reinvestment zone designation does not affect an existing tax abatement agreement authorized by the City Council of the City of Midland, Texas.

The above and foregoing ordinance was duly proposed, read in full and adopted on first reading, the _____ day of _____, A.D., 2023; and passed to second reading on motion of Council member _____, seconded by Council member _____, by the following vote:

Council members voting "AYE":

Council members voting "NAY":

The above and foregoing ordinance was read in full and finally adopted by the following vote upon motion of Council member _____, seconded by Council member _____, on the _____ day of _____, A.D., 2023, at a regular meeting of the City Council:

Council members voting "AYE":

Council members voting "NAY":

PASSED AND APPROVED THIS _____ day of _____, A.D., 2023.

_____
Lori Merritt Blong, Mayor

ATTEST:

_____
Marcia Bentley-German, City Secretary

APPROVED AS TO CONTENT
AND COMPLETENESS:

_____
Tina Jauz, Assistant City Manager

APPROVED ONLY AS TO FORM:

_____
John Ohnemiller, City Attorney

City Council Meeting

Item Number: 18

Meeting Date: July 11, 2023

To: City Council / City Manager

From: Alexandra Walling, Senior Planner

Subject: AN ORDINANCE EXTENDING THE BOUNDARIES OF THE CITY OF MIDLAND, TEXAS, BY ADDING THERETO A CERTAIN AREA ADJOINING THE PRESENT CITY LIMITS, BEING A 17.345-ACRE TRACT OF LAND OUT OF SECTION 35, BLOCK 40, T-1-S, T&P RR CO. SURVEY, MIDLAND COUNTY, TEXAS (GENERALLY LOCATED ON THE NORTH SIDE OF HIGHWAY 191, APPROXIMATELY 700 FEET WEST OF HIGHWAY 158); ORDERING PUBLICATION; AND ORDERING RECORDATION BY THE CITY SECRETARY (EXTRATERRITORIAL JURISDICTION) (DEVELOPMENT SERVICES)

Purpose:

The applicant, Charles Hodges, is requesting an Annexation of a 17.345-acre tract of land out of Section 35, Block 40, T-1-S, T&P RR. Co Survey, Midland County, Texas, located north of State Highway 191, approximately 700-feet west of State Highway 158. An associated Initial Zoning is also in review to zone the land to RR, Regional Retail District.

Recommended City Council Action:

Approve

Fiscal Impact:

Additional land to be developed under City regulations in an expanded growth area.

Discussion:

The applicant, Charles Hodges is requesting to annex a 17.345-acre tract of land out of Section 35, Block 40, T-1-S, T&P RR. Co Survey, Midland County, Texas. The proposed

annexation will allow the provision of City services to the property. This is considered a voluntary annexation.

On May 10, 2023, the service agreement between the City and the petitioner was executed. This is the next step in the annexation process.

This project has been circulated to all respective departments for internal review and received no objections.

Engineering: (Approved)

No objection.

Transportation: (Approved)

No objections.

Fire: (Approved)

All future development shall meet the requirements of IFC 2015 ed. and local ordinances.

Building Code: (Approved)

No objection.

Oil and Gas: (Approved)

No Oil and Gas Issues. Informational: No Oil or Gas wells identified within 500 ft. permitted well radius or in the 135 ft. non-permitted well radius of location on plat. Please note if oil & gas wells are not identified or left off plat, this could prevent receiving city permits for structures. Any plugged and abandoned (P&A) well would need to be identified. No construction is allowed on top of P&A wells.

GIS: (Approved)

Portion of annexation along HWY 158 does not connect to city limits.

Planning:

The Future Land Use Map in the Tall City Tomorrow Comprehensive Plan calls for Urban-Medium (U-M) and Urban-High (U-H) utilization in this area which represents commercial land uses, single-family dwellings, and high connectivity with good access to highways, freeways, and arterial roads.

As this proposed development will conform with the Tall City Tomorrow Comprehensive Plan,

staff recommends approval of this annexation.

Letters of Objection:

As of June 14, 2023, staff has received no letters of objection to this request.

Attachments:

Application
Petition (Exhibit A)
Maps

Morris Williams Jr.

City Manager's Office

ORDINANCE NO. _____

AN ORDINANCE EXTENDING THE BOUNDARIES OF THE CITY OF MIDLAND, TEXAS, BY ADDING THERETO A CERTAIN AREA ADJOINING THE PRESENT CITY LIMITS, BEING A 17.345-ACRE TRACT OF LAND OUT OF SECTION 35, BLOCK 40, T-1-S, T&P RR CO. SURVEY, MIDLAND COUNTY, TEXAS (GENERALLY LOCATED ON THE NORTH SIDE OF HIGHWAY 191, APPROXIMATELY 700 FEET WEST OF HIGHWAY 158); ORDERING PUBLICATION; AND ORDERING RECORDATION BY THE CITY SECRETARY

WHEREAS, a public hearing before the City Council of the City of Midland, Texas, a home rule municipal corporation, was held in the City Council Chamber on July 11, 2023, during which all interested persons were provided an opportunity to be heard on the proposed annexation of the hereinafter described territory; and

WHEREAS, notice of the public hearing was published on the City of Midland, Texas' Internet website on June 23, 2023, and the notice remained posted until the date of the public hearing; and

WHEREAS, notice of the public hearing was published in a newspaper having general circulation in the City of Midland, Texas, and in the below described territory, on June 23, 2023; and

WHEREAS, all required notices of the proposed annexation and the public hearing were given in accordance with applicable laws; and

WHEREAS, the City of Midland has entered into a written agreement with the owner(s) of the hereinafter described territory for the provision of services in said area;

NOW, THEREFORE, BE IT ORDAINED BY THE CITY COUNCIL OF THE CITY OF MIDLAND, TEXAS:

SECTION ONE. That the following described property adjoining the present boundary lines of the City of Midland, Texas, be and the same is hereby annexed to and incorporated within the boundary of the City of Midland, Texas:

Being a 17.345-acre tract of land out of Section 35, Block 40, T-1-S, T&P RR

Co. Survey, Midland County, Texas, and being more fully described by metes and bounds in the petition for annexation attached hereto as Exhibit "A" and incorporated herein by reference for all legal purposes.

SECTION TWO. That this ordinance shall be published in the official newspaper in the City of Midland, Texas, and the same shall not be effective until after the publication thereof.

SECTION THREE. That the City Secretary is hereby authorized and directed to file a certified copy of this ordinance with the County Clerk of Midland County, Texas, for the purpose of recording in the Deed Records of Midland County, Texas.

The above and foregoing ordinance was duly proposed, read in full and adopted on first reading, the _____ day of _____, A.D., 2023; and passed to second reading on motion of Council member _____, seconded by Council member _____, by the following vote:

Council members voting "AYE":

Council members voting "NAY":

The above and foregoing ordinance was read in full and finally adopted by the following vote upon motion of Council member _____, seconded by Council member _____, on the _____ day of _____, A.D., 2023, at a regular meeting of the City Council:

Council members voting "AYE":

Council members voting "NAY":

PASSED AND APPROVED THIS _____ day of _____, A.D., 2023.

_____
Lori Merritt Blong, Mayor

ATTEST:

_____
Marcia Bentley-German, City Secretary

APPROVED AS TO CONTENT
AND COMPLETENESS:

_____
Charles Harrington, Director of Development Services

APPROVED ONLY AS TO FORM:

_____
John Ohnemiller, City Attorney

EXHIBIT "A"

PETITION FOR ANNEXATION

Dear City of Midland:

As current owner of the tract of land described in Exhibit A, which is attached hereto and incorporated herein (the "Property"), **Bass Pro Outdoor World, L.L.C**, a Missouri limited liability company ("Owner"), submits this petition for annexation and hereby requests that the Property be added to and annexed to the City of Midland.

OWNER

By: _____
Signature

KG Kevin A. Maliszewski
Printed Name

CFO
Title

THE STATE OF Missouri §
§
COUNTY OF Greene §

This instrument was acknowledged before me on the 4th day of April, 2023, by Kevin Maliszewski in the capacity herein stated.

MY COMMISSION EXPIRES

8/5/2024

Notary Public, State of Missouri

TAMMY L. CAMERON
Notary Public – Notary Seal
STATE OF MISSOURI
Greene County
My Commission Expires Aug. 5, 2024
Commission #12521666

EXHIBIT A TO PETITION FOR ANNEXATION

FIELD NOTE DESCRIPTION OF A 17.345 ACRE TRACT OF LAND, SITUATED IN SECTION 35, BLOCK 40, TOWNSHIP 1 SOUTH, TEXAS and PACIFIC RAILWAY COMPANY SURVEY, MIDLAND COUNTY, TEXAS, BEING A PORTION OF THAT SAME LAND AS DESCRIBED AS TRACT SEVEN IN A WARRANTY DEED FILED AS DOCUMENT NUMBER 2008-26873 IN VOLUME 3131 ON PAGE 210 OF THE OFFICIAL PUBLIC RECORDS (OPR) OF SAID MIDLAND COUNTY, TEXAS, AND BEING MORE PARTICULARLY DESCRIBED AS FOLLOWS;

COMMENCING AT N.(Y):10693732.66, E.(X):1726261.95, A POINT WITHIN A TXDOT TYPE I CONCRETE MONUMENT (TYPE I) FOUND AND ACCEPTED AS BEING ON THE NORTH RIGHT-OF-WAY LINE OF STATE HIGHWAY 191, AS DESCRIBED IN VOLUME 715 ON PAGE 287 OF SAID "OPR" AT THE SOUTHEAST CORNER OF A TRACT DESCRIBED AS AN 80-FOOT-WIDE DRAINAGE EASEMENT IN VOLUME 715 ON PAGE 280 OF SAID "OPR" AND BEING THE SOUTHWEST CORNER OF A CALLED 7.573 ACRE TRACT IN DOCUMENT NUMBER 2018-31010 OF SAID "OPR", **THENCE** S.75°15'20"W., ALONG SAID RIGHT-OF-WAY, 79.47 FEET TO A "TYPE I" FOUND FOR THE **POINT OF BEGINNING** AND THE SOUTHEAST CORNER HEREOF;

THENCE S.75°15'20"W., ALONG SAID RIGHT-OF-WAY, 724.82 FEET TO A "TYPE I" FOUND FOR AN ANGLE CORNER HEREOF;

THENCE S.71°08'16"W., ALONG SAID RIGHT-OF-WAY, 80.97 FEET TO A POINT THAT BEARS S.14°44'01"E., 0.31 FEET FROM A ONE HALF INCH IRON ROD WITH A PLASTIC CAP MARKED "WAI 5714" (WAI) FOR THE SOUTHWEST CORNER HEREOF;

THENCE N.14°44'01"W., ACROSS SAID TRACT SEVEN, 742.30 FEET TO A "WAI" FOUND FOR THE POINT OF CURVATURE FOR A CURVE TO THE LEFT HAVING A RADIUS OF 220.00 FEET AND A CHORD BEARING AND DISTANCE OF N.22°58'18"W., 62.86 FEET;

THENCE ALONG THE ARC OF SAID CURVE 63.08 FEET TO A "WAI" FOUND FOR A POINT OF DEFLECTION HEREOF;

THENCE N.79°38'54"W., 30.25 FEET TO A "WAI" FOUND FOR AN ANGLE CORNER HEREOF;

THENCE N.30°32'30"W., 99.89 FEET TO A "WAI" FOUND FOR A POINT OF DEFLECTION AND THE POINT OF CURVATURE FOR A CURVE TO THE NORTHEAST HAVING A RADIUS OF 550.00 FEET AND A CHORD BEARING AND DISTANCE OF N.45°10'40"E., 271.48 FEET FOR THE NORTHWEST CORNER HEREOF;

THENCE ALONG THE ARC OF SAID CURVE 274.32 FEET TO A "WAI" FOUND FOR A POINT OF TANGENCY HEREOF;

THENCE N.30°55'14"E., 384.19 FEET TO A ONE HALF INCH IRON ROD FOUND FOR A CUTBACK CORNER HEREOF;

THENCE N.14°40'14"W., 28.28 FEET TO A POINT ON THE SOUTHWEST RIGHT-OF-WAY LINE OF STATE HIGHWAY 158, BEING THE NORTHEAST LINE OF SAID "TRACT SEVEN" THAT BEARS S.69°42'03"W., 0.23 FEET FROM A ONE HALF INCH IRON ROD, FOR THE NORTH CORNER HEREOF;

THENCE S.59°05'27"E., ALONG SAID TRACT SEVEN AND SAID RIGHT OF WAY, A DISTANCE OF 120.15 FEET TO A ONE-HALF INCH IRON ROD WITH RED PLASTIC CAP MARKED "MAVERICK FIRM #10194514" (RPC) SET FOR THE NORTH NORTHEAST CORNER HEREOF;

THENCE S.30°54'15"W., A DISTANCE OF 300.00 FEET TO AN "RPC" SET FOR AN INTERIOR CORNER HEREOF;

THENCE S.59°05'27"E., A DISTANCE OF 701.14 FEET TO AN "RPC" SET ON THE WEST LINE OF SAID 80-FOOT WIDE DRAINAGE EASEMENT FOR THE EAST NORTHEAST CORNER HEREOF;

THENCE ALONG AND ACROSS SAID DRAINAGE EASEMENT THE FOLLOWING 4 CALLS:

1.) S.14°42'47"E., A DISTANCE OF 217.83 FEET TO AN "RPC" SET FOR AN INTERIOR CORNER HEREOF;
2.) N.75°16'29"E., A DISTANCE OF 79.54 FEET TO AN "RPC" SET FOR A CORNER HEREOF;
3.) S.14°42'04"E., A DISTANCE OF 80.00 FEET TO AN "RPC" SET FOR A CORNER HEREOF;
4.) S.75°16'29"W., A DISTANCE OF 79.52 FEET TO AN "RPC" SET FOR AN INTERIOR CORNER HEREOF;

THENCE S.14°42'47"E., CONTINUING ALONG SAID EASEMENT, 245.61 FEET TO THE **POINT OF BEGINNING**, CONTAINING 17.345 ACRES OF LAND.

ORDINANCE NO. _____

AN ORDINANCE EXTENDING THE BOUNDARIES OF THE CITY OF MIDLAND, TEXAS, BY ADDING THERETO A CERTAIN AREA ADJOINING THE PRESENT CITY LIMITS, BEING A 17.345-ACRE TRACT OF LAND OUT OF SECTION 35, BLOCK 40, T-1-S, T&P RR CO. SURVEY, MIDLAND COUNTY, TEXAS (GENERALLY LOCATED ON THE NORTH SIDE OF HIGHWAY 191, APPROXIMATELY 700 FEET WEST OF HIGHWAY 158); ORDERING PUBLICATION; AND ORDERING RECORDATION BY THE CITY SECRETARY

WHEREAS, a public hearing before the City Council of the City of Midland, Texas, a home rule municipal corporation, was held in the City Council Chamber on July 11, 2023, during which all interested persons were provided an opportunity to be heard on the proposed annexation of the hereinafter described territory; and

WHEREAS, notice of the public hearing was published on the City of Midland, Texas' Internet website on June 23, 2023, and the notice remained posted until the date of the public hearing; and

WHEREAS, notice of the public hearing was published in a newspaper having general circulation in the City of Midland, Texas, and in the below described territory, on June 23, 2023; and

WHEREAS, all required notices of the proposed annexation and the public hearing were given in accordance with applicable laws; and

WHEREAS, the City of Midland has entered into a written agreement with the owner(s) of the hereinafter described territory for the provision of services in said area;

NOW, THEREFORE, BE IT ORDAINED BY THE CITY COUNCIL OF THE CITY OF MIDLAND, TEXAS:

SECTION ONE. That the following described property adjoining the present boundary lines of the City of Midland, Texas, be and the same is hereby annexed to and incorporated within the boundary of the City of Midland, Texas:

Being a 17.345-acre tract of land out of Section 35, Block 40, T-1-S, T&P RR

Co. Survey, Midland County, Texas, and being more fully described by metes and bounds in the petition for annexation attached hereto as Exhibit "A" and incorporated herein by reference for all legal purposes.

SECTION TWO. That this ordinance shall be published in the official newspaper in the City of Midland, Texas, and the same shall not be effective until after the publication thereof.

SECTION THREE. That the City Secretary is hereby authorized and directed to file a certified copy of this ordinance with the County Clerk of Midland County, Texas, for the purpose of recording in the Deed Records of Midland County, Texas.

The above and foregoing ordinance was duly proposed, read in full and adopted on first reading, the _____ day of _____, A.D., 2023; and passed to second reading on motion of Council member _____, seconded by Council member _____, by the following vote:

Council members voting "AYE":

Council members voting "NAY":

The above and foregoing ordinance was read in full and finally adopted by the following vote upon motion of Council member _____, seconded by Council member _____, on the _____ day of _____, A.D., 2023, at a regular meeting of the City Council:

Council members voting "AYE":

Council members voting "NAY":

PASSED AND APPROVED THIS _____ day of _____, A.D., 2023.

_____
Lori Merritt Blong, Mayor

ATTEST:

_____
Marcia Bentley-German, City Secretary

APPROVED AS TO CONTENT
AND COMPLETENESS:

_____
Charles Harrington, Director of Development Services

APPROVED ONLY AS TO FORM:

_____
John Ohnemiller, City Attorney

EXHIBIT "A"

PETITION FOR ANNEXATION

Dear City of Midland:

As current owner of the tract of land described in Exhibit A, which is attached hereto and incorporated herein (the "Property"), **Bass Pro Outdoor World, L.L.C**, a Missouri limited liability company ("Owner"), submits this petition for annexation and hereby requests that the Property be added to and annexed to the City of Midland.

OWNER

By: _____
Signature

KG Kevin A. Maliszewski
Printed Name

CFO
Title

THE STATE OF Missouri §
§
COUNTY OF Greene §

This instrument was acknowledged before me on the 4th day of April, 2023, by Kevin Maliszewski in the capacity herein stated.

MY COMMISSION EXPIRES

8/5/2024

_____
Notary Public, State of Missouri

TAMMY L. CAMERON
Notary Public – Notary Seal
STATE OF MISSOURI
Greene County
My Commission Expires Aug. 5, 2024
Commission #12521666

EXHIBIT A TO PETITION FOR ANNEXATION

FIELD NOTE DESCRIPTION OF A 17.345 ACRE TRACT OF LAND, SITUATED IN SECTION 35, BLOCK 40, TOWNSHIP 1 SOUTH, TEXAS and PACIFIC RAILWAY COMPANY SURVEY, MIDLAND COUNTY, TEXAS, BEING A PORTION OF THAT SAME LAND AS DESCRIBED AS TRACT SEVEN IN A WARRANTY DEED FILED AS DOCUMENT NUMBER 2008-26873 IN VOLUME 3131 ON PAGE 210 OF THE OFFICIAL PUBLIC RECORDS (OPR) OF SAID MIDLAND COUNTY, TEXAS, AND BEING MORE PARTICULARLY DESCRIBED AS FOLLOWS;

COMMENCING AT N.(Y):10693732.66, E.(X):1726261.95, A POINT WITHIN A TXDOT TYPE I CONCRETE MONUMENT (TYPE I) FOUND AND ACCEPTED AS BEING ON THE NORTH RIGHT-OF-WAY LINE OF STATE HIGHWAY 191, AS DESCRIBED IN VOLUME 715 ON PAGE 287 OF SAID "OPR" AT THE SOUTHEAST CORNER OF A TRACT DESCRIBED AS AN 80-FOOT-WIDE DRAINAGE EASEMENT IN VOLUME 715 ON PAGE 280 OF SAID "OPR" AND BEING THE SOUTHWEST CORNER OF A CALLED 7.573 ACRE TRACT IN DOCUMENT NUMBER 2018-31010 OF SAID "OPR", **THENCE** S.75°15'20"W., ALONG SAID RIGHT-OF-WAY, 79.47 FEET TO A "TYPE I" FOUND FOR THE **POINT OF BEGINNING** AND THE SOUTHEAST CORNER HEREOF;

THENCE S.75°15'20"W., ALONG SAID RIGHT-OF-WAY, 724.82 FEET TO A "TYPE I" FOUND FOR AN ANGLE CORNER HEREOF;

THENCE S.71°08'16"W., ALONG SAID RIGHT-OF-WAY, 80.97 FEET TO A POINT THAT BEARS S.14°44'01"E., 0.31 FEET FROM A ONE HALF INCH IRON ROD WITH A PLASTIC CAP MARKED "WAI 5714" (WAI) FOR THE SOUTHWEST CORNER HEREOF;

THENCE N.14°44'01"W., ACROSS SAID TRACT SEVEN, 742.30 FEET TO A "WAI" FOUND FOR THE POINT OF CURVATURE FOR A CURVE TO THE LEFT HAVING A RADIUS OF 220.00 FEET AND A CHORD BEARING AND DISTANCE OF N.22°58'18"W., 62.86 FEET;

THENCE ALONG THE ARC OF SAID CURVE 63.08 FEET TO A "WAI" FOUND FOR A POINT OF DEFLECTION HEREOF;

THENCE N.79°38'54"W., 30.25 FEET TO A "WAI" FOUND FOR AN ANGLE CORNER HEREOF;

THENCE N.30°32'30"W., 99.89 FEET TO A "WAI" FOUND FOR A POINT OF DEFLECTION AND THE POINT OF CURVATURE FOR A CURVE TO THE NORTHEAST HAVING A RADIUS OF 550.00 FEET AND A CHORD BEARING AND DISTANCE OF N.45°10'40"E., 271.48 FEET FOR THE NORTHWEST CORNER HEREOF;

THENCE ALONG THE ARC OF SAID CURVE 274.32 FEET TO A "WAI" FOUND FOR A POINT OF TANGENCY HEREOF;

THENCE N.30°55'14"E., 384.19 FEET TO A ONE HALF INCH IRON ROD FOUND FOR A CUTBACK CORNER HEREOF;

THENCE N.14°40'14"W., 28.28 FEET TO A POINT ON THE SOUTHWEST RIGHT-OF-WAY LINE OF STATE HIGHWAY 158, BEING THE NORTHEAST LINE OF SAID "TRACT SEVEN" THAT BEARS S.69°42'03"W., 0.23 FEET FROM A ONE HALF INCH IRON ROD, FOR THE NORTH CORNER HEREOF;

THENCE S.59°05'27"E., ALONG SAID TRACT SEVEN AND SAID RIGHT OF WAY, A DISTANCE OF 120.15 FEET TO A ONE-HALF INCH IRON ROD WITH RED PLASTIC CAP MARKED "MAVERICK FIRM #10194514" (RPC) SET FOR THE NORTH NORTHEAST CORNER HEREOF;

THENCE S.30°54'15"W., A DISTANCE OF 300.00 FEET TO AN "RPC" SET FOR AN INTERIOR CORNER HEREOF;

THENCE S.59°05'27"E., A DISTANCE OF 701.14 FEET TO AN "RPC" SET ON THE WEST LINE OF SAID 80-FOOT WIDE DRAINAGE EASEMENT FOR THE EAST NORTHEAST CORNER HEREOF;

THENCE ALONG AND ACROSS SAID DRAINAGE EASEMENT THE FOLLOWING 4 CALLS:

1.) S.14°42'47"E., A DISTANCE OF 217.83 FEET TO AN "RPC" SET FOR AN INTERIOR CORNER HEREOF;
2.) N.75°16'29"E., A DISTANCE OF 79.54 FEET TO AN "RPC" SET FOR A CORNER HEREOF;
3.) S.14°42'04"E., A DISTANCE OF 80.00 FEET TO AN "RPC" SET FOR A CORNER HEREOF;
4.) S.75°16'29"W., A DISTANCE OF 79.52 FEET TO AN "RPC" SET FOR AN INTERIOR CORNER HEREOF;

THENCE S.14°42'47"E., CONTINUING ALONG SAID EASEMENT, 245.61 FEET TO THE **POINT OF BEGINNING**, CONTAINING 17.345 ACRES OF LAND.

MIDLAND
Planning Division

Annexation/Initial Zoning Application

Project Number: A-23-0033
Case Number: Z-23-0329

Applicant *(if acting as Agent, see affidavit on page 2)* Printed Name: Charles Hodges		Phone (972) 387-1000 Email chodges@hodgesusa.com	
Address 13642 Omega Road	City Dallas	State Texas	Zip 75244

Property Owner Printed Name: Bass Pro Outdoor World, L.L.C.		Phone (972) 387-1000 Email CRGreene@basspro.com	
Address 2500 E. Kearney	City Springfield	State Missouri	Zip 65898

Representative *(if different from Applicant or Property Owner)* Firm: _____ Printed Name: Charles Hodges		Phone (972) 387-1000 Email	
Address	City	State	Zip

Street Address: N/A... 17.345 Acre Tract of Land at Northwest Corner of Hwys 158 and 191

Legal Description
Lot: Section 35 Block: 40 Subdivision: Township 1 South, Texas

Current Zoning: N/A	**Proposed Zone:** Mixed Use/Commercial *(List by tracts if more than one district is requested)*

Reason for Annexation/Zone Change Request:
Provision of City Services and Economic Incentives

Present Use of Property: Agricultural

Proposed Use of Property: Mixed USe Development

How would this annexation/zone change affect the public health, safety and welfare?
Increasing City Rvenue, attracting tourism, etc.

Describe how this annexation/zone change will affect adjacent properties:
Will add value to all surrounding properties

Submittal and Fees
Items to be submitted with this application form:

- Application Fee – Payable to the 'City of Midland'
- Dimensioned Site Plan
- Digital Copies of Site Plan (PDF/JPEG)

Signature *(by property owner only – authorized agent must sign affidavit below)*	
Applicant (signature): Charles M. Hodges	Date: April 13, 2023
Applicant (printed): Charles Hodges	
Property Owner (signature): CMH	Date: April 13, 2023
Property Owner (printed) : Bass Pro Outdoor World, L.L.C	

The Annexation/Initial Zoning shall be considered officially received in the Planning office only when it has been submitted in full compliance with the provisions of Section 212 of the Texas Local Government Code and the Zoning Code of Ordinances of the City of Midland and when such required items for the application are also received.

All materials, including exhibits, submitted in support of an application, or displayed during a public hearing, shall remain the property of the City of Midland.

If an agent is authorized by the property owner to file and execute the application on behalf of the property owner, the agent must complete the affidavit below.

STATE OF TEXAS
COUNTY OF ~~MIDLAND~~ DALLAS

Before me, the undersigned authority, on this day personally appeared Charles M. Hodges who, being by me duly sworn, upon oath says: That (s)he is authorized by Bass Pro Outdoor World the owner of the above described property, to fully represent him/her in this application and that (s)he had the legal right, power and authority to sign said owner's name hereto as his/her attorney in fact.

Charles M Hodges
Authorized Agent (*signature*)

Subscribed and sworn to before me, this 18th day of April, 2023, to certify which witness my hand and seal of office.

TRESSA CAROLINE CULBERTSON
NOTARY PUBLIC STATE OF TEXAS
ID #131965060
My Commission Expires
April 09, 2027

TC
NOTARY PUBLIC, ~~MIDLAND COUNTY~~, TEXAS
DALLAS COUNTY

FOR OFFICE USE ONLY

☑ Property Owner Authorization	☐ Metes and Bounds (Sealed by Surveyor)
☒ Application Fee waived.	☑ Files in Digital Format (PDF/JPEG)
Check #_____	☑ Petition
Received By:	Date:

****Application will not be considered for scheduling until reviewed by a planner.****

PETITION FOR ANNEXATION

Dear City of Midland:

As current owner of the tract of land described in Exhibit A, which is attached hereto and incorporated herein (the "Property"), **Bass Pro Outdoor World, L.L.C,** a Missouri limited liability company ("Owner"), submits this petition for annexation and hereby requests that the Property be added to and annexed to the City of Midland.

OWNER

By: _____
Signature

MG Kevin A. Maliszewski
Printed Name

CFO
Title

THE STATE OF Missouri §
§
COUNTY OF Greene §

This instrument was acknowledged before me on the 4th day of April, 2023, by Kevin Maliszewski in the capacity herein stated.

MY COMMISSION EXPIRES

8/5/2024

_____
Notary Public, State of Missouri

TAMMY L. CAMERON
Notary Public – Notary Seal
STATE OF MISSOURI
Greene County
My Commission Expires Aug. 5, 2024
Commission #12521666

EXHIBIT A TO PETITION FOR ANNEXATION

FIELD NOTE DESCRIPTION OF A 17.345 ACRE TRACT OF LAND, SITUATED IN SECTION 35, BLOCK 40, TOWNSHIP 1 SOUTH, TEXAS and PACIFIC RAILWAY COMPANY SURVEY, MIDLAND COUNTY, TEXAS, BEING A PORTION OF THAT SAME LAND AS DESCRIBED AS TRACT SEVEN IN A WARRANTY DEED FILED AS DOCUMENT NUMBER 2008-26873 IN VOLUME 3131 ON PAGE 210 OF THE OFFICIAL PUBLIC RECORDS (OPR) OF SAID MIDLAND COUNTY, TEXAS, AND BEING MORE PARTICULARLY DESCRIBED AS FOLLOWS;

COMMENCING AT N.(Y):10693732.66, E.(X):1726261.95, A POINT WITHIN A TXDOT TYPE I CONCRETE MONUMENT (TYPE I) FOUND AND ACCEPTED AS BEING ON THE NORTH RIGHT-OF-WAY LINE OF STATE HIGHWAY 191, AS DESCRIBED IN VOLUME 715 ON PAGE 287 OF SAID "OPR" AT THE SOUTHEAST CORNER OF A TRACT DESCRIBED AS AN 80-FOOT-WIDE DRAINAGE EASEMENT IN VOLUME 715 ON PAGE 280 OF SAID "OPR" AND BEING THE SOUTHWEST CORNER OF A CALLED 7.573 ACRE TRACT IN DOCUMENT NUMBER 2018-31010 OF SAID "OPR", THENCE S.75°15'20"W., ALONG SAID RIGHT-OF-WAY, 79.47 FEET TO A "TYPE I" FOUND FOR THE POINT OF BEGINNING AND THE SOUTHEAST CORNER HEREOF;

THENCE S.75°15'20"W., ALONG SAID RIGHT-OF-WAY, 724.82 FEET TO A "TYPE I" FOUND FOR AN ANGLE CORNER HEREOF;

THENCE S.71°08'16"W., ALONG SAID RIGHT-OF-WAY, 80.97 FEET TO A POINT THAT BEARS S.14°44'01"E., 0.31 FEET FROM A ONE HALF INCH IRON ROD WITH A PLASTIC CAP MARKED "WAI 5714" (WAI) FOR THE SOUTHWEST CORNER HEREOF;

THENCE N.14°44'01"W., ACROSS SAID TRACT SEVEN, 742.30 FEET TO A "WAI" FOUND FOR THE POINT OF CURVATURE FOR A CURVE TO THE LEFT HAVING A RADIUS OF 220.00 FEET AND A CHORD BEARING AND DISTANCE OF N.22°58'18"W., 62.86 FEET;

THENCE ALONG THE ARC OF SAID CURVE 63.08 FEET TO A "WAI" FOUND FOR A POINT OF DEFLECTION HEREOF;

THENCE N.79°38'54"W., 30.25 FEET TO A "WAI" FOUND FOR AN ANGLE CORNER HEREOF;

THENCE N.30°32'30"W., 99.89 FEET TO A "WAI" FOUND FOR A POINT OF DEFLECTION AND THE POINT OF CURVATURE FOR A CURVE TO THE NORTHEAST HAVING A RADIUS OF 550.00 FEET AND A CHORD BEARING AND DISTANCE OF N.45°10'40"E., 271.48 FEET FOR THE NORTHWEST CORNER HEREOF;

THENCE ALONG THE ARC OF SAID CURVE 274.32 FEET TO A "WAI" FOUND FOR A POINT OF TANGENCY HEREOF;

THENCE N.30°55'14"E., 384.19 FEET TO A ONE HALF INCH IRON ROD FOUND FOR A CUTBACK CORNER HEREOF;

THENCE N.14°40'14"W., 28.28 FEET TO A POINT ON THE SOUTHWEST RIGHT-OF-WAY LINE OF STATE HIGHWAY 158, BEING THE NORTHEAST LINE OF SAID "TRACT SEVEN" THAT BEARS S.69°42'03"W., 0.23 FEET FROM A ONE HALF INCH IRON ROD, FOR THE NORTH CORNER HEREOF;

THENCE S.59°05'27"E., ALONG SAID TRACT SEVEN AND SAID RIGHT OF WAY, A DISTANCE OF 120.15 FEET TO A ONE-HALF INCH IRON ROD WITH RED PLASTIC CAP MARKED "MAVERICK FIRM #10194514" (RPC) SET FOR THE NORTH NORTHEAST CORNER HEREOF;

THENCE S.30°54'15"W., A DISTANCE OF 300.00 FEET TO AN "RPC" SET FOR AN INTERIOR CORNER HEREOF;

THENCE S.59°05'27"E., A DISTANCE OF 701.14 FEET TO AN "RPC" SET ON THE WEST LINE OF SAID 80-FOOT WIDE DRAINAGE EASEMENT FOR THE EAST NORTHEAST CORNER HEREOF;

THENCE ALONG AND ACROSS SAID DRAINAGE EASEMENT THE FOLLOWING 4 CALLS:

1.) S.14°42'47"E., A DISTANCE OF 217.83 FEET TO AN "RPC" SET FOR AN INTERIOR CORNER HEREOF;
2.) N.75°16'29"E., A DISTANCE OF 79.54 FEET TO AN "RPC" SET FOR A CORNER HEREOF;
3.) S.14°42'04"E., A DISTANCE OF 80.00 FEET TO AN "RPC" SET FOR A CORNER HEREOF;
4.) S.75°16'29"W., A DISTANCE OF 79.52 FEET TO AN "RPC" SET FOR AN INTERIOR CORNER HEREOF;

THENCE S.14°42'47"E., CONTINUING ALONG SAID EASEMENT, 245.61 FEET TO THE POINT OF BEGINNING, CONTAINING 17.345 ACRES OF LAND.

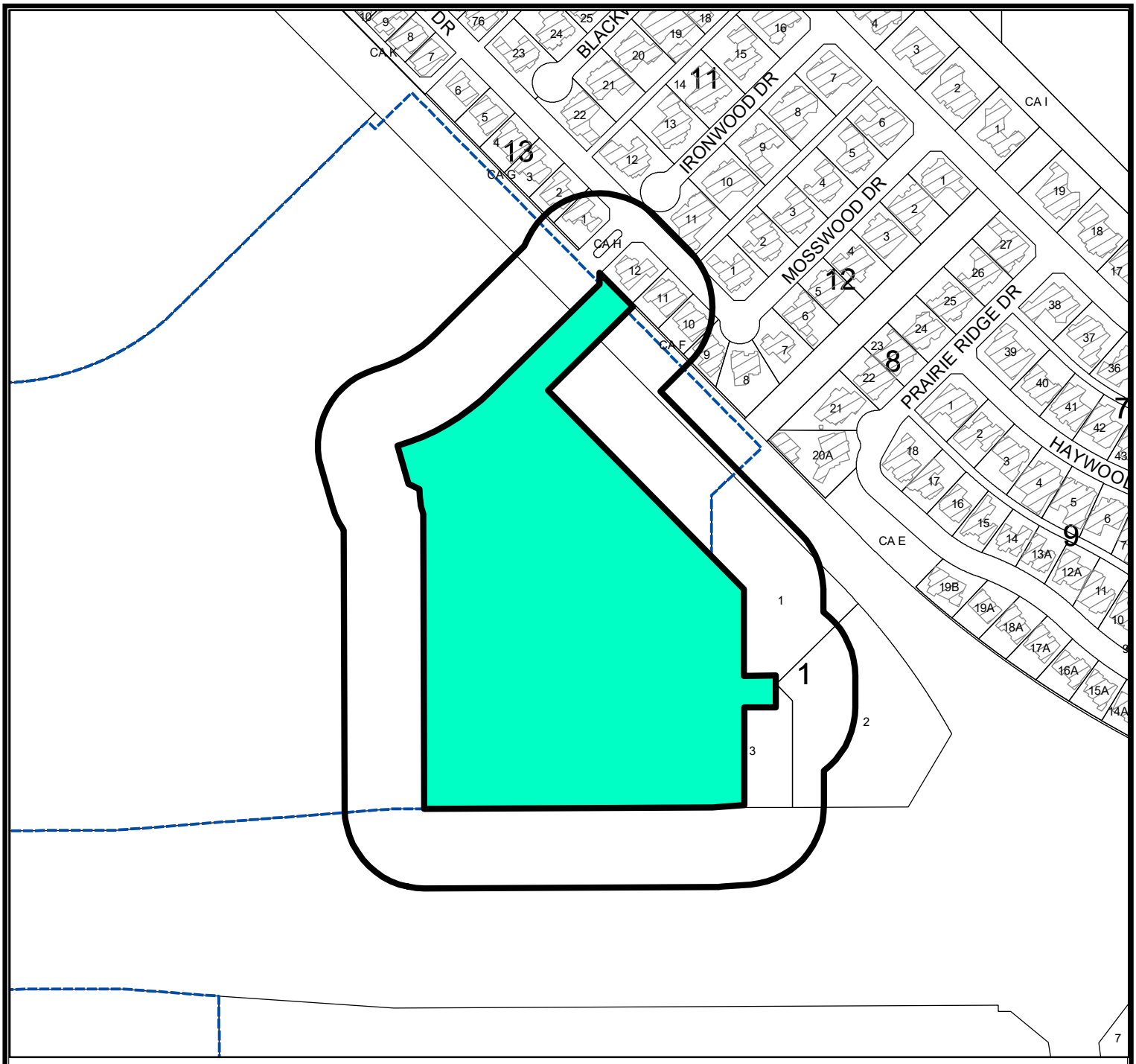

LOCATION MAP

A-23-0033 **Scale: 1" = 200'**

A 17.345-acre tract of land located in Section 35, Block 40, T-1-S, T&P RR. Co Survey, Midland County, Texas.

Generally located on the northwest corner of Highway 191, approximately 700-feet west of Highway 158 - (Extraterritorial Jurisdition)

PACKET 18.21

LEGEND

- CITY LIMITS
- PARCEL
- PRIVATE BLDGS



©THE CITY OF MIDLAND - 2021

THIS DATA IS NOT A SUBSTITUTION FOR A SURVEY AND NOR IS IT DESIGNED TO BE USED AS A PRIMARY TOOL IN PERMITTING OR OTHER DECISIONS BASED SOLELY ON THE INFORMATION CONTAINED HEREIN.

THE CITY OF MIDLAND SHALL NOT BE RESPONSIBLE FOR ANY DECISIONS BASED UPON THE USE OF THIS DATA.

July 12, 2022









City Council Meeting

Item Number: 19

Meeting Date: July 11, 2023

To: City Council / City Manager

From: Alexandra Walling, Senior Planner

Subject: AN ORDINANCE ESTABLISHING THE INITIAL ZONING CLASSIFIATION OF THE AREA INDICATED AS BEING A 17.345-ACRE TRACT OF LAND OUT OF SECTION 35, BLOCK 40, T-1-S, T&P RR CO. SURVEY, MIDLAND COUNTY, TEXAS, AS AN RR, REGIONAL RETAIL DISTRICT; SAID TRACT BEING GENERALLY LOCATED ON THE NORTH SIDE OF STATE HIGHWAY 191, APPROXIMATELY 700 FEET WEST OF STATE HIGHWAY 158; CONTAINING A CUMULATIVE CLAUSE; CONTAINING A SAVINGS AND SEVERABILITY CLAUSE; PROVIDING FOR A MAXIMUM PENALTY OR FINE OF TWO THOUSAND DOLLARS ($2,000.00); AND ORDERING PUBLICATION (DISTRICT: NONE) (DEVELOPMENT SERVICES)

Purpose:

The applicant, Charles Hodges, is requesting the initial zoning of RR, Regional Retail of a 17.345-acre tract of land out of Section 35, Block 40, T-1-S, T&P RR Co. Survey, Midland County, Texas. An associated annexation is also in review.

The Planning and Zoning Commission reviewed this request on June 20, 2023, and recommended approval.

Recommended City Council Action:

Approve

Fiscal Impact:

Additional land to be developed under City regulations in an expanded growth area.

Discussion:

The applicant, Charles Hodges, is requesting an initial zoning of the annexed land to RR, Regional Retail District.

The site is currently in the process of being annexed into City Limits as well as in the process of being platted.

This project has been circulated to all respective departments for internal review and received no objections.

Engineering: (Approved)

No objections to zoning/zone change. [For Applicant's Information Only.]

Transportation: (Approved)

Site drainage, utilities, driveway access, and traffic circulation may be adjusted during construction drawing review as necessary to receive building permit approval from Engineering and Traffic Operations. [For the Applicant's information only.]

No objection to zone change. [For the Applicant's information only.]

Fire: (Approved)

No objection.

Code Administration: (Approved)

No Objection.

Oil and Gas: (Approved)

No Oil and Gas Issues. Informational: No Oil or Gas wells identified within 500 ft. permitted well radius or in the 135 ft. non-permitted well radius of location on plat. Please note if oil & gas wells are not identified or left off plat, this could prevent receiving city permits for structures. Any plugged and abandoned (P&A) well would need to be identified. No construction is allowed on top of P&A wells.

GIS: (Approved)

No comment.

Planning:

The Future Land Use Map in the Tall City Tomorrow Comprehensive Plan calls for Urban-Medium (U-M) and Urban-High (U-H) utilization in this area which represents commercial land uses, single-family dwellings, and high connectivity with good access to highways, freeways, and arterial roads.

As this proposed initial zoning conforms to the Tall City Tomorrow Comprehensive Plan, staff recommends approval of this initial zoning of RR, Regional Retail District subject to condition A.

Condition(s):

A. That the use and development of this property shall conform to the regulations of the RR, Regional Retail District.

Letters of Objection:

As of June 28, 2023, staff has received no letters of objection to this request.

Attachments:

Application
Petition (Exhibit A)
Maps

Morris Williams Jr.

City Manager's Office

ORDINANCE NO. _____

AN ORDINANCE ESTABLISHING THE INITIAL ZONING CLASSIFICATION OF THE AREA INDICATED AS BEING A 17.345-ACRE TRACT OF LAND OUT OF SECTION 35, BLOCK 40, T-1-S, T&P RR CO. SURVEY, MIDLAND COUNTY, TEXAS, AS AN RR, REGIONAL RETAIL DISTRICT; SAID TRACT BEING GENERALLY LOCATED ON THE NORTH SIDE OF HIGHWAY 191, APPROXIMATELY 700 FEET WEST OF HIGHWAY 158; CONTAINING A CUMULATIVE CLAUSE; CONTAINING A SAVINGS AND SEVERABILITY CLAUSE; PROVIDING FOR A MAXIMUM PENALTY OR FINE OF TWO THOUSAND DOLLARS ($2,000.00); AND ORDERING PUBLICATION

WHEREAS, notice has been given to all parties in interest and citizens by publication in the official newspaper and otherwise of a public hearing to be held before the City Council on July 11, 2023 (the "Hearing Date"), to consider an amendment to the Zoning District Map of the City of Midland, Texas, so as to establish the initial zoning classification of the property described in Section One hereof as an RR, Regional Retail District, as set out in Title XI, Chapter 1 of the City Code of Midland, Texas; and

WHEREAS, such a public hearing was held in the Council Chambers on the Hearing Date, as advertised; and

WHEREAS, after a full hearing, at which all parties in interest and citizens were given an opportunity to be heard; and after considering among other things, the character of the property involved and the surrounding area and its peculiar suitability for particular uses; and with a view to conserving the value of buildings and encouraging the most appropriate use of land throughout such municipality, the Council finds it to be in the best interest of the health, safety, morals and general welfare of the City of Midland to amend the Zoning District Map accordingly;

NOW, THEREFORE, BE IT ORDAINED BY THE CITY COUNCIL OF THE CITY OF MIDLAND, TEXAS:

SECTION ONE. That the initial zoning classification of the area indicated on Exhibit "A", attached hereto and incorporated herein by reference, is hereby established as

a RR, Regional Retail District, and the Zoning District Map of the City of Midland, Texas, is hereby amended to reflect the establishment of this initial zoning classification.

SECTION TWO. The provisions of this ordinance are to be cumulative of all other ordinances or parts of ordinances governing or regulating the same subject matter as that covered herein; provided, however, that all prior ordinances or parts of ordinances inconsistent with or in conflict with any of the provisions of this ordinance are hereby expressly repealed to the extent of any such inconsistency or conflict.

SECTION THREE. If any section, subsection, sentence, clause or phrase of this ordinance is, for any reason, held to be unconstitutional or invalid, such holding shall not affect the validity of the remaining portions of this ordinance. The Council of the City of Midland hereby declares that it would have passed this ordinance and each section, subsection, sentence, clause, or phrase hereof irrespective of the fact that any one or more sections, subsections, sentences, clauses, or phrases be declared unconstitutional or invalid.

SECTION FOUR. The penalty for violation of this ordinance shall be in accordance with the general penalty provisions contained in Section 1-3-1 of the City Code of Midland, Texas, which provides for a fine not exceeding two thousand dollars ($2,000.00).

SECTION FIVE. The City Secretary is hereby authorized and directed to publish the descriptive caption of this ordinance in the manner and for the length of time prescribed by the law as an alternative method of publication.

The above and foregoing ordinance was duly proposed, read in full and adopted on first reading, the ___day of _____, A.D., 2023; and passed to second reading on motion of Council member _____, seconded by Council member _____, by the following vote:

Council members voting "AYE":

Council members voting "NAY":

The above and foregoing ordinance was read in full and finally adopted by the following vote upon motion of Council member _____, seconded by Council member _____, on the ___ day of _____, A.D., 2023, at a regular meeting of the City Council:

Council members voting "AYE":

Council members voting "NAY":

PASSED AND APPROVED THIS _____ day of _____, A.D., 2023.

_____
Lori Merritt Blong, Mayor

ATTEST:

_____
Marcia Bentley-German, City Secretary

APPROVED AS TO CONTENT
AND COMPLETENESS:

_____
Charles Harrington, Director of Development Services

APPROVED ONLY AS TO FORM:

_____
John Ohnemiller, City Attorney

EXHIBIT "A"

PETITION FOR ANNEXATION

Dear City of Midland:

As current owner of the tract of land described in Exhibit A, which is attached hereto and incorporated herein (the "Property"), **Bass Pro Outdoor World, L.L.C**, a Missouri limited liability company ("Owner"), submits this petition for annexation and hereby requests that the Property be added to and annexed to the City of Midland.

OWNER

By: _____
Signature

AR Kevin A. Maliszewski
Printed Name

CFO
Title

THE STATE OF Missouri §
§
COUNTY OF Greene §

This instrument was acknowledged before me on the 4th day of April, 2023, by Kevin Maliszewski in the capacity herein stated.

MY COMMISSION EXPIRES

8/5/2024

_____
Notary Public, State of Missouri

TAMMY L. CAMERON
Notary Public – Notary Seal
STATE OF MISSOURI
Greene County
My Commission Expires Aug. 5, 2024
Commission #12521666

EXHIBIT A TO PETITION FOR ANNEXATION

FIELD NOTE DESCRIPTION OF A 17.345 ACRE TRACT OF LAND, SITUATED IN SECTION 35, BLOCK 40, TOWNSHIP 1 SOUTH, TEXAS and PACIFIC RAILWAY COMPANY SURVEY, MIDLAND COUNTY, TEXAS, BEING A PORTION OF THAT SAME LAND AS DESCRIBED AS TRACT SEVEN IN A WARRANTY DEED FILED AS DOCUMENT NUMBER 2008-26873 IN VOLUME 3131 ON PAGE 210 OF THE OFFICIAL PUBLIC RECORDS (OPR) OF SAID MIDLAND COUNTY, TEXAS, AND BEING MORE PARTICULARLY DESCRIBED AS FOLLOWS;

COMMENCING AT N.(Y):10693732.66, E.(X):1726261.95, A POINT WITHIN A TXDOT TYPE I CONCRETE MONUMENT (TYPE I) FOUND AND ACCEPTED AS BEING ON THE NORTH RIGHT-OF-WAY LINE OF STATE HIGHWAY 191, AS DESCRIBED IN VOLUME 715 ON PAGE 287 OF SAID "OPR" AT THE SOUTHEAST CORNER OF A TRACT DESCRIBED AS AN 80-FOOT-WIDE DRAINAGE EASEMENT IN VOLUME 715 ON PAGE 280 OF SAID "OPR" AND BEING THE SOUTHWEST CORNER OF A CALLED 7.573 ACRE TRACT IN DOCUMENT NUMBER 2018-31010 OF SAID "OPR", **THENCE** S.75°15'20"W., ALONG SAID RIGHT-OF-WAY, 79.47 FEET TO A "TYPE I" FOUND FOR THE **POINT OF BEGINNING** AND THE SOUTHEAST CORNER HEREOF;

THENCE S.75°15'20"W., ALONG SAID RIGHT-OF-WAY, 724.82 FEET TO A "TYPE I" FOUND FOR AN ANGLE CORNER HEREOF;

THENCE S.71°08'16"W., ALONG SAID RIGHT-OF-WAY, 80.97 FEET TO A POINT THAT BEARS S.14°44'01"E., 0.31 FEET FROM A ONE HALF INCH IRON ROD WITH A PLASTIC CAP MARKED "WAI 5714" (WAI) FOR THE SOUTHWEST CORNER HEREOF;

THENCE N.14°44'01"W., ACROSS SAID TRACT SEVEN, 742.30 FEET TO A "WAI" FOUND FOR THE POINT OF CURVATURE FOR A CURVE TO THE LEFT HAVING A RADIUS OF 220.00 FEET AND A CHORD BEARING AND DISTANCE OF N.22°58'18"W., 62.86 FEET;

THENCE ALONG THE ARC OF SAID CURVE 63.08 FEET TO A "WAI" FOUND FOR A POINT OF DEFLECTION HEREOF;

THENCE N.79°38'54"W., 30.25 FEET TO A "WAI" FOUND FOR AN ANGLE CORNER HEREOF;

THENCE N.30°32'30"W., 99.89 FEET TO A "WAI" FOUND FOR A POINT OF DEFLECTION AND THE POINT OF CURVATURE FOR A CURVE TO THE NORTHEAST HAVING A RADIUS OF 550.00 FEET AND A CHORD BEARING AND DISTANCE OF N.45°10'40"E., 271.48 FEET FOR THE NORTHWEST CORNER HEREOF;

THENCE ALONG THE ARC OF SAID CURVE 274.32 FEET TO A "WAI" FOUND FOR A POINT OF TANGENCY HEREOF;

THENCE N.30°55'14"E., 384.19 FEET TO A ONE HALF INCH IRON ROD FOUND FOR A CUTBACK CORNER HEREOF;

THENCE N.14°40'14"W., 28.28 FEET TO A POINT ON THE SOUTHWEST RIGHT-OF-WAY LINE OF STATE HIGHWAY 158, BEING THE NORTHEAST LINE OF SAID "TRACT SEVEN" THAT BEARS S.69°42'03"W., 0.23 FEET FROM A ONE HALF INCH IRON ROD, FOR THE NORTH CORNER HEREOF;

THENCE S.59°05'27"E., ALONG SAID TRACT SEVEN AND SAID RIGHT OF WAY, A DISTANCE OF 120.15 FEET TO A ONE-HALF INCH IRON ROD WITH RED PLASTIC CAP MARKED "MAVERICK FIRM #10194514" (RPC) SET FOR THE NORTH NORTHEAST CORNER HEREOF;

THENCE S.30°54'15"W., A DISTANCE OF 300.00 FEET TO AN "RPC" SET FOR AN INTERIOR CORNER HEREOF;

THENCE S.59°05'27"E., A DISTANCE OF 701.14 FEET TO AN "RPC" SET ON THE WEST LINE OF SAID 80-FOOT WIDE DRAINAGE EASEMENT FOR THE EAST NORTHEAST CORNER HEREOF;

THENCE ALONG AND ACROSS SAID DRAINAGE EASEMENT THE FOLLOWING 4 CALLS:

1.) S.14°42'47"E., A DISTANCE OF 217.83 FEET TO AN "RPC" SET FOR AN INTERIOR CORNER HEREOF;
2.) N.75°16'29"E., A DISTANCE OF 79.54 FEET TO AN "RPC" SET FOR A CORNER HEREOF;
3.) S.14°42'04"E., A DISTANCE OF 80.00 FEET TO AN "RPC" SET FOR A CORNER HEREOF;
4.) S.75°16'29"W., A DISTANCE OF 79.52 FEET TO AN "RPC" SET FOR AN INTERIOR CORNER HEREOF;

THENCE S.14°42'47"E., CONTINUING ALONG SAID EASEMENT, 245.61 FEET TO THE **POINT OF BEGINNING**, CONTAINING 17.345 ACRES OF LAND.

MIDLAND
Planning Division

Annexation/Initial Zoning Application

Project Number: A-23-0033
Case Number: Z-23-0329

Applicant *(if acting as Agent, see affidavit on page 2)* Printed Name: Charles Hodges		Phone (972) 387-1000 Email chodges@hodgesusa.com	
Address 13642 Omega Road	City Dallas	State Texas	Zip 75244

Property Owner Printed Name: Bass Pro Outdoor World, L.L.C.		Phone (972) 387-1000 Email CRGreene@basspro.com	
Address 2500 E. Kearney	City Springfield	State Missouri	Zip 65898

Representative *(if different from Applicant or Property Owner)* Firm: _____ Printed Name: Charles Hodges		Phone (972) 387-1000 Email	
Address	City	State	Zip

Street Address: N/A... 17.345 Acre Tract of Land at Northwest Corner of Hwys 158 and 191

Legal Description
Lot: Section 35 Block: 40 Subdivision: Township 1 South, Texas

Current Zoning: N/A	**Proposed Zone:** Mixed Use/Commercial *(List by tracts if more than one district is requested)*

Reason for Annexation/Zone Change Request:
Provision of City Services and Economic Incentives

Present Use of Property: Agricultural

Proposed Use of Property: Mixed USe Development

How would this annexation/zone change affect the public health, safety and welfare?
Increasing City Rvenue, attracting tourism, etc.

Describe how this annexation/zone change will affect adjacent properties:
Will add value to all surrounding properties

Submittal and Fees
Items to be submitted with this application form:

- Application Fee – Payable to the 'City of Midland'
- Dimensioned Site Plan
- Digital Copies of Site Plan (PDF/JPEG)

Signature *(by property owner only – authorized agent must sign affidavit below)*	
Applicant (signature): Charles M. Hodges	Date: April 13, 2023
Applicant (printed): Charles Hodges	
Property Owner (signature): BW	Date: April 13, 2023
Property Owner (printed) : Bass Pro Outdoor World, L.L.C	

The Annexation/Initial Zoning shall be considered officially received in the Planning office only when it has been submitted in full compliance with the provisions of Section 212 of the Texas Local Government Code and the Zoning Code of Ordinances of the City of Midland and when such required items for the application are also received.

All materials, including exhibits, submitted in support of an application, or displayed during a public hearing, shall remain the property of the City of Midland.

If an agent is authorized by the property owner to file and execute the application on behalf of the property owner, the agent must complete the affidavit below.

STATE OF TEXAS
COUNTY OF ~~MIDLAND~~ DALLAS

Before me, the undersigned authority, on this day personally appeared Charles M. Hodges who, being by me duly sworn, upon oath says: That (s)he is authorized by Bass Pro Outdoor World the owner of the above described property, to fully represent him/her in this application and that (s)he had the legal right, power and authority to sign said owner's name hereto as his/her attorney in fact.

Charles M Hodges
Authorized Agent (*signature*)

Subscribed and sworn to before me, this 18th day of April, 2023, to certify which witness my hand and seal of office.

TRESSA CAROLINE CULBERTSON
NOTARY PUBLIC STATE OF TEXAS
ID #131965060
My Commission Expires
April 09, 2027

NOTARY PUBLIC, ~~MIDLAND COUNTY~~, TEXAS
DALLAS COUNTY

FOR OFFICE USE ONLY	
☑ Property Owner Authorization	☐ Metes and Bounds (Sealed by Surveyor)
☒ Application Fee waived.	☑ Files in Digital Format (PDF/JPEG)
Check #_____	☑ Petition
Received By:	Date:

****Application will not be considered for scheduling until reviewed by a planner.****

PETITION FOR ANNEXATION

Dear City of Midland:

As current owner of the tract of land described in Exhibit A, which is attached hereto and incorporated herein (the "Property"), **Bass Pro Outdoor World, L.L.C,** a Missouri limited liability company ("Owner"), submits this petition for annexation and hereby requests that the Property be added to and annexed to the City of Midland.

OWNER

By: _____
Signature

KG Kevin A. Maliszewski
Printed Name

CFO
Title

THE STATE OF Missouri §
§
COUNTY OF Greene §

This instrument was acknowledged before me on the 4th day of April, 2023, by Kevin Maliszewski in the capacity herein stated.

MY COMMISSION EXPIRES

8/5/2024

_____
Notary Public, State of Missouri

TAMMY L. CAMERON
Notary Public – Notary Seal
STATE OF MISSOURI
Greene County
My Commission Expires Aug. 5, 2024
Commission #12521666

EXHIBIT A TO PETITION FOR ANNEXATION

FIELD NOTE DESCRIPTION OF A 17.345 ACRE TRACT OF LAND, SITUATED IN SECTION 35, BLOCK 40, TOWNSHIP 1 SOUTH, TEXAS and PACIFIC RAILWAY COMPANY SURVEY, MIDLAND COUNTY, TEXAS, BEING A PORTION OF THAT SAME LAND AS DESCRIBED AS TRACT SEVEN IN A WARRANTY DEED FILED AS DOCUMENT NUMBER 2008-26873 IN VOLUME 3131 ON PAGE 210 OF THE OFFICIAL PUBLIC RECORDS (OPR) OF SAID MIDLAND COUNTY, TEXAS, AND BEING MORE PARTICULARLY DESCRIBED AS FOLLOWS;

COMMENCING AT N.(Y):10693732.66, E.(X):1726261.95, A POINT WITHIN A TXDOT TYPE I CONCRETE MONUMENT (TYPE I) FOUND AND ACCEPTED AS BEING ON THE NORTH RIGHT-OF-WAY LINE OF STATE HIGHWAY 191, AS DESCRIBED IN VOLUME 715 ON PAGE 287 OF SAID "OPR" AT THE SOUTHEAST CORNER OF A TRACT DESCRIBED AS AN 80-FOOT-WIDE DRAINAGE EASEMENT IN VOLUME 715 ON PAGE 280 OF SAID "OPR" AND BEING THE SOUTHWEST CORNER OF A CALLED 7.573 ACRE TRACT IN DOCUMENT NUMBER 2018-31010 OF SAID "OPR", THENCE S.75°15'20"W., ALONG SAID RIGHT-OF-WAY, 79.47 FEET TO A "TYPE I" FOUND FOR THE POINT OF BEGINNING AND THE SOUTHEAST CORNER HEREOF;

THENCE S.75°15'20"W., ALONG SAID RIGHT-OF-WAY, 724.82 FEET TO A "TYPE I" FOUND FOR AN ANGLE CORNER HEREOF;

THENCE S.71°08'16"W., ALONG SAID RIGHT-OF-WAY, 80.97 FEET TO A POINT THAT BEARS S.14°44'01"E., 0.31 FEET FROM A ONE HALF INCH IRON ROD WITH A PLASTIC CAP MARKED "WAI 5714" (WAI) FOR THE SOUTHWEST CORNER HEREOF;

THENCE N.14°44'01"W., ACROSS SAID TRACT SEVEN, 742.30 FEET TO A "WAI" FOUND FOR THE POINT OF CURVATURE FOR A CURVE TO THE LEFT HAVING A RADIUS OF 220.00 FEET AND A CHORD BEARING AND DISTANCE OF N.22°58'18"W., 62.86 FEET;

THENCE ALONG THE ARC OF SAID CURVE 63.08 FEET TO A "WAI" FOUND FOR A POINT OF DEFLECTION HEREOF;

THENCE N.79°38'54"W., 30.25 FEET TO A "WAI" FOUND FOR AN ANGLE CORNER HEREOF;

THENCE N.30°32'30"W., 99.89 FEET TO A "WAI" FOUND FOR A POINT OF DEFLECTION AND THE POINT OF CURVATURE FOR A CURVE TO THE NORTHEAST HAVING A RADIUS OF 550.00 FEET AND A CHORD BEARING AND DISTANCE OF N.45°10'40"E., 271.48 FEET FOR THE NORTHWEST CORNER HEREOF;

THENCE ALONG THE ARC OF SAID CURVE 274.32 FEET TO A "WAI" FOUND FOR A POINT OF TANGENCY HEREOF;

THENCE N.30°55'14"E., 384.19 FEET TO A ONE HALF INCH IRON ROD FOUND FOR A CUTBACK CORNER HEREOF;

THENCE N.14°40'14"W., 28.28 FEET TO A POINT ON THE SOUTHWEST RIGHT-OF-WAY LINE OF STATE HIGHWAY 158, BEING THE NORTHEAST LINE OF SAID "TRACT SEVEN" THAT BEARS S.69°42'03"W., 0.23 FEET FROM A ONE HALF INCH IRON ROD, FOR THE NORTH CORNER HEREOF;

THENCE S.59°05'27"E., ALONG SAID TRACT SEVEN AND SAID RIGHT OF WAY, A DISTANCE OF 120.15 FEET TO A ONE-HALF INCH IRON ROD WITH RED PLASTIC CAP MARKED "MAVERICK FIRM #10194514" (RPC) SET FOR THE NORTH NORTHEAST CORNER HEREOF;

THENCE S.30°54'15"W., A DISTANCE OF 300.00 FEET TO AN "RPC" SET FOR AN INTERIOR CORNER HEREOF;

THENCE S.59°05'27"E., A DISTANCE OF 701.14 FEET TO AN "RPC" SET ON THE WEST LINE OF SAID 80-FOOT WIDE DRAINAGE EASEMENT FOR THE EAST NORTHEAST CORNER HEREOF;

THENCE ALONG AND ACROSS SAID DRAINAGE EASEMENT THE FOLLOWING 4 CALLS:

1.) S.14°42'47"E., A DISTANCE OF 217.83 FEET TO AN "RPC" SET FOR AN INTERIOR CORNER HEREOF;
2.) N.75°16'29"E., A DISTANCE OF 79.54 FEET TO AN "RPC" SET FOR A CORNER HEREOF;
3.) S.14°42'04"E., A DISTANCE OF 80.00 FEET TO AN "RPC" SET FOR A CORNER HEREOF;
4.) S.75°16'29"W., A DISTANCE OF 79.52 FEET TO AN "RPC" SET FOR AN INTERIOR CORNER HEREOF;

THENCE S.14°42'47"E., CONTINUING ALONG SAID EASEMENT, 245.61 FEET TO THE POINT OF BEGINNING, CONTAINING 17.345 ACRES OF LAND.

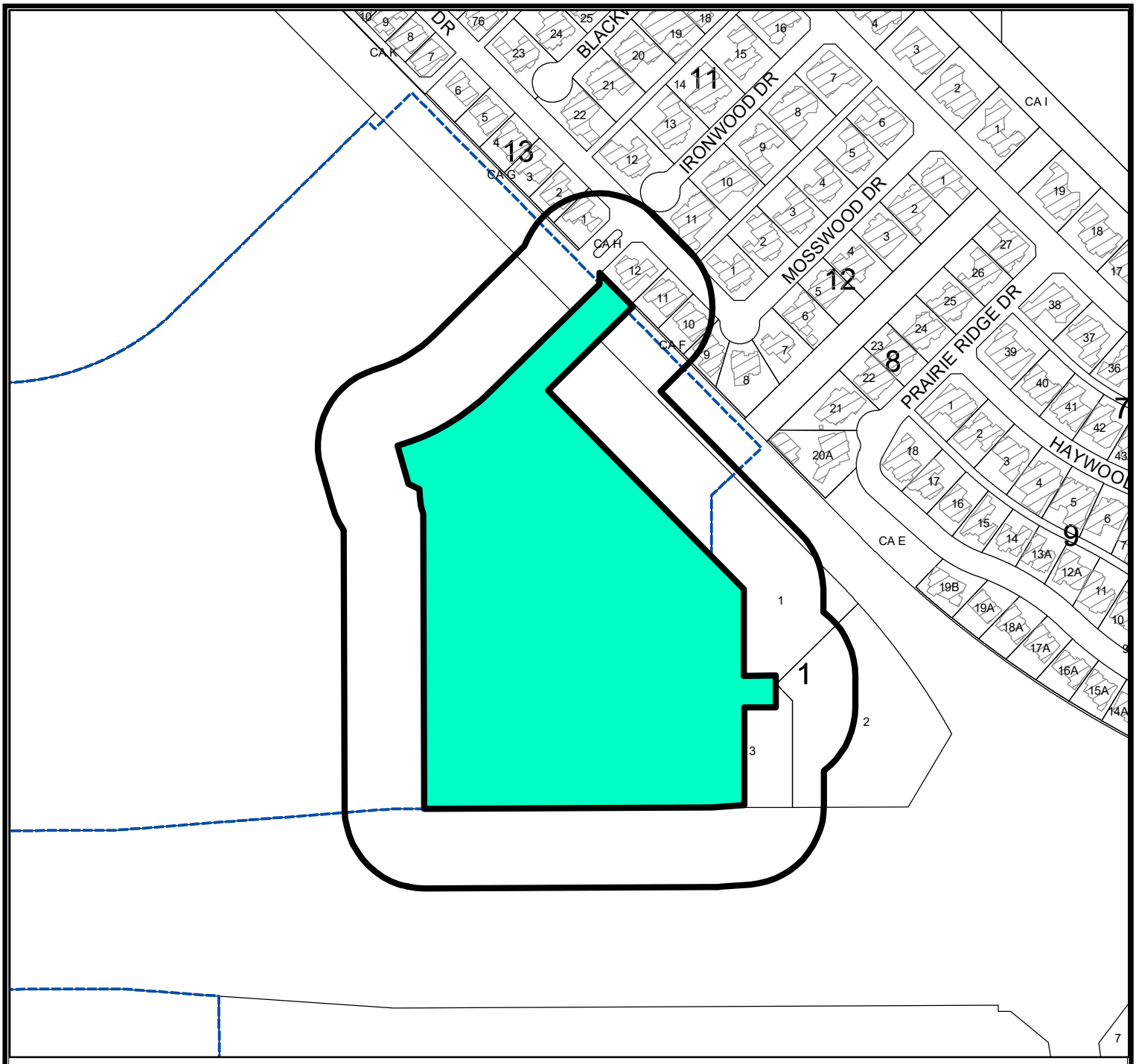

LOCATION MAP

Z-23-0329 **Scale: 1" = 200'**

An initial zoning of RR, Regional Retail District on a 17.345-acre tract of land located in Section 35, Block 40, T-1-S, T&P RR. Co Survey, Midland County, Texas.

Generally located on the northwest corner of Highway 191, approximately 700-feet west of Highway 158 (Extraterritorial Jurisdition)

LEGEND

- CITY LIMITS
- PARCEL
- PRIVATE BLDGS

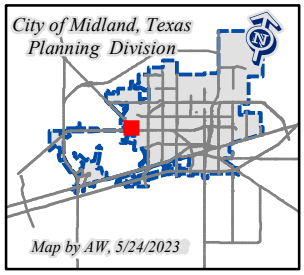

©THE CITY OF MIDLAND - 2021
THIS DATA IS NOT A SUBSTITUTION FOR A SURVEY AND NOR IS IT DESIGNED TO BE USED AS A PRIMARY TOOL IN PERMITTING OR OTHER DECISIONS BASED SOLELY ON THE INFORMATION CONTAINED HEREIN.
THE CITY OF MIDLAND SHALL NOT BE RESPONSIBLE FOR ANY DECISIONS BASED UPON THE USE OF THIS DATA.

58 AC 19.15

July 11, 2023

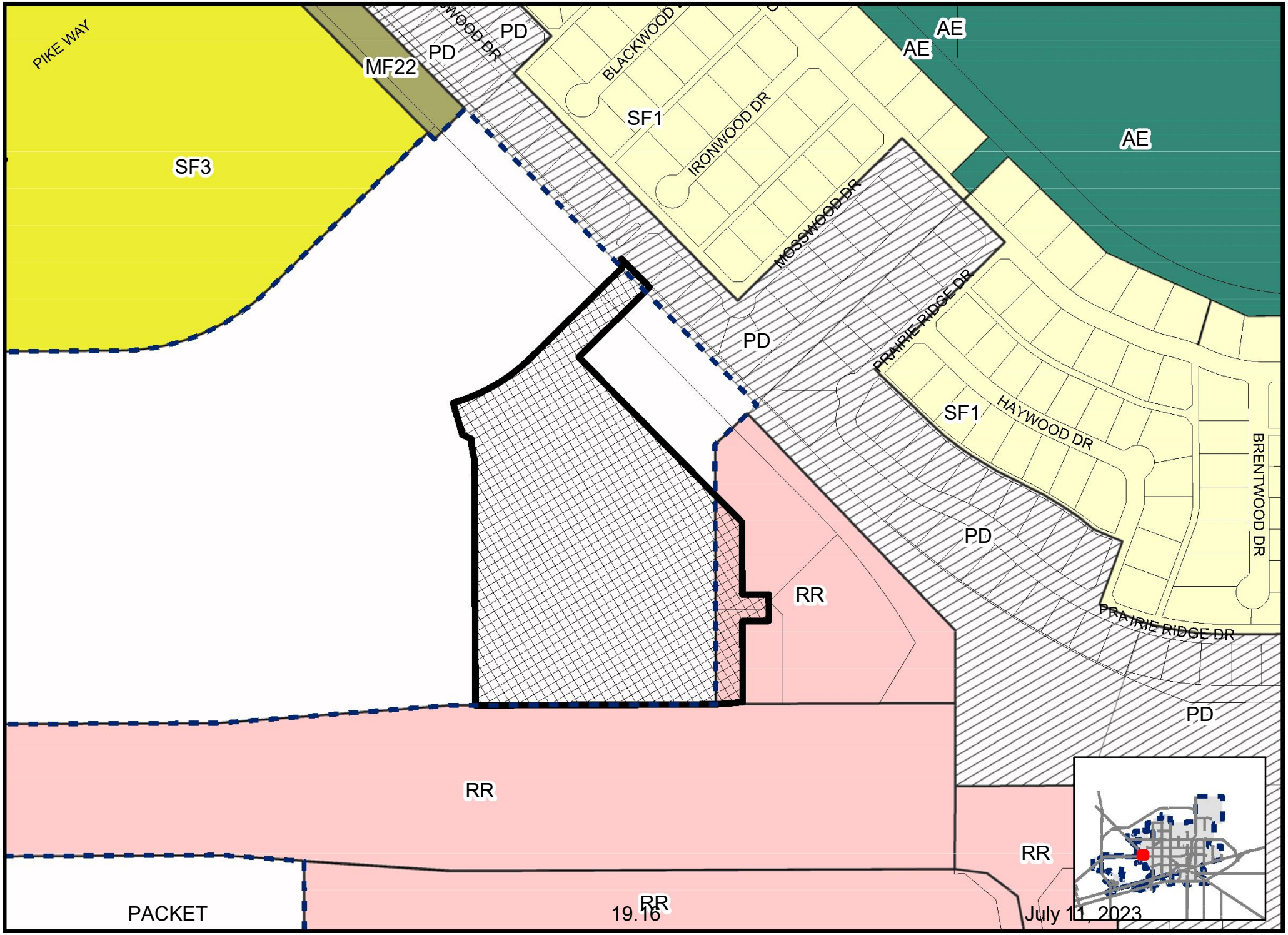

Map By AW, 5/24/2023

Z-23-0329

Scale: 1" = 200'

ZONING MAP

MAVERICK
ENGINEERING · SURVEY · WATER RESOURCES
1909 West Wall Street, Suite K · Midland, TX 79701
Tel: 432.262.0999 · Fax: 432.262.0989 · maverick-eng.com
ENGINEER FIRM #: F-15089 | SURVEY FIRM #:10194514

FIELD NOTE DESCRIPTION OF A 17.345 ACRE TRACT OF LAND, SITUATED IN SECTION 35, BLOCK 40, TOWNSHIP 1 SOUTH, TEXAS and PACIFIC RAILWAY COMPANY SURVEY, MIDLAND COUNTY, TEXAS, BEING A PORTION OF THAT SAME LAND AS DESCRIBED AS TRACT SEVEN IN A WARRANTY DEED FILED AS DOCUMENT NUMBER 2008-26873 IN VOLUME 3131 ON PAGE 210 OF THE OFFICIAL PUBLIC RECORDS (OPR) OF SAID MIDLAND COUNTY, TEXAS, AND BEING MORE PARTICULARLY DESCRIBED AS FOLLOWS;

COMMENCING *AT N.(Y):10693732.66, E.(X):1726261.95, A POINT WITHIN A TXDOT TYPE I CONCRETE MONUMENT (TYPE I) FOUND AND ACCEPTED AS BEING ON THE NORTH RIGHT-OF-WAY LINE OF STATE HIGHWAY 191, AS DESCRIBED IN VOLUME 715 ON PAGE 287 OF SAID "OPR" AT THE SOUTHEAST CORNER OF A TRACT DESCRIBED AS AN 80-FOOT-WIDE DRAINAGE EASEMENT IN VOLUME 715 ON PAGE 280 OF SAID "OPR" AND BEING THE SOUTHWEST CORNER OF A CALLED 7.573 ACRE TRACT IN DOCUMENT NUMBER 2018-31010 OF SAID "OPR",* ***THENCE*** *S.75°15'20"W., ALONG SAID RIGHT-OF-WAY, 79.47 FEET TO A "TYPE I" FOUND FOR THE* ***POINT OF BEGINNING*** *AND THE SOUTHEAST CORNER HEREOF;*

THENCE *S.75°15'20"W., ALONG SAID RIGHT-OF-WAY, 724.82 FEET TO A "TYPE I" FOUND FOR AN ANGLE CORNER HEREOF;*

THENCE *S.71°08'16"W., ALONG SAID RIGHT-OF-WAY, 80.97 FEET TO A POINT THAT BEARS S.14°44'01"E., 0.31 FEET FROM A ONE*
HALF INCH IRON ROD WITH A PLASTIC CAP MARKED "WAI 5714" (WAI) FOR THE SOUTHWEST CORNER HEREOF;

THENCE *N.14°44'01"W., ACROSS SAID TRACT SEVEN, 742.30 FEET TO A "WAI" FOUND FOR THE POINT OF CURVATURE FOR A CURVE*
TO THE LEFT HAVING A RADIUS OF 220.00 FEET AND A CHORD BEARING AND DISTANCE OF N.22°58'18"W., 62.86 FEET;

THENCE *ALONG THE ARC OF SAID CURVE 63.08 FEET TO A "WAI" FOUND FOR A POINT OF DEFLECTION HEREOF;*

THENCE *N.79°38'54"W., 30.25 FEET TO A "WAI" FOUND FOR AN ANGLE CORNER HEREOF;*

THENCE *N.30°32'30"W., 99.89 FEET TO A "WAI" FOUND FOR A POINT OF DEFLECTION AND THE POINT OF CURVATURE FOR A CURVE TO THE NORTHEAST HAVING A RADIUS OF 550.00 FEET AND A CHORD BEARING AND DISTANCE OF N.45°10'40"E., 271.48 FEET FOR THE NORTHWEST CORNER HEREOF;*

THENCE *ALONG THE ARC OF SAID CURVE 274.32 FEET TO A "WAI" FOUND FOR A POINT OF TANGENCY HEREOF;*

THENCE *N.30°55'14"E., 384.19 FEET TO A ONE HALF INCH IRON ROD FOUND FOR A CUTBACK CORNER HEREOF;*

THENCE *N.14°40'14"W., 28.28 FEET TO A POINT ON THE SOUTHWEST RIGHT-OF-WAY LINE OF STATE HIGHWAY 158, BEING THE NORTHEAST LINE OF SAID "TRACT SEVEN" THAT BEARS S.69°42'03"W., 0.23 FEET FROM A ONE HALF INCH IRON ROD, FOR THE NORTH CORNER HEREOF;*

THENCE *S.59°05'27"E., ALONG SAID TRACT SEVEN AND SAID RIGHT OF WAY, A DISTANCE OF 120.15 FEET TO A ONE-HALF INCH IRON ROD WITH RED PLASTIC CAP MARKED "MAVERICK FIRM #10194514" (RPC) SET FOR THE NORTH NORTHEAST CORNER HEREOF;*

THENCE *S.30°54'15"W., A DISTANCE OF 300.00 FEET TO AN "RPC" SET FOR AN INTERIOR CORNER HEREOF;*

THENCE *S.59°05'27"E., A DISTANCE OF 701.14 FEET TO AN "RPC" SET ON THE WEST LINE OF SAID 80-FOOT WIDE DRAINAGE EASEMENT FOR THE EAST NORTHEAST CORNER HEREOF;*

THENCE *ALONG AND ACROSS SAID DRAINAGE EASEMENT THE FOLLOWING 4 CALLS:*
1.) S.14°42'47"E., A DISTANCE OF 217.83 FEET TO AN "RPC" SET FOR AN INTERIOR CORNER HEREOF;
2.) N.75°16'29"E., A DISTANCE OF 79.54 FEET TO AN "RPC" SET FOR A CORNER HEREOF;
3.) S.14°42'04"E., A DISTANCE OF 80.00 FEET TO AN "RPC" SET FOR A CORNER HEREOF;
4.) S.75°16'29"W., A DISTANCE OF 79.52 FEET TO AN "RPC" SET FOR AN INTERIOR CORNER HEREOF;

THENCE *S.14°42'47"E., CONTINUING ALONG SAID EASEMENT, 245.61 FEET TO THE* ***POINT OF BEGINNING****, CONTAINING 17.345 ACRES OF LAND.*



December 15, 2022

Gregory W. Shoults
www.maverick-eng.com
Texas RPLS - No. 5356
Maverick Engineering (FIRM – No. 10194514)

FIELD NOTE DESCRIPTION:

FIELD NOTE DESCRIPTION OF A 17.345 ACRE TRACT OF LAND, SITUATED IN SECTION 35, BLOCK 40, TOWNSHIP 1 SOUTH, TEXAS and PACIFIC RAILWAY COMPANY SURVEY, MIDLAND COUNTY, TEXAS, BEING A PORTION OF THAT SAME LAND AS DESCRIBED AS TRACT SEVEN IN A WARRANTY DEED FILED AS DOCUMENT NUMBER 2008-26870 IN VOLUME 1033 ON PAGE 258 OF THE OFFICIAL PUBLIC RECORDS (ORs) OF SAID MIDLAND COUNTY, TEXAS, AND BEING MORE PARTICULARLY DESCRIBED AS FOLLOWS;

COMMENCING AT N (Y) 10699732.66, E (X) 1776261.86, A POINT WITHIN A TXDOT TYPE I CONCRETE MONUMENT (TYPE I) FOUND AND ACCEPTED AS BEING ON THE NORTH RIGHT-OF-WAY LINE OF STATE HIGHWAY 191, AS DESCRIBED IN VOLUME 715 ON PAGE 287 OF SAID "ORM" AT THE SOUTHEAST CORNER OF A TRACT DESCRIBED AS AN 80-FOOT WIDE DRAINAGE EASEMENT IN VOLUME 715 ON PAGE 280 OF SAID "ORM" AND BEING THE SOUTHWEST CORNER OF A CALLED 7.573 ACRE TRACT IN DOCUMENT NUMBER 2018-33010 OF SAID "OPR"; **THENCE** S 75°15'20"W, ALONG SAID RIGHT-OF-WAY, 79.47 FEET TO A "TYPE I" FOUND FOR THE **POINT OF BEGINNING** AND THE SOUTHEAST CORNER HEREOF;

THENCE S 75°15'20"W, ALONG SAID RIGHT-OF-WAY, 724.82 FEET TO A "TYPE I" FOUND FOR AN ANGLE CORNER HEREOF;

THENCE S 71°08'16"W, ALONG SAID RIGHT-OF-WAY, 80.97 FEET TO A POINT THAT BEARS S 34°44'01"E, 0.31 FEET FROM A ONE HALF INCH IRON ROD WITH A PLASTIC CAP MARKED "WAI 5734" (WAI) FOR THE SOUTHWEST CORNER HEREOF;

THENCE N 14°44'01"W, ACROSS SAID TRACT SEVEN, 742.30 FEET TO A "WAI" FOUND FOR THE POINT OF CURVATURE FOR A CURVE TO THE LEFT HAVING A RADIUS OF 220.00 FEET AND A CHORD BEARING AND DISTANCE OF N 22°58'18"W, 62.86 FEET;

THENCE ALONG THE ARC OF SAID CURVE 63.08 FEET TO A "WAI" FOUND FOR A POINT OF DEFLECTION HEREOF;

THENCE N 79°38'54"W, 30.25 FEET TO A "WAI" FOUND FOR AN ANGLE CORNER HEREOF;

THENCE N 30°32'30"W, 99.89 FEET TO A "WAI" FOUND FOR A POINT OF DEFLECTION AND THE POINT OF CURVATURE FOR A CURVE TO THE NORTHEAST HAVING A RADIUS OF 550.00 FEET AND A CHORD BEARING AND DISTANCE OF N 45°10'40"E, 271.48 FEET FOR THE NORTHWEST CORNER HEREOF;

THENCE ALONG THE ARC OF SAID CURVE 274.32 FEET TO A "WAI" FOUND FOR A POINT OF TANGENCY HEREOF;

THENCE N 30°55'15"E, 384.19 FEET TO A ONE HALF INCH IRON ROD FOUND FOR A CUTBACK CORNER HEREOF;

THENCE N 14°40'14"W, 28.28 FEET TO A POINT ON THE SOUTHWEST RIGHT-OF-WAY LINE OF STATE HIGHWAY 158, BEING THE NORTHEAST LINE OF SAID "TRACT SEVEN" THAT BEARS S 59°43'02"W, 0.23 FEET FROM A ONE HALF INCH IRON ROD, FOR THE NORTH CORNER HEREOF;

THENCE S 59°05'27"E, ALONG SAID TRACT SEVEN AND SAID RIGHT OF WAY, A DISTANCE OF 120.15 FEET TO A ONE-HALF INCH IRON ROD WITH RED PLASTIC CAP MARKED "MAVERICK FIRM #10194514" (RPC) SET FOR THE NORTH NORTHEAST CORNER HEREOF;

THENCE S 30°55'15"W, A DISTANCE OF 300.00 FEET TO AN "RPC" SET FOR AN INTERIOR CORNER HEREOF;

THENCE S 59°05'27"E, A DISTANCE OF 701.14 FEET TO AN "RPC" SET ON THE WEST LINE OF SAID 80-FOOT WIDE DRAINAGE EASEMENT FOR THE EAST NORTHEAST CORNER HEREOF;

THENCE ALONG AND ACROSS SAID DRAINAGE EASEMENT THE FOLLOWING 4 CALLS:

1.) S 14°42'47"E, A DISTANCE OF 217.83 FEET TO AN "RPC" SET FOR AN INTERIOR CORNER HEREOF;
2.) N 75°16'29"E, A DISTANCE OF 79.54 FEET TO AN "RPC" SET FOR A CORNER HEREOF;
3.) S 14°42'04"E, A DISTANCE OF 80.00 FEET TO AN "RPC" SET FOR A CORNER HEREOF;
4.) S 75°16'29"W, A DISTANCE OF 79.52 FEET TO AN "RPC" SET FOR AN INTERIOR CORNER HEREOF;

THENCE S 14°42'47"E, CONTINUING ALONG SAID EASEMENT, 245.61 FEET TO THE **POINT OF BEGINNING**, CONTAINING 17.345 ACRES OF LAND.

TABLE A NOTE:

1. MONUMENTS PLACED OR FOUND AS SHOWN HEREON
2. THERE IS NOT AN ADDRESS ASSOCIATED WITH THIS SITE
3. FLOOD STATEMENT ACCORDING TO PERMIT NFIP FLOOD INSURANCE RATE MAP #48329C0265F DATED SEPTEMBER 26, 2008 THIS PROPERTY AS SHOWN HEREON IS WITHIN THE UNSHADED PORTION OF ZONE "X" DESIGNATED AS "AREAS OF MINIMAL FLOOD HAZARD DETERMINED TO BE OUTSIDE THE 0.2% ANNUAL CHANCE - FLOODPLAIN" THIS FLOOD STATEMENT DOES NOT IMPLY THAT THE PROPERTY AND/OR THE STRUCTURES THEREON WILL BE FREE FROM FLOODING OR FLOOD DAMAGE. ON RARE OCCASIONS, GREATER FLOODS CAN AND WILL OCCUR AND FLOOD HEIGHTS MAY BE INCREASED BY MAN-MADE OR NATURAL CAUSES

   THIS STATEMENT SHALL NOT CREATE LIABILITY ON THE PART OF MAVERICK ENGINEERING
4. GROSS LAND AREA = 17.345 ACRES ; 755,555 SF
7. (a) EXTERIOR DIMENSIONS OF ALL BUILDINGS - NONE OBSERVED
8. SUBSTANTIAL FEATURES OBSERVED IN THE PROCESS OF CONDUCTING FIELD WORK : AS SHOWN HEREON. IF APPLICABLE
9. ZERO VISIBLY MARKED PARKING SPACES WERE OBSERVED IN THE PROCESS OF CONDUCTING THIS SURVEY
13. NAMES OF ADJOINING OWNERS AS SHOWN HEREON
16. NO EVIDENCE OF RECENT EARTH MOVING WORK, BUILDING CONSTRUCTION OR BUILDING ADDITIONS WERE OBSERVED IN THE PROCESS OF CONDUCTING THIS SURVEY
18. OFFSITE EASEMENTS OR SERVITUDE : AS SHOWN HEREON, IF APPLICABLE

LEGEND

- DENOTES SET 1/2-INCH IRON ROD WIRED PLASTIC CAP MARKED "MAVERICK FIRM #10194514"
- TxDOT TYPE I CONCRETE MONUMENT (UNLESS OTHERWISE NOTED)
- 1/2" IRON ROD FOUND W/ CAP MARKED "WAI 5734" (UNLESS OTHERWISE NOTED)
- EXISTING UTILITY MARKER
- EXISTING CABLE BOX
- EXISTING ATMOS GAS MARKER
- EXISTING FIBER OPTIC MARKER
- EXISTING LIGHT POLE
- EXISTING POWER POLE
- EXISTING GUY ANCHOR
- EXISTING WATER VALVE
- EXISTING SIGN
- EXISTING STUB OUT
- BOUNDARY LINE
- EXISTING PROPERTY LINE
- EXISTING EASEMENT LINE
- CITY LIMITS LINE
- EXISTING EDGE OF ASPHALT
- EXISTING FENCE
- EXISTING GAS LINE
- EXISTING OVERHEAD ELECTRIC LINE
- EXISTING 6" WATER LINE
- EXISTING 16" WATER LINE
- EXISTING 30" WATER LINE
- EXISTING 8" WASTEWATER LINE
- DENOTES CONCRETE
- DENOTES PAVEMENT

O.R.M.CT. OFFICIAL RECORDS, MIDLAND CO. TX
D.R.M.CT. DEED RECORDS, MIDLAND CO. TX
P.R.M.CT. PLAT RECORDS, MIDLAND CO. TX

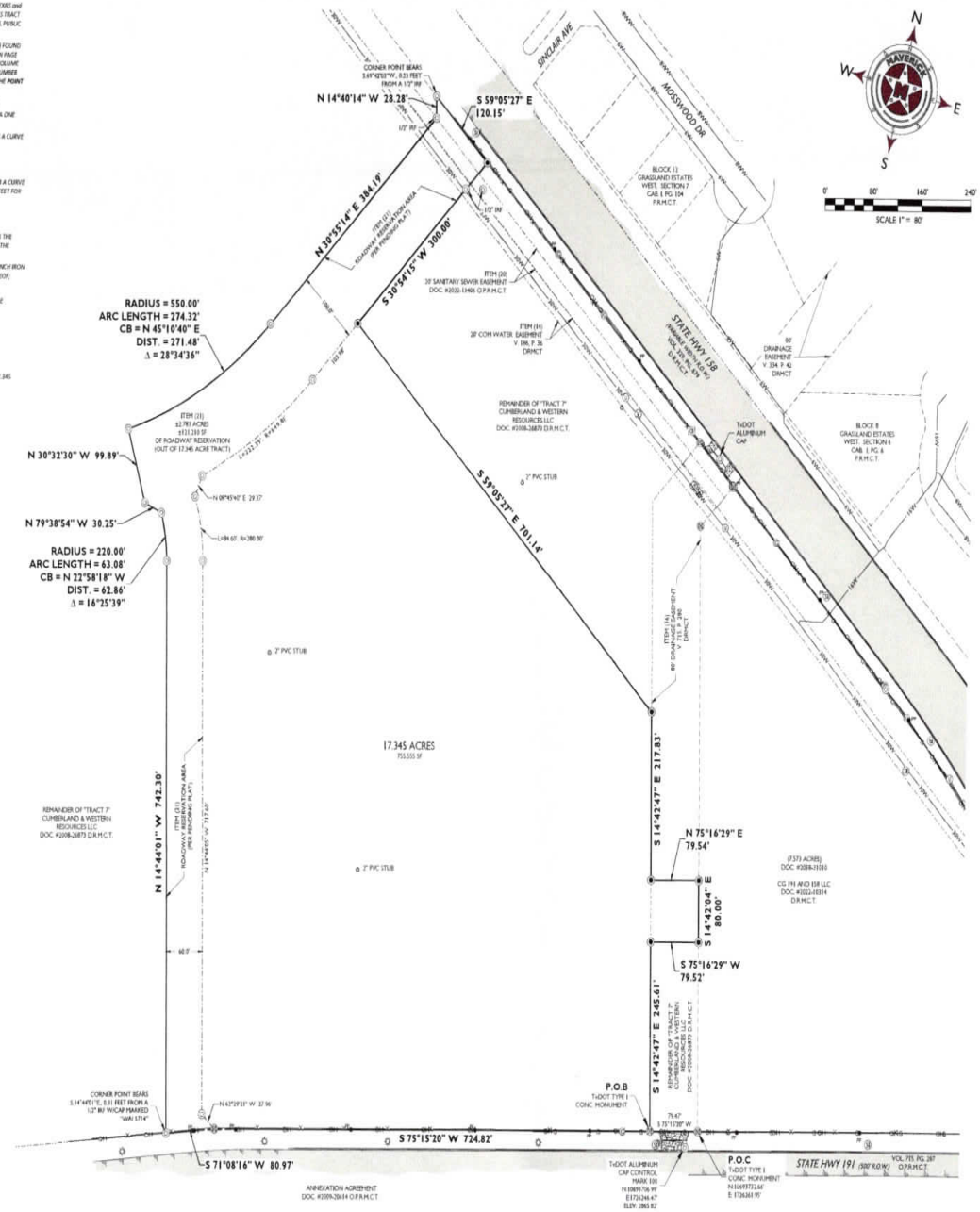

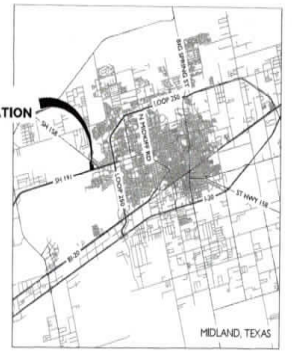

VICINITY MAP
N.T.S

SURVEY NOTES:

1. BASIS OF BEARING, COORDINATES, DISTANCES AND ACREAGE ARE A LAMBERT CONICAL PROJECTION OF THE TEXAS COORDINATE SYSTEM, STATE PLANE GRID, CENTRAL ZONE, NORTH AMERICAN DATUM 1983 (cf.). SURVEY FOOT WITH A COMBINEDZ/NCE ANGLE (theta) OF 0°56'51.02" AND A COMBINED SCALE FACTOR OF 0.999898361. AT A TX DOT ALUMINUM CAP CONTROL MARK, LOCATED AT N 10697736.99 E 1776244.47. EL.3865.82
2. 1/2" IRON ROD WITH RED PLASTIC CAP MARKED "MAVERICK FIRM # 10194514" AT ALL SET CORNERS, UNLESS OTHERWISE SPECIFIED
3. SEE DOCUMENTS OR ELECTRONIC DATA FILED IN THE OFFICE OF MAVERICK ENGINEERING FOR COMPLETE RECONSTRUCTION OF THIS SURVEY
4. LOCATION OF BURIED UTILITIES AND PIPELINES, IF ANY, IS APPROXIMATE BASED UPON OBSERVED EXISTING SIGNAGE, CITY OF MIDLAND GIS AND VISUAL EVIDENCE, OR BY ONE-CALL 811 SITE MARKINGS AT THE TIME OF THIS SURVEY. DUE CARE IS RECOMMENDED. CALL 1-800-DIG-TESS FOR LOCATES PRIOR TO ANY CONSTRUCTION OR EXCAVATION
5. THIS SURVEY IS PREPARED WITH THE BENEFIT OF TITLE COMMITMENT #2201123024L ISSUED DECEMBER 7, 2022 BY COMMONWEALTH LAND TITLE INSURANCE COMPANY.

   WITH REGARD TO SCHEDULE B OF TITLE COMMITMENT:

   (10) **NOT A SURVEY MATTER**

   (11) INTENTIONALLY DELETED

   (12) INTENTIONALLY DELETED

   (13) **NOT A SURVEY MATTER**

   (14) EASEMENT AND RIGHT OF WAY TO THE CITY OF MIDLAND, RECORDED IN VOLUME 186, PAGE 36, DEED RECORDS, MIDLAND COUNTY, TEXAS; **-AS SHOWN HEREON**

   (15) INTENTIONALLY DELETED

   (16) DRAINAGE EASEMENT FOR HIGHWAY PURPOSES TO THE STATE OF TEXAS, RECORDED IN VOLUME 715, PAGE 280 DEED RECORDS, MIDLAND COUNTY, TEXAS **-AS SHOWN HEREON**

   (17) INTENTIONALLY DELETED

   (18) TERMS, CONDITIONS AND PROVISIONS CONTAINED IN PARTIAL RELEASE OF SURFACE RIGHTS, BY AND BETWEEN DIAMONDBACK O&G LLC (LESSEE), DIAMONDBACK E&P, LLC, (OPERATOR), CUMBERLAND AND WESTERN RESOURCES, LLC (OWNER) AND VIPER ENERGY PARTNERS, LLC (MINERAL OWNER) DATED JULY 20, 2016. RECORDED UNDER CLERK'S FILE NO. 2016-20388 OFFICIAL RECORDS OF MIDLAND COUNTY, TEXAS. COMPANY MAKES NO REPRESENTATION AS TO THE PRESENT OWNERSHIP OF THIS INTEREST **-AFFECTS, NOT REPRODUCIBLE**

   (19) INTENTIONALLY DELETED

   (20) TERMS, CONDITIONS AND PROVISIONS CONTAINED IN SANITARY SEWER EASEMENT AGREEMENT, BY AND BETWEEN CG 191 & 158 LLC AND CUMBERLAND AND WESTERN RESOURCES, LLC, DATED MAY 6, 2022, RECORDED UNDER CLERK'S FILE NO. 2022-13406, OFFICIAL RECORDS OF MIDLAND COUNTY, TEXAS. COMPANY MAKES NO REPRESENTATION AS TO THE PRESENT OWNERSHIP OF THIS INTEREST **-AS SHOWN HEREON**

   (21) ROADWAY RESERVATION AREA ALONG WEST AND NORTHWEST SIDES AS SHOWN ON SURVEY DATED NOVEMBER 23, 2022, LAST REVISED DECEMBER 6, 2022, PREPARED BY GREGORY W. SHOULTS, RPLS #5256 **-AS SHOWN HEREON**

   (22) **NOT A SURVEY MATTER**

   (23) OVERHEAD ELECTRIC LINE, POWER POLES, GAS LINE AND ATMOS GAS MARKER LOCATED ALONG THE SOUTH SIDE OF SUBJECT PROPERTY AS SHOWN ON SURVEY DATED NOVEMBER 23, 2022, LAST REVISED DECEMBER 6, 2022, PREPARED BY GREGORY W. SHOULTS, RPLS #5256 **-AS SHOWN HEREON**

SURVEYOR: GWS	SCALE: 1" = 80'	APPROVAL DATE: 11.23.2022	
DRAWN BY: AD	JOB NO.: 220185	REV 1: 11.22.2022	REV 2: 11.23.2022
APPROVED: GWS	FIELD WORK DATE: 9.26.2022 - 9.27.2022	REV 3: 12.6.2022	REV 3: 12.15.2022

TO C. HODGES DEVELOPMENT SERVICES, L.P. AND COMMONWEALTH LAND TITLE INSURANCE COMPANY: THIS IS TO CERTIFY THAT THIS MAP OR PLAT AND THE SURVEY ON WHICH IT IS BASED WERE MADE IN ACCORDANCE WITH THE 2021 MINIMUM STANDARD DETAIL REQUIREMENTS FOR THE ALTA/NSPS LAND TITLE SURVEYS, JOINTLY ESTABLISHED AND ADOPTED BY ALTA AND NSPS, AND INCLUDES ITEMS: 1, 2, 3, 4, 7a, 8, 9, 13, 16, AND 18 OF TABLE A THEREOF. THE FIELD WORK WAS COMPLETED ON SEPTEMBER 27, 2022.

GREGORY W. SHOULTS, RPLS #5256
FIRM NO. TX. #10194514
DECEMBER 15, 2022

STATE OF TEXAS GREGORY W. SHOULTS 5256 REGISTERED LAND SURVEYOR

MAVERICK
ENGINEERING / SURVEY / WATER RESOURCES
ENGINEER FIRM #: F-15089 | SURVEY FIRM #: 10194514
1909 West Wall Street, Suite "K" - Midland, Texas 79701
Tel: (432) 262-0999 Fax: (432) 262-0989
www.Maverick-Eng.com

C. HODGES DEVELOPMENT SERVICES, L.P

ALTA/NSPS SURVEY

OF A 17.345-ACRE TRACT OF LAND, SITUATED IN SECTION 35, BLOCK 40, TOWNSHIP 1 SOUTH, TEXAS and PACIFIC RAILWAY COMPANY SURVEY, MIDLAND COUNTY, TEXAS









City Council Meeting

Item Number: 20

Meeting Date: July 11, 2023

To: City Council / City Manager

From: Alexandra Walling, Senior Planner

Subject: AN ORDINANCE AMENDING THE ZONING DISTRICT MAP OF THE CITY OF MIDLAND TO GRANT A SPECIFIC USE DESIGNATION WITH TERM FOR A 3,400-SQUARE FOOT PORTION OF LOT 12, BLOCK 38, ORIGINAL TOWN, CITY AND COUNTY OF MIDLAND, TEXAS (GENERALLY LOCATED ON THE EAST SIDE OF NORTH MAIN STREET, APPROXIMATELY 25 FEET SOUTH OF EAST ILLINOIS AVENUE), WHICH IS PRESENTLY ZONED CB, CENTRAL BUSINESS DISTRICT, ALLOWING SAID PROPERTY TO BE USED FOR THE SALE OF ALL ALCOHOLIC BEVERAGES IN A BAR FOR ON-PREMISES CONSUMPTION; MAKING SAID DESIGNATION SUBJECT TO CERTAIN CONDITIONS AND RESTRICTIONS CONTAINED HEREIN; CONTAINING A CUMULATIVE CLAUSE; CONTAINING A SAVINGS AND SEVERABILITY CLAUSE; PROVIDING FOR A MAXIMUM PENALTY OR FINE OF TWO THOUSAND DOLLARS ($2,000.00); AND ORDERING PUBLICATION (DISTRICT 2) (DEVELOPMENT SERVICES)

Purpose:

The applicant, Lori Michele Kettle, is requesting a Specific Use Designation (SUD) with Term for Alcoholic Beverages Sales for On-Premises Consumption in a Bar.

Recommended City Council Action:

Approve

Fiscal Impact:

This proposal does not have a significant financial impact to the City.

Current Zoning:

CB, Central Business District.

Surrounding Zoning and Land Use:

The properties to the north, east, south, and west are all zoned CB, Central Business District. A church is located to the north, a parking lot is located to the east, a business office is located to the south, and retail stores to the west of the property.

Analysis:

The property is zoned CB, Central Business District which allows for Alcoholic Beverages Sales for On-Premises Consumption in a Bar with the approval of an SUD. The total bar area is 3,400-square feet and the proposed alcohol serviceable area is 1,835-square feet. The property has an existing SUD for Alcoholic Beverage Sales for On-Premises Consumption for the same bar, Buffalo Nickel (Ordinance No. 9910). The applicant is requesting this SUD to expand the hours of operation from the current Monday through Saturday from 3:00 p.m. to 11:00 p.m., and Sunday from 12:00 p.m. to 12:00 a.m. to the hours below:

Monday through Sunday from 12 p.m. to 2 a.m.

Per Midland City Code 5.4.4. –Prohibited place of business

The sale of any alcoholic beverage is hereby prohibited by any person, where the place of business of any such dealer is within 300 feet of any church, public school, public school ground, athletic stadium used by any public school or public hospital, the measurements to be along the property lines of the street fronts and from front door to front door and in a direct line across intersections where they occur.

There are no churches, private schools, public schools, public school grounds, athletic stadium, public hospital within 300 feet measurement along the property lines of the street fronts, and from the front door in a direct line across intersection where they occur within this site.

This project has been circulated to all City departments for review. Below are the department comments.

Fire: (Approved)

No objections.

Engineering: (Approved)

No objections. [For Applicant's Information Only.]

Transportation: (Approved)

No objections. [For the Applicant's information only.]

Building Code: (Approved)

The SUD is approved based on the current occupant load pending that no changes to the occupancy, seating count, physical structure, and/or the floor layout has taken place when compared to previously approved SUDs. Occupancy loads must be posted in accordance with section 1004.3 of the 2015 International Fire Code.

Planning:

The request follows the *Tall City Tomorrow Comprehensive Plan, Chapter 6-Character Plan Goal 4,* "Encourage the development of places where Midland residents can gather and socialize to build connections." (Tall City Tomorrow page 137). The existing Buffalo Nickel is a destination where Midland residents gather and socialize.

This request meets all requirements; therefore, staff recommends approval of the request of the Specific Use Designation with Term for the sale of all alcoholic beverages, for on-premises consumption, in a bar, subject to Condition A through E.

Conditions:

A. **That the serviceable area of the Establishment shall be limited to approximately 1,835-square feet as shown in Exhibit "A", which is attached hereto and incorporated herein for all purposes.**

B. **That the sale and on-premises consumption of alcoholic beverages shall conform to all applicable state and local laws.**

C. **That the occupancy of the Establishment shall not exceed the maximum occupancy determined by the Building Code and Fire Code.**

D. **That the days and hours of alcoholic beverage sales and consumption shall be limited to Monday through Sunday from 12:00 p.m. (noon) to 2:00 a.m. of the following day.**

E. **That the Establishment shall meet the requirements of the Fire Department and the Code Administration Division.**

Letters of Objection:

As of June 28, 2023, staff has not received any letters of objection.

Attachments:

Application
Floor Plan (Exhibit A)
Maps

Monroe William Jr.

City Manager's Office

ORDINANCE NO. _____

AN ORDINANCE AMENDING THE ZONING DISTRICT MAP OF THE CITY OF MIDLAND TO GRANT A SPECIFIC USE DESIGNATION WITH TERM FOR A 3,400-SQUARE FOOT PORTION OF LOT 12, BLOCK 38, ORIGINAL TOWN, CITY AND COUNTY OF MIDLAND, TEXAS (GENERALLY LOCATED ON THE EAST SIDE OF NORTH MAIN STREET, APPROXIMATELY 25 FEET SOUTH OF EAST ILLINOIS AVENUE), WHICH IS PRESENTLY ZONED CB, CENTRAL BUSINESS DISTRICT, ALLOWING SAID PROPERTY TO BE USED FOR THE SALE OF ALL ALCOHOLIC BEVERAGES IN A BAR FOR ON-PREMISES CONSUMPTION; MAKING SAID DESIGNATION SUBJECT TO CERTAIN CONDITIONS AND RESTRICTIONS CONTAINED HEREIN; CONTAINING A CUMULATIVE CLAUSE; CONTAINING A SAVINGS AND SEVERABILITY CLAUSE; PROVIDING FOR A MAXIMUM PENALTY OF FINE OF TWO THOUSAND DOLLARS ($2,000.00); AND ORDERING PUBLICATION

WHEREAS, the City Planning and Zoning Commission and the Governing Body of the City of Midland, Texas, in compliance with the City Charter, the City Code, and State law, have given the requisite notices by United States mail, publication and otherwise; and

after holding due hearings affording a full and fair hearing to all of the property owners generally, and particularly to those interested persons situated in the affected area and in the vicinity thereof, the Governing Body of the City of Midland finds that the public convenience and welfare will be best served by granting the Specific Use Designation With Term for the sale of alcoholic beverages as set forth herein; and

WHEREAS, the Property shall be subject to the following conditions (together, the "Property"), as set out hereinafter, with respect to the present CB, Central Business District.

restrictions:

A. That the serviceable area of the Establishment shall be limited to approximately 1,835 square feet as shown in Exhibit "A" which is attached hereto and incorporated herein for all purposes.

B. That the sale and on-premises consumption of alcoholic beverages shall conform to all applicable state and local laws.

C. That the days and hours of alcoholic beverage sales and consumption shall be limited to Monday through Sunday from 12:00 p.m. (noon) to 2:00 a.m. of the following day.

D. That the maximum occupancy determined by the Building Code and Fire Code.

E. That the Establishment shall meet the requirements of the Fire Department and the Code Administration Division.

SECTION FOUR. If any section, subsection, sentence, clause or phrase of this ordinance is, for any reason, held to be unconstitutional or invalid, such holding shall not affect the validity of the remaining portions of this ordinance. The Council of the City of Midland hereby declares that it would have passed this ordinance and each section, subsection, sentence, clause, or phrase hereof irrespective of the fact that any one or more sections, subsections, sentences, clauses, or phrases be declared unconstitutional or invalid.

SECTION THREE. The provisions of this ordinance are to be cumulative of all other ordinances or parts of ordinances governing or regulating the same subject matter as that covered herein; provided, however, that all prior ordinances or parts of ordinances, inconsistent with or in conflict with any of the provisions of this ordinance, are hereby expressly repealed to the extent of any such inconsistency or conflict.

SECTION FIVE. The penalty for violation of this ordinance shall be in accordance with the general penalty provisions contained in Section 1-3-1 of the City Code of Midland, Texas, which provides for a fine not exceeding two thousand dollars ($2,000.00).

SECTION SIX. The City Secretary is hereby authorized and directed to publish the law as an alternative method of publication. descriptive caption of this ordinance in the manner and for the length of time prescribed by

The above and foregoing ordinance was duly proposed, read in full and adopted on

first reading, the _____ day of _____, A.D., 2023; and passed to second reading

Council members voting "AYE":

on motion of Council member _____, seconded by Council member

Council members voting "NAY":

_____, by the following vote:

The above and foregoing ordinance was read in full and finally adopted by the

following vote upon motion of Council member _____, seconded by Council

Council members voting "AYE":

member _____, on the _____ day of _____, A.D., 2023, at a regular

Council members voting "NAY":

meeting of the City Council:

PASSED AND APPROVED THIS _____ day of _____, A.D., 2023.

_____

Lori Merritt Blong, Mayor

ATTEST:

_____

Marcia Bentley-German, City Secretary

APPROVED AS TO CONTENT

AND COMPLETENESS:

_____

Charles Harrington, Director of Development Services

APPROVED ONLY AS TO FORM:

_____

John Ohnemiller, City Attorney

EXHIBIT "A"



PARKING ANALYSIS

USE	SQUARE FOOTAGE	APPL. RATION 1 CAR PER	PARKING REQUIRED	PARKING PROVIDED	PARKING AVAILABLE
THE BUFFALO NICKEL	2,400	100 SQ. FT.	24	24	170
Legal Aid of Northwest Texas	6,600	300 SQ. FT.	22	22	170
NORTH MAIN STREET (VARIOUS USES)	14,000	250 SQ. FT.	55	55	170
TOTAL			101	170	170

170 SPACES ARE PROVIDED
THE LOT MEETS THE 24 PARKING SPACES REQUIRED



Submittal and Fees

Items to be submitted with this application form:

- Application Fee – Payable to the 'City of Midland'
- Dimensioned Floor Plan showing:
  - Seating
  - Exits
  - Restrooms
  - Kitchen
  - Total Square Footage
  - Serviceable Square Footage
- Dimensioned Site Plan showing:
  - Parking
  - Business Footprint
- Digital Copies of Floor Plan & Site Plan (PDF/JPEG)

FLOOR PLAN - SCALE: 1/8" =1'

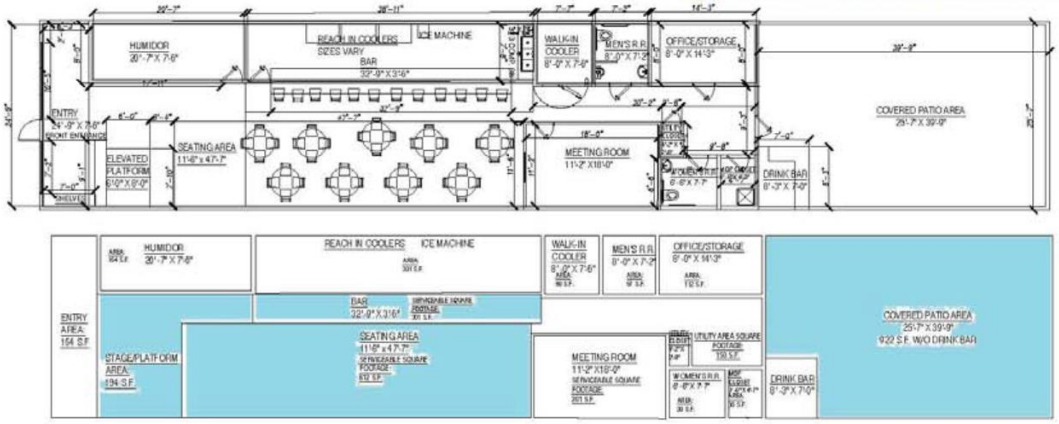

Oak Cliff Drafting Solutions
"Convenient, Conventional & Creative"
DALLAS, ARLINGTON, FORT WORTH,
Grand Prairie, Cedar Hill, Richardson, Mesquite, Plano, Irving, Lancaster, DeSoto, Duncanville, Irving, Garland, Glenn Heights, Red Oak, Frisco
TEL: 214-586-6082
email redlines:
ocdraftingsolutions@gmail.com
O·C T·X

THESE PLANS ARE INTENDED TO PROVIDE BASIC CONSTRUCTION INFORMATION NECESSARY TO SUBSTANTIALLY BUILD THIS STRUCTURE. THESE PLANS MUST BE VERIFIED AND CHECKED BY THE BUILDER, HOMEOWNER, AND ALL CONTRACTORS OF THIS JOB PRIOR TO CONSTRUCTION. BUILDER SHOULD OBTAIN COMPLETE ENGINEERING SERVICES, HVAC, AND STRUCTURAL BEFORE BEGINNING CONSTRUCTION OF ANY KIND. NOTE: ALL FEDERAL, STATE, AND LOCAL CODES AND RESTRICTIONS TAKE PRECEDENCE OVER ANY PART OF THESE PLANS.

GREAT CARE AND EFFORT HAVE GONE INTO THE CREATION OF THESE BLUEPRINTS. HOWEVER, BECAUSE OF THE VARIANCE IN GEOGRAPHIC LOCATIONS, OAK CLIFF DRAFTING SOLUTIONS, WILL NOT ASSUME LIABILITY FOR ANY DAMAGES DUE TO ERRORS, OMISSIONS, OR DEFICIENCIES ON THESE PLANS. OWNER/BUILDER MUST COMPLY WITH LOCAL BUILDING CODES PRIOR TO COMMENCEMENT OF CONSTRUCTION.
THE PURCHASE OF THESE PLANS ENTITLES THE BUYER TO CONSTRUCT THIS HOUSE ONLY ONCE. ANY COPYING, TRACING, OR ALTERING OF THESE PLANS IS NOT PERMITTED. VIOLATORS WILL BE SUBJECT TO PROSECUTION UNDER COPYRIGHT LAWS.

Project Name & Address
216 N MAIN ST
MIDLAND, TX
79701
THE BUFFALO NICKEL
LOT 1 + N30 LOT 2 +
S10 CARRIZO STREET, BLOCK 38
VOLUME 3, PAGE 232
MIDLAND COUNTY

APPLICABLE BUILDING CODES:
2015 IBC - International Building Code
2015 IRC - International Residential Code
2015 IFC - International Fire Code
2015 IMC - International Mechanical Code
2015 IPC - International Plumbing Code
2015 IFGC - International Fuel Gas Code
2015 IECC - International Energy Conservation Code
2014 NEC - National Electrical Code

Date	Sheet #
06/20/2018	1
Scale: 1"=30'-0"	Sheet Name: SITE PLAN
Drawn By: JR	

MIDLAND
Planning Division

Specific Use Designation with Term for the Sale of Alcoholic Beverages for On-Premises Consumption

Project Number: SUP-23-0158

Case Number: [illegible]

Applicant *(if acting as Agent, see affidavit on page 2)* Printed Name: LORI MICHELE KETTLE			Phone (817) 723-9896 Email L.Kettle@thebuffalonickelbar.com
Address: 8608 Lake Country Drive	City: MIDLAND	State: TX	Zip: 79179
Property Owner Printed Name: WSJV, LLC Frank Tirey			Phone (713) 385-6527 Email becky.thompson@rtspecialty.com
Address: 206 North Main St	City: MIDLAND	State: TX	Zip: 79701
Representative *(if different from Applicant or Property Owner)* Firm: Printed Name:			Phone ( ) Email
Address	City	State	Zip

Street Address: 216 N Main St, MIDLAND, TX 79701

Business Name: W and R Consultants, LLC dba The Buffalo Nickel by Cibolo Creek

Legal Description
Lot: 1 + N30' Lot 2 Block: 38 Subdivision: Original Town of MIDLAND

Current Zoning: C1 Central Area District

Reason for Request: extension of business hours

Type of Business *(restaurant, bar, lounge, nightclub, etc.)*: bar

Proposed/Current Days and Hours of Operation: MONDAY-SUNDAY 12pm-2am
Current: MONDAY-SUNDAY 12pm-12am

Proposed Days and Hours of Alcohol Service: MONDAY-SUNDAY 12pm-2am
Current: Monday-Sunday 12pm-12am

Total Square Footage of Business: 3,400 sq ft

Square Footage of Alcohol Serviceable Area: 1,835 sq ft

Restroom Fixtures:	*Men*	**Toilets/Urinals:** 1 / 1	**Bathroom Sinks:** 1
	Women	**Toilets:** 1	**Bathroom Sinks:** 1

RECEIVED
MAY 04 2023
BY: .....

Submittal and Fees

Items to be submitted with this application form:

- Application Fee – Payable to the 'City of Midland'
- Dimensioned Floor Plan showing:
  - Seating
  - Exits
  - Restrooms
  - Kitchen (if applicable)
  - Total Square Footage
  - Serviceable Square Footage
- Dimensioned Site Plan showing: *Parking *Business Footprint
- Digital Copies of Floor Plan & Site Plan (PDF/JPEG)

Signatures	
Applicant (signature):	Date:
Applicant (printed):	
Property Owner (signature):	Date:
Property Owner (printed) :_____	

The Specific Use Designation with Term for the sale of all alcoholic beverages shall be considered officially received in the Planning office only when it has been submitted in full compliance with the provisions of Section 212 of the Texas Local Government Code and the Zoning Code of Ordinances of the City of Midland and when such required items for the application are also received.

All materials, submitted in support of an application, or displayed during a public hearing, shall remain the property of the City of Midland.

If an agent is authorized by the property owner to file and execute application on behalf of property owner, agent must complete the affidavit below.

STATE OF TEXAS
COUNTY OF MIDLAND

Before me, the undersigned authority, on this day personally appeared_____who, being by me duly sworn, upon oath says: That (s)he is authorized by_____, the owner of the above described property, to fully represent him/her in this application and that (s)he had the legal right, power and authority to sign said owner's name hereto as his/her attorney in fact.

_____

Subscribed and sworn to before me, this_____day of_____, 20 _, to certify which witness my hand and seal of office.

_____

Notary Public

FOR OFFICE USE ONLY

☐ Property Owner Authorization	☐ Dimensioned Floor Plan
☐ Application Fee	☐ Site Plan
Check #_____	☐ Plans in Digital Format (PDF/JPEG)
Received By:_____	Date:_____

****Application will not be considered for scheduling until reviewed by a planner.****

Submittal and Fees

Items to be submitted with this application form:

- Application Fee – Payable to the 'City of Midland'
- Dimensioned Floor Plan showing:
  - Seating
  - Exits
  - Restrooms
  - Kitchen (if applicable)
  - Total Square Footage
  - Serviceable Square Footage
- Dimensioned Site Plan showing: *Parking *Business Footprint
- Digital Copies of Floor Plan & Site Plan (PDF/JPEG)

Signatures

Applicant (signature): Lori M Kettle	Date: 5/2/2023
Applicant (printed): LORI M KETTLE	
Property Owner (signature): Frank Tirey	Date:
Property Owner (printed): FRANK TIREY	

The Specific Use Designation with Term for the sale of all alcoholic beverages shall be considered officially received in the Planning office only when it has been submitted in full compliance with the provisions of Section 212 of the Texas Local Government Code and the Zoning Code of Ordinances of the City of Midland and when such required items for the application are also received.

All materials, submitted in support of an application, or displayed during a public hearing, shall remain the property of the City of Midland.

If an agent is authorized by the property owner to file and execute application on behalf of property owner, agent must complete the affidavit below.

STATE OF TEXAS
COUNTY OF MIDLAND Tarrant TP

Before me, the undersigned authority, on this day personally appeared Lori Kettle who, being by me duly sworn, upon oath says: That (s)he is authorized by Frank Tirey, the owner of the above described property, to fully represent him/her in this application and that (s)he had the legal right, power and authority to sign said owner's name hereto as his/her attorney in fact. Lori M Kettle

Subscribed and sworn to before me, this 02 day of May, 2023, to certify which witness my hand and seal of office.

TARA PEACOCK
Notary Public, State of Texas
Comm. Expires 06-10-2024
Notary ID 132516222

Tara Peacock
Notary Public

FOR OFFICE USE ONLY

☒ Property Owner Authorization	☒ Dimensioned Floor Plan
☒ Application Fee	☒ Site Plan
Check # 1861	☐ Plans in Digital Format (PDF/JPEG)
Received By: VG	Date: RECEIVED MAY 04 2023

BY: .....

****Application will not be considered for scheduling until reviewed by a planner.****

ILLINOIS AVENUE

150'-0" SITE PLAN - SCALE: 1" = 30'

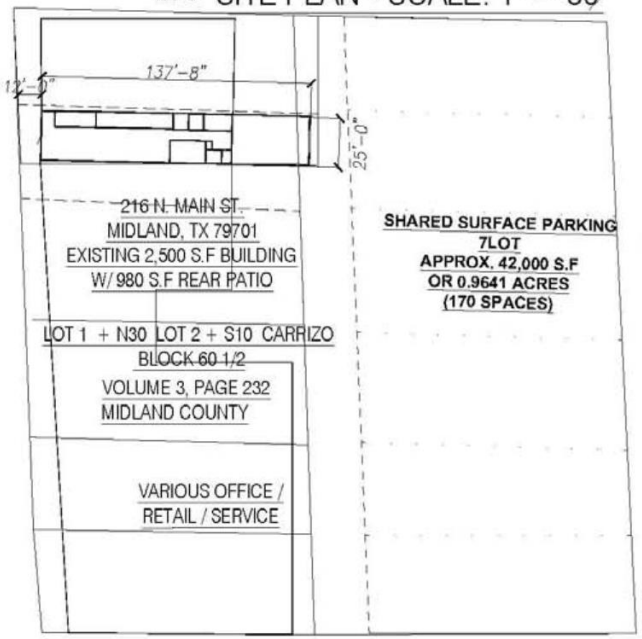

NORTH MAIN STREET

BAIRD STREET

NORTH

TEXAS AVENUE

PARKING ANALYSIS

USE	SQUARE FOOTAGE	APPL. RATION 1 CAR PER	PARKING REQUIRED	PARKING PROVIDED	PARKING AVAILABLE
THE BUFFALO NICKEL	3,400	100 SQ. FT.	34	34	170
Legal Aid of Northwest Texas	6,600	300 SQ. FT.	22	22	170
NORTH MAIN STREET (VARIOUS USES)	14000	250 SQ FT	55	55	170
TOTAL			120	170	170

170 SPACES ARE PROVIDED
THE LOT MEETS THE 34 PARKING SPACES REQUIRED



VICINITY MAP - N.T.S.

Submittal and Fees

Items to be submitted with this application form:

- Application Fee – Payable to the 'City of Midland'
- Dimensioned Floor Plan showing:
  - Seating
  - Exits
  - Restrooms
  - Kitchen
  - Total Square Footage
  - Serviceable Square Footage
- Dimensioned Site Plan showing:
  - Parking
  - Business Footprint
- Digital Copies of Floor Plan & Site Plan (PDF/JPEG)

FLOOR PLAN - SCALE: 1/8" =1'

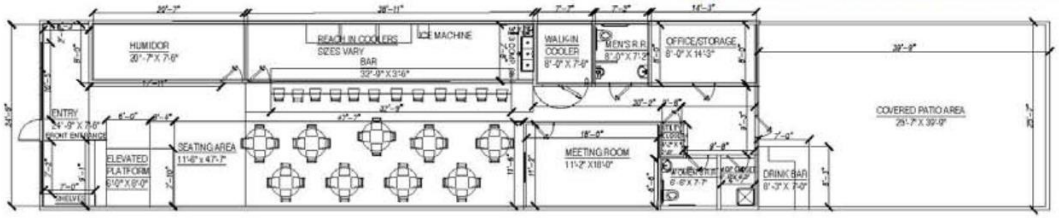

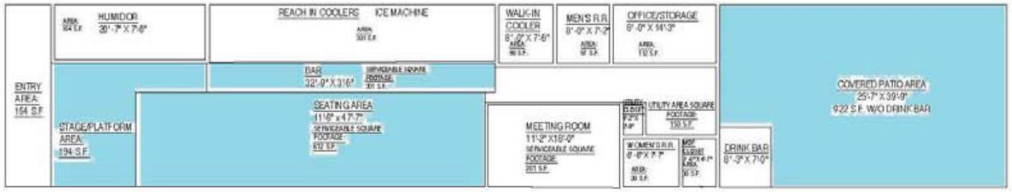

SERVICEABLE AREA: 2,029 SQUARE FEET

Oak Cliff Drafting Solutions
"Convenient, Conventional & Creative "
DALLAS, ARLINGTON, FORT WORTH,
Grand Prairie, Cedar Hill, Richardson, Mesquite, Plano, Irving, Lancaster, DeSoto, Duncanville, Irving, Garland Glenn Heights, Red Oak, Frisco
TEL: 214-586-6082
email redlines:
ocdraftingsolutions@gmail.com
O·C T·X

THESE PLANS ARE INTENDED TO PROVIDE BASIC CONSTRUCTION INFORMATION NECESSARY TO SUBSTANTIALLY BUILD THIS STRUCTURE. THESE PLANS MUST BE VERIFIED AND CHECKED BY THE BUILDER, HOMEOWNER, AND ALL CONTRACTORS OF THIS JOB PRIOR TO CONSTRUCTION. BUILDER SHOULD OBTAIN COMPLETE ENGINEERING SERVICES, HVAC, AND STRUCTURAL BEFORE BEGINNING CONSTRUCTION OF ANY KIND. NOTE: ALL FEDERAL, STATE, AND LOCAL CODES AND RESTRICTIONS TAKE PRECEDENCE OVER ANY PART OF THESE PLANS.

GREAT CARE AND EFFORT HAVE GONE INTO THE CREATION OF THESE BLUEPRINTS. HOWEVER, BECAUSE OF THE VARIANCE IN GEOGRAPHIC LOCATIONS, OAK CLIFF DRAFTING SOLUTIONS, WILL NOT ASSUME LIABILITY FOR ANY DAMAGES DUE TO ERRORS, OMISSIONS, OR DEFICIENCIES ON THESE PLANS. OWNER/BUILDER MUST COMPLY WITH LOCAL BUILDING CODES PRIOR TO COMMENCEMENT OF CONSTRUCTION.
THE PURCHASE OF THESE PLANS ENTITLES THE BUYER TO CONSTRUCT THIS HOUSE ONLY ONCE. ANY COPYING, TRACING, OR ALTERING OF THESE PLANS IS NOT PERMITTED. VIOLATORS WILL BE SUBJECT TO PROSECUTION UNDER COPYRIGHT LAWS.

Project Name & Address
216 N MAIN ST
MIDLAND, TX
79701
THE BUFFALO NICKEL
LOT 1 + N30 LOT 2 +
S10 CARRIZO STREET, BLOCK 38
VOLUME 3, PAGE 232
MIDLAND COUNTY

APPLICABLE BUILDING CODES:
2015 IBC - International Building Code
2015 IRC - International Residential Code
2015 IFC - International Fire Code
2015 IMC - International Mechanical Code
2015 IPC - International Plumbing Code
2015 IFGC - International Fuel Gas Code
2015 IECC - International Energy Conservation Code
2014 NEC - National Electrical Code

Date	Sheet #
06/20/2018	1
Scale: 1"=30'-0"	Sheet Name: SITE PLAN
Drawn By: JR	

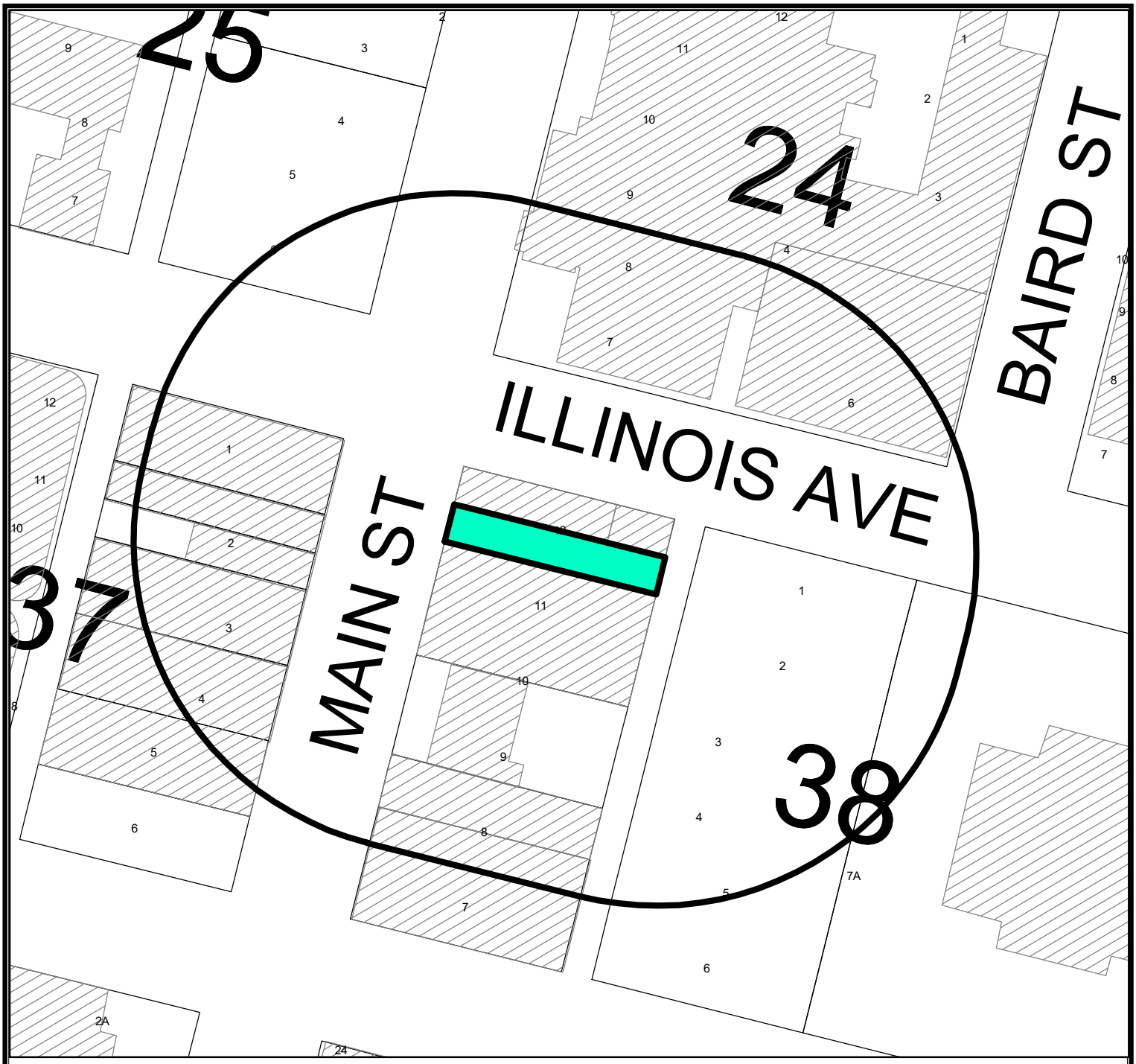

LOCATION MAP

SUD-23-0158 **Scale: 1" = 200'**

A Specific Use Designation with Term for the Sale of all Alcoholic Beverages, for On-Premises Consumption in a Bar on A 3,400-square foot portion of Lot 12, Block 38, Original Town Addition, City and County of Midland, Texas.

Generally located on the east side of North Main Street, approximately 25-feet south of East Illinois Avenue. - (Council District 2)

LEGEND

- CITY LIMITS
- PARCEL
- PRIVATE BLDGS

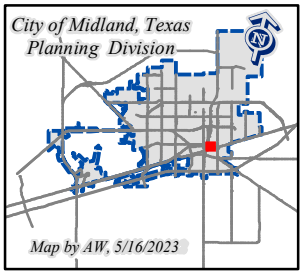

©THE CITY OF MIDLAND - 2021
THIS DATA IS NOT A SUBSTITUTION FOR A SURVEY AND NOR IS IT DESIGNED TO BE USED AS A PRIMARY TOOL IN PERMITTING OR OTHER DECISIONS BASED SOLELY ON THE INFORMATION CONTAINED HEREIN.
THE CITY OF MIDLAND SHALL NOT BE RESPONSIBLE FOR ANY DECISIONS BASED UPON THE USE OF THIS DATA.

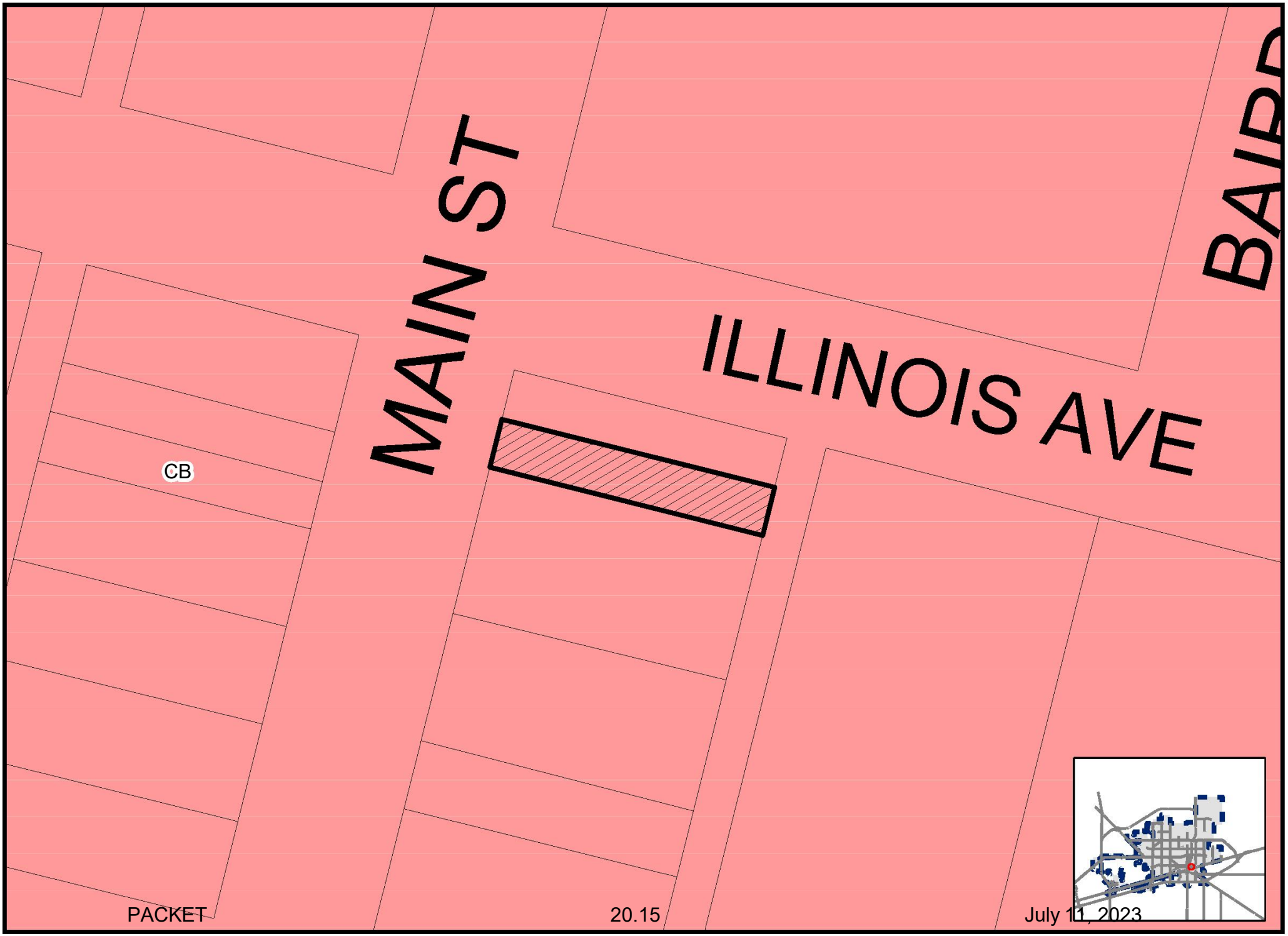

Map By AW, 5/16/23

SUD-23-0158

Scale: 1" = 200'

ZONING MAP




THE BUFFALO NICKEL
by cibolo creek
216


RAM
TEXAS
NFW-4098
Borland &
Attorneys


PPDC
PPDC
PPDC

City Council Meeting

Item Number: 21

Meeting Date: July 11, 2023

To: City Council / City Manager

From: Alexandra Walling, Senior Planner

Subject: AN ORDINANCE AMENDING THE ZONING DISTRICT MAP OF THE CITY OF MIDLAND TO GRANT A SPECIFIC USE DESIGNATION WITH TERM FOR A 1,595-SQUARE FOOT PORTION OF LOT 24, BLOCK 53, ORIGINAL TOWN, CITY AND COUNTY OF MIDLAND, TEXAS (GENERALLY LOCATED AT THE SOUTHEAST CORNER OF THE INTERSECTION OF NORTH MAIN STREET AND EAST TEXAS AVENUE), WHICH IS PRESENTLY ZONED CB, CENTRAL BUSINESS DISTRICT, ALLOWING SAID PROPERTY TO BE USED FOR THE SALE OF ALL ALCOHOLIC BEVERAGES IN A BAR FOR ON-PREMISES CONSUMPTION; MAKING SAID DESIGNATION SUBJECT TO CERTAIN CONDITIONS AND RESTRICTIONS CONTAINED HEREIN; CONTAINING A CUMULATIVE CLAUSE; CONTAINING A SAVINGS AND SEVERABILITY CLAUSE; PROVIDING FOR A MAXIMUM PENALTY OR FINE OF TWO THOUSAND DOLLARS ($2,000.00); AND ORDERING PUBLICATION (DISTRICT 2) (DEVELOPMENT SERVICES)

Purpose:

The applicant, Ariel Windsor, is requesting a Specific Use Designation with Term (SUD) for the sale of Alcoholic Beverages Sales, for On-Premises Consumption in a Bar.

Recommended City Council Action:

Approve

Fiscal Impact:

This proposal does not have a significant financial impact to the City.

Current Zoning:

CB, Central Business District.

Surrounding Zoning and Land Use:

The properties to the north are zoned CB, Central Business District and the location of businesses. The properties to the east and south are zoned PD, Planned Development District and the location of apartments. The properties to the west are zoned CB, Central Business District, and the location of businesses.

Discussion:

The property is zoned CB, Central Business District which allows for Alcoholic Beverages Sales for On-Premises Consumption with the approval of an SUD. The total bar area is 1,595-square feet with an alcohol serviceable area of 885.5-square feet. The property has an existing SUD for Alcoholic Beverages Sales for On-Premises Consumption in a bar (Ordinance No. 8953). The applicant is requesting an amendment to the current SUD to change their hours from 12:00 p.m. to 1:30 a.m., Monday through Sunday, to the new hours as specified below:

Monday through Sunday from 11 a.m. to 2 a.m. (the next day)

Per Midland City Code 5-4-4, Prohibited place of business

The sale of any alcoholic beverage is hereby prohibited by any person, where the place of business of any such dealer is within 300 feet of any church, public school, public school ground, athletic stadium used by any public school or public hospital, the measurements to be along the property lines of the street fronts and from front door to front door and in a direct line across intersections where they occur.

There are no churches, private schools, public schools, public school grounds, athletic stadium, or public hospital within 300 feet measurement along the property lines of the street fronts, and from the front door in a direct line across intersection where they occur within this site.

This project has been circulated to all City departments for review. Below are the department comments.

Fire: (Approved)

No comments or objections.

Engineering: (Approved)

No objections. [For Applicant's Information Only.]

Transportation: (Approved)

No objections. [For the Applicant's information only.]

Building Code: (Approved)

The SUD for Bourbon Street is acceptable. The property must adhere to the maximum occupant load of 59 for the alcohol serviceable area. Occupancy loads must be posted in accordance with section 1004.3 of the 2015 International Fire Code.

Planning:

The request follows the Tall City Tomorrow Comprehensive Plan, Chapter 6-Character Plan Goal 4, "Encourage the development of places where Midland residents can gather and socialize to build connections." (Tall City Tomorrow page 137). The new bar, Bourbon Street, is intended to be a destination where Midland residents can gather and socialize.

This request meets all requirements; therefore, staff recommends approval of the request of the Specific Use Designation with Term for the sale of all alcoholic beverages, for on-premises consumption, in a bar, subject to Condition A through E.

Conditions:

A. **That the serviceable area of the Establishment shall be limited to approximately 885.5-square feet as shown in Exhibit A, which is attached hereto and incorporated herein for all purposes.**

B. **That the sale and on-premises consumption of alcoholic beverages shall conform to all applicable state and local laws.**

C. **That the days and hours of alcoholic beverage sales and consumption shall be limited to: Monday through Sunday from 11:00 a.m. to 2:00 a.m. of the following day.**

D. **That the occupancy of the Establishment shall not exceed the maximum occupancy determined by the Building Code and Fire Code.**

E. **That the Establishment shall meet the requirements of the Fire Department and the Code Administration Division.**

Letters of Objection:

As of June 14, 2023, staff has not received any letters of objection.

Attachments:

Application
Floor Plan (Exhibit A)
Maps

City Manager's Office

MIDLAND Planning Division

Specific Use Designation with Term for the Sale of Alcoholic Beverages for On-Premises Consumption

Project Number: SUP-23-0160

Case Number:

Applicant *(if acting as Agent, see affidavit on page 2)* Printed Name: Ariel Windsor		Phone (432) 208-1962 Email ariel5590@outlook.com	
Address 1408 Harvest Rain St.	City Midland	State TX	Zip 79705

Property Owner Printed Name: Hilda Armendariz		Phone (432) 661-2778 Email bourbon.armen@yahoo.com	
Address 120 N. Main St.	City Midland	State TX	Zip 79701

Representative *(if different from Applicant or Property Owner)* Firm: Printed Name:		Phone ( ) Email	
Address	City	State	Zip

Street Address: 120 N. Main St. Midland, TX 79701

Business Name: Bourbon Street DC

Legal Description
Lot: 24 Block: 53 Subdivision: Original Town

Current Zoning:

Reason for Request: New Hours / New Management

Type of Business *(restaurant, bar, lounge, nightclub, etc.)*: Bar

Proposed/Current Days and Hours of Operation: Monday - Sunday 11:00am - 2:00am

Proposed Days and Hours of Alcohol Service: Monday - Sunday 11:00am - 2:00am

Total Square Footage of Business: 1595 sq. ft.

Square Footage of Alcohol Serviceable Area: 885.5 sq. ft.

Restroom Fixtures:				
	Men	**Toilets/Urinals:**	1 / 1	**Bathroom Sinks:** 1
	Women	**Toilets:**	1	**Bathroom Sinks:** 1

Submittal and Fees

Items to be submitted with this application form:

- Application Fee – Payable to the 'City of Midland'
- Dimensioned Floor Plan showing:
  - Seating
  - Exits
  - Restrooms
  - Kitchen (if applicable)
  - Total Square Footage
  - Serviceable Square Footage
- Dimensioned Site Plan showing:
  - Parking
  - Business Footprint
- Digital Copies of Floor Plan & Site Plan (PDF/JPEG)

Signatures

Applicant (signature):	Date: 5/15/23
Applicant (printed): Arid Windsor	
Property Owner (signature):	Date: 5/15/23
Property Owner (printed): HILDA (ILDA) ARMENDARIZ	

The Specific Use Designation with Term for the sale of all alcoholic beverages shall be considered officially received in the Planning office only when it has been submitted in full compliance with the provisions of Section 212 of the Texas Local Government Code and the Zoning Code of Ordinances of the City of Midland and when such required items for the application are also received.

All materials, including exhibits, submitted in support of an application, or displayed during a public hearing, shall remain the property of the City of Midland.

If an agent is authorized by the property owner to file and execute the application on behalf of the property owner, the agent must complete the affidavit below.

STATE OF TEXAS
COUNTY OF MIDLAND

Before me, the undersigned authority, on this day personally appeared Arid Windsor who, being by me duly sworn, upon oath says: That (s)he is authorized by Hilda Armendariz, the owner of the above described property, to fully represent him/her in this application and that (s)he had the legal right, power and authority to sign said owner's name hereto as his/her attorney in fact.

Authorized Agent (*signature*)

Subscribed and sworn to before me, this 15 day of May, 2023, to certify which witness my hand and seal of office.

ERNESTO G CALDERON
Notary ID #10372544
My Commission Expires
February 16, 2027

NOTARY PUBLIC, MIDLAND COUNTY, TEXAS

****Application will not be considered for scheduling until reviewed by a planner.****

FOR OFFICE USE ONLY	
☒ Property Owner Authorization	☒ Dimensioned Floor Plan
☒ Application Fee	☐ Site Plan
Check # 2458	☐ Plans in Digital Format (PDF/JPEG)
Received By:	Date:

RECEIVED
MAY 24 2023
BY: .....

****Application will not be considered for scheduling until reviewed by a planner.****

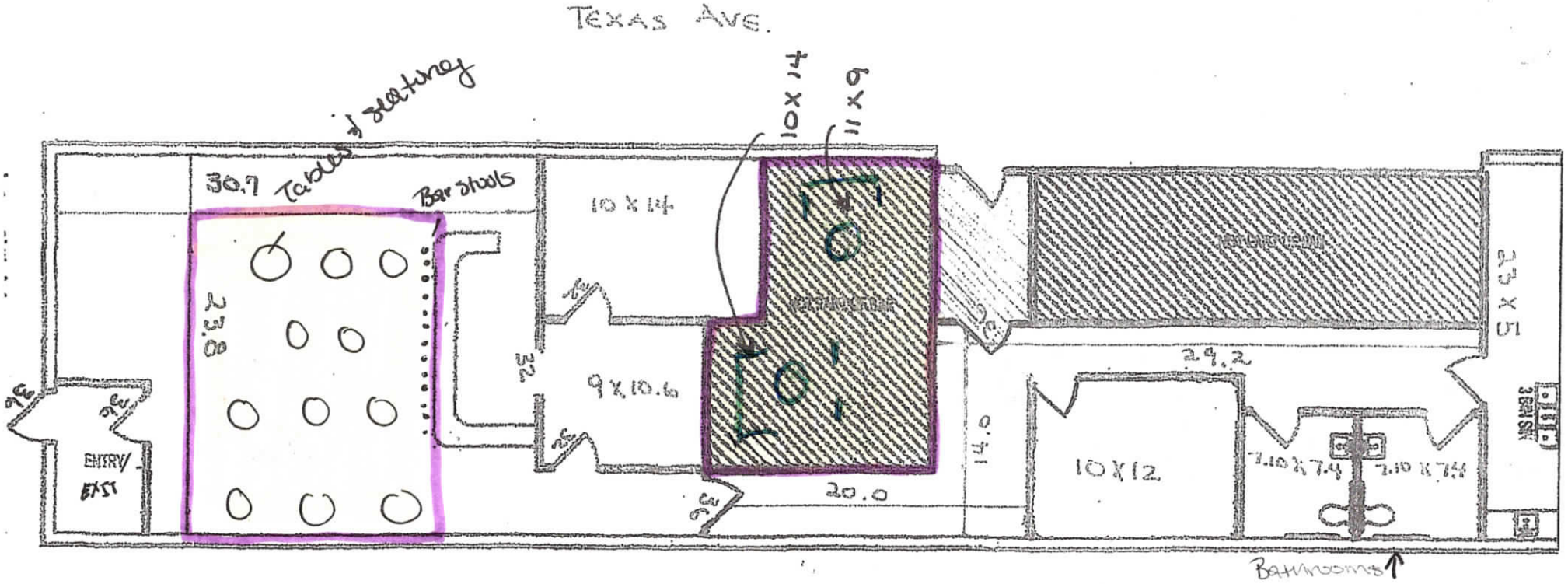

SITE PLAN

EXHIBIT A

CASE NO. S-11-016

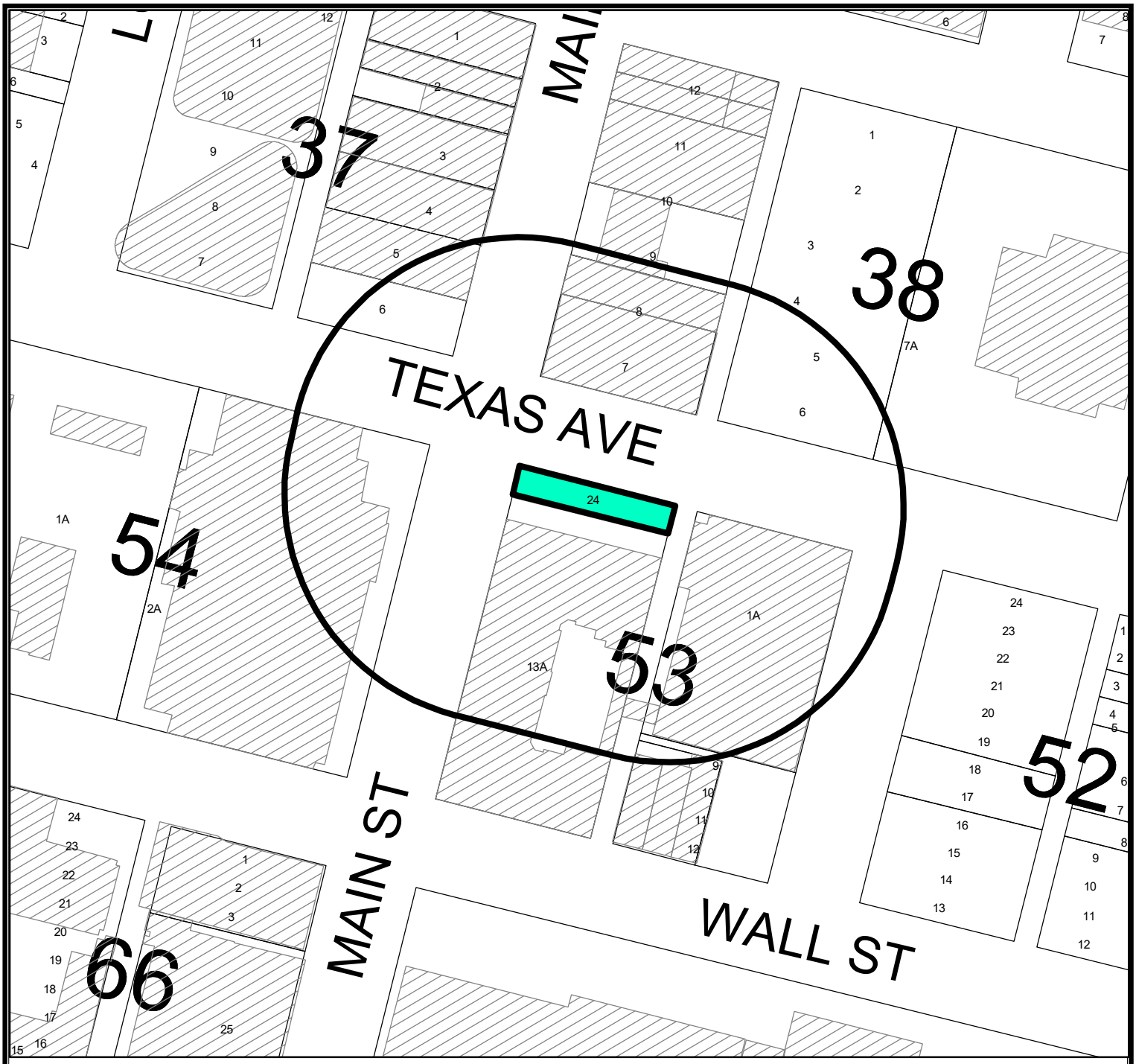

LOCATION MAP

SUD-23-0160 **Scale: 1" = 200'**

A Specific Use Designation with Term for the sale of all alcoholic beverages, for on premises consumption in a bar, on a 1,595-square foot portion of Lot 24, Block 53, Original Town, City and County of Midland, Texas.

Generally located on the southeast corner of the intersection of North Main Street and East Texas Avenue. (Council District 2)

LEGEND

- CITY LIMITS
- PARCEL
- PRIVATE BLDGS

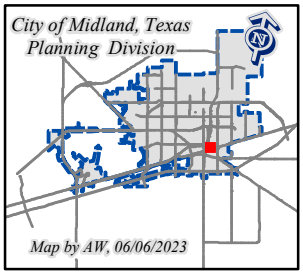

©THE CITY OF MIDLAND - 2021
THIS DATA IS NOT A SUBSTITUTION FOR A SURVEY AND NOR IS IT DESIGNED TO BE USED AS A PRIMARY TOOL IN PERMITTING OR OTHER DECISIONS BASED SOLELY ON THE INFORMATION CONTAINED HEREIN.
THE CITY OF MIDLAND SHALL NOT BE RESPONSIBLE FOR ANY DECISIONS BASED UPON THE USE OF THIS DATA.

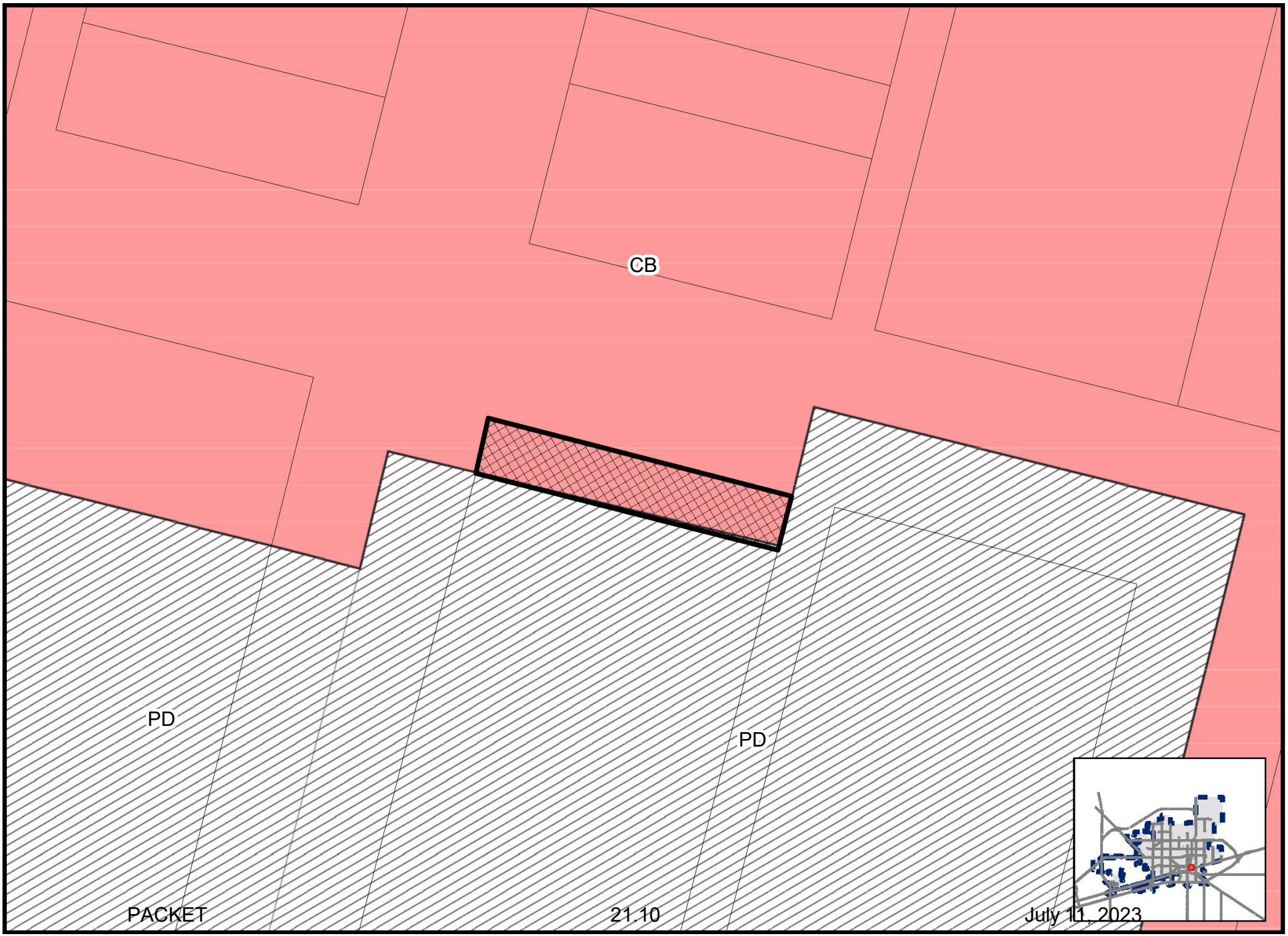

PACKET 21.10 July 11, 2023

Map By AW, 6/6/2023

SUD-23-0160

Scale: 1" = 200'

ZONING MAP

MI
PRI
OF
UCT, NOR IS IT DESIGNED
INFORMATION CONTAINED
THE USE OF THIS DATA.




LIQUOR
WINE & BEER
BOURBON ST
DC
N MAIN ST
200 100
LEASE YO
HOME T
© 2022 Google




ONE WAY

ORDINANCE NO. _____

AN ORDINANCE AMENDING THE ZONING DISTRICT MAP OF THE CITY OF MIDLAND TO GRANT A SPECIFIC USE DESIGNATION WITH TERM FOR A 1,595-SQUARE FOOT PORTION OF LOT 24, BLOCK 53, ORIGINAL TOWN, CITY AND COUNTY OF MIDLAND, TEXAS (GENERALLY LOCATED AT THE SOUTHEAST CORNER OF THE INTERSECTION OF NORTH MAIN STREET AND EAST TEXAS AVENUE), WHICH IS PRESENTLY ZONED CB, CENTRAL BUSINESS DISTRICT, ALLOWING SAID PROPERTY TO BE USED FOR THE SALE OF ALL ALCOHOLIC BEVERAGES IN A BAR FOR ON-PREMISES CONSUMPTION; MAKING SAID DESIGNATION SUBJECT TO CERTAIN CONDITIONS AND RESTRICTIONS CONTAINED HEREIN; CONTAINING A CUMULATIVE CLAUSE; CONTAINING A SAVINGS AND SEVERABILITY CLAUSE; PROVIDING FOR A MAXIMUM PENALTY OR FINE OF TWO THOUSAND DOLLARS ($2,000.00); AND ORDERING PUBLICATION

WHEREAS, the City Planning and Zoning Commission and the Governing Body of the City of Midland, Texas, in compliance with the City Charter, the City Code, and State law, have given the requisite notices by United States mail, publication and otherwise; and after holding due hearings affording a full and fair hearing to all of the property owners generally, and particularly to those interested persons situated in the affected area and in the vicinity thereof, the Governing Body of the City of Midland finds that the public convenience will be best served by granting a Specific Use Designation With Term for a 1,595-square foot portion of Lot 24, Block 53, Original Town, City and County of Midland, Texas (the "Property"), as set out hereinafter;

NOW, THEREFORE, BE IT ORDAINED BY THE CITY COUNCIL OF THE CITY OF MIDLAND, TEXAS:

SECTION ONE. That the Zoning District Map of the City of Midland, Texas, is hereby amended to grant the Property a Specific Use Designation With Term for the sale of all alcoholic beverages in a bar (the "Establishment") for on-premises consumption, together with the uses permitted in the present CB, Central Business District.

SECTION TWO. That the Property shall be subject to the following conditions and

restrictions:

A. That the serviceable area of the Establishment shall be limited to approximately 885.5 square feet as shown in Exhibit "A", which is attached hereto and incorporated herein for all purposes.

B. That the sale and on-premises consumption of alcoholic beverages shall conform to all applicable state and local laws.

C. That the days and hours of alcoholic beverage sales and consumption shall be limited to Monday through Sunday from 11:00 a.m. to 2:00 a.m. of the following day.

D. That the occupancy of the Establishment shall not exceed the maximum occupancy determined by the Building Code and Fire Code.

E. That the Establishment shall meet the requirements of the Fire Department and the Code Administration Division.

SECTION THREE. The provisions of this ordinance are to be cumulative of all other ordinances or parts of ordinances governing or regulating the same subject matter as that covered herein; provided, however, that all prior ordinances or parts of ordinances, inconsistent with or in conflict with any of the provisions of this ordinance are hereby expressly repealed to the extent of any such inconsistency or conflict.

SECTION FOUR. If any section, subsection, sentence, clause or phrase of this ordinance is, for any reason, held to be unconstitutional or invalid, such holding shall not affect the validity of the remaining portions of this ordinance. The Council of the City of Midland hereby declares that it would have passed this ordinance and each section, subsection, sentence, clause, or phrase hereof irrespective of the fact that any one or more sections, subsections, sentences, clauses, or phrases be declared unconstitutional or invalid.

SECTION FIVE. The penalty for violation of this ordinance shall be in accordance with the general penalty provisions contained in Section 1-3-1 of the City Code of Midland, Texas, which provides for a fine not exceeding two thousand dollars ($2,000.00).

SECTION SIX. The City Secretary is hereby authorized and directed to publish the descriptive caption of this ordinance in the manner and for the length of time prescribed by the law as an alternative method of publication.

The above and foregoing ordinance was duly proposed, read in full and adopted on first reading, the _____ day of _____, A.D., 2023; and passed to second reading on motion of Council member _____, seconded by Council member _____, by the following vote:

Council members voting "AYE":

Council members voting "NAY":

The above and foregoing ordinance was read in full and finally adopted by the following vote upon motion of Council member _____, seconded by Council member _____, on the _____ day of _____, A.D., 2023, at a regular meeting of the City Council:

Council members voting "AYE":

Council members voting "NAY":

PASSED AND APPROVED THIS _____ day of _____, A.D., 2023.

_____
Lori Merritt Blong, Mayor

ATTEST:

_____
Marcia Bentley-German, City Secretary

APPROVED AS TO CONTENT
AND COMPLETENESS:

_____
Charles Harrington, Director of Development Services

APPROVED ONLY AS TO FORM:

_____
John Ohnemiller, City Attorney

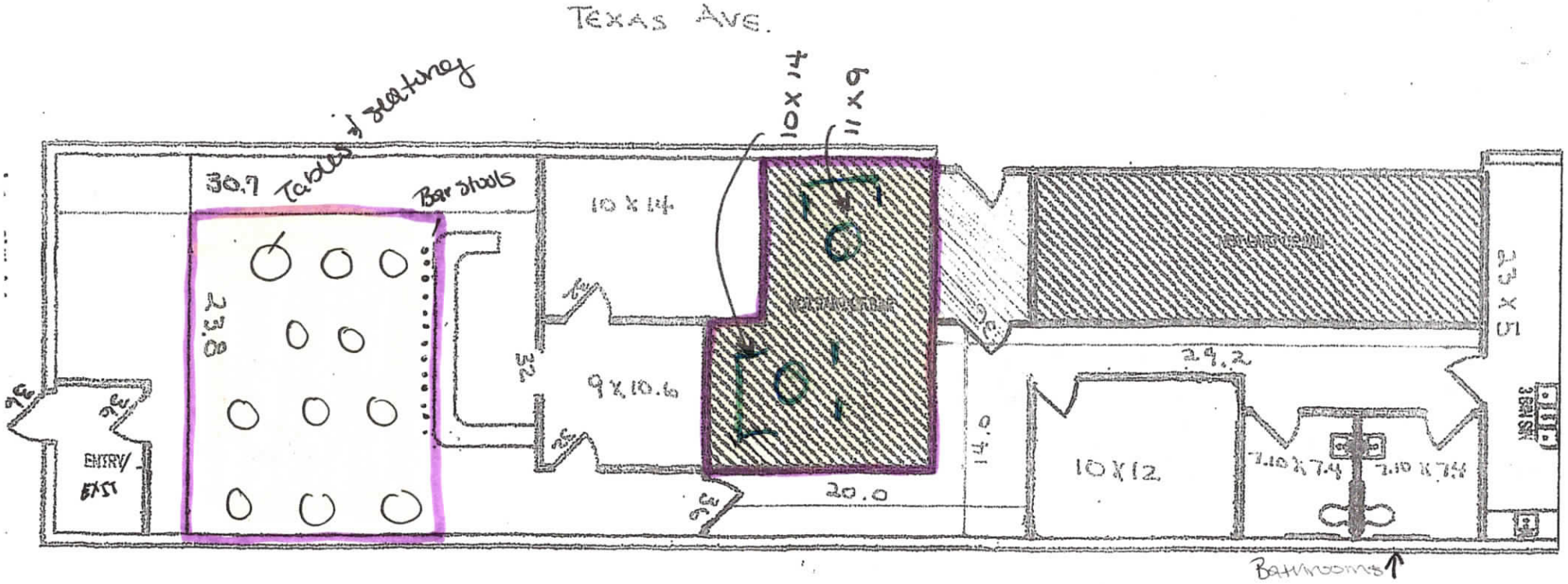

SITE PLAN

EXHIBIT A

CASE NO. S-11-016

City Council Meeting

Item Number: 22

Meeting Date: July 11, 2023

To: City Council / City Manager

From: Jeffrey Fisher, Planning Manager

Subject: AN ORDINANCE AMENDING THE ZONING DISTRICT MAP OF THE CITY OF MIDLAND TO GRANT A SPECIFIC USE DESIGNATION WITH TERM FOR LOTS 1 AND 2, BLOCK 182, SOUTHERN ADDITION, CITY AND COUNTY OF MIDLAND, TEXAS (GENERALLY LOCATED AT THE SOUTHWEST CORNER OF THE INTERSECTION OF SOUTH BIG SPRING STREET AND WEST FLORIDA AVENUE), WHICH IS PRESENTLY ZONED RR, REGIONAL RETAIL DISTRICT, ALLOWING SAID PROPERTY TO BE USED FOR THE SALE OF ALL ALCOHOLIC BEVERAGES IN A RESTAURANT FOR ON-PREMISES CONSUMPTION; MAKING SAID DESIGNATION SUBJECT TO CERTAIN CONDITIONS AND RESTRICTIONS CONTAINED HEREIN; CONTAINING A CUMULATIVE CLAUSE; CONTAINING A SAVINGS AND SEVERABILITY CLAUSE; PROVIDING FOR A MAXIMUM PENALTY OR FINE OF TWO THOUSAND DOLLARS ($2,000.00); AND ORDERING PUBLICATION (DISTRICT 2) (DEVELOPMENT SERVICES)

Purpose:

The applicant, Leovardo Leon, is requesting a Special Use Designation (SUD) for the sale of Alcoholic Beverages for On-Premises Consumption in a restaurant.

Recommended City Council Action:

Approve

Fiscal Impact:

This proposal does not have a significant financial impact to the City.

Current Zoning:

RR, Regional Retail District.

Surrounding Zoning and Land Use:

The property to the north is zoned RR, Regional Retail District, and the location of a gas station. The properties to the east are zoned RR, Regional Retail District, and the location of a restaurant and automotive dealership. The property to the south is zoned RR, Regional Retail District and the location of retail uses. The property to the west is zoned C, Commercial, and the location of retail uses.

Analysis:

The subject property is zoned RR, Regional Retail District, which allows Alcoholic Beverages Sales for On-Premises Consumption in a Restaurant with the approval of a Specific Use Designation. The total restaurant area is 2,790-square feet with an alcohol serviceable area of 987-square feet.

The applicant is requesting the following days and hours for Alcoholic Beverages Sales for On-Premises Consumption as specified below:

> **Monday through Sunday from 10:30 a.m. to 12:00 a.m. (midnight)**

Per Midland City Code Section 5.4.4. – Prohibited place of business

> *The sale of any alcoholic beverage is hereby prohibited by any person, where the place of business of any such dealer is within 300 feet of any church, public school, public school ground, athletic stadium used by any public school or public hospital, the measurements to be along the property lines of the street fronts and from front door to front door and in a direct line across intersections where they occur.*

There are no churches, private schools, public schools, public school grounds, athletic stadiums, or public hospitals within 300 feet measurement along the property lines of the street fronts, and from the front door in a direct line across the intersection where they occur within this site.

Adequate parking has been provided on the site.

This project has been circulated to all City departments for review. Below are the departments' comments.

Fire: (Approved)

No objections.

Engineering: (Approved)

No objections. [For Applicant's Information Only.]

Transportation: (Approved)

No objections. [For the Applicant's information only.]

Building Code: (Approved)

The SUD for Tacos Wey is acceptable. The property must adhere to the maximum occupant load of 65 for the alcohol serviceable area. Occupancy loads must be posted in accordance with section 1004.3 of the 2015 International Fire Code.

Code Compliance: (Approved)

No objections. [For the Applicant's information only.]

Planning: (Approved)

The request is in compliance with *Tall City Tomorrow Plan, Chapter 6-Character Plan Goal 4,* "Encourage the development of places where Midland residents can gather and socialize to build connections." (Tall City Tomorrow page 137). The approval this Specific Use Designation will provide a place to gather and socialize to build connections.

Staff recommends approval of the request for a Specific Use Designation with Term for Alcoholic Beverages Sales for On-Premises Consumption in a Restaurant, subject to Conditions A through E.

Conditions:

A. **That the serviceable area of the Establishment shall be limited to approximately 987-square feet as shown in "Exhibit "A", which is attached hereto and incorporated herein for all purposes.**

B. **That the sale and on-premises consumption of alcoholic beverages shall conform to applicable state and local laws.**

C. **That the days and hours of alcoholic beverages sales and consumption shall be limited to Monday through Sunday from 10:30 a.m. to 12:00 a.m. (midnight).**

D. **That the occupancy of the Establishment shall not exceed the maximum occupancy determined by the Building Code and Fire Code.**

E. **That the establishment shall meet all requirements of the Fire Department and Code Administration.**

Letters of Objection:

As of June 28, 2023, staff have received no letters of objection for this request.

Attachments:

Application
Floor Plan (Exhibit A)
Site Plan
Maps

Morris Williams Jr.

City Manager's Office

ORDINANCE NO. _____

AN ORDINANCE AMENDING THE ZONING DISTRICT MAP OF THE CITY OF MIDLAND TO GRANT A SPECIFIC USE DESIGNATION WITH TERM FOR LOTS 1 AND 2, BLOCK 182, SOUTHERN ADDITION, CITY AND COUNTY OF MIDLAND, TEXAS (GENERALLY LOCATED AT THE SOUTHWEST CORNER OF THE INTERSECTION OF SOUTH BIG SPRING STREET AND WEST FLORIDA AVENUE), WHICH IS PRESENTLY ZONED RR, REGIONAL RETAIL DISTRICT, ALLOWING SAID PROPERTY TO BE USED FOR THE SALE OF ALL ALCOHOLIC BEVERAGES IN A RESTAURANT FOR ON-PREMISES CONSUMPTION; MAKING SAID DESIGNATION SUBJECT TO CERTAIN CONDITIONS AND RESTRICTIONS CONTAINED HEREIN; CONTAINING A CUMULATIVE CLAUSE; CONTAINING A SAVINGS AND SEVERABILITY CLAUSE; PROVIDING FOR A MAXIMUM PENALTY OR FINE OF TWO THOUSAND DOLLARS ($2,000.00); AND ORDERING PUBLICATION

WHEREAS, the City Planning and Zoning Commission and the Governing Body of the City of Midland, Texas, in compliance with the City Charter, the City Code, and State law, have given the requisite notices by United States mail, publication and otherwise; and after holding due hearings affording a full and fair hearing to all of the property owners generally, and particularly to those interested persons situated in the affected area and in the vicinity thereof, the Governing Body of the City of Midland finds that the public convenience will be best served by granting a Specific Use Designation With Term for Lots 1 and 2, Block 182, Southern Addition, City and County of Midland, Texas (the "Property"), as set out hereinafter;

NOW, THEREFORE, BE IT ORDAINED BY THE CITY COUNCIL OF THE CITY OF MIDLAND, TEXAS:

SECTION ONE. That the Zoning District Map of the City of Midland, Texas, is hereby amended to grant the Property a Specific Use Designation With Term for the sale of all alcoholic beverages in a restaurant (the "Establishment") for on-premises consumption, together with the uses permitted in the present RR, Regional Retail District.

SECTION TWO. That the Property shall be subject to the following conditions and

restrictions:

A. That the serviceable area of the Establishment shall be limited to approximately 987 square feet as shown in Exhibit "A", which is attached hereto and incorporated herein for all purposes.

B. That the sale and on-premises consumption of alcoholic beverages shall conform to all applicable state and local laws.

C. That the days and hours of alcoholic beverage sales and consumption shall be limited to Monday through Sunday from 10:30 a.m. to 12:00 a.m. (midnight).

D. That the occupancy of the Establishment shall not exceed the maximum occupancy determined by the Building Code and Fire Code.

E. That the Establishment shall meet the requirements of the Fire Department and the Code Administration Division.

SECTION THREE. The provisions of this ordinance are to be cumulative of all other ordinances or parts of ordinances governing or regulating the same subject matter as that covered herein; provided, however, that all prior ordinances or parts of ordinances, inconsistent with or in conflict with any of the provisions of this ordinance are hereby expressly repealed to the extent of any such inconsistency or conflict.

SECTION FOUR. If any section, subsection, sentence, clause or phrase of this ordinance is, for any reason, held to be unconstitutional or invalid, such holding shall not affect the validity of the remaining portions of this ordinance. The Council of the City of Midland hereby declares that it would have passed this ordinance and each section, subsection, sentence, clause, or phrase hereof irrespective of the fact that any one or more sections, subsections, sentences, clauses, or phrases be declared unconstitutional or invalid.

SECTION FIVE. The penalty for violation of this ordinance shall be in accordance with the general penalty provisions contained in Section 1-3-1 of the City Code of Midland, Texas, which provides for a fine not exceeding two thousand dollars ($2,000.00).

SECTION SIX. The City Secretary is hereby authorized and directed to publish the descriptive caption of this ordinance in the manner and for the length of time prescribed by the law as an alternative method of publication.

The above and foregoing ordinance was duly proposed, read in full and adopted on first reading, the _____ day of _____, A.D., 2023; and passed to second reading on motion of Council member _____, seconded by Council member _____, by the following vote:

Council members voting "AYE":

Council members voting "NAY":

The above and foregoing ordinance was read in full and finally adopted by the following vote upon motion of Council member _____, seconded by Council member _____, on the _____ day of _____, A.D., 2023, at a regular meeting of the City Council:

Council members voting "AYE":

Council members voting "NAY":

PASSED AND APPROVED THIS _____ day of _____, A.D., 2023.

_____
Lori Merritt Blong, Mayor

ATTEST:

_____
Marcia Bentley-German, City Secretary

APPROVED AS TO CONTENT
AND COMPLETENESS:

_____
Charles Harrington, Director of Development Services

APPROVED ONLY AS TO FORM:

_____
John Ohnemiller, City Attorney

EXHIBIT "A"

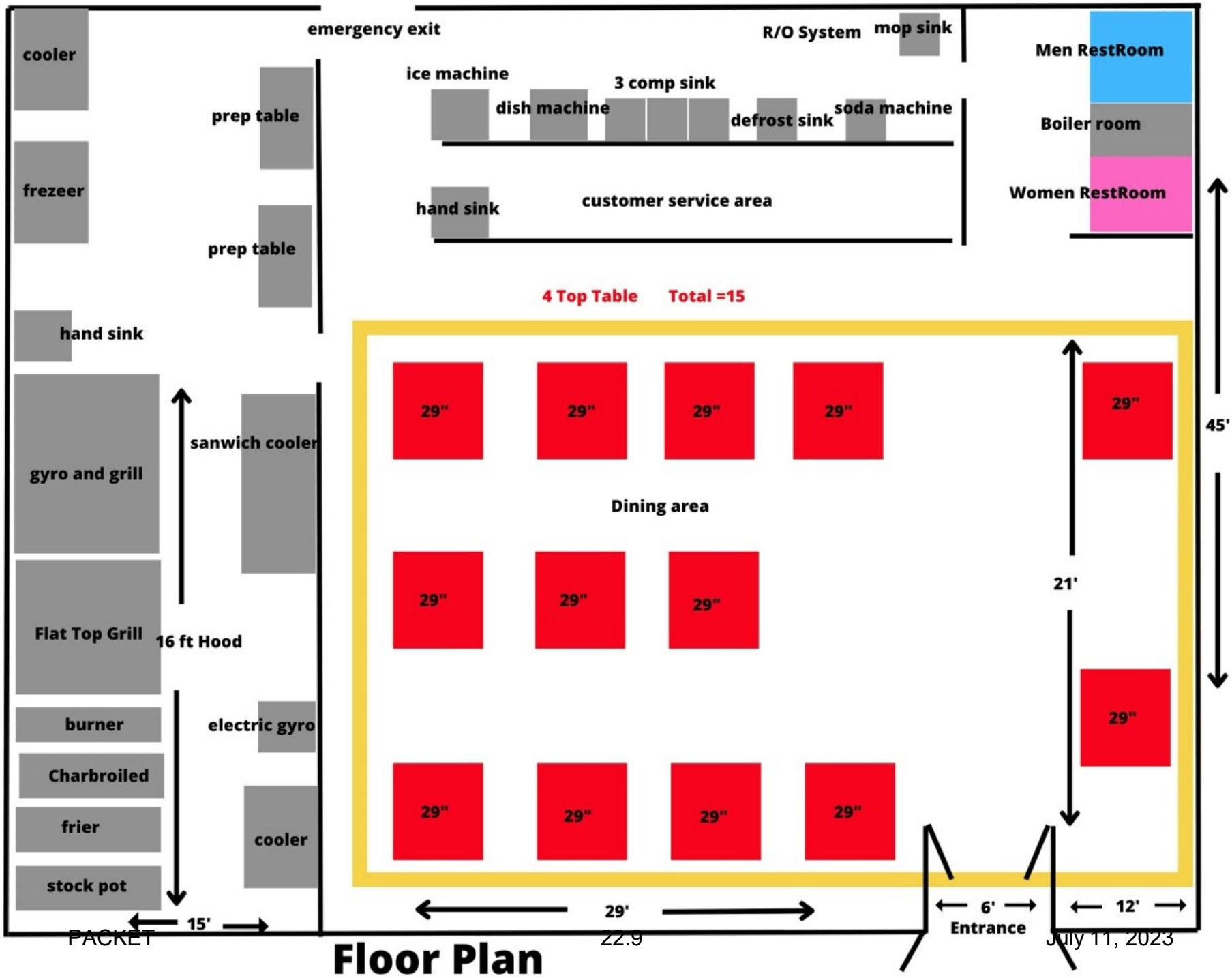

Floor Plan

MIDLAND Planning Division

Specific Use Designation with Term for the Sale of Alcoholic Beverages for On-Premises Consumption

Project Number: SUD-23-0157

Case Number: _____

Applicant *(if acting as Agent, see affidavit on page 2)* Printed Name: Leovaldo Leon		Phone (281) 830-1286 Email leovleon777@gmail.com	
Address 3611 Shell Ave	City Midland	State TX	Zip 79705
Property Owner Printed Name: George O. Scott		Phone (432) Email 2625763	
Address 1206 Storey Ave.	City Midland	State Texas	Zip
Representative *(if different from Applicant or Property Owner)* Firm: _____ Printed Name:		Phone ( ) Email	
Address	City	State	Zip

Street Address: 900 S. Big Spring Midland TX 79701

Business Name: TacosWey

Legal Description
Lot: 1&2 Block: 182 Subdivision: Southern Addition

Current Zoning: RL

Reason for Request: Restaurant

Type of Business *(restaurant, bar, lounge, nightclub, etc.)*: Restaurant

Proposed/Current Days and Hours of Operation: 7Days 10:30AM to 12AM

Proposed Days and Hours of Alcohol Service: 7Days 10:30AM to 12AM

Total Square Footage of Business: 2790

Square Footage of Alcohol Serviceable Area: 987

Restroom Fixtures:	*Men*	**Toilets/Urinals:** 1 1 2	**Bathroom Sinks:** 1
	Women	**Toilets:** 2	**Bathroom Sinks:** 1

Submittal and Fees Items to be submitted with this application form:

- Application Fee – Payable to the 'City of Midland'
- Dimensioned Floor Plan showing:
  - Seati
  - Exits
  - Rest
  - Kitchen (if applicable)
  - Total Square Footage
  - Serviceable Square Footage
- Dimensioned Site Plan showing:
  - Parking
  - Business Footprint

Signatures	July 11, 2023	22.11	PACKET
Applicant (signature): Leovardo Leon		Date: 4-18-23	
Applicant (printed): Leovardo Leon			
Property Owner (signature): George O. Sosa		Date: 4/13/23	
Property Owner (printed) : George O. Sosa			

The Specific Use Designation with Term for the sale of all alcoholic beverages shall be considered officially received in the Planning office only when it has been submitted in full compliance with the provisions of Section 212 of the Texas Local Government Code and the Zoning Code of Ordinances of the City of Midland and when such required items for the application are also received.

All materials, including exhibits, submitted in support of an application, or displayed during a public hearing, shall remain the property of the City of Midland.

If an agent is authorized by the property owner to file and execute the application on behalf of the property owner, the agent must complete the affidavit below.

STATE OF TEXAS
COUNTY OF MIDLAND

Before me, the undersigned authority, on this day personally appeared Leovardo Leon who, being by me duly sworn, upon oath says: That (s)he is authorized by George Sosa, the owner of the above described property, to fully represent him/her in this application and that (s)he had the legal right, power and authority to sign said owner's name hereto as his/her attorney in fact.

Leovardo Leon
Authorized Agent (*signature*)

Subscribed and sworn to before me, this 18 day of April, 2023 to certify which witness my hand and seal of office.

TERRI LYNN JOHNSON NOTARY PUBLIC STATE OF TEXAS NOTARY ID 1280480-5 MY COMM. EXP. 7-4-2025

Terri Lynn Johnson
NOTARY PUBLIC, MIDLAND COUNTY, TEXA

FOR OFFICE USE ONLY

☑ Property Owner Authorization	☑ Dimensioned Floor Plan
☑ Application Fee	☑ Site Plan
Check # CC	☐ Plans in Digital Format (PDF/JPEG)
Received By: DG	Date RECEIVED APR 26 2023

BY: .....

****Application will not be considered for scheduling until reviewed by a planner.****

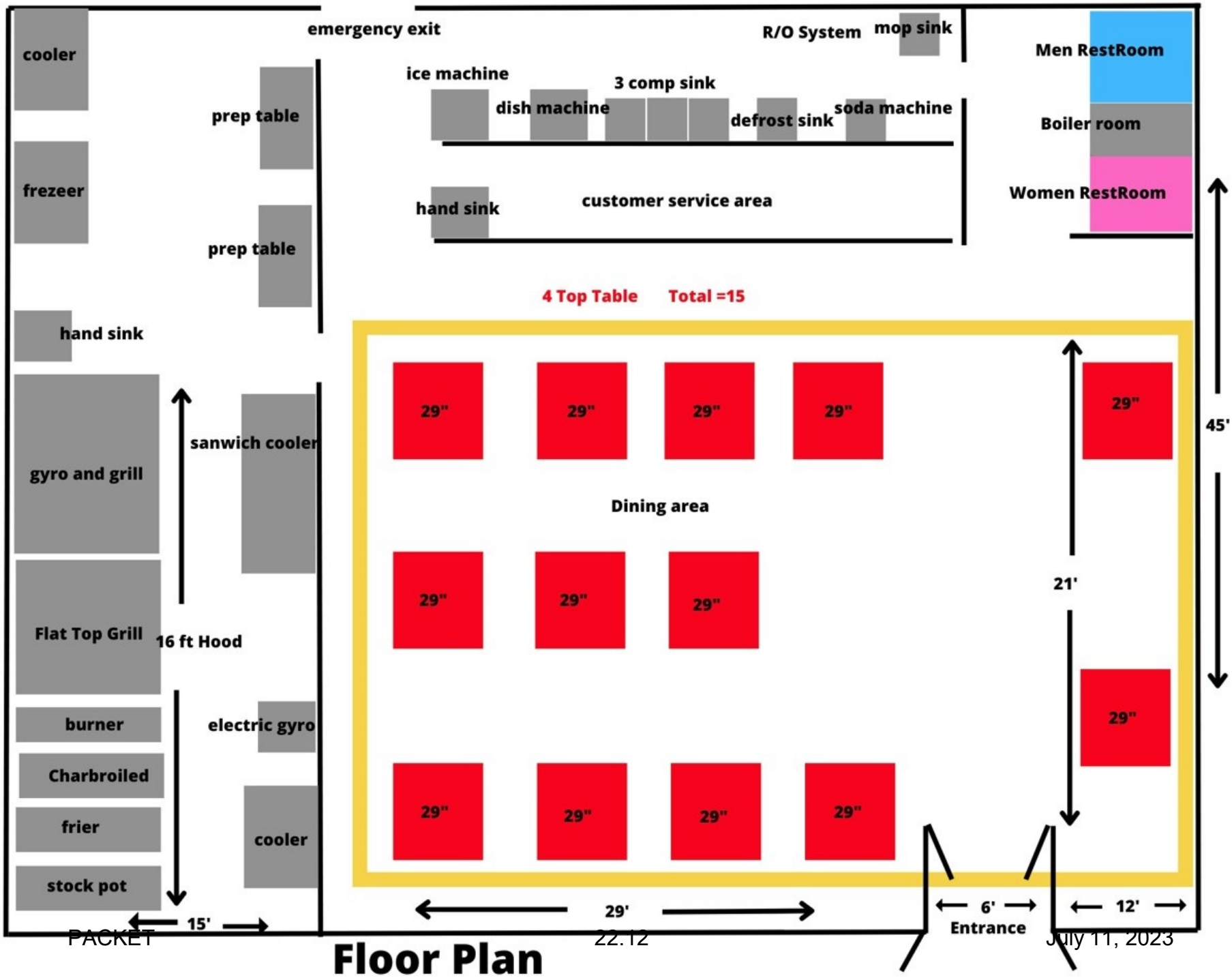
emergency exit
cooler
prep table
frezeer
prep table
hand sink
gyro and grill
sanwich cooler
Flat Top Grill
16 ft Hood
burner
electric gyro
Charbroiled
frier
cooler
stock pot
15'
ice machine
3 comp sink
dish machine
defrost sink
soda machine
R/O System
mop sink
hand sink
customer service area
Men RestRoom
Boiler room
Women RestRoom
4 Top Table
Total =15
29"
Dining area
45'
21'
29'
6'
Entrance
12'

Floor Plan



Site Plan and Parking

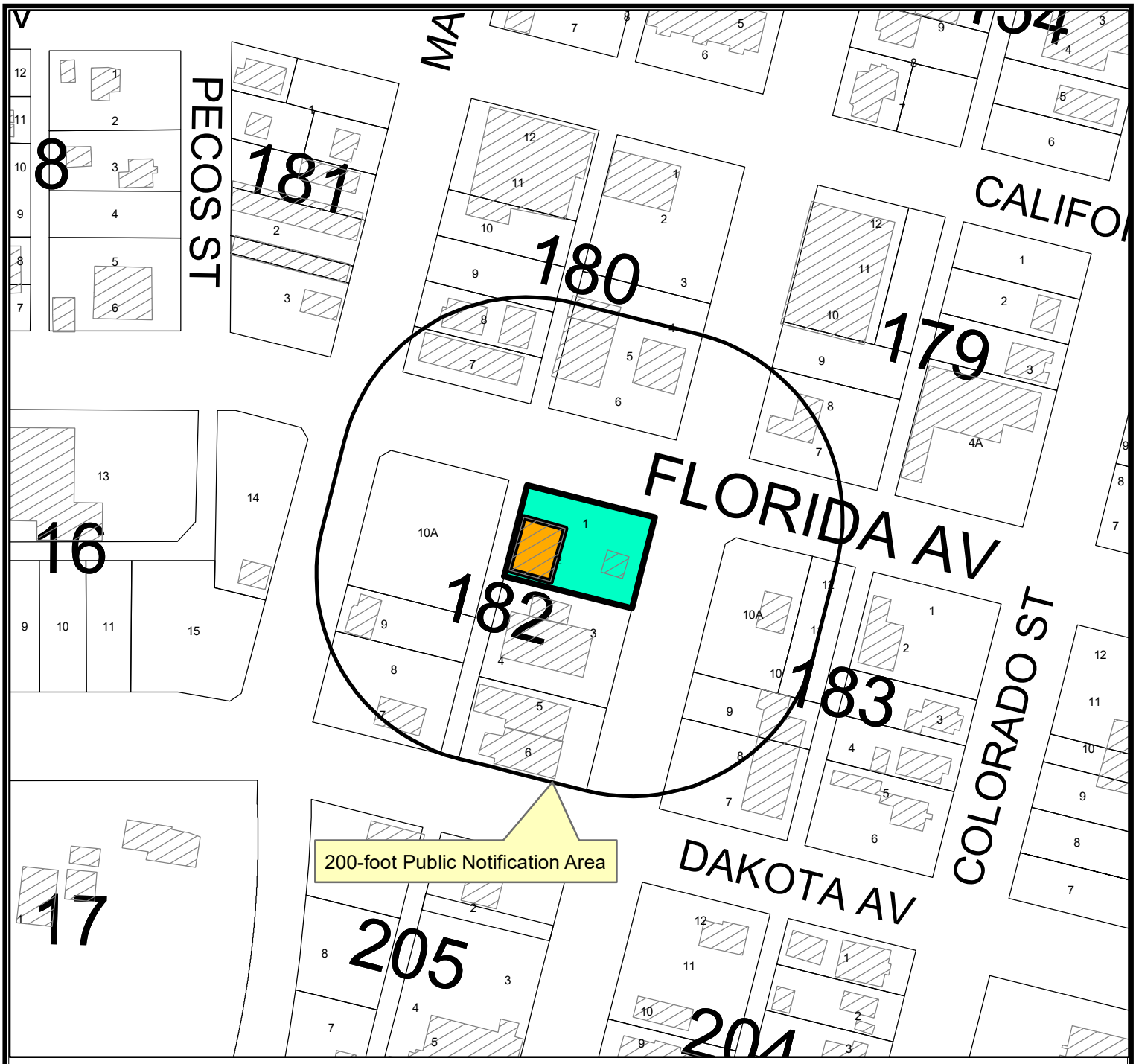

LOCATION MAP

SUD-23-0157 **Scale: 1" = 200'**

Request by Leovardo Leon for a Specific Use Designation with Term for Alcoholic Beverages Sales for On-Premises Consumption, on Lots 1 and 2, Block 182, Southern Addition, City and County of Midland, Texas.

Generally located on the southwest corner of the intersection of South Big Spring Street and West Florida Avenue. (Council District 2)

LEGEND

- CITY LIMITS
- PARCEL
- PRIVATE BLDGS

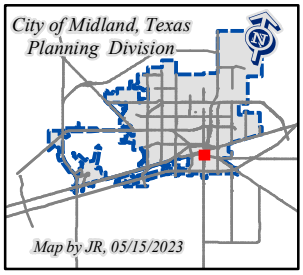

©THE CITY OF MIDLAND - 2021
THIS DATA IS NOT A SUBSTITUTION FOR A SURVEY AND NOR IS IT DESIGNED TO BE USED AS A PRIMARY TOOL IN PERMITTING OR OTHER DECISIONS BASED SOLELY ON THE INFORMATION CONTAINED HEREIN.
THE CITY OF MIDLAND SHALL NOT BE RESPONSIBLE FOR ANY DECISIONS BASED UPON THE USE OF THIS DATA.

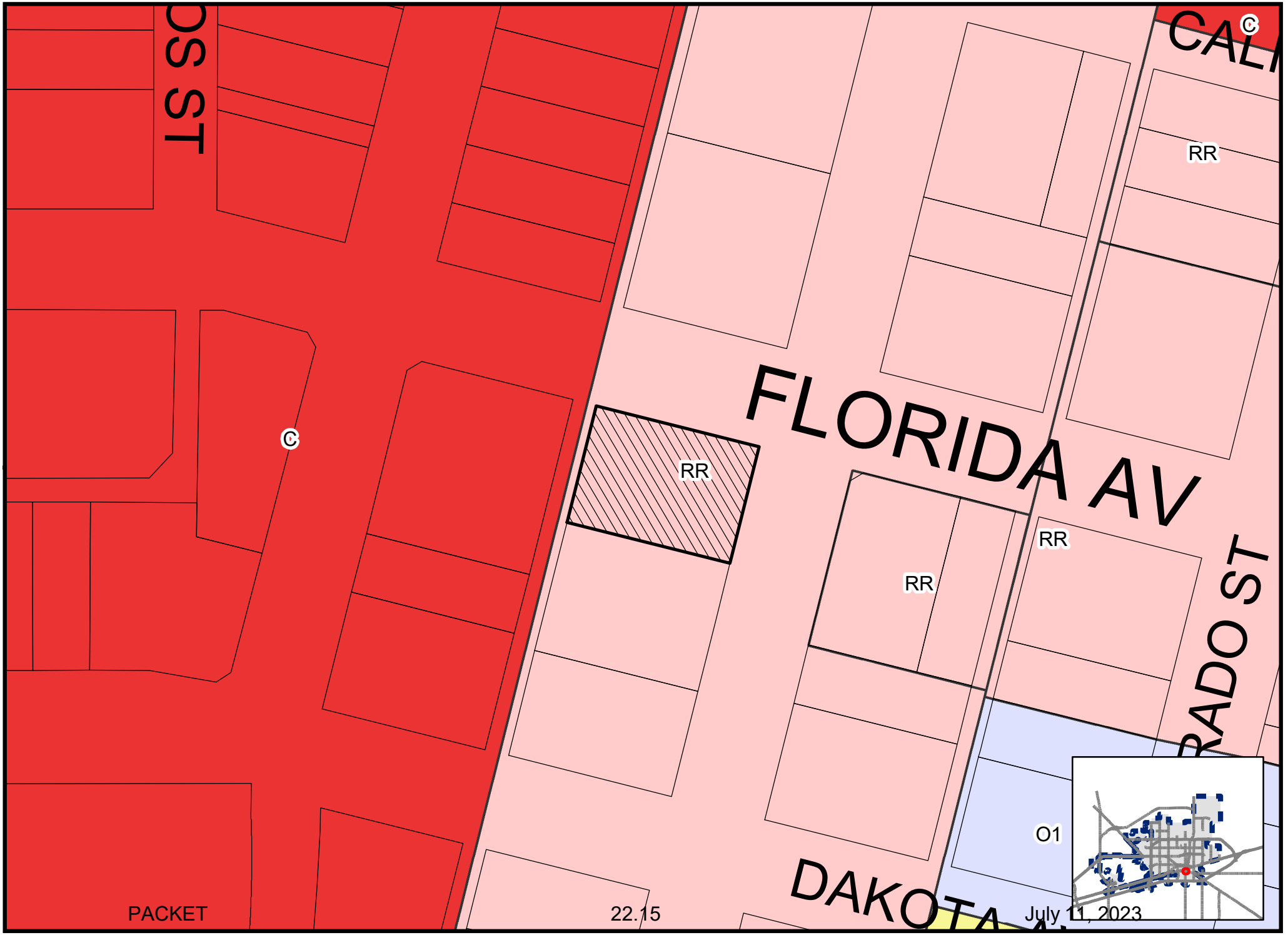

Map By LO, 6/15/2023

SUD-23-0157

Scale: 1" = 1,200'

ZONING MAP

© THE CITY OF MIDLAND - 2021: THIS DATA IS NOT A SUBSTITUTION FOR A SURVEY PRODUCT, NOR IS IT DESIGNED TO BE USED AS A PRIMARY TOOL IN PERMITTING OR OTHER DECISIONS BASED SOLELY ON THE INFORMATION CONTAINED HEREIN. THE CITY OF MIDLAND SHALL NOT BE RESPONSIBLE FOR ANY DECISIONS BASED UPON THE USE OF THIS DATA.


LOANS DEBIT CARDS
CHECKS CASHED
SNACKS ICE
SOFT DRINKS


The Car Store
The Car Store
The Car Store


THE KING SHARK
Midland
© 2023 Google


RESTAURANT

City Council Meeting

Item Number: 23

Meeting Date: July 11, 2023

To: City Council / City Manager

From: Jeffrey Fisher, Planning Manager

Subject: **AN ORDINANCE AMENDING THE ZONING DISTRICT MAP OF THE CITY OF MIDLAND TO GRANT A SPECIFIC USE DESIGNATION WITH TERM FOR A 6,529-SQUARE FOOT PORTION OF LOT 1, BLOCK 8, POLO PARK, SECTION 3, CITY AND COUNTY OF MIDLAND, TEXAS (GENERALLY LOCATED AT THE NORTHEAST CORNER OF THE INTERSECTION OF NORTH GARFIELD STREET AND WEST LOOP 250 NORTH), WHICH IS PRESENTLY ZONED PD, PLANNED DEVELOPMENT DISTRICT FOR A SHOPPING CENTER, ALLOWING SAID PROPERTY TO BE USED FOR THE SALE OF ALL ALCOHOLIC BEVERAGES IN A RESTAURANT FOR ON-PREMISES CONSUMPTION; MAKING SAID DESIGNATION SUBJECT TO CERTAIN CONDITIONS AND RESTRICTIONS CONTAINED HEREIN; CONTAINING A CUMULATIVE CLAUSE; CONTAINING A SAVINGS AND SEVERABILITY CLAUSE; PROVIDING FOR A MAXIMUM PENALTY OR FINE OF TWO THOUSAND DOLLARS ($2,000.00); AND ORDERING PUBLICATION (DISTRICT 1) (DEVELOPMENT SERVICES)**

Purpose:

The applicant, Besim Jaha, is requesting a Specific Use Designation (SUD) with Term for Alcoholic Beverages Sales for On-Premises Consumption in a Restaurant.

Recommended City Council Action:

Approve

Fiscal Impact:

This proposal does not have a significant financial impact to the City.

Current Zoning:

PD, Planned Development District for a Shopping Center. (Ordinance No. 7771).

Surrounding Zoning and Land Use:

The properties to the north are zoned O-1, Office District, and PD, Planned District for a Housing Development (Ordinance No. 7449), and the location of a hotel and assisted living facility. The properties to the east are zoned SF-2, Single-Family Dwelling District, and PD, Planned District for a Shopping Center (Ordinance No. 8261), and the location of single-family houses and mini storage units. The property to the south is zoned SF-1, Single-Family Dwelling District, and the location of the Midland Airpark. The properties to the west are zoned PD, Planned District for a Shopping Center (Ordinance No. 7256) and LR, Local Retail District, and the location of retail stores and a hotel.

Analysis:

The property is zoned PD, Planned District for a Shopping Center. The original Ordinance 5864 approved the Shopping Center with a base zoning of LR-2, Local Retail District which is now RR, Regional Retail District in the current Zoning Ordinance. The RR zoning allows for Alcoholic Beverages Sales for On-Premises Consumption in a Restaurant with the approval of an SUD. The total area of the restaurant, Fuoco, is 6,529-square feet and the proposed alcohol serviceable area is 3,569.5-square feet.

The applicant is requesting the following days and hours for Alcoholic Beverages Sales for On-Premises Consumption as specified below:

Monday through Sunday from 11 a.m. to 2 a.m. (the next day)

Per Midland City Code, Section 5-4-4, Prohibited Places of Business:

The sale of any alcoholic beverage is hereby prohibited by any person, where the place of business of any such dealer is within 300 feet of any church, public-school, public-school ground, athletic stadium used by any public school or public hospital, the measurements to be along the property lines of the street fronts and from front door to front door and in a direct line across intersections where they occur.

There are no churches, private schools, public schools, public school grounds, athletic stadium, public hospital within 300 feet measurement along the property lines of the street fronts, and from the front door in a direct line across intersection where they occur within this site.

Adequate parking has been provided on site.

This project has been circulated to all City departments for review. Below are the department comments.

Fire: (Approved)

All future development shall meet the requirements of IFC 2015 ed. and local ordinances.

Engineering: (Approved)

No objection to zone change. [For the Applicant's information only.]

Site drainage, utilities, driveway access, and traffic circulation may be adjusted during construction drawing review as necessary to receive building permit approval from Engineering and Traffic Operations. [For the Applicant's information only.]

Transportation: (Approved)

Site drainage, utilities, driveway access, and traffic circulation may be adjusted during construction drawing review as necessary to receive building permit approval from Engineering and Traffic Operations. [For the Applicant's information only.]

No objection to zone change. [For the Applicant's information only.]

Building Code: (Approved)

The SUD is acceptable. The property must adhere to the maximum occupant load of 237 for the alcohol serviceable area. Occupancy loads must be posted in accordance with section 1004.3 of the 2015 International Fire Code.

Planning: (Approved with Conditions)

The request is in compliance with the *Tall City Tomorrow Comprehensive Plan, Chapter 6-Character Plan Goal 4, which is to* "Encourage the development of places where Midland residents can gather and socialize to build connections." (Tall City Tomorrow page 137). Fuoco is a destination where Midland residents will gather and socialize.

This request meets all requirements; therefore, staff recommends approval of the request of the Specific Use Designation with Term for the sale of all alcoholic beverages, for on-premises consumption, in a bar, subject to Condition A through E.

Conditions:

A. That the serviceable area of the Establishment shall be limited to approximately 3,569.5 square feet as shown in Exhibit "A" which is attached hereto and incorporated herein for all purposes.

B. That the sale and on-premises consumption of alcoholic beverages shall conform to applicable state and local laws.

C. **That the days and hours of alcoholic beverages sales and consumption shall be limited to Monday through Sunday from 11:00 a.m. to 2:00 a.m. of the following day.**

D. **That the occupancy of the Establishment shall not exceed the maximum occupancy determined by the Building Code and Fire Code.**

E. **That the Establishment shall meet all requirements of the Fire Department and Code Administration.**

Letters of Objection:

As of June 28, 2023, staff has not received any letters of objections.

Attachments:

Application
Floor Plan (Exhibit A)
Site Plan
Maps

Morris William Jr.

City Manager's Office

ORDINANCE NO. _____

AN ORDINANCE AMENDING THE ZONING DISTRICT MAP OF THE CITY OF MIDLAND TO GRANT A SPECIFIC USE DESIGNATION WITH TERM FOR A 6,529-SQUARE FOOT PORTION OF LOT 1, BLOCK 8, POLO PARK, SECTION 3, CITY AND COUNTY OF MIDLAND, TEXAS (GENERALLY LOCATED AT THE NORTHEAST CORNER OF THE INTERSECTION OF NORTH GARFIELD STREET AND WEST LOOP 250 NORTH), WHICH IS PRESENTLY ZONED PD, PLANNED DEVELOPMENT DISTRICT FOR A SHOPPING CENTER, ALLOWING SAID PROPERTY TO BE USED FOR THE SALE OF ALL ALCOHOLIC BEVERAGES IN A RESTAURANT FOR ON-PREMISES CONSUMPTION; MAKING SAID DESIGNATION SUBJECT TO CERTAIN CONDITIONS AND RESTRICTIONS CONTAINED HEREIN; CONTAINING A CUMULATIVE CLAUSE; CONTAINING A SAVINGS AND SEVERABILITY CLAUSE; PROVIDING FOR A MAXIMUM PENALTY OR FINE OF TWO THOUSAND DOLLARS ($2,000.00); AND ORDERING PUBLICATION

WHEREAS, the City Planning and Zoning Commission and the Governing Body of the City of Midland, Texas, in compliance with the City Charter, the City Code, and State law, have given the requisite notices by United States mail, publication and otherwise; and after holding due hearings affording a full and fair hearing to all of the property owners generally, and particularly to those interested persons situated in the affected area and in the vicinity thereof, the Governing Body of the City of Midland finds that the public convenience will be best served by granting a Specific Use Designation With Term for a 6,529-square foot portion of Lot 1, Block 8, Polo Park, Section 3, City and County of Midland, Texas (the "Property"), as set out hereinafter;

NOW, THEREFORE, BE IT ORDAINED BY THE CITY COUNCIL OF THE CITY OF MIDLAND, TEXAS:

SECTION ONE. That the Zoning District Map of the City of Midland, Texas, is hereby amended to grant the Property a Specific Use Designation With Term for the sale of all alcoholic beverages in a restaurant (the "Establishment") for on-premises consumption, together with the uses permitted in the present PD, Planned Development District for a Shopping Center.

SECTION TWO. That the Property shall be subject to the following conditions and restrictions:

A. That the serviceable area of the Establishment shall be limited to approximately 3,569.5 square feet as shown in Exhibit "A", which is attached hereto and incorporated herein for all purposes.

B. That the sale and on-premises consumption of alcoholic beverages shall conform to all applicable state and local laws.

C. That the days and hours of alcoholic beverage sales and consumption shall be limited to Monday through Sunday from 11:00 a.m. to 2:00 a.m. of the following day.

D. That the occupancy of the Establishment shall not exceed the maximum occupancy determined by the Building Code and Fire Code.

E. That the Establishment shall meet the requirements of the Fire Department and the Code Administration Division.

SECTION THREE. The provisions of this ordinance are to be cumulative of all other ordinances or parts of ordinances governing or regulating the same subject matter as that covered herein; provided, however, that all prior ordinances or parts of ordinances, inconsistent with or in conflict with any of the provisions of this ordinance are hereby expressly repealed to the extent of any such inconsistency or conflict.

SECTION FOUR. If any section, subsection, sentence, clause or phrase of this ordinance is, for any reason, held to be unconstitutional or invalid, such holding shall not affect the validity of the remaining portions of this ordinance. The Council of the City of Midland hereby declares that it would have passed this ordinance and each section, subsection, sentence, clause, or phrase hereof irrespective of the fact that any one or more sections, subsections, sentences, clauses, or phrases be declared unconstitutional or invalid.

SECTION FIVE. The penalty for violation of this ordinance shall be in accordance with the general penalty provisions contained in Section 1-3-1 of the City Code of Midland, Texas, which provides for a fine not exceeding two thousand dollars ($2,000.00).

SECTION SIX. The City Secretary is hereby authorized and directed to publish the

descriptive caption of this ordinance in the manner and for the length of time prescribed by the law as an alternative method of publication.

The above and foregoing ordinance was duly proposed, read in full and adopted on first reading, the _____ day of _____, A.D., 2023; and passed to second reading on motion of Council member _____, seconded by Council member _____, by the following vote:

Council members voting "AYE":

Council members voting "NAY":

The above and foregoing ordinance was read in full and finally adopted by the following vote upon motion of Council member _____, seconded by Council member _____, on the _____ day of _____, A.D., 2023, at a regular meeting of the City Council:

Council members voting "AYE":

Council members voting "NAY":

PASSED AND APPROVED THIS _____ day of _____, A.D., 2023.

_____
Lori Merritt Blong, Mayor

ATTEST:

_____
Marcia Bentley-German, City Secretary

APPROVED AS TO CONTENT
AND COMPLETENESS:

_____
Charles Harrington, Director of Development Services

APPROVED ONLY AS TO FORM:

_____
John Ohnemiller, City Attorney

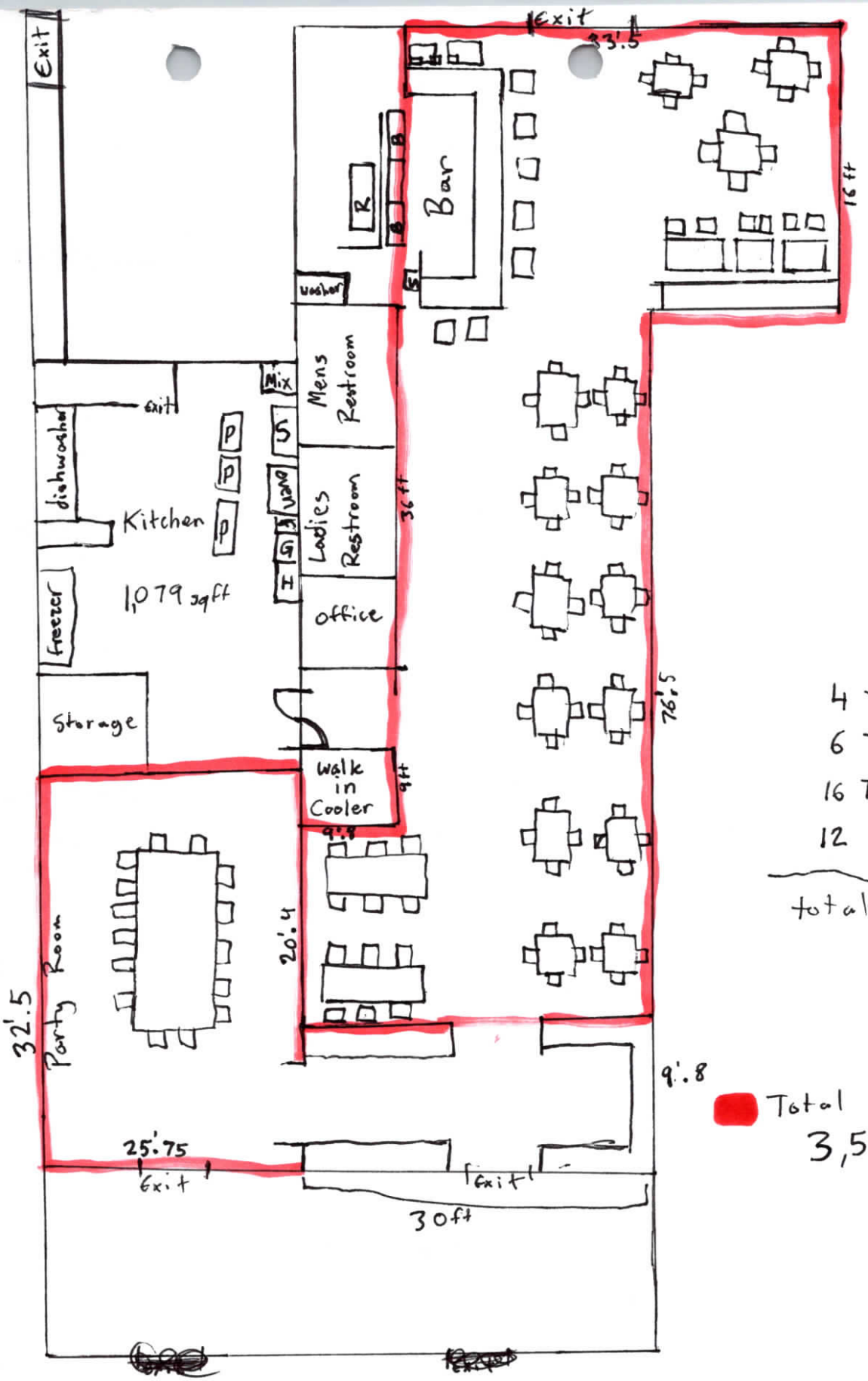

RECEIVED
MAY 22 2023
BY: .....

EXHIBIT "A"

RECEIVED
MAY 22 2023
BY:

$1300

MIDLAND Planning Division

Specific Use Designation with Term for the Sale of Alcoholic Beverages for On-Premises Consumption

Project Number:

Case Number:

Applicant *(if acting as Agent, see affidavit on page 2)* Printed Name: Besim Jaha		Phone (432) 606-0851 Email besimjaka@hotmail.com	
Address: 2515 Broadway Street	City: Big Spring	State: TX	Zip: 79720
Property Owner Printed Name: Colonnade at Polo Park		Phone (817) 927-0050 Email AP@woodcrestcapital.com	
Address: 3113 S. University Dr.	City: Fort Worth	State: Tx	Zip: 76109
Representative *(if different from Applicant or Property Owner)* Firm: Printed Name:		Phone ( ) Email	
Address	City	State	Zip

Street Address: 4610 N. Garfield Street, Midland Tx 79705

Business Name: FUOCO

Legal Description
Lot: Block: Subdivision:

Current Zoning: commercial

Reason for Request: New Restaurant

Type of Business *(restaurant, bar, lounge, nightclub, etc.)*:

Proposed/Current Days and Hours of Operation: Monday - Sunday 11:00 am - 9:00 pm

Proposed Days and Hours of Alcohol Service: Monday - Saturday 11:00 am - 2:00 am Sunday 11:00 - 2:00 am whatever allowed by law

Total Square Footage of Business: 6,529

Square Footage of Alcohol Serviceable Area: ~~6,529~~ 3,569.5 sqft

Restroom Fixtures:	*Men*	Toilets/Urinals:	1 / 2	Bathroom Sinks:	2
	Women	Toilets:	3	Bathroom Sinks:	2

Submittal and Fees

Items to be submitted with this application form:

- Application Fee – Payable to the 'City of Midland'
- Dimensioned Floor Plan showing
  - Seating
  - Exits
  - Restrooms
  - Kitchen (if applicable)
  - Total Square Footage
  - Serviceable Square Footage
- Dimensioned Site Plan showing: *Parking *Business Footprint
- Digital Copies of Floor Plan & Site Plan (PDF/JPEG)

Signatures

Applicant (signature):	Date:
Applicant (printed): Besim Jaha	
Property Owner (signature):	Date: 5.22.23
Property Owner (printed): James A Ryffel	

The Specific Use Designation with Term for the sale of all alcoholic beverages shall be considered officially received in the Planning office only when it has been submitted in full compliance with the provisions of Section 21.4 of the Texas Local Government Code and the Zoning Code of Ordinances of the City of Midland and when such required items for the application are also received.

All materials submitted in support of an application or displayed during a public hearing shall remain the property of the City of Midland.

If an agent is authorized by the property owner to file and execute application on behalf of property owner, agent must complete the affidavit below.

STATE OF TEXAS
COUNTY OF MIDLAND

Before me, the undersigned authority, on this day personally appeared _____ who, being by me duly sworn, upon oath says: That (s)he is authorized by _____ the owner of the above described property, to fully represent him/her in this application and that (s)he had the legal right, power and authority to sign said owner's name hereto as his/her attorney in fact.

Subscribed and sworn to before me, this 22 day of May 2023 to certify which witness my hand and seal of office.

BIANCA M REYES
Notary ID #1
My Commiss
April 13

Notary Public

BIANCA M REYES
Notary ID #133704295
My Commission Expires
April 13, 2026

FOR OFFICE USE ONLY

- ☒ Property Owner Authorization
- ☒ Application Fee
- Check # Cash
- ☒ Dimensioned Floor Plan
- ☒ Site Plan
- ☐ Plans in Digital Format (PDF/JPEG)

Received By DM Date

RECEIVED
MAY 22 2023
BY: .....

Application will not be considered for scheduling until reviewed by a planner.

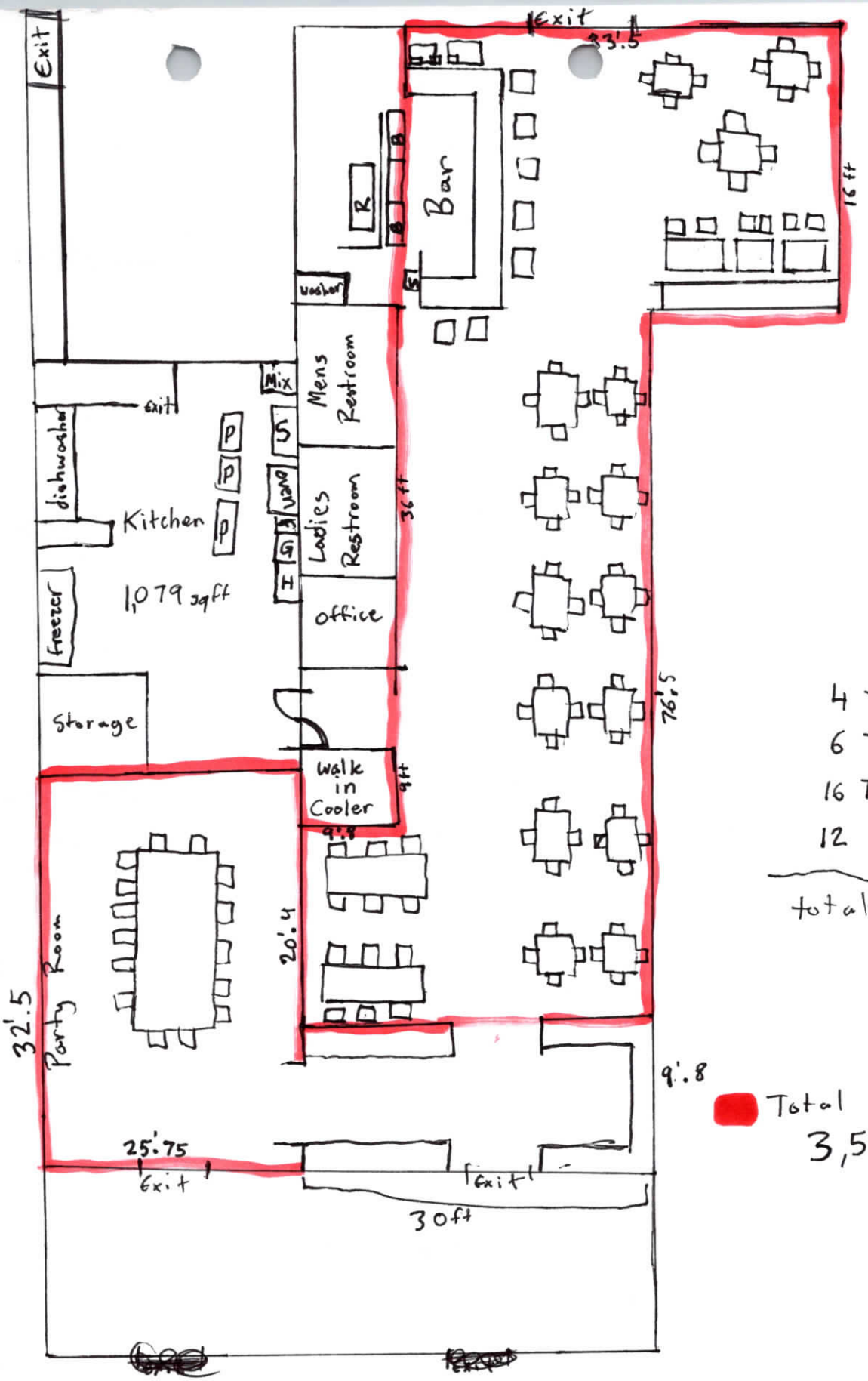

RECEIVED
MAY 22 2023
BY: .....



RECEIVED
MAY 22 2023

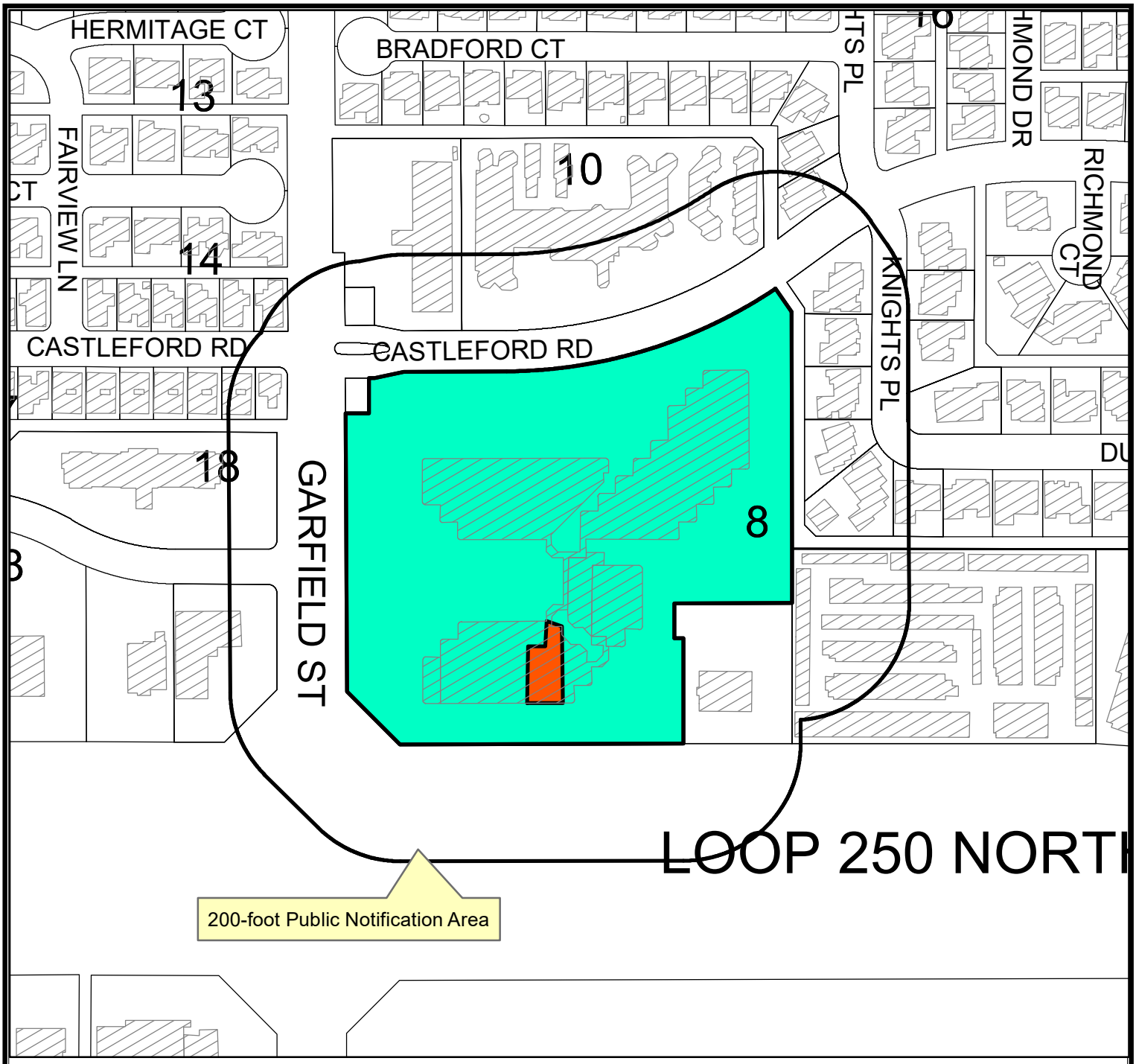

LOCATION MAP

SUD-23-0159 **Scale: 1" = 2,931'**

Consider a request by Besim Jaha for a Specific Use Designation with Term for the Sale of all Alcoholic Beverages for on premises consumption in a Restaurant on 6, 529 square foot portion of Lot 1, Block 8, Polo Park, Section 3, City and County of Midland, Texas.

Generally located northeast of the intersection of North Garfield Street and West Loop 250 North. (Council District 1)

LEGEND

- CITY LIMITS
- PARCEL
- PRIVATE BLDGS

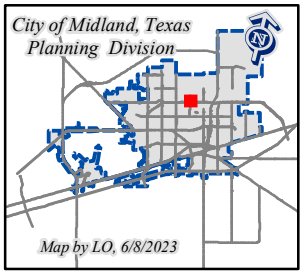

©THE CITY OF MIDLAND - 2021
THIS DATA IS NOT A SUBSTITUTION FOR A SURVEY AND NOR IS IT DESIGNED TO BE USED AS A PRIMARY TOOL IN PERMITTING OR OTHER DECISIONS BASED SOLELY ON THE INFORMATION CONTAINED HEREIN.
THE CITY OF MIDLAND SHALL NOT BE RESPONSIBLE FOR ANY DECISIONS BASED UPON THE USE OF THIS DATA.

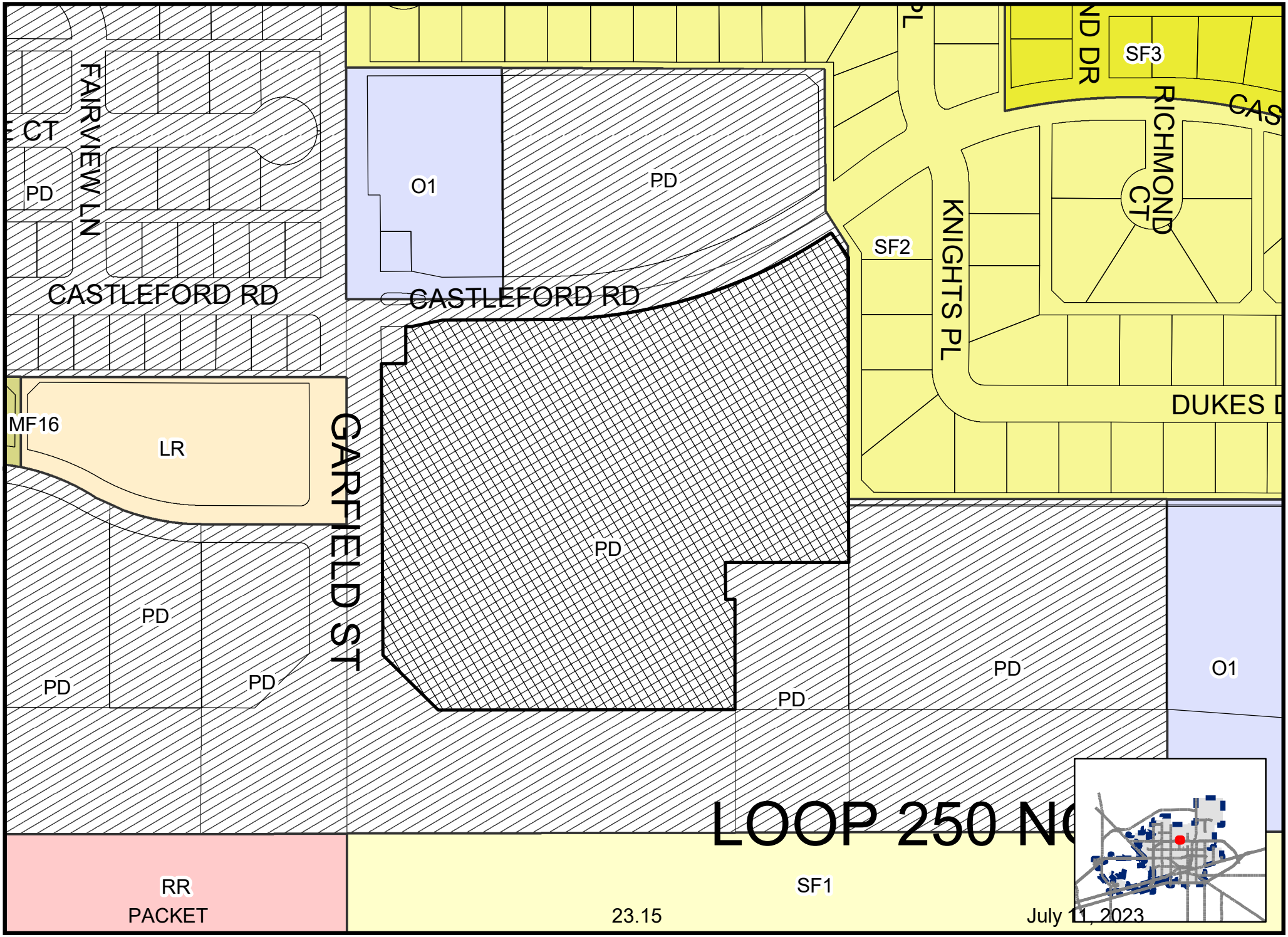

Map By LO, 06/13/2023

SUD-23-0159

Scale: 1" = 2,358'

ZONING MAP

© THE CITY OF MIDLAND - 2021: THIS DATA IS NOT A SUBSTITUTION FOR A SURVEY PRODUCT, NOR IS IT DESIGNED TO BE USED AS A PRIMARY TOOL IN PERMITTING OR OTHER DECISIONS BASED SOLELY ON THE INFORMATION CONTAINED HEREIN. THE CITY OF MIDLAND SHALL NOT BE RESPONSIBLE FOR ANY DECISIONS BASED UPON THE USE OF THIS DATA.


NAIL & SPA
Cindie's
ELEMENT
IMMERSIVE GAMING EXPERIENCE


ELEMENT
IMMERSIVE GAMING EXPERIENCE
ELEMENT
INTERACTIVE ENTERTAINMENT


FUOCO ITALIAN CUISINE
FUOCO
PARKING


TATTOO
THE FIRE PLACE
FORESIGHT

City Council Meeting

Item Number: 24

Meeting Date: July 11, 2023

To: City Council / City Manager

From: Adrian Acosta, Manager, Engineering (Development)

Subject: Motion approving a request by Magrym Consulting, Inc., to defer paving and water improvements for Lindsay Acres, Section 14, and to waive the corresponding financial security guarantee valued at $269,089, an amount equal to the estimated cost to construct the public infrastructure. The subject property is generally located east of Moran Street and north of Marlin Avenue. The property is within the corporate limits of the City of Midland (DISTRICT 2) (ENGINEERING SERVICES)

Purpose:

Motion approving a request by Magrym Consulting,Inc., to defer paving and water improvements for Lindsay Acres, Section 14, and to waive the corresponding financial security guarantee valued at $269,089.00, an amount equal to the estimated cost to construct the public infrastructure. The subject property is generally located east of Moran Street and north of Marlin Avenue. The property is within the corporate limits of the City of Midland.

Recommended City Council Action:

Deny

Fiscal Impact:

Water Distribution $ 82,823.00
Wastewater Collection $ 0.00
Paving $ 186,266.00
Sidewalk $ 0.00
Drainage $ 0.00

Total Value of Deferral $ 269,089.00

Discussion:

Lindsay Acres, Section 14 is proposed as a 0.94-acre subdivision. The five-tract subdivision is located at the northeast corner of the intersection of Moran Street and Marlin Avenue, within the corporate limits of the City of Midland.

Magrym Consulting Inc., on behalf of the developer, Daniel Lira, has requested to defer paving and water improvements, and waive the corresponding financial security guarantee, which is equal to 100% of the developer's portion of the construction costs. The developer is not requesting to defer the drainage study. A drainage study will be required.

Paving:
Moran Street and Marlin Avenue is not currently constructed to City of Midland standards along the frontage of the proposed development. Magrym Consulting is requesting to defer paving improvements along this stretch of Moran Street and Marlin Avenue. The obligated paving improvements along the platted frontage will be installed by the city as a COMPASS Project. Based on these circumstances, it is the recommendation of Engineering staff to accept the deferral request for paving improvements.

Water:
Magrym Consulting is requesting to defer water utility improvements being installed along the platted frontage of both Moran Street and Marlin Avenue. The nearest water main is a 6-inch pipeline located approximately 115 feet north of the subdivision at the intersection of Moran Street and West Montgomery Avenue. The City of Midland is currently designing the extension of the water main along Camp Street, Marlin Avenue, and Johnston Street, thus creating a loop with the 6-inch water main in Montgomery Avenue. The timeline for construction has not yet been announced. Based on these circumstances, it is the recommendation of Utilities staff to have the developer provide a $82,823.00 security for water improvements along the platted frontage of Marlin Avenue and to accept the deferral request for water improvements along Moran Street.

Engineering Staff will support the determination of the council regarding the deferral of paving improvements. However, Utilities does not support the deferral of water improvements along Marlin Avenue. It is recommended that the developer provide the $82,823.00 security for water improvements.

Should Council agree to the deferral for one or all improvements construction, staff will nevertheless require that the following note by added to the Final Plat.

The installation of public improvements may be required by the City of Midland at such time as the property is rezoned for a more intensive use.

Attached are the deferral request and opinion of probable cost prepared by Magrym Consulting Inc., a Preliminary Plat prepared by Schumann Engineering, and a location map prepared by staff.

Morris Williams Jr.

City Manager's Office

DEFERRAL REQUEST

LINDSAY ACRES SECTION 14
MIDLAND COUNTY, TEXAS

CLIENT:
Schumann Engineering Co.

PROJECT NUMBER:
23-110

REPORT DATE:
January 20, 2023
Revised: February 15, 2023
Revised: March 30. 2023
Revised: May 12, 2023
Revised: May 30, 2023

Magrym Consulting, Inc.
110 W. Louisiana Ave Ste. 314
Midland, TX 79701

PACKET

Phone: 432.999.2737
www.magrym.com

January 20, 2023
Revised: May 30, 2023

Jose Ortiz
Engineering Services Director
City of Midland
300 N. Loraine St.
Midland, TX 79701

Re: **Deferral Request**
Lindsay Acres, Section 14
A replat of the west 608.00 feet of the north 134.4 feet of tract 6, Lindsay Acres Addition, City and County of Midland, Texas.

Dear Mr. Ortiz:

Magrym Consulting Inc., on behalf of the property owner, Daniel Lira, is respectfully requesting deferrals for the construction of public improvements of water distribution and paving, and to waive the financial security guarantee associated with public improvements with a value of **$269,089.00**. This letter presents a discussion of the public infrastructure and deferral request related to the Lindsay Acres, Section 14.

Should you have any questions, please do not hesitate to contact us at claudius.sanchez@magrym.com or 432-999-2737.

Sincerely,

Magrym Consulting, Inc.



Claudius Sanchez Czyzewska, P.E., CFM
Principal

1.0 INTRODUCTION

1.1 Location Map

Lindsay Acres, Section 14 is a replat of the west 608.00 feet of the north 134.4 feet of tract 6, Lindsay Acres Addition, City and County of Midland, Texas. The property is on the east side of Moran Street and adjacent to Marlin Street.

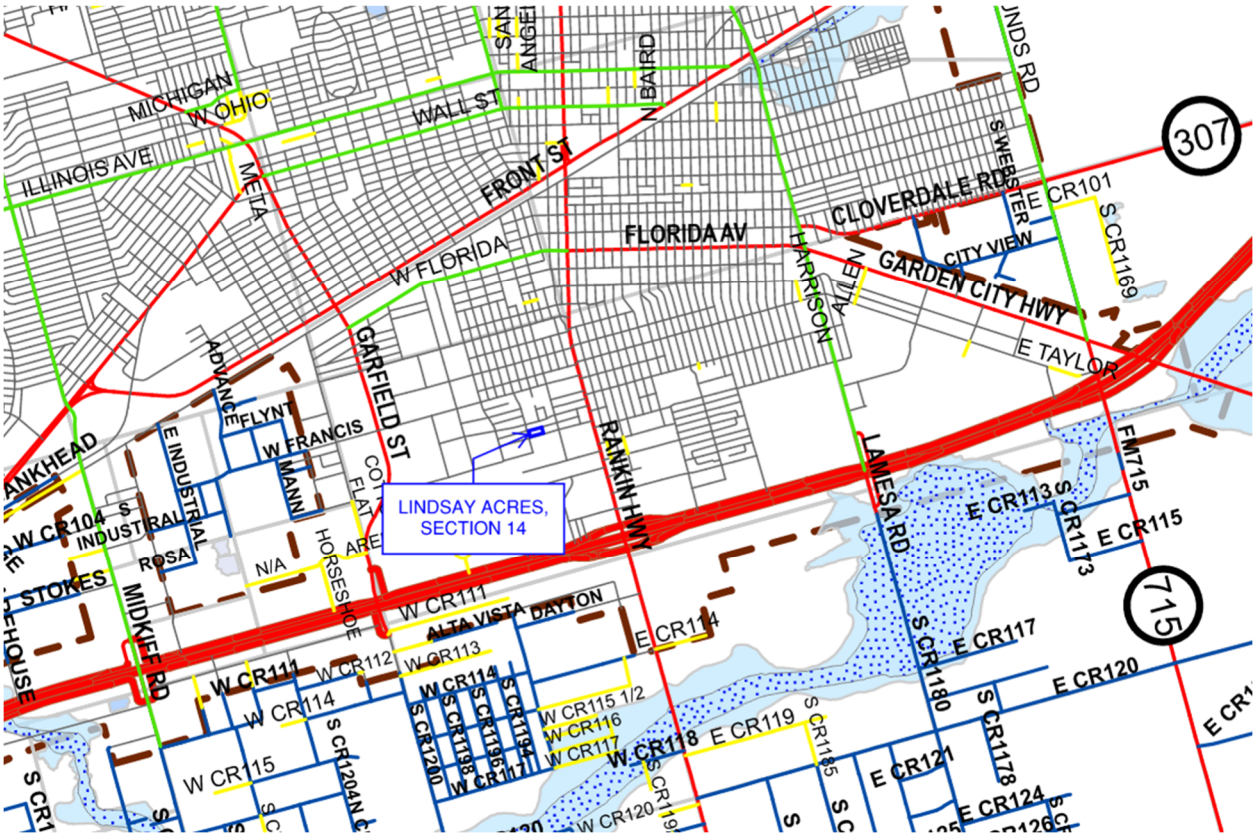

Figure 1: Project Location Map

1.2 Description of Property & Project

The project consists of a 5-lot subdivision for Residential use, each lot with sizes varying from 0.13 to 0.26 acres. Access to the subdivision will be accomplished through Marlin Street which is an existing unpaved City Street with a 60-foot right-of-way, in poor condition. And Moran Street which is also an existing unpaved City Street with a 60-foot right-of-way, in poor condition.

2.0 WATER DISTRIBUTION

Lindsay Acres, Section 14 is located in an area where public water facilities are not currently accessible. Private water wells will be constructed for each lot in the subdivision in accordance with City of Midland Code of Ordinances Title 11-2-5-(A)-3-(b)-(2).

Deferral value: $82,823.00

The nearest water main is located at the intersection of Moran Street and Marlin Avenue. According to recent communications with City staff, the City of Midland is currently designing the extension of the water main along Camp Street, Marlin Avenue and Johnson Street, thus creating a loop with the 6-inch water main in Montgomery Avenue.

3.0 PAVING

Lindsay Acres, Section 14 is located adjacent to Marlin Street to the south, Moran Street to the west. The opinion of probable cost was calculated in accordance with City of Midland Code of Ordinances Title 11-2-6-(B)-1. The criteria used was local street classification with an adjacent zoning SF3 where the developer's share corresponds to the full cost of the street, based on a maximum 40 feet width, including C&G and local construction standards, for one side of the road to which the subdivision abuts.

Deferral value: $186,266.00

4.0 ENCLOUSERS

- Sketch plat comments
- Preliminary Plat
- Summary of Public Improvements -Opinion of Probable Cost worksheets

Planning and Zoning Commission

Approved for Agenda:
Elizabeth Shaughnessy

MEETING DATE: **November 21, 2022**

TO: **PLANNING AND ZONING COMMISSION**

FROM: **Kelly Martinez, Senior Planner**

SUBJECT: **Motion approving with staff's recommended conditions, a proposed Preliminary Plat of Lindsay Acres, Section 13, being a replat of The West half of the West 608-feet of the north 134.4-feet of Tract 6, Lindsay Acres Addition, City and County of Midland, Texas. (Generally located on the northeast corner of the intersection of Marlin Avenue and Moran Street - Council District 2 (DEVELOPMENT SERVICES)**

Recommended Planning and Zoning Commission Action:

__X__ **Approve** _____ **Deny** _____ **Directional/Informational**

Details of Request:

The applicant, Schumann Engineering, is requesting to replat the West half of the West 608-feet of the north 134.4-feet of Tract 6, Lindsay Acres Addition, City and County of Midland, Texas., to divide one tract of land into 5 lots. This is a residential replat; therefore, a public hearing is required.

Current Zoning:

MH, Manufactured Housing District

Departmental Review:

This request has been routed to all respective departments for internal review. The comments are below.

BUILDING CODE: (Approved)

No issues. All future structures must adhere to the 2018 International Building Codes, the 2015 International Energy Code, the 2020 NEC requirements, the 2015 International Fire

Codes, local city ordinances, zoning requirements, established setbacks, and floodplain requirements if necessary. Code versions are subject to change depending on time of new code edition adoption in the City of Midland and date of permit application.

SURVEYOR: (Approved with Conditions)

Moran St. shown on the west side of plat does not appear to be a 60' right-of-way.

ENGINEERING: (Approved with Conditions)

IMPACT FEES: Okay as shown. [For the Applicant's information only.]

ROW: See Transportation's comments. [For the Applicant's information only.]

PAVING: Moran and Marlin are sub-standard. Construct to City standards for entire platted frontage or request a deferral. [Reference City Code Section 11-2-3(G)1 & 11-2-4(A)2(a)]

WATER: None existing. Construct to City standards along entire platted frontage, serving all lots with looped system. [Reference City Code Section 11-2-3(G)1 & 11-2-4(A)2(a)]

FIRE HYDRANTS: Required as needed to meet NFPA, IFC & City Fire Code; and/or comply with directives of City Fire Marshal. After January 14, 2020 - Fire hydrants shall be spaced no more than 500' apart, Pressure Indicator Rings are to be installed and will require the developers/contractors to pay for the flow test. [For the Applicant's information only.]

PRO RATA: None. [For the Applicant's information only.]

SEWER: 6" wastewater line exists in the alley north of tract, okay as it. No public wastewater improvements required. [For the Applicant's information only.]

DRAINAGE: Drainage study not required for development into single family residences. Development considered infill. [For the Applicant's information only.]

EASEMENTS: Show existing and proposed. [For the Applicant's information only.]

SIDEWALKS: Required with building permit. [For the Applicant's information only.]

DIMENSION: * * *

OTHER: * * *

TRANSPORTATION: (Approved with Conditions)

Provide 10 ft x 10 ft intersection corner clips at property corners adjacent to all public street intersections. [Reference City Code Section 11-2-5(C)3(k).]

Label 20 ft Alley as right-of-way dedication.

No additions or changes to site access are approved with plat or zoning review. Driveways or other access points are approved only with construction drawing review. [For the Applicant's information only.]

FIRE: (Approved)

Future development shall meet the requirements of IFC 2015 ed. and local ordinances.

Oil and Gas: (Approved)

No Oil and Gas Issues. Informational: No Oil or Gas wells identified within 500 ft. permitted well radius or in the 135 ft. non-permitted well radius of location on plat. Please note if oil & gas wells are not identified or left off plat, this could prevent receiving city permits for structures. Any plugged and abandoned well would need to be identified.

GIS: (Approved)

The survey matches previous plat.

PLANNING: (Approved with Conditions)

Utility company names have changed. [Informational]

Double check the legal description under the owner's certificate. [Informational]

This plat should be Lindsay Acres, Section 13. [Informational]

Double check the width of existing ROW (see surveyor's comment)

Label all existing and proposed easements near the plat. There is an easement east of this plat that is labeled incorrectly as a 20 ft alley. [Midland City Code 11-2-3(D)4(f)] [Midland City Code 11-2-3(H)3(b)11]

Under the Certificate of Approval, it should read for approval of the commission not by the director of development services. [Midland City Code 11-2-3(H)3(m)3]

Staff recommends approval of the Preliminary Plat of Lindsay Acres, Section 13, Subject to condition A through D.

Conditions:

A. **Approval of this preliminary plat is subject to the final plat containing 10'x10' corner clips adjacent to all public street intersections. [Midland City Code Section 11-2-5(C)3(k)]**

B. Approval of this preliminary plat is subject to the final plat containing all existing and proposed easements. [Midland City Code 11-2-3(D)4(f)] [Midland City Code 11-2-3(H)3(b)11]

C. Approval of this preliminary plat is subject to the final plat containing an accurate certificate of approval. [Midland City Code 11-2-3(H)3(m)3]

D. Approval of this preliminary plat is subject to the final plat containing the accurate ROW width of Moran Street. [Midland City Code 11-2-3(H)3(6)]

Attachments:

Application
Proposed Preliminary Plat
Maps

Summary of Public Improvements - Opinion of Probable Cost

Location:	Lindsay Acres, Section 14
Engineer:	Claudius Sanchez Czyzewska, PE

Summary	Total
Wastewater Collection Improvements	$0.00
Water Distribution Improvements	$82,823.00
Storm Sewer Improvements	$0.00
Paving Improvements	$186,266.00
Sidewalk Improvements	$0.00
Construction Total	**$269,089.00**

Wastewater Collection - Opinion of Probable Cost

Location: Lindsay Acres, Section 14
Engineer: Claudius Sanchez Czyzewska, PE

Wastewater Main Improvements	Quantity	Unit	Unit Price	Total
12" SDR 35 PVC	0	LF	114.00	0.00
8" SDR 35 PVC	0	LF	76.00	0.00
6" SDR 35 PVC	0	LF	62.00	0.00
Trenching/Backfill 0'-5'	0	LF	24.00	0.00
Length under paved surface:	0	LF		
Trenching/Backfill 5'-8'	0	LF	38.40	0.00
Length under paved surface:	0	LF		
Trenching/Backfill 8'-10'	0	LF	30.00	0.00
Length under paved surface:	0	LF		
Trenching/Backfill 10'-12'	0	LF	36.00	0.00
Length under paved surface:	0	LF		
Trenching 12'-14'	0	LF	42.00	0.00
Length under paved surface:	0	LF		
Imported Backfill Material	0.00	TN	18.00	0.00
Imported Backfill Material - Unit Weight	120.00	PCF		
Replacement Manhole	0	EA	8553.00	0.00
New Manhole	0	EA	6753.00	0.00
Remove Manhole	0	EA	1800.00	0.00
Manhole Extra Depth (MH>5')	0	VF	660.00	0.00
Connect to Existing MH	0	EA	1530.00	0.00
24" Bore & Steel Encasement	0	LF	900.00	0.00
18" Bore & Steel Encasement	0	LF	675.00	0.00
12" Bore & Steel Encasement	0	LF	450.00	0.00
4" Wastewater Service	0	EA	1380.00	0.00
6" Wastewater Service	0	EA	1380.00	0.00
Volume, Flowable Fill (3 Sac)	0.00	CY	126.00	0.00
Length of Flowable Fill (Under Pavmt):	0.00	LF		
Length of Flowable Fill (Other Misc):	0.00	LF		
Depth of Flowable Fill (ft):	2.00	FT		
Construction Subtotal				**$0.00**

Wastewater Collection - Opinion of Probable Cost

Location: Lindsay Acres, Section 14
Engineer: Claudius Sanchez Czyzewska, PE

Wastewater Main Improvements	Quantity	Unit	Unit Price	Total
Construction Subtotal (from prev page)				**$0.00**
Asphalt Pavement Repair	0	SY	60.00	0.00
Concrete Pavement Repair	0	SY	156.00	0.00
Erosion Protection ($/100LF)	0	cLF	600.00	0.00
Trench Protection (Trenching > 5')	0	LF	2.83	0.00
Traffic Control / Job Site Safety	0	cLF	180.00	0.00
Construction Staking ($/100LF)	0	cLF	300.00	0.00
Contingency (nearest $100)	15	%	15%	0.00
Construction Total				**$0.00**
ROW Acquisition	0	LS	1	0.00
Engineering & Surveying	10	LS	10%	0.00
Construction Administration	5	LS	5%	0.00
Engineering & Administration Total				**$0.00**
TOTAL				**$0.00**
$Cost / LF	0	LF		**#DIV/0!**

Water Distribution - Opinion of Probable Cost

Location: Lindsay Acres, Section 14
Engineer: Claudius Sanchez Czyzewska, PE

Water Main Improvements	Quantity	Unit	Unit Price	Total
12" C-900 DR 18	0	LF	76.00	0.00
Length under paved surface:	0	LF		
8" C-900 DR 18	438	LF	68.00	29,811.20
Length under paved surface:	0	LF		
6" C-900 DR 18	0	LF	64.00	0.00
Length under paved surface:	0	LF		
Imported Backfill Material	723.36	TN	18.00	13,020.48
Imported Backfill Material, Unit Weight:	120.00	PCF		
Lower Water Main Under Existing Utliliy	0	EA	1200.00	0.00
16" Tapping Sleeve	0	EA	4740.00	0.00
12" Tapping Sleeve	0	EA	4110.00	0.00
8" Tapping Sleeve	0	EA	3570.00	0.00
6" Tapping Sleeve	0	EA	3150.00	0.00
12" Gate Valve	0	EA	3720.00	0.00
12" Gate Valve (MJ x F)	0	EA	3720.00	0.00
8" Gate Valve	0	EA	2725.00	0.00
8" Gate Valve (MJ x F)	0	EA	2220.00	0.00
6" Gate Valve	0	EA	1830.00	0.00
6" Gate Valve (MJ x F)	0	EA	1200.00	0.00
Fire Hydrant	1	EA	5445.00	5,445.00
Wet Connection	0	EA	3000.00	0.00
Ductile Iron Fittings	0.00	TN	14400.00	0.00
12" Joint Restraint	0	EA	240.00	0.00
8" Joint Restraint	0	EA	180.00	0.00
6" Joint Restraint	0	EA	120.00	0.00
24" Bore & Steel Encasement	0	LF	288.00	0.00
18" Bore & Steel Encasement	0	LF	216.00	0.00
12" Bore & Steel Encasement	0	LF	144.00	0.00
1" Water Service (short)	5	EA	2040.00	10,200.00
1" Water Service (long)	0	EA	2310.00	0.00
2" Water Service (short)	0	EA	3390.00	0.00
2" Water Service (long)	0	EA	3660.00	0.00
Volume, Flowable Fill (3 Sac)	0.00	CY	126.00	0.00
Length of Flowable Fill (Under Pavmt):	0.00	LF		
Length of Flowable Fill (Other Misc):	0.00	LF		
Depth of Flowable Fill (ft):	2.00	FT		
Construction Subtotal				**$58,476.68**

Water Distribution - Opinion of Probable Cost

Location: Lindsay Acres, Section 14
Engineer: Claudius Sanchez Czyzewska, PE

Water Main Improvements	Quantity	Unit	Unit Price	Total
Construction Subtotal (from prev page)				**$58,476.68**
Asphalt Pavement Repair	0	SY	60.00	0.00
Concrete Pavement Repair	0	SY	156.00	0.00
Erosion Protection ($/100LF)	4.384	cLF	600.00	2,630.40
Traffic Control / Job Site Safety ($/100LF)	4.384	cLF	180.00	789.12
Construction Staking ($/100LF)	4.384	cLF	120.00	526.08
Contingency (nearest $100)	15	%	15%	9,400.00
Construction Total				**$71,822.28**
ROW Acquisition	0	LS	1	0.00
Engineering & Surveying	10	LS	10%	7,000.00
Construction Administration	5	LS	5%	4,000.00
Engineering & Administration Total				**$11,000.00**
TOTAL				**$82,823.00**
$Cost / LF	438.4	LF		**188.9210766**

Storm Sewer - Opinion of Probable Cost

Location: Lindsay Acres, Section 14
Engineer: Claudius Sanchez Czyzewska, PE

Wastewater Main Improvements	Quantity	Unit	Unit Price	Total
48" HDPE	0	LF	180.00	0.00
36" HDPE	0	LF	78.00	0.00
30" HDPE	0	LF	64.80	0.00
24" HDPE	0	LF	46.80	0.00
Trenching/Backfill 0'-5'	0	LF	48.00	0.00
Length under paved surface	0	LF		
Trenching/Backfill 5'-8'	0	LF	60.00	0.00
Length under paved surface	0	LF		
Trenching/Backfill 8'-10'	0	LF	84.00	0.00
Length under paved surface	0	LF		
Trenching/Backfill 10'-12'	0	LF	120.00	0.00
Length under paved surface	0	LF		
Trenching/Backfill 12'-14'	0	LF	180.00	0.00
Length under paved surface	0	LF		
Imported Backfill Material	0.00	TN	18.00	0.00
Imported Backfill Material - Unit Weight	120.00	PCF		
Replacement Manhole/Junction Box	0	EA	15000.00	0.00
New Manhole/Junction Box	0	EA	12360.00	0.00
ManholeJunction Box Extra Depth (MH>5')	0	VF	480.00	0.00
Connect to Existing MH/J-Box	0	EA	600.00	0.00
48" Bore & Steel Encasement	0	LF	864.00	0.00
36" Bore & Steel Encasement	0	LF	648.00	0.00
30" Bore & Steel Encasement	0	LF	540.00	0.00
24" Bore & Steel Encasement	0	LF	432.00	0.00
18" Bore & Steel Encasement	0	LF	288.00	0.00
Volume - Flowable Fill (3 Sac)	0.00	CY	126.00	0.00
Length of Flowable Fill (Under Pavmt):	0.00	LF		
Length of Flowable Fill (Other Misc):	0.00	LF		
Depth of Flowable Fill (ft)	2.00	FT		
Construction Subtotal				**$0.00**

Storm Sewer - Opinion of Probable Cost

Location: Lindsay Acres, Section 14
Engineer: Claudius Sanchez Czyzewska, PE

Wastewater Main Improvements	Quantity	Unit	Unit Price	Total
Construction Subtotal (from prev page)				**$0.00**
Asphalt Pavement Repair	0	SY	36.00	0.00
Concrete Pavement Repair	0	SY	156.00	0.00
Erosion Protection ($/100LF)	0	cLF	600.00	0.00
Trench Protection (Trenching > 5')	0	LF	2.40	0.00
Traffic Control / Job Site Safety	0	cLF	180.00	0.00
Construction Staking ($/100LF)	0	cLF	300.00	0.00
Contingency (nearest $100)	15	%	15%	0.00
Construction Total				**$0.00**
ROW Acquisition	0	LS	1	0.00
Engineering & Surveying	10	LS	10%	0.00
Construction Administration	5	LS	5%	0.00
Engineering & Administration Total				**$0.00**
TOTAL				**$0.00**
$Cost / LF	0	LF		**#DIV/0!**

Paving - Opinion of Probable Cost

Location: Lindsay Acres, Section 14
Engineer: Claudius Sanchez Czyzewska, PE

Paving Improvements	Quantity	Unit
Paving Width (back-to-back)	37	FT
Length of Paving	438	FT
Base Rock Depth - Bott Lift (6" min - 8" max)	8	in
Base Rock Depth - Top Lift (5", 6" or 8" max)	8	in
Base Rock Unit Weight (95% Standard Proctor)	120	PCF
Base Rock waste	4	%
HMAC thickness (in)	2	in
HMAC waste	4	%

Paving Improvements	Quantity	Unit	Unit Price	Total
ROW Preparation	438.4	LF	10.80	4,734.72
24" Curb & Gutter	876.8	LF	30.00	26,304.00
Excavation	844.33	CY	24.00	20,263.82
Scarify / Shape / Compact Sub-grade	1899.73	SY	4.20	7,978.88
Base Rock - Bott Lift (Material Only)	711.26	TN	20.25	14,403.02
Base Rock - Top Lift (Material Only)	642.87	TN	20.25	13,018.11
Shape / Compact Base Rock - Bottom Lift	1899.73	SY	4.50	8,548.80
Shape / Compact Base Rock - Top Lift	1607.47	SY	4.50	7,233.60
Tack Coat	1607.47	SY	1.80	2,893.44
HMAC (Material Only & Installation)	183.89	TN	144.00	26,480.76
Erosion Protection ($/100 LF)	4.384	LS	1200.00	5,260.80
Construction Staking ($/100LF)	4.384	LS	600.00	2,630.40
Traffic Control / Job Site Safety ($/100LF)	4.384	LS	300.00	1,315.20
Contingency (nearest $100)	15	%	15%	21,200.00
Construction Total				**$162,265.56**

Paving - Opinion of Probable Cost

Location: Lindsay Acres, Section 14
Engineer: Claudius Sanchez Czyzewska, PE

Paving Improvements	Quantity	Unit	Unit Price	Total
Construction Total (from prev page)				**$162,265.56**
ROW Acquisition	0	LS	1	0.00
Engineering & Surveying	10	LS	10%	16,000.00
Construction Administration	5	LS	5%	8,000.00
Engineering & Administration Total				**$24,000.00**
TOTAL				**$186,266.00**
Developers Share	100%			**$186,266.00**
$Cost / LF	438.4	LF		**424.8768248**

Sidewalk - Opinion of Probable Cost

Location: Lindsay Acres, Section 14
Engineer: Claudius Sanchez Czyzewska, PE

Sidewalk Improvements	Quantity	Unit	Unit Price	Total
Sidewalk Width	0	Ft		
Length of Sidewalk	0	LF		
4" Concrete Sidewalks	0	SF	12.00	0.00
Construction Total				**$0.00**
Engineering & Surveying	5	LS	5%	0.00
Construction Administration	3	LS	3%	0.00
Engineering & Administration Total				**$0.00**
TOTAL				**$0.00**

Ductile Iron Fittings and Joint Restraints - Quantities

Location:	Lindsay Acres, Section 14											
Engineer:	Claudius Sanchez Czyzewska, PE											
Water - Ductile Iron Fittings	Quantity	Wt*	16" JR	12" JR	8" JR	6" JR		Tot Wt.	16" JR	12" JR	8" JR	6" JR
16" x 16" Tee	0	337	3					0	0	0	0	0
16" x 16" Tee (MJ x F)	0	324	2					0	0	0	0	0
16" x 12" Tee	0	277	2	1				0	0	0	0	0
16" x 12" Tee (MJ x F)	0	312	2					0	0	0	0	0
16" x 8" Tee	0	245	2		1			0	0	0	0	0
16" x 8" Tee (MJ x F)	0	248	2					0	0	0	0	0
16" x 6" Tee	0	222	2			1		0	0	0	0	0
16" x 6" Tee (MJ x F)	0	230	2					0	0	0	0	0
12" x 12" Tee	0	171		3				0	0	0	0	0
12" x 12" Tee (MJ x F)	0	198		2				0	0	0	0	0
12" x 8" Tee	0	126		2	1			0	0	0	0	0
12" x 8" Tee (MJ x F)	0	146		2				0	0	0	0	0
12" x 6" Tee	0	119		2		1		0	0	0	0	0
12" x 6" Tee (MJ x F)	0	133		2				0	0	0	0	0
8" x 8" Tee	0	90			3			0	0	0	0	0
8" x 8" Tee (MJ x F)	0	101			2			0	0	0	0	0
8" x 6" Tee	0	79			2	1		0	0	0	0	0
8" x 6" Tee (MJ x F)	0	81			2			0	0	0	0	0
6" x 6" Tee	0	66				3		0	0	0	0	0
6" x 6" Tee (MJ x F)	0	68				2		0	0	0	0	0
12" 90	0	129		2				0	0	0	0	0
8" 90	0	64			2			0	0	0	0	0
6" 90	0	49				2		0	0	0	0	0
12" 45	0	102		2				0	0	0	0	0
8" 45	0	56			2			0	0	0	0	0
6" 45	0	39				2		0	0	0	0	0
12" 22.5	0	87		2				0	0	0	0	0
8" 22.5	0	50			2			0	0	0	0	0
6" 22.5	0	31				2		0	0	0	0	0
16" x 12" Reducer	0	120	1	1				0	0	0	0	0
16" x 8" Reducer	0	136	1		1			0	0	0	0	0
16" x 6" Reducer	0	132	1			1		0	0	0	0	0
12" x 8" Reducer	0	57		1	1			0	0	0	0	0
12" x 6" Reducer	0	64		1		1		0	0	0	0	0
8" x 6" Reducer	0	39			1	1		0	0	0	0	0
12" End Cap	0	46		1				0	0	0	0	0
8" End Cap	0	26			1			0	0	0	0	0
6" End Cap	0	18				1		0	0	0	0	0
16" Butterfly Valvae	0		2					0	0	0	0	0
16" Butterfly Valve (MJ x F)	0		1					0	0	0	0	0
12" Gate Valve	0			2				0	0	0	0	0
12" Gate Valve (MJ x F)	0			1				0	0	0	0	0
8" Gate Valve	0				2			0	0	0	0	0
8" Gate Valve (MJ x F)	0				1			0	0	0	0	0
6" Gate Valve	0					2		0	0	0	0	0
6" Gate Valve (MJ x F)	0					1		0	0	0	0	0
Fire Hydrant	0					1		0	0	0	0	0
								DI Fittings	**16" JR**	**12" JR**	**8" JR**	**6" JR**
Total							**lbs**	0	0	0	0	0
							TONS	0.00				
* Tyler Union - Quality Waterworks Products (PC-U2008, February, 2008)												

PRELIMINARY PLAT

LINDSAY ACRES

SECTION 14

A REPLAT OF THE WEST 608.00 FEETOF THE NORTH 134.4 FEET OF TRACT 6, LINDSAY ACRES ADDITION, CITY AND COUNTY OF MIDLAND, TEXAS.

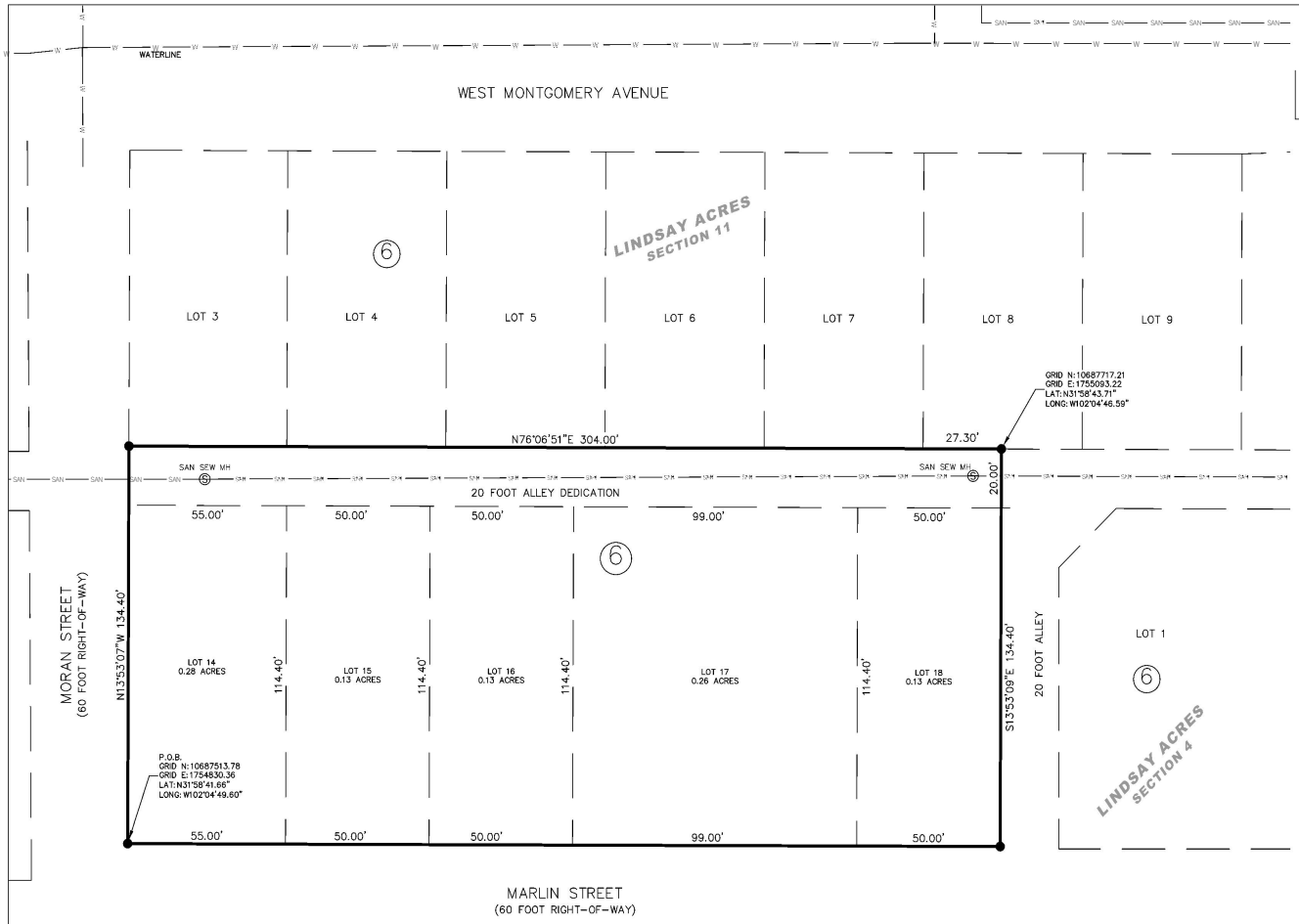

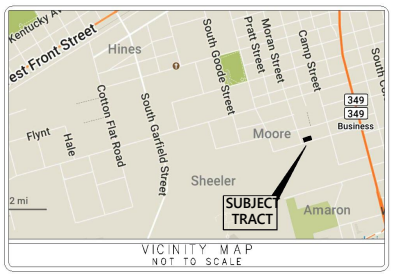

VICINITY MAP
NOT TO SCALE

GRAPHIC SCALE
0 30 60
(1 INCH = 30' FEET)

LEGEND:

- MONUMENT AS DESCRIBED
- PROPERTY LINE
- ADJOINING PROPERTIES

STATE OF TEXAS §
COUNTY OF MIDLAND §

WHEREAS, I AM THE RECORD OWNER(S) OF A TRACT OF LAND SITUATED IN THE NORTH/SOUTH PART/QUARTER OF SECTION 3, BLOCK 39, T-2-S, T & P, RR CO. SURVEY, MIDLAND COUNTY, TEXAS, AND MORE PARTICULARLY DESCRIBED HEREON.

FIELD NOTE DESCRIPTION OF A 0.94 ACRE TRACT OF LAND, OUT OF THE EAST PART OF SECTION 3, BLOCK 39, T-2-S, T & P, RR CO. SURVEY, MIDLAND COUNTY, TEXAS. SAID 0.94 ACRE TRACT DESCRIBED MORE FULLY BY METES AND BOUNDS AS FOLLOWS:

BEGINNING AT (N:10687513.78, E:1754830.36) A REINF BAR SET IN THE NORTH RIGHT OF WAY OF MARLIN STREET AND THE EAST RIGHT OF WAY OF MORAN STREET FOR THE SOUTHWEST CORNER OF TRACT SIX OF THE REPLAT OF LINDSAY ACRES AS RECORDED IN VOLUME 93, PAGE 34, DEED RECORDS OF MIDLAND COUNTY, TEXAS, ALSO BEING THE SOUTHWEST CORNER OF THIS TRACT;

THENCE NORTH 13°53'07" WEST, 134.40 FEET TO A REINF BAR SET FOUND FOR THE NORTHWEST CORNER OF THIS TRACT;

THENCE NORTH 76°06'53" EAST, 304.00 FEET TO A REINF BAT SET FOUND FOR THE NORTHEAST CORNER OF THIS TRACT;

THENCE NORTH 13°53'07" EAST, 134.40 FEET TO A REINF BAR SET IN THE NORTH RIGHT OF WAY OF MARLIN STREET FOR THE SOUTHEAST CORNER OF THIS TRACT;

THENCE SOUTH 76°06'53" WEST, 304..00 FEET TO THE PLACE OF BEGINNING.

NOW, THEREFORE, KNOW ALL MEN BY THESE PRESENTS:

THAT I DO HEREBY ADOPT THIS PLAT DESIGNATING THE HEREINABOVE DESCRIBED PROPERTY AS LINDSAY ACRES SECTION 14, AN ADDITION TO THE CITY OF MIDLAND, AND DO HEREBY DEDICATE TO THE PUBLIC USE FOREVER THE STREETS, ALLEY, AND EASEMENTS, (AND PARKWAYS) SHOWN HEREON.

WITNESS MY HAND AT MIDLAND, TEXAS, THIS ____ DAY OF _____, 2022.

_____
DANIEL LIRA

STATE OF TEXAS §
COUNTY OF MIDLAND §

THIS INSTRUMENT WAS ACKNOWLEDGED BEFORE ME ON THIS _____ DAY OF _____, 2022, BY DANIEL LIRA.

_____
NOTARY PUBLIC
MIDLAND COUNTY, TEXAS

STATE OF TEXAS §
COUNTY OF MIDLAND §

THIS INSTRUMENT WAS ACKNOWLEDGED BEFORE ME ON THIS _____ DAY OF _____, 2022, BY OWNER NAME 2.

_____
NOTARY PUBLIC
MIDLAND COUNTY, TEXAS

OWNER:

DANIEL LIRA,
607 MARLIN STREET,
MIDLAND, TX 79701

Texas 811
Know what's below. Call before you dig.

CERTIFICATE OF APPROVAL

FOR APPROVAL BY THE DIRECTOR OF DEVELOPMENT SERVICES:

THIS IS TO CERTIFY THAT THE ABOVE AND FOREGOING PLAT OF LINDSAY ACRES, SECTION 14, WAS APPROVED BY PROPER ACTION OF THE CITY PLANNING AND ZONING COMMISSION OF THE CITY OF MIDLAND, ON THIS ___ DAY OF _____, 2022.

SIGNED: _____
CHAIRMAN LUCY SISNIEGA

ATTEST: _____
SECRETARY ELIZABETH SHAUGHNESSY

PLAT FILED FOR RECORD
MIDLAND COUNTY, TEXAS
NO. _____ CABINET ____
DATE _____ PAGE _____

THIS PLAT HAS BEEN CHECKED FOR ACCESSIBILITY OF UTILITIES:

SIGNED: _____
ONCOR ELECTRIC DELIVER COMPANY

SIGNED: _____
AT&T TEXAS

SIGNED: _____
ATMOS ENERGY

SIGNED: _____
SUDDENLINK COMMUNICATIONS

SIGNED: _____
GRANDE COMMUNICATIONS

NOTES:

1. BEARINGS, DISTANCES AND ACREAGE SHOWN ARE BASED ON GPS OBSERVATIONS AND CONFORM TO THE "TEXAS COORDINATE SYSTEM" TEXAS CENTRAL ZONE, NORTH AMERICAN DATUM OF 1983.

2. MONUMENTS ARE A 1/2 INCH REINFORCING BAR SET WITH YELLOW PLASTIC CAP STAMPED "SCHUMANN ENGINEERING" UNLESS OTHERWISE NOTED.

3. SELLING A PORTION OF THIS ADDITION BY METES AND BOUNDS MAY BE A VIOLATION OF CITY ORDINANCE AND STATE LAW AND SUBJECT TO FINES AND WITHHOLDING OF UTILITIES AND BUILDING PERMITS.

4. APPROVAL OF A SITE PLAN BY THE CITY OF MIDLAND MAY BE REQUIRED BEFORE THE DEVELOPMENT OF ANY LOT AND BEFORE A BUILDING PERMIT MAY BE OBTAINED.

5. INITIAL IMPACT FEES WILL BE ASSESSED DURING THE FINAL PLATTING PROCESS. IMPLEMENTATION AND COLLECTION OF IMPACT FEES WILL TAKE PLACE DURING THE BUILDING PERMIT PROCESS. ADDITIONAL IMPACT FEES OR INCREASE OF FEES MAY NOT BE ASSESSED AGAINST THE TRACT UNLESS THE NUMBER OF SERVICE UNITS TO BE DEVELOPED ON THE TRACT INCREASES.

6. THE INSTALLATION OF PUBLIC IMPROVEMENTS MAY BE REQUIRED BY THE CITY OF MIDLAND AS SUCH TIME AS: (1) A PLAT IS RE-PLATTED FOR SUBDIVISION INTO MORE THAN ONE TRACT OR (2) THE PROPERTY IS REZONED FOR A MORE INTENSIVE USE.

7. THIS PROPERTY IS IN FEMA'S FLOOD INSURANCE RATE MAP NO. 48329C0202F, EFFECTIVE DATE, SEPTEMBER 16, 2005, ALL OF TRACT IS IN ZONE "X" AND NOT IN A SPECIAL FLOOD HAZARD AREA.

THAT I, RJ DAUM, A REGISTERED PROFESSIONAL LAND SURVEYOR, DO HEREBY CERTIFY THAT I PREPARED THIS PLAT FROM AN ACTUAL AND ACCURATE SURVEY OF THE LAND AND THAT THE CORNER MONUMENTS SHOWN THEREON WERE PROPERLY PLACED UNDER MY PERSONAL SUPERVISION, IN ACCORDANCE WITH THE SUBDIVISION REGULATIONS OF THE CITY OF MIDLAND, TEXAS.

"THIS DOCUMENT IS RELEASED FOR THE PURPOSE OF INTERIM REVIEW AND MARK-UP UNDER THE AUTHORITY OF RJ DAUM, RPLS 4826, ON AUGUST 26TH, 2022. IT IS NOT TO BE USED FOR CONSTRUCTION, BIDDING, PERMIT OR RECORDING PURPOSES."

_____
RJ DAUM
TEXAS RPLS 4826

NO.	DATE	DESCRIPTION	BY
2	08/26/2022	PRELIMINARY PLAT	JD

DRAWN BY: JD DATE: 08/26/2022
CHECKED BY: ED/RJ PROJECT NO.: 78786
JOB NO.: 78,786 SHEET: 1 OF 1

SCHUMANN ENGINEERING CO.
A LATERAL LAND COMPANY
CIVIL ENGINEERING - LAND SURVEYING
TEXAS FIRM No. F1880 - TEXAS FIRM No. 10149500
800 N. MARIENFELD ST. #100
MIDLAND, TEXAS 79701 (432) 684-5548

PACKET 24.23 July 11, 2023

LINDSAY ACRES, SECTION 14

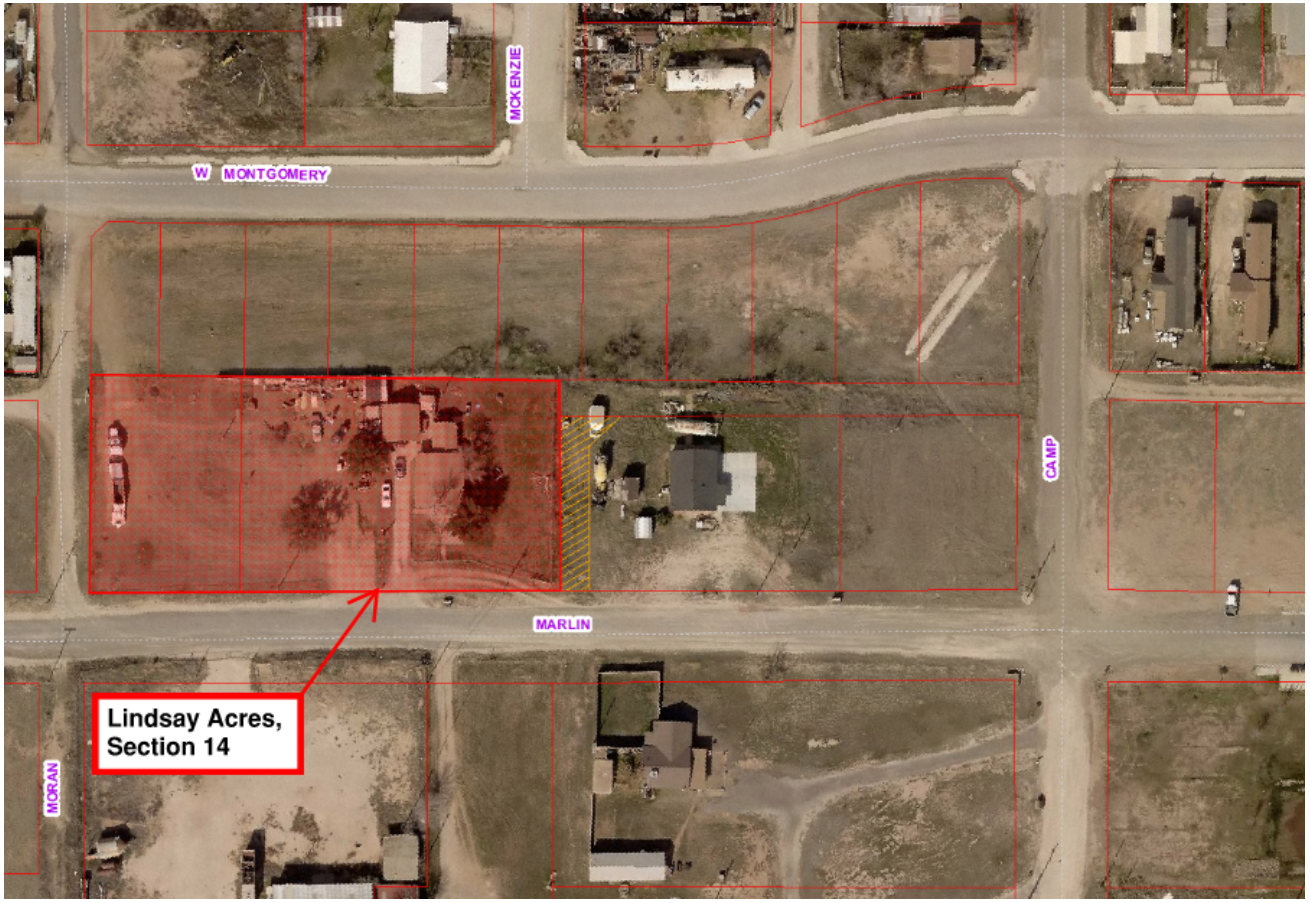

ENGINEERING DIVISION

REQUEST TO

DEFER

Water & Paving

NORTH

Lindsay Acres, Section 14

Deferral Request

(Magrym Engineering)

MIDLAND Engineering Services

Made by AHA 03/03/2022

City of Midland

Office Memorandum

DATE: July 5, 2023

TO: The Honorable Mayor and City Council Members

FROM: John Ohnemiller, City Attorney

SUBJECT: Motion appointing Mr. Tomas Gonzalez as the new City Manager of the City of Midland effective July 31, 2023; and authorizing the Mayor to execute an employment agreement between the City of Midland and the City Manager.

The proposed motion would appoint Mr. Tomas Gonzalez as the new City Manager of the City of Midland effective July 31, 2023. The motion also authorizes the Mayor to execute, on behalf of the City of Midland, an employment agreement with Mr. Gonzalez.

If you have any questions regarding this matter, please do not hesitate to contact me.